ภาคผนวก ข.43

ระเบียบข้อบังคับเกี่ยวกับวิธีการปฏิบัติงานในการใช้หม้อไอน้ำ

OPERATION
&
MAINTENANCE MANUAL

For

Vogt Power International Inc.
Heat Recovery Steam Generators

For

ABPR5 Combined Cycle Cogeneration Plant Project
Amata B. Grimm Power (Rayong) 5 Limited

Vogt Power Project No. 17491

Vogt Power Document No. V17491-OMNE-001

VOLUME 1

OPERATION & MAINTENANCE MANUAL

For

Vogt Power International, Inc.
Heat Recovery Steam Generators

for

Amata B. Grimm Power (Rayong) 5 Limited
ABPR5 Combined Cycle Cogeneration Plant Project

Vogt Power Project No. 17491

Vogt Power Document No. V17491-OMNE-001

Written By: Poonsap Homniyom

Reviewed By:

Revision: 00
Date: 24 Apr 2017

The purpose of this manual is to suggest procedures for the operation and maintenance of the HRSG and its subsidiary parts. This guide does not cover all variations in equipment, nor does it provide for every possible requirement or contingency. The specific site conditions, staffing, accessibility, and interfacing equipment must be considered when implementing the information provided herein.

Refer to the Vogt Power International Erection Manual for specific information concerning unloading, storage, and installation of the equipment. Refer to the Vogt Power International Training Manual for operator training. Should other information be desired, or particular situations arise that are not addressed in this manual, the matter should be referred to Vogt Power International.

This manual describes the HRSG, its components and ancillaries to aid the Owner in its development of appropriate procedures for operating and maintaining the equipment. It also contains specific design and performance information, including drawings, equipment lists, and data sheets, purely for convenience. However, this document is not contractual, and should not be referred to in contractual matters.

This document contains minimum procedures for operating and maintaining the HRSG components and is intended to assist the operators in planning and scheduling operational and maintenance activities. It is not intended to and does not cover all details or variations in equipment, or provide for every possible contingency.

INDEX

VOLUME 1 – Vogt Power HRSG O&M Manual

SECTION I DESIGN DATA

Tab 1 - Drawing and Document List
Tab 2 - System Design Description
Tab 3 - Safety Valve Data
Tab 4 - Performance Data
Tab 5 - Start-up Procedure
Tab 6 - Gas Side Pressure Drop
Tab 7 - Heating Surface Data
Tab 8 - Boiler Feedwater and Boiler Water
Tab 9 - Performance Prediction

SECTION II OPERATIONAL PROCEDURES

Tab 1 - Safety Precautions
Tab 2 - Suggested Operational Procedure
Tab 3 - Removal from Service, Lay-up, and Long Term Storage
Tab 4 - Tube Failure Analysis
Tab 5 - Troubleshooting Procedures
Tab 6 - Maintenance Checklists
Tab 7 - Pressure Part Life
Tab 8 - Warranty, Inspection and Maintenance Reports and Forms

SECTION III COMMISSIONING PROCEDURES

Tab 1 - Preliminary Filling and Flushing
Tab 2 - Hydrostatic Test
Tab 3 - Alkaline Boilout
Tab 4 - Chemical Cleaning
Tab 5 - Steam Blow Cleaning
Tab 6 - Commissioning

SECTION IV SUBVENDOR MANUALS

Volume 2 – Divert Damper

Volume 3 – Valves and Inline Components

Tab 1 - Control Valves
Tab 2 - Safety Valves
Tab 3 - General Service Valves
Tab 4 - Actuators for General Service Valves
Tab 5 - Strainers
Tab 6 - Steam Sample Nozzles
Tab 7 - Instrument Valves
Tab 8 - Attemperators

Volume 4 – Instrumentation

Tab 1 - Transmitters
Tab 2 Level Gauges and Remote Level indicators
Tab 3 - Thermocouples & Temperature Indicators
Tab 4 - Pressure Gauges and DP Gauges

Volume 5 – Deaerator & Heat Exchanger

Tab 1 - Deaerator

Volume 6 – Miscellaneous Equipment

Tab 1 - Outlet Expansion Joints
Tab 2 - Inlet Expansion Joints
Tab 3 - Steam Silencers
Tab 4 - Pipe Supports
Tab 5 - Flow Elements
Tab 6 - Aircraft Warning Lights
Tab 7 - Stack Silencers

1.0 DRAWING AND DOCUMENT LIST

1.1. Drawing List

V17491-EBND-200	Steam Drum Manway Gasket Installation & Bolting Procedure
V17491-FLND-001	HRSG Foundation Diagram
V17491-GAND-001	General Arrangement – Right Side Elevation
V17491-GAND-002	General Arrangement – Left Side Elevation
V17491-GAND-003	General Arrangement – Plan View
V17491-ICND-001	P&ID Legend and General Notes
V17491-ICND-002	Flue Gas P&ID
V17491-ICND-003	High Pressure P&ID
V17491-ICND-004	Low Pressure P&ID
V17491-ICND-005	DA, Storage Tank, and Heat Exchanger P&ID
V17491-ICND-006	Blowdown, Silencers, PSV Vents & Drains P&ID
V17491-SEND-001	Boiler Setting – Right Side Sectional Elevation & Section A
V17491-SEND-002	Boiler Setting – Section “A” and “B”
V17491-SEND-003	Boiler Setting – Plan View

1.2 Document List

V17491-ICNA-001	Line List
V17491-ICNA-002	Terminal Point List
V17491-ICNA-003	Valve List
V17491-ICNA-004	Instrument List
V17491-SENF-001	General Notes and Data

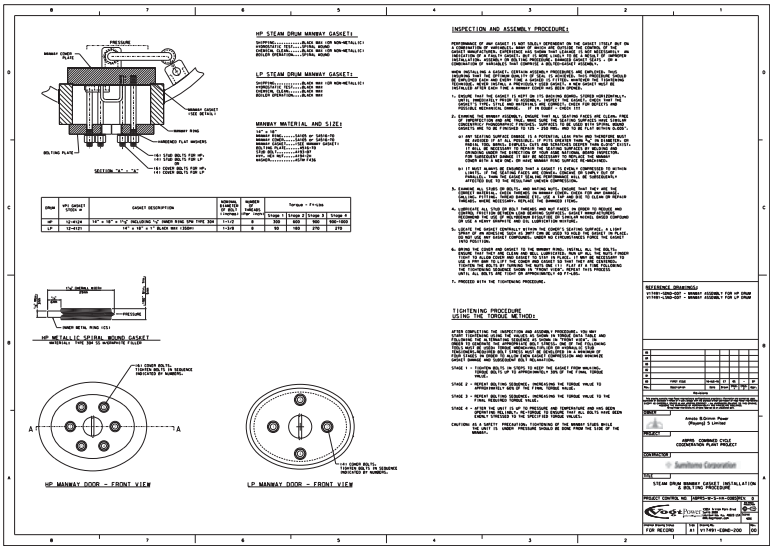

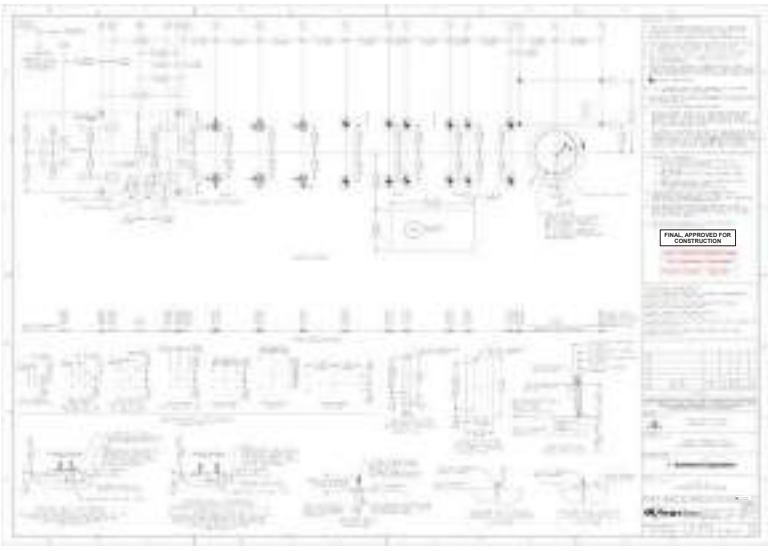

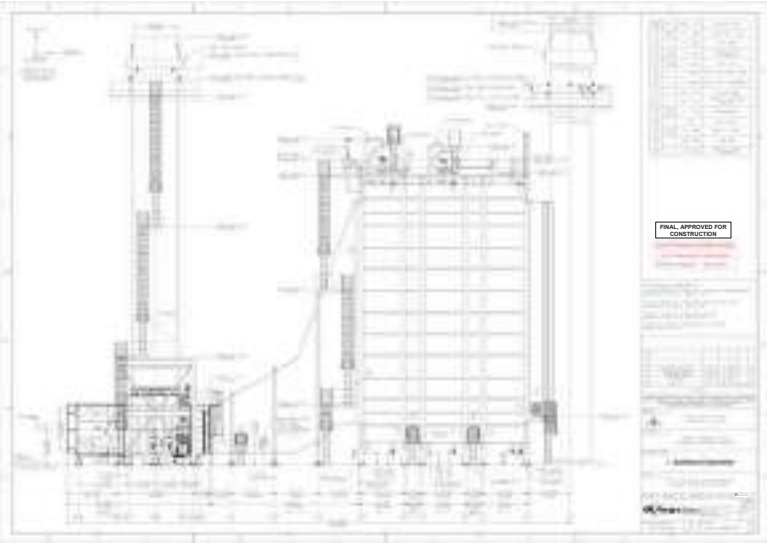
FINAL, APPROVED FOR CONSTRUCTION

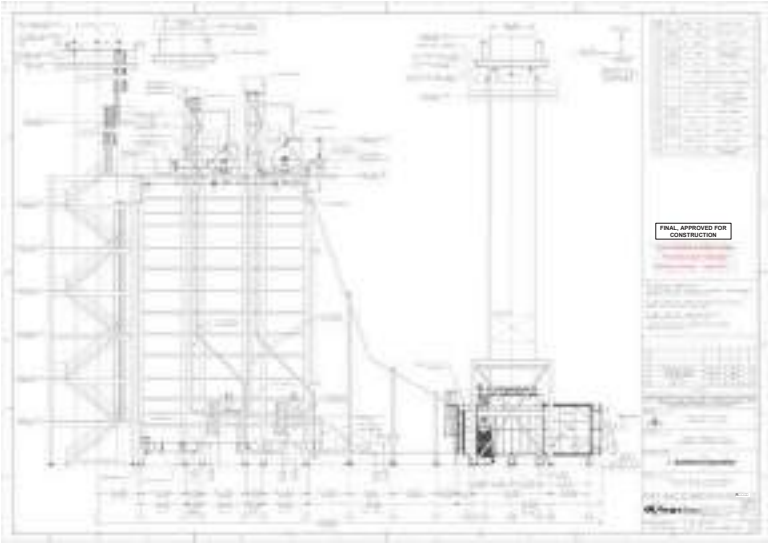
FINAL, APPROVED FOR CONSTRUCTION

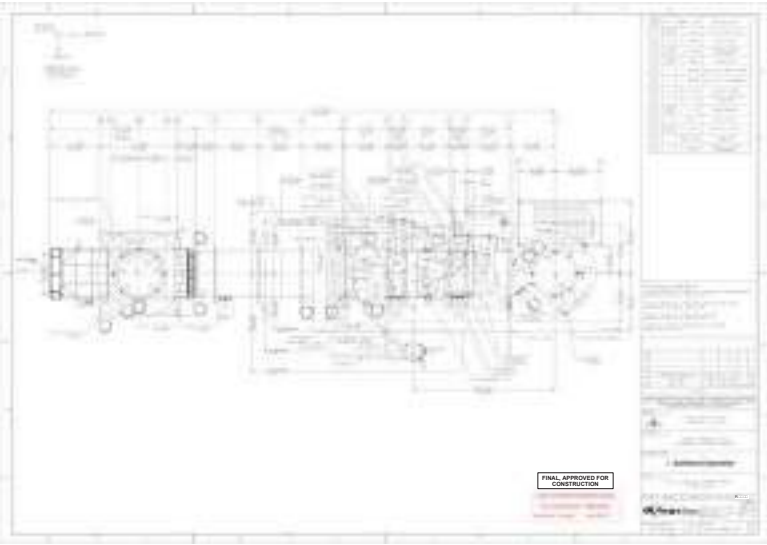
FINAL, APPROVED FOR CONSTRUCTION

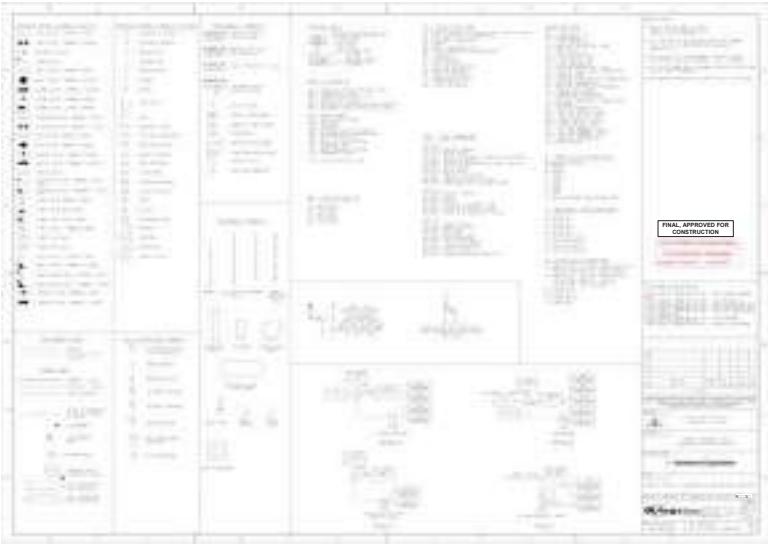
FINAL, APPROVED FOR CONSTRUCTION

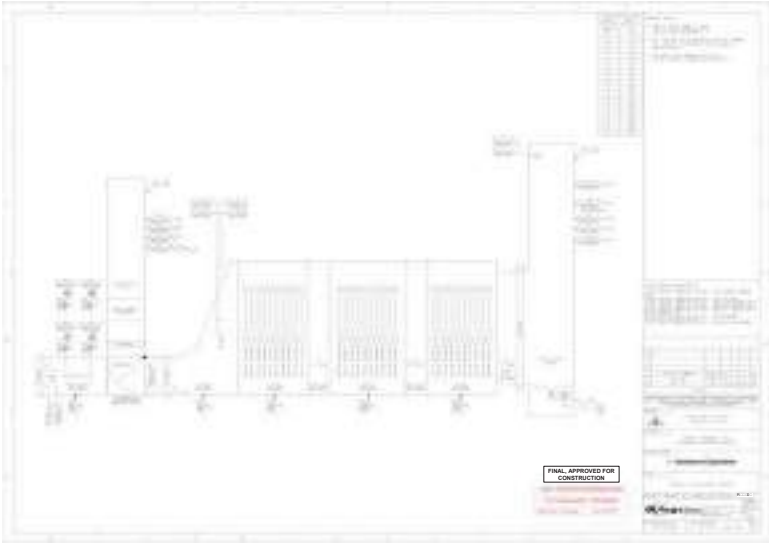
FINAL, APPROVED FOR CONSTRUCTION

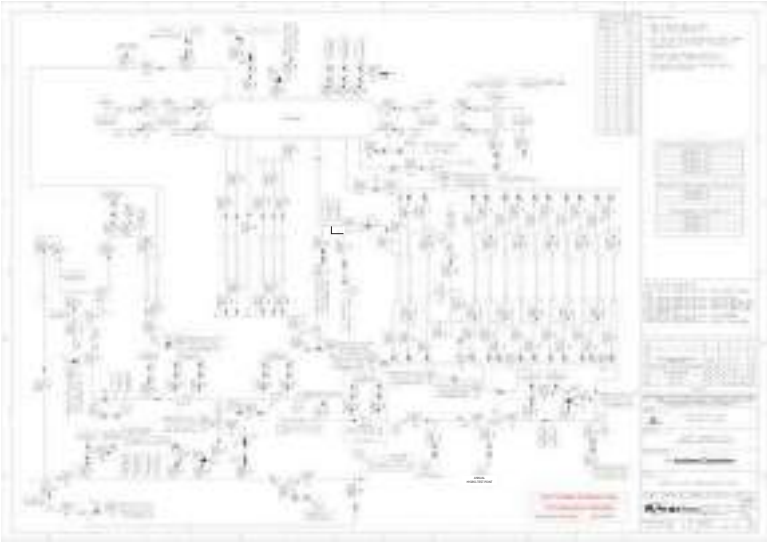

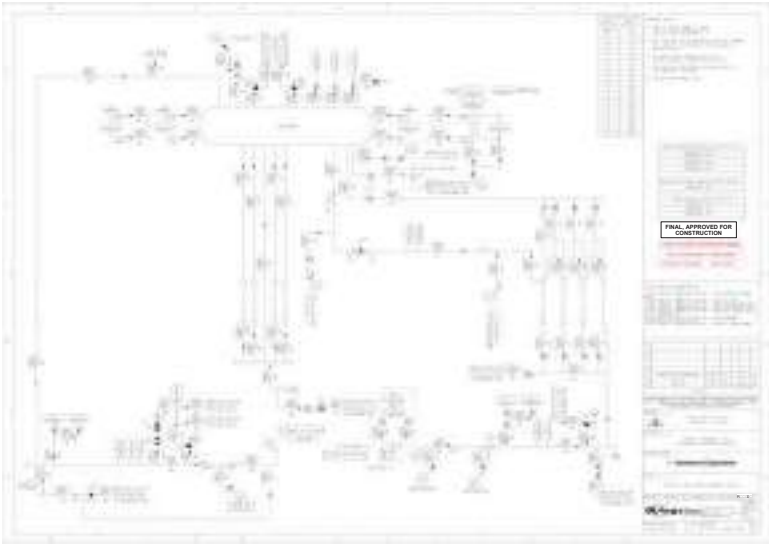
FINAL, APPROVED FOR CONSTRUCTION

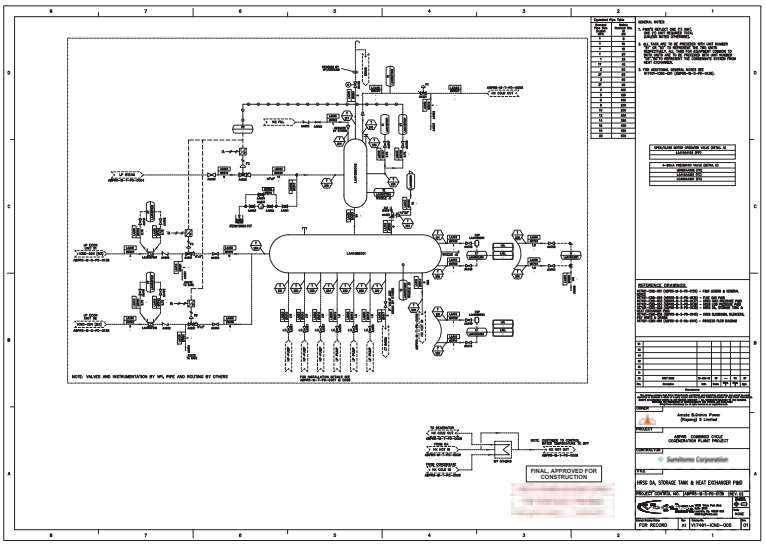
FINAL, APPROVED FOR CONSTRUCTION
Sumitomo Corporation
HRSG DA, STORAGE TANK & HEAT EXCHANGER P&ID
FOR RECORD

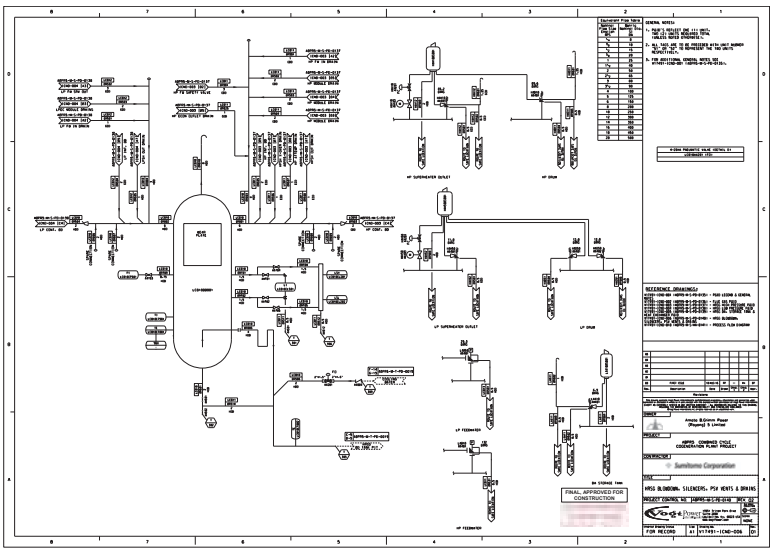
GENERAL NOTES:
REFERENCE DRAWINGS:
HRSG BLOWDOWN, SILENCERS, PSV VENTS & DRAINS
FINAL APPROVED FOR CONSTRUCTION
FOR RECORD

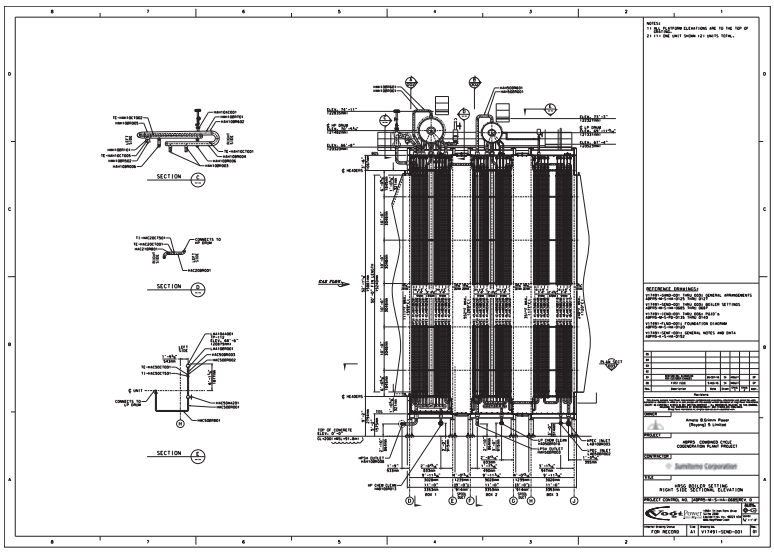
SECTION
SECTION
SECTION
REFERENCE DRAWINGS:
FOR RECORD

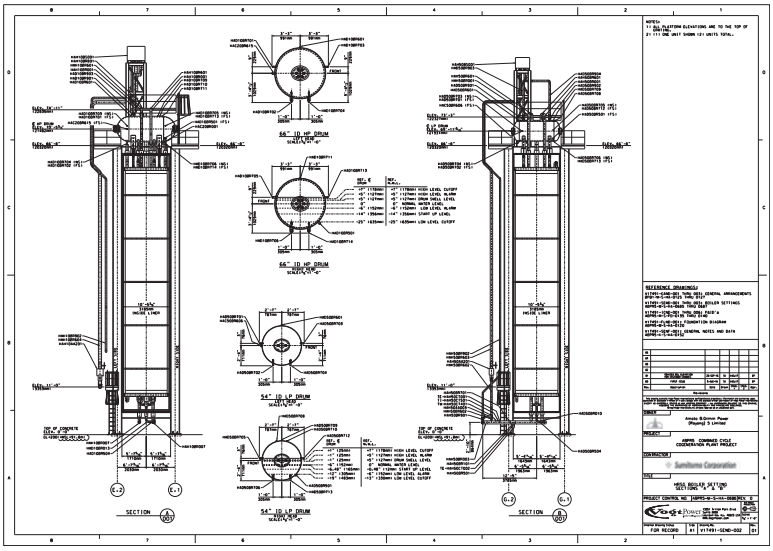
SECTION
SECTION
REFERENCE DRAWINGS:
FOR RECORD

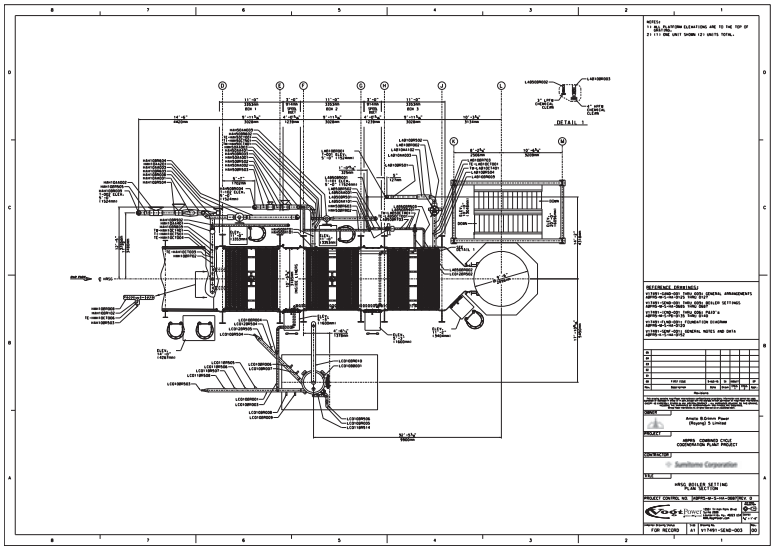
DETAIL 1
REFERENCE DRAWINGS:
FOR RECORD

LINE LIST

For

ABPR5 Combined Cycle Cogeneration Plant Project

For

Vogt Power International Job 17491

Amata B.Grimm Power (Rayong) 5 Limited

Vogt Power Document No. V17491-ICNA-001

PREPARED BY: Rattiya Pimchaichon Product Engineer

REVIEWED BY: Poonsap Homniyom Project Engineer

REVIEWED BY: Matt Kreis Director of Engineering

Rev.	Date	Engineer	Comments
0	26 Aug 2016	R. Pimchaichon	Initial Issue
1	18 Jan 2017	R. Pimchaichon	Updated for Relocation of Fuel Gas Preheater Extraction

OWNER	Amata B.Grimm Power (Rayong) 5 Limited
PROJECT	ABPR5 Combined Cycle Cogeneration Plant Project
CONTRACTOR	Sumitomo Corporation
TITLE	HRSG LINE LIST
PROJECT CONTROL NO.	ABPR5-K-S-HA-1001 REV. 00

1.0. DESCRIPTION OF LINE DESIGNATIONS

Note: Line Number correlates to P&ID V17491-ICND-002 through 006

1.1 Line Number

All tags are to be preceded with unit number "51" or "52" to represent the two units respectively, "05" for the deaerator system, and "50" for the condensate system.

AAA = SYSTEM ID

GCQ = Injection System For Main Fluid
HAC = Economizer System
HAD = Drum / Evaporator System
HAH = Superheater System
HAN = Pressure System Drainage and Venting
HNA = Ductwork System (Exhaust Gas Side of HRSG)
HNB = Bypass Damper
HNE = HRSG Exhaust Stack
LAA = Deaerator
LAB = Feedwater
LAC = Feedwater Pumps & Heat Exchanger
LAE = Attemperator (Desuperheater)
LBA = Main Steam Piping
LBG = Auxiliary Steam Piping
LBH = Blowdown Tank
LCA = Main Condensate Piping
LCQ = Blowdown System
PGA = Cooling Water System

BB = SUB SYSTEM ID

10 = HP System
20 = HP System
30 = Not Used
40 = Not Used
50 = LP System

CC = ITEM TYPE CODE

AA = Valves
AC = Heat Exchanger / Attemperator
AT = Strainer / Separator
AP = Pumps
BB = Drum / Condensate Pots
BR = Lines
BS = Silencers
BU = Burner
CF = Flow Devices
CL = Level Devices
CG = Position Measurement
CP = Pressure Devices
CQ = Quality Variables
CT = Temperature Devices
CY = Vibration Devices

DDD = ITEM NUMBERING

"BR" Piping
001-499 = Piping (Generally)
501-599 = Drains
601-699 = Vents
701-799 = Internal Instruments Lines
801-899 = Sampling & Dosing Piping
901-999 = Lines To & From Safety Valves

X = Pressure Class Identifier

A = 4500#
B = 2500#
C = 1500#
D = 900#
E = 600#
G = 300#
H = 150#
X = No Class Required (Non Pressure Part)

Y = Material Type Identifier

A = SA-335 P-91
B = SA-335 P-22
C = SA-335 P-11
D = SA-106 Grade B
E = SA-106 Grade C
G = A-312 Type 316 SS
H = A-312 Type 316H SS
J = A-312 Type 304 SS
K = A-312 Type 304H SS

Z = Code Class Identifier

K = ASME Section I (Section I Jurisdiction/Tech - Boiler Proper)
H = ASME Section I (includes Section I Jurisdiction/ASME B31.1 Tech. - Boiler External Piping)
D = ASME B31.1
M = ASME Section VIII
T = ASME B31.3
X = Non-Code/Non Pressure Retaining

1.2 Small Bore Piping Schedules

Small bore piping schedules are based on design pressure and temperature, manufacturing tolerance of 12.5%, fabrication using socket weld fittings (no bending) and no corrosion allowance.

1.3 Insulation

Insulation thickness and material (Calcium Silicate) are based on VPI standard insulation charts.

Line_Tag	Service	Size (DN)	Size (NPS)	Schedule	Spec	ANSI_Class	Pipe_Matl	Sys	D_Press (Bar)	D_Temp (C)	D_Press (PSIG)	D_Temp (F)	Insul Thk (mm)	Insul Thk (in)	Customer's PID No.	VPI PID's No.	Notes
HAC20BR001	HPEC OUTLET TO DRUM	150	6	80	DDH	900#	SA-106 GR.B	HP	108	304	1565	579	76	3	ABPR5-M-S-PD-0137	V17491-ICND-003	
HAC20BR002	HPEC 2-1 XOVER	125	5	80	CDK	1500#	SA-106 GR.B	HP	132	333	1910	631	0	0	ABPR5-M-S-PD-0137	V17491-ICND-003	
HAC20BR003	HPEC 3-2 XOVER	125	5	80	CDK	1500#	SA-106 GR.B	HP	132	333	1910	631	0	0	ABPR5-M-S-PD-0137	V17491-ICND-003	
HAC20BR004	HPEC 4-3 XOVER	125	5	80	CDK	1500#	SA-106 GR.B	HP	132	333	1910	631	0	0	ABPR5-M-S-PD-0137	V17491-ICND-003	
HAC20BR005	HPEC 5-4 XOVER	125	5	80	CDK	1500#	SA-106 GR.B	HP	132	333	1910	631	0	0	ABPR5-M-S-PD-0137	V17491-ICND-003	
HAC20BR006	HPEC 6-5 XOVER	125	5	80	CDK	1500#	SA-106 GR.B	HP	132	333	1910	631	0	0	ABPR5-M-S-PD-0137	V17491-ICND-003	
HAC20BR007	HPEC 7-6 XOVER	125	5	80	CDK	1500#	SA-106 GR.B	HP	132	333	1910	631	0	0	ABPR5-M-S-PD-0137	V17491-ICND-003	
HAC20BR008	HPEC 8-7 XOVER	125	5	80	CDK	1500#	SA-106 GR.B	HP	132	333	1910	631	0	0	ABPR5-M-S-PD-0137	V17491-ICND-003	
HAC20BR009	HPEC 9-8 XOVER	125	5	80	CDK	1500#	SA-106 GR.B	HP	132	333	1910	631	0	0	ABPR5-M-S-PD-0137	V17491-ICND-003	
HAC20BR010	HPEC A-9 XOVER	125	5	80	CDK	1500#	SA-106 GR.B	HP	132	333	1910	631	0	0	ABPR5-M-S-PD-0137	V17491-ICND-003	
HAC20BR011	HPEC B-A XOVER	125	5	80	CDK	1500#	SA-106 GR.B	HP	132	333	1910	631	0	0	ABPR5-M-S-PD-0137	V17491-ICND-003	
HAC20BR012	HPEC C-B XOVER	125	5	80	CDK	1500#	SA-106 GR.B	HP	132	333	1910	631	0	0	ABPR5-M-S-PD-0137	V17491-ICND-003	
HAC20BR013	HPEC D-C XOVER	125	5	80	CDK	1500#	SA-106 GR.B	HP	132	333	1910	631	0	0	ABPR5-M-S-PD-0137	V17491-ICND-003	
HAC20BR014	HPEC OUTLET	150	6	80	CDH	1500#	SA-106 GR.B	HP	132	333	1910	631	76	3	ABPR5-M-S-PD-0137	V17491-ICND-003	
HAC20BR024	**FUEL GAS PREHEATER**	**25**	**1**	**80**	**CDH**	**1500#**	**SA-106 GR.B**	**HP**	**132**	**333**	**1910**	**631**	**64**	**2.5**	**ABPR5-M-S-PD-0137**	**V17491-ICND-003**	
HAC20BR025	FUEL GAS PREHEATER	50	2	80	CDH	1500#	SA-106 GR.B	HP	132	333	1910	631	64	2.5	ABPR5-M-S-PD-0137	V17491-ICND-003	
HAC20BR501	HPEC DRAIN	25	1	80	CDH	1500#	SA-106 GR.B	HP	132	333	1910	631	64	2.5	ABPR5-M-S-PD-0137	V17491-ICND-003	
HAC20BR502	HPEC DRAIN	25	1	80	CDH	1500#	SA-106 GR.B	HP	132	333	1910	631	64	2.5	ABPR5-M-S-PD-0137	V17491-ICND-003	
HAC20BR503	HPEC DRAIN	25	1	80	CDH	1500#	SA-106 GR.B	HP	132	333	1910	631	64	2.5	ABPR5-M-S-PD-0137	V17491-ICND-003	
HAC20BR504	HPEC DRAIN	25	1	80	CDH	1500#	SA-106 GR.B	HP	132	333	1910	631	64	2.5	ABPR5-M-S-PD-0137	V17491-ICND-003	
HAC20BR505	HPEC DRAIN	25	1	80	CDH	1500#	SA-106 GR.B	HP	132	333	1910	631	64	2.5	ABPR5-M-S-PD-0137	V17491-ICND-003	
HAC20BR506	HPEC DRAIN	25	1	80	CDH	1500#	SA-106 GR.B	HP	132	333	1910	631	64	2.5	ABPR5-M-S-PD-0137	V17491-ICND-003	
HAC20BR507	HPEC DRAIN	25	1	80	CDH	1500#	SA-106 GR.B	HP	132	333	1910	631	64	2.5	ABPR5-M-S-PD-0137	V17491-ICND-003	
HAC20BR508	HPEC DRAIN	25	1	80	CDH	1500#	SA-106 GR.B	HP	132	333	1910	631	64	2.5	ABPR5-M-S-PD-0137	V17491-ICND-003	
HAC20BR509	HPEC DRAIN	25	1	80	CDH	1500#	SA-106 GR.B	HP	132	333	1910	631	64	2.5	ABPR5-M-S-PD-0137	V17491-ICND-003	
HAC20BR510	HPEC DRAIN	25	1	80	CDH	1500#	SA-106 GR.B	HP	132	333	1910	631	64	2.5	ABPR5-M-S-PD-0137	V17491-ICND-003	
HAC20BR511	HPEC DRAIN	25	1	80	CDH	1500#	SA-106 GR.B	HP	132	333	1910	631	64	2.5	ABPR5-M-S-PD-0137	V17491-ICND-003	
HAC20BR512	HPEC DRAIN	25	1	80	CDH	1500#	SA-106 GR.B	HP	132	333	1910	631	64	2.5	ABPR5-M-S-PD-0137	V17491-ICND-003	
HAC20BR513	HPEC DRAIN	25	1	80	CDH	1500#	SA-106 GR.B	HP	132	333	1910	631	64	2.5	ABPR5-M-S-PD-0137	V17491-ICND-003	
HAC20BR514	HPEC DRAIN COLLECTION	50	2	80	CDH	1500#	SA-106 GR.B	HP	132	333	1910	631	64	2.5	ABPR5-M-S-PD-0137	V17491-ICND-003	
HAC20BR515	HPEC DRAIN COLLECTION	50	2	80	CDH	1500#	SA-106 GR.B	HP	132	333	1910	631	64	2.5	ABPR5-M-S-PD-0137	V17491-ICND-003	
HAC20BR516	HPEC DRAIN COLLECTION	50	2	80	CDH	1500#	SA-106 GR.B	HP	132	333	1910	631	64	2.5	ABPR5-M-S-PD-0137	V17491-ICND-003	
HAC20BR518	**HPEC FUEL GAS PREHEATER EXTRACTION DRAIN**	**25**	**1**	**80**	**CDH**	**1500#**	**SA-106 GR.B**	**HP**	**132**	**333**	**1910**	**631**	**64**	**2.5**	**ABPR5-M-S-PD-0137**	**V17491-ICND-003**	
HAC20BR525	HPEC OUTLET TO DRUM DRAIN	25	1	80	DDH	900#	SA-106 GR.B	HP	108	304	1565	579	64	2.5	ABPR5-M-S-PD-0137	V17491-ICND-003	
HAC20BR601	HPEC VENT	25	1	80	CDH	1500#	SA-106 GR.B	HP	132	333	1910	631	64	2.5	ABPR5-M-S-PD-0137	V17491-ICND-003	
HAC20BR602	HPEC VENT	25	1	80	CDH	1500#	SA-106 GR.B	HP	132	333	1910	631	64	2.5	ABPR5-M-S-PD-0137	V17491-ICND-003	
HAC20BR603	HPEC VENT	25	1	80	CDH	1500#	SA-106 GR.B	HP	132	333	1910	631	64	2.5	ABPR5-M-S-PD-0137	V17491-ICND-003	
HAC20BR604	HPEC VENT	25	1	80	CDH	1500#	SA-106 GR.B	HP	132	333	1910	631	64	2.5	ABPR5-M-S-PD-0137	V17491-ICND-003	
HAC20BR605	HPEC VENT	25	1	80	CDH	1500#	SA-106 GR.B	HP	132	333	1910	631	64	2.5	ABPR5-M-S-PD-0137	V17491-ICND-003	
HAC20BR606	HPEC VENT	25	1	80	CDH	1500#	SA-106 GR.B	HP	132	333	1910	631	64	2.5	ABPR5-M-S-PD-0137	V17491-ICND-003	
HAC20BR607	HPEC VENT	25	1	80	CDH	1500#	SA-106 GR.B	HP	132	333	1910	631	64	2.5	ABPR5-M-S-PD-0137	V17491-ICND-003	
HAC20BR608	HPEC VENT	25	1	80	CDH	1500#	SA-106 GR.B	HP	132	333	1910	631	64	2.5	ABPR5-M-S-PD-0137	V17491-ICND-003	
HAC20BR609	HPEC VENT	25	1	80	CDH	1500#	SA-106 GR.B	HP	132	333	1910	631	64	2.5	ABPR5-M-S-PD-0137	V17491-ICND-003	
HAC20BR610	HPEC VENT	25	1	80	CDH	1500#	SA-106 GR.B	HP	132	333	1910	631	64	2.5	ABPR5-M-S-PD-0137	V17491-ICND-003	
HAC20BR611	HPEC VENT	25	1	80	CDH	1500#	SA-106 GR.B	HP	132	333	1910	631	64	2.5	ABPR5-M-S-PD-0137	V17491-ICND-003	
HAC20BR612	HPEC VENT	25	1	80	CDH	1500#	SA-106 GR.B	HP	132	333	1910	631	64	2.5	ABPR5-M-S-PD-0137	V17491-ICND-003	
HAC20BR613	HPEC VENT	25	1	80	CDH	1500#	SA-106 GR.B	HP	132	333	1910	631	64	2.5	ABPR5-M-S-PD-0137	V17491-ICND-003	
HAC20BR614	HPEC MODULE VENT HEADER	50	2	80	CDH	1500#	SA-106 GR.B	HP	132	333	1910	631	64	2.5	ABPR5-M-S-PD-0137	V17491-ICND-003	
HAC20BR615	HPEC MODULE VENT HEADER TO HP DRUM	50	2	80	DDH	900#	SA-106 GR.B	HP	108	304	1565	579	64	2.5	ABPR5-M-S-PD-0137	V17491-ICND-003	
~~HAC20BR625~~	~~HPEC FUEL GAS PREHEATER EXTRACTION VENT~~	~~25~~	~~1~~	~~80~~	~~CDH~~	~~1500#~~	~~SA-106 GR.B~~	~~HP~~	~~132~~	~~333~~	~~1910~~	~~631~~	~~64~~	~~2.5~~	~~ABPR5-M-S-PD-0137~~	~~V17491-ICND-003~~	deleted
HAC21BR801	HP CHEMICAL FEED	25	1	80	DDH	900#	SA-106 GR.B	HP	108	304	1565	579	64	2.5	ABPR5-M-S-PD-0137	V17491-ICND-003	
HAC50BR001	LP ECON OUTLET	65	2.5	40	GDH	300#	SA-106 GR.B	LP	19	213	275	415	51	2	ABPR5-M-S-PD-0138	V17491-ICND-004	
HAC50BR002	LPEC OUTLET	65	2.5	40	GDH	300#	SA-106 GR.B	LPEC	29	234	425	454	51	2	ABPR5-M-S-PD-0138	V17491-ICND-004	
HAC50BR003	LPEC OUTLET	90	3.5	40	GDH	300#	SA-106 GR.B	LPEC	29	234	425	454	51	2	ABPR5-M-S-PD-0138	V17491-ICND-004	
HAC50BR004	LPEC TO DA	80	3	40	GDH	300#	SA-106 GR.B	LPEC	29	234	425	454	51	2	ABPR5-M-S-PD-0138	V17491-ICND-004	
HAC50BR006	LPEC 2-1 XOVER	90	3.5	40	GDK	300#	SA-106 GR.B	LPEC	29	234	425	454	0	0	ABPR5-M-S-PD-0138	V17491-ICND-004	
HAC50BR007	LPEC 3-2 XOVER	90	3.5	40	GDK	300#	SA-106 GR.B	LPEC	29	234	425	454	0	0	ABPR5-M-S-PD-0138	V17491-ICND-004	
HAC50BR008	LPEC 4-3 XOVER	90	3.5	40	GDK	300#	SA-106 GR.B	LPEC	29	234	425	454	0	0	ABPR5-M-S-PD-0138	V17491-ICND-004	
HAC50BR501	LPEC DRAIN	25	1	80	GDH	300#	SA-106 GR.B	LPEC	29	234	425	454	38	1.5	ABPR5-M-S-PD-0138	V17491-ICND-004	
HAC50BR502	LPEC DRAIN	25	1	80	GDH	300#	SA-106 GR.B	LPEC	29	234	425	454	38	1.5	ABPR5-M-S-PD-0138	V17491-ICND-004	
HAC50BR503	LPEC DRAIN	25	1	80	GDH	300#	SA-106 GR.B	LPEC	29	234	425	454	38	1.5	ABPR5-M-S-PD-0138	V17491-ICND-004	
HAC50BR504	LPEC DRAIN	25	1	80	GDH	300#	SA-106 GR.B	LPEC	29	234	425	454	38	1.5	ABPR5-M-S-PD-0138	V17491-ICND-004	
HAC50BR505	LPEC DRAIN COLLECTION	50	2	80	GDH	300#	SA-106 GR.B	LPEC	29	234	425	454	38	1.5	ABPR5-M-S-PD-0138	V17491-ICND-004	
HAC50BR601	LPEC VENT	25	1	80	GDH	300#	SA-106 GR.B	LPEC	29	234	425	454	38	1.5	ABPR5-M-S-PD-0138	V17491-ICND-004	
HAC50BR602	LPEC VENT	25	1	80	GDH	300#	SA-106 GR.B	LPEC	29	234	425	454	38	1.5	ABPR5-M-S-PD-0138	V17491-ICND-004	
HAC50BR603	LPEC VENT	25	1	80	GDH	300#	SA-106 GR.B	LPEC	29	234	425	454	38	1.5	ABPR5-M-S-PD-0138	V17491-ICND-004	
HAC50BR604	LPEC VENT	25	1	80	GDH	300#	SA-106 GR.B	LPEC	29	234	425	454	38	1.5	ABPR5-M-S-PD-0138	V17491-ICND-004	
HAC50BR605	LPEC MODULE VENT HEADER	50	2	80	GDH	300#	SA-106 GR.B	LPEC	29	234	425	454	38	1.5	ABPR5-M-S-PD-0138	V17491-ICND-004	
HAC50BR606	LPEC MODULE VENT HEADER TO LP DRUM	50	2	80	GDH	300#	SA-106 GR.B	LP	29	234	425	454	38	1.5	ABPR5-M-S-PD-0138	V17491-ICND-004	
HAC50BR801	LP CHEMICAL FEED	25	1	80	GDH	300#	SA-106 GR.B	LP	19	213	275	415	38	1.5	ABPR5-M-S-PD-0138	V17491-ICND-004	

Line_Tag	Service	Size (DN)	Size (NPS)	Schedule	Spec	ANSI_Class	Pipe_Matl	Sys	D_Press (Bar)	D_Temp (C)	D_Press (PSIG)	D_Temp (F)	Insul Thk (mm)	Insul Thk (in)	Customer's PID No.	VPI PID's No.	Notes
HAD10BR001	HPEV 1 RISER	125	5	80	DDK	900#	SA-106 GR.B	HP	92	306	1340	583	76	3	ABPR5-M-S-PD-0137	V17491-ICND-003	
HAD10BR002	HPEV 2 RISER	100	4	80	DDK	900#	SA-106 GR.B	HP	92	306	1340	583	76	3	ABPR5-M-S-PD-0137	V17491-ICND-003	
HAD10BR003	HPEV 3 RISER	80	3	80	DDK	900#	SA-106 GR.B	HP	92	306	1340	583	76	3	ABPR5-M-S-PD-0137	V17491-ICND-003	
HAD10BR004	HPEV 4 RISER	65	2.5	80	DDK	900#	SA-106 GR.B	HP	92	306	1340	583	64	2.5	ABPR5-M-S-PD-0137	V17491-ICND-003	
HAD10BR005	HPEV 5 RISER	65	2.5	80	DDK	900#	SA-106 GR.B	HP	92	306	1340	583	64	2.5	ABPR5-M-S-PD-0137	V17491-ICND-003	
HAD10BR006	HPEV 3-5 COLLECTION HEADER	125	5	80	DDK	900#	SA-106 GR.B	HP	92	306	1340	583	76	3	ABPR5-M-S-PD-0137	V17491-ICND-003	
HAD10BR007	HPEV 1 FEEDER	100	4	80	DDK	900#	SA-106 GR.B	HP	92	306	1340	583	76	3	ABPR5-M-S-PD-0137	V17491-ICND-003	
HAD10BR008	HPEV 2 FEEDER	90	3.5	80	DDK	900#	SA-106 GR.B	HP	92	306	1340	583	76	3	ABPR5-M-S-PD-0137	V17491-ICND-003	
HAD10BR009	HPEV 3 FEEDER	65	2.5	80	DDK	900#	SA-106 GR.B	HP	92	306	1340	583	64	2.5	ABPR5-M-S-PD-0137	V17491-ICND-003	
HAD10BR010	HPEV 4 FEEDER	50	2	80	DDK	900#	SA-106 GR.B	HP	92	306	1340	583	64	2.5	ABPR5-M-S-PD-0137	V17491-ICND-003	
HAD10BR011	HPEV 5 FEEDER	50	2	80	DDK	900#	SA-106 GR.B	HP	92	306	1340	583	64	2.5	ABPR5-M-S-PD-0137	V17491-ICND-003	
HAD10BR012	HP DOWNCOMER	250	10	60	DDK	900#	SA-106 GR.B	HP	92	306	1340	583	89	3.5	ABPR5-M-S-PD-0137	V17491-ICND-003	
HAD10BR013	HPEV CHEMICAL CLEAN	100	4	80	DDH	900#	SA-106 GR.B	HP	92	306	1340	583	76	3	ABPR5-M-S-PD-0137	V17491-ICND-003	
HAD10BR501	HP CONTINUOUS BLOWDOWN	50	2	80	DDH	900#	SA-106 GR.B	HP	92	306	1340	583	64	2.5	ABPR5-M-S-PD-0137	V17491-ICND-003	
HAD10BR502	HP DRUM LEVEL GAUGE DRAIN	8	0.5	80	DDH	900#	SA-106 GR.B	HP	92	306	1340	583	64	2.5	ABPR5-M-S-PD-0137	V17491-ICND-003	
HAD10BR503	HP DRUM WATER COLUMN DRAIN	20	0.75	80	DDH	900#	SA-106 GR.B	HP	92	306	1340	583	64	2.5	ABPR5-M-S-PD-0137	V17491-ICND-003	
HAD10BR504	HP INTERMITTENT BLOWDOWN	50	2	80	DDH	900#	SA-106 GR.B	HP	108	306	1565	583	64	2.5	ABPR5-M-S-PD-0137	V17491-ICND-003	
HAD10BR601	HP DRUM VENT	25	1	80	DDH	900#	SA-106 GR.B	HP	90	304	1300	579	64	2.5	ABPR5-M-S-PD-0137	V17491-ICND-003	
HAD10BR602	HP DRUM N2	25	1	80	DDH	900#	SA-106 GR.B	HP	90	304	1300	579	64	2.5	ABPR5-M-S-PD-0137	V17491-ICND-003	
HAD10BR701	HP DRUM LEVEL TRANSMITTER	25	1	80	DDH	900#	SA-106 GR.B	HP	92	306	1340	583	64	2.5	ABPR5-M-S-PD-0137	V17491-ICND-003	
HAD10BR702	HP DRUM LEVEL TRANSMITTER	25	1	80	DDH	900#	SA-106 GR.B	HP	92	306	1340	583	64	2.5	ABPR5-M-S-PD-0137	V17491-ICND-003	
HAD10BR703	HP DRUM LEVEL TRANSMITTER	25	1	80	DDH	900#	SA-106 GR.B	HP	92	306	1340	583	64	2.5	ABPR5-M-S-PD-0137	V17491-ICND-003	
HAD10BR704	HP DRUM LEVEL TRANSMITTER	25	1	80	DDH	900#	SA-106 GR.B	HP	92	306	1340	583	64	2.5	ABPR5-M-S-PD-0137	V17491-ICND-003	
HAD10BR705	HP DRUM LEVEL GAUGE	40	1.5	80	DDH	900#	SA-106 GR.B	HP	92	306	1340	583	64	2.5	ABPR5-M-S-PD-0137	V17491-ICND-003	
HAD10BR706	HP DRUM LEVEL GAUGE	40	1.5	80	DDH	900#	SA-106 GR.B	HP	92	306	1340	583	64	2.5	ABPR5-M-S-PD-0137	V17491-ICND-003	
HAD10BR709	HP DRUM PRESSURE TRANSMITTER	20	0.75	80	DDH	900#	SA-106 GR.B	HP	90	304	1300	579	64	2.5	ABPR5-M-S-PD-0137	V17491-ICND-003	
HAD10BR710	HP DRUM PRESSURE TRANSMITTER	20	0.75	80	DDH	900#	SA-106 GR.B	HP	90	304	1300	579	64	2.5	ABPR5-M-S-PD-0137	V17491-ICND-003	
HAD10BR711	HP DRUM PRESSURE INDICATOR	20	0.75	80	DDH	900#	SA-106 GR.B	HP	90	304	1300	579	64	2.5	ABPR5-M-S-PD-0137	V17491-ICND-003	
HAD10BR712	HP DRUM PRESSURE INDICATOR TEST	15	0.5	80	DDH	900#	SA-106 GR.B	HP	90	304	1300	579	64	2.5	ABPR5-M-S-PD-0137	V17491-ICND-003	
HAD10BR713	HP DRUM LEVEL TRANSMITTER	25	1	80	DDH	900#	SA-106 GR.B	HP	92	306	1340	583	64	2.5	ABPR5-M-S-PD-0137	V17491-ICND-003	
HAD10BR714	HP DRUM LEVEL TRANSMITTER	25	1	80	DDH	900#	SA-106 GR.B	HP	92	306	1340	583	64	2.5	ABPR5-M-S-PD-0137	V17491-ICND-003	
HAD10BR801	HP DRUM SAMPLE	20	0.75	80	DDH	900#	SA-106 GR.B	HP	92	306	1340	583	64	2.5	ABPR5-M-S-PD-0137	V17491-ICND-003	
HAD10BR901	HP DRUM SAFETY VALVE INLET	65	2.5	80	DDH	900#	SA-106 GR.B	HP	90	304	1300	579	64	2.5	ABPR5-M-S-PD-0137	V17491-ICND-003	
HAD10BR903	HP DRUM SAFETY VALVE OUTLET	150	6	40	GDD	300#	SA-106 GR.B	HP	14	204	202	400	51	2	ABPR5-M-S-PD-0137	V17491-ICND-003	
HAD11BR504	HP DRUM SAFETY VALVE DRAIN	15	0.5	80	HDD	150#	SA-106 GR.B	HP	14	177	200	350	0	0	ABPR5-M-S-PD-0140	V17491-ICND-006	
HAD11BR505	HP DRUM SAFETY VALVE VENT DRAIN	15	0.5	80	HDD	150#	SA-106 GR.B	HP	14	177	200	350	0	0	ABPR5-M-S-PD-0140	V17491-ICND-006	
HAD11BR601	HP DRUM SAFETY VALVE VENT	32	1.25	80	HDD	150#	SA-106 GR.B	HP	14	177	200	350	0	0	ABPR5-M-S-PD-0140	V17491-ICND-006	
HAD50BR001	LP RISER 1	150	6	40	GCK	300#	SA-335 P11	LP	15	202	220	396	51	2	ABPR5-M-S-PD-0138	V17491-ICND-004	
HAD50BR002	LP RISER 2	100	4	40	GCK	300#	SA-335 P11	LP	15	202	220	396	51	2	ABPR5-M-S-PD-0138	V17491-ICND-004	
HAD50BR003	LP RISER 3	80	3	40	GCK	300#	SA-335 P11	LP	15	202	220	396	51	2	ABPR5-M-S-PD-0138	V17491-ICND-004	
HAD50BR004	LP RISER 4	65	2.5	80	GCK	300#	SA-335 P11	LP	15	202	220	396	51	2	ABPR5-M-S-PD-0138	V17491-ICND-004	
HAD50BR005	LP FEEDER 1	100	4	40	GDK	300#	SA-106 GR.B	LP	15	202	220	396	51	2	ABPR5-M-S-PD-0138	V17491-ICND-004	
HAD50BR006	LP FEEDER 2	80	3	40	GDK	300#	SA-106 GR.B	LP	15	202	220	396	51	2	ABPR5-M-S-PD-0138	V17491-ICND-004	
HAD50BR007	LP FEEDER 3	50	2	80	GDK	300#	SA-106 GR.B	LP	15	202	220	396	38	1.5	ABPR5-M-S-PD-0138	V17491-ICND-004	
HAD50BR008	LP FEEDER 4	50	2	80	GDK	300#	SA-106 GR.B	LP	15	202	220	396	38	1.5	ABPR5-M-S-PD-0138	V17491-ICND-004	
HAD50BR009	LP DOWNCOMER	200	8	40	GDK	300#	SA-106 GR.B	LP	15	202	220	396	51	2	ABPR5-M-S-PD-0138	V17491-ICND-004	
HAD50BR010	LP CHEMICAL CLEAN	100	4	40	GDH	300#	SA-106 GR.B	LP	15	202	220	396	51	2	ABPR5-M-S-PD-0138	V17491-ICND-004	
HAD50BR501	LP CONTINUOUS BLOWDOWN	50	2	80	GDH	300#	SA-106 GR.B	LP	15	202	220	396	38	1.5	ABPR5-M-S-PD-0138	V17491-ICND-004	
HAD50BR502	LP LEVEL GAUGE DRAIN	15	0.5	80	HDH	150#	SA-106 GR.B	LP	15	202	220	396	38	1.5	ABPR5-M-S-PD-0138	V17491-ICND-004	
HAD50BR503	LP WATER COLUMN DRAIN	20	0.75	80	HDH	150#	SA-106 GR.B	LP	15	202	220	396	38	1.5	ABPR5-M-S-PD-0138	V17491-ICND-004	
HAD50BR504	LP INTERMITTENT BLOWDOWN	50	2	80	GDH	300#	SA-106 GR.B	LP	19	202	275	396	38	1.5	ABPR5-M-S-PD-0138	V17491-ICND-004	
HAD50BR601	LP DRUM VENT	25	1	80	HDH	150#	SA-106 GR.B	LP	12	193	180	380	38	1.5	ABPR5-M-S-PD-0138	V17491-ICND-004	
HAD50BR602	LP DRUM N2	25	1	80	HDH	150#	SA-106 GR.B	LP	12	193	180	380	38	1.5	ABPR5-M-S-PD-0138	V17491-ICND-004	
HAD50BR701	LP DRUM LEVEL TRANSMITTER	25	1	80	HDH	150#	SA-106 GR.B	LP	15	202	220	396	38	1.5	ABPR5-M-S-PD-0138	V17491-ICND-004	
HAD50BR702	LP DRUM LEVEL TRANSMITTER	25	1	80	HDH	150#	SA-106 GR.B	LP	15	202	220	396	38	1.5	ABPR5-M-S-PD-0138	V17491-ICND-004	
HAD50BR703	LP DRUM LEVEL TRANSMITTER	25	1	80	HDH	150#	SA-106 GR.B	LP	15	202	220	396	38	1.5	ABPR5-M-S-PD-0138	V17491-ICND-004	
HAD50BR704	LP DRUM LEVEL TRANSMITTER	25	1	80	HDH	150#	SA-106 GR.B	LP	15	202	220	396	38	1.5	ABPR5-M-S-PD-0138	V17491-ICND-004	
HAD50BR705	LP DRUM LEVEL GAUGE	40	1.5	80	HDH	150#	SA-106 GR.B	LP	15	202	220	396	38	1.5	ABPR5-M-S-PD-0138	V17491-ICND-004	
HAD50BR706	LP DRUM LEVEL GAUGE	40	1.5	80	HDH	150#	SA-106 GR.B	LP	15	202	220	396	38	1.5	ABPR5-M-S-PD-0138	V17491-ICND-004	
HAD50BR708	LP DRUM PRESSURE TRANSMITTER	20	0.75	80	HDH	150#	SA-106 GR.B	LP	12	193	180	380	38	1.5	ABPR5-M-S-PD-0138	V17491-ICND-004	
HAD50BR709	LP DRUM PRESSURE TRANSMITTER	20	0.75	80	HDH	150#	SA-106 GR.B	LP	12	193	180	380	38	1.5	ABPR5-M-S-PD-0138	V17491-ICND-004	
HAD50BR710	LP DRUM PRESSURE GAUGE	20	0.75	80	HDH	150#	SA-106 GR.B	LP	12	193	180	380	38	1.5	ABPR5-M-S-PD-0138	V17491-ICND-004	
HAD50BR711	LP DRUM PRESSURE TEST	15	0.5	80	HDH	150#	SA-106 GR.B	LP	12	193	180	380	38	1.5	ABPR5-M-S-PD-0138	V17491-ICND-004	
HAD50BR712	LP DRUM LEVEL TRANSMITTER	25	1	80	HDH	150#	SA-106 GR.B	LP	15	202	220	396	38	1.5	ABPR5-M-S-PD-0138	V17491-ICND-004	

Line_Tag	Service	Size (DN)	Size (NPS)	Schedule	Spec	ANSI_Class	Pipe_Matl	Sys	D_Press (Bar)	D_Temp (C)	D_Press (PSIG)	D_Temp (F)	Insul Thk (mm)	Insul Thk (in)	Customer's PID No.	VPI PID's No.	Notes
HAD50BR713	LP DRUM LEVEL TRANSMITTER	25	1	80	HDH	150#	SA-106 GR.B	LP	15	202	220	396	38	1.5	ABPR5-M-S-PD-0138	V17491-ICND-004	
HAD50BR801	LP DRUM SAMPLE	20	0.75	80	HDH	150#	SA-106 GR.B	LP	15	202	220	396	38	1.5	ABPR5-M-S-PD-0138	V17491-ICND-004	
HAD50BR901	LP DRUM SAFETY VALVE #1 INLET	40	1.5	80	HDH	150#	SA-106 GR.B	LP	12	193	180	380	38	1.5	ABPR5-M-S-PD-0138	V17491-ICND-004	
HAD50BR902	LP DRUM SAFETY VALVE #2 INLET	40	1.5	80	HDH	150#	SA-106 GR.B	LP	12	193	180	380	38	1.5	ABPR5-M-S-PD-0138	V17491-ICND-004	
HAD50BR903	LP DRUM SAFETY VALVE #1 OUTLET	100	4	40	HDD	150#	SA-106 GR.B	LP	3	177	50	350	51	2	ABPR5-M-S-PD-0138	V17491-ICND-004	
HAD50BR904	LP DRUM SAFETY VALVE #2 OUTLET	100	4	40	HDD	150#	SA-106 GR.B	LP	3	177	50	350	51	2	ABPR5-M-S-PD-0138	V17491-ICND-004	
HAD51BR504	LP DRUM SAFETY VALVE #1 DRAIN	15	0.5	80	HDD	150#	SA-106 GR.B	LP	3	93	50	200	0	0	ABPR5-M-S-PD-0140	V17491-ICND-006	
HAD51BR506	LP DRUM SAFETY VALVE #2 DRAIN	15	0.5	80	HDD	150#	SA-106 GR.B	LP	3	93	50	200	0	0	ABPR5-M-S-PD-0140	V17491-ICND-006	
HAH10BR001	HPSH INLET	125	5	40	DDK	900#	SA-106 GR.B	HP	90	304	1300	579	76	3	ABPR5-M-S-PD-0137	V17491-ICND-003	
HAH10BR002	HPSH 3-2 XOVER	125	5	80	DCK	900#	SA-335 P11	HP	90	406	1300	762	0	0	ABPR5-M-S-PD-0137	V17491-ICND-003	
HAH10BR003	HPSH 2 TO ATTEMPERATOR	150	6	80	CBK	1500#	SA-335 P22	HP	90	499	1300	931	114	4.5	ABPR5-M-S-PD-0137	V17491-ICND-003	
HAH10BR004	HPSH ATTEMP	250	10	100	CBK	1500#	SA-335 P22	HP	90	499	1300	931	127	5	ABPR5-M-S-PD-0137	V17491-ICND-003	
HAH10BR005	HPSH ATTEMP	250	10	100	CBK	1500#	SA-335 P22	HP	90	499	1300	931	127	5	ABPR5-M-S-PD-0137	V17491-ICND-003	
HAH10BR006	HPSH ATTEMP OUTLET	150	6	80	DBK	900#	SA-335 P22	HP	90	487	1300	908	114	4.5	ABPR5-M-S-PD-0137	V17491-ICND-003	
HAH10BR007	HPSH OUTLET FEEDER	150	6	160	CBH	1500#	SA-335 P22	HP	85	533	1235	992	127	5	ABPR5-M-S-PD-0137	V17491-ICND-003	
HAH10BR008	HPSH OUTLET	200	8	120	CBH	1500#	SA-335 P22	HP	85	533	1235	992	140	5.5	ABPR5-M-S-PD-0137	V17491-ICND-003	
HAH10BR009	HPSH OUTLET	200	8	120	CBD	1500#	SA-335 P22	HP	85	533	1235	992	140	5.5	ABPR5-M-S-PD-0137	V17491-ICND-003	
HAH10BR101	HP ATTEMP DRAIN POT	250	10	100	CBK	1500#	SA-335 P22	HP	90	499	1300	931	127	5	ABPR5-M-S-PD-0137	V17491-ICND-003	
HAH10BR102	HPSH DRAIN POT	200	8	120	CBH	1500#	SA-335 P22	HP	85	533	1235	992	140	5.5	ABPR5-M-S-PD-0137	V17491-ICND-003	
HAH10BR501	HPSH 3-2 XOVER DRAIN	25	1	80	DCH	900#	SA-335 P11	HP	105	406	1525	762	89	3.5	ABPR5-M-S-PD-0137	V17491-ICND-003	
HAH10BR502	HPSH ATTEMP DRAIN POT DRAIN	25	1	80	CBH	1500#	SA-335 P22	HP	105	499	1525	931	102	4	ABPR5-M-S-PD-0137	V17491-ICND-003	
HAH10BR503	HPSH DRAIN POT DRAIN	25	1	80	BBH	2500#	SA-335 P22	HP	101	533	1460	992	102	4	ABPR5-M-S-PD-0137	V17491-ICND-003	
HAH10BR504	HPSH OUTLET FREEBLOW DRAIN	25	1	80	CBH	1500#	SA-335 P22	HP	85	533	1235	992	102	4	ABPR5-M-S-PD-0137	V17491-ICND-003	
HAH10BR505	HPSH OUTLET DRAIN	25	1	80	CBD	1500#	SA-335 P22	HP	85	533	1235	992	102	4	ABPR5-M-S-PD-0137	V17491-ICND-003	
HAH10BR601	HPSH INLET HYDRO VENT	25	1	80	DDH	900#	SA-106 GR.B	HP	90	304	1300	579	64	2.5	ABPR5-M-S-PD-0137	V17491-ICND-003	
HAH10BR602	HP ATTEMP HYDRO VENT	25	1	80	CBH	1500#	SA-335 P22	HP	90	499	1300	931	102	4	ABPR5-M-S-PD-0137	V17491-ICND-003	
HAH10BR603	HPSH START UP VENT INLET	150	6	120	CBH	1500#	SA-335 P22	HP	85	533	1235	992	127	5	ABPR5-M-S-PD-0137	V17491-ICND-003	
HAH10BR604	HPSH START UP VENT OUTLET	200	8	40	GCD	300#	SA-335 P11	HP	7	538	97	1000	127	5	ABPR5-M-S-PD-0137	V17491-ICND-003	
HAH10BR701	HP ATTEMP PRESS IND TRANSMITTER	20	0.75	80	CBH	1500#	SA-335 P22	HP	90	499	1300	931	102	4	ABPR5-M-S-PD-0137	V17491-ICND-003	
HAH10BR702	HPSH OUTLET PRESS IND	20	0.75	80	CBH	1500#	SA-335 P22	HP	85	533	1235	992	102	4	ABPR5-M-S-PD-0137	V17491-ICND-003	
HAH10BR703	HPSH OUTLET PRESS TRANS	20	0.75	80	CBH	1500#	SA-335 P22	HP	85	533	1235	992	102	4	ABPR5-M-S-PD-0137	V17491-ICND-003	
HAH10BR801	HP SAT STEAM SAMPLE	10	0.375"	10	DHH	900#	A-312 TP316H	HP	90	304	1300	579	64	2.5	ABPR5-M-S-PD-0137	V17491-ICND-003	
HAH10BR803	HPSH TO STEAM TURBINE GLAND SEAL	40	1.5	80	CBH	1500#	SA-335 P22	HP	85	533	1235	992	102	4	ABPR5-M-S-PD-0137	V17491-ICND-003	
HAH10BR901	HPSH SAFETY VALVE INLET	50	2	80	CBH	1500#	SA-335 P22	HP	85	533	1235	992	102	4	ABPR5-M-S-PD-0137	V17491-ICND-003	
HAH10BR902	HPSH SAFETY VALVE OUTLET	100	4	40	GCD	300#	SA-335 P11	HP	13	510	192	950	102	4	ABPR5-M-S-PD-0137	V17491-ICND-003	
HAH12BR501	HPSH SAFETY VALVE BODY DRAIN	15	0.5	80	GCD	300#	SA-335 P11	HP	10	482	150	900	0	0	ABPR5-M-S-PD-0140	V17491-ICND-006	
HAH12BR502	HPSH SAFETY VALVE VENT DRAIN	15	0.5	80	GCD	300#	SA-335 P11	HP	10	482	150	900	0	0	ABPR5-M-S-PD-0140	V17491-ICND-006	
HAH12BR503	HPSH SILENCER DRAIN	50	2	80	HDD	150#	SA-106 GR.B	HP	7	177	100	350	0	0	ABPR5-M-S-PD-0140	V17491-ICND-006	
HAH12BR601	HPSH SAFETY VALVE VENT	32	1.25	80	GCD	300#	SA-335 P11	HP	7	482	100	900	0	0	ABPR5-M-S-PD-0140	V17491-ICND-006	
HAH50BR001	LPSH INLET	150	6	40	HDK	150#	SA-106 GR.B	LP	12	193	180	380	51	2	ABPR5-M-S-PD-0138	V17491-ICND-004	
HAH50BR002	LPSH OUTLET FEEDER	150	6	40	HDH	150#	SA-106 GR.B	LP	11	256	160	492	51	2	ABPR5-M-S-PD-0138	V17491-ICND-004	
HAH50BR003	LPSH MAIN STEAM	200	8	40	HDH	150#	SA-106 GR.B	LP	11	256	160	492	51	2	ABPR5-M-S-PD-0138	V17491-ICND-004	
HAH50BR004	LPSH MAIN STEAM	200	8	40	HDD	150#	SA-106 GR.B	LP	11	256	160	492	51	2	ABPR5-M-S-PD-0138	V17491-ICND-004	
HAH50BR101	LPSH DRAIN POT	200	8	40	HDH	150#	SA-106 GR.B	LP	11	256	160	492	51	2	ABPR5-M-S-PD-0138	V17491-ICND-004	
HAH50BR501	LPSH DRAIN POT DRAIN	25	1	80	GDH	300#	SA-106 GR.B	LP	14	256	200	492	38	1.5	ABPR5-M-S-PD-0138	V17491-ICND-004	
HAH50BR502	LPSH OUTLET FREEBLOW DRAIN	25	1	80	HDH	150#	SA-106 GR.B	LP	11	256	160	492	38	1.5	ABPR5-M-S-PD-0138	V17491-ICND-004	
HAH50BR503	LPSH OUTLET DRAIN	25	1	80	HDD	150#	SA-106 GR.B	LP	11	256	160	492	38	1.5	ABPR5-M-S-PD-0138	V17491-ICND-004	
HAH50BR601	LPSH INLET HYDRO VENT	25	1	80	HDH	150#	SA-106 GR.B	LP	12	193	180	380	38	1.5	ABPR5-M-S-PD-0138	V17491-ICND-004	
HAH50BR602	LPSH START UP VENT	100	4	40	HDH	150#	SA-106 GR.B	LP	11	256	160	492	51	2	ABPR5-M-S-PD-0138	V17491-ICND-004	
HAH50BR603	LPSH START UP VENT OUTLET	150	6	40	HDD	150#	SA-106 GR.B	LP	3	246	50	475	51	2	ABPR5-M-S-PD-0138	V17491-ICND-004	
HAH50BR701	LPSH OUTLET PRESSURE GAUGE	20	0.75	80	HDH	150#	SA-106 GR.B	LP	11	256	160	492	38	1.5	ABPR5-M-S-PD-0138	V17491-ICND-004	
HAH50BR702	LPSH OUTLET PRESSURE TRANSMITTER	20	0.75	80	HDH	150#	SA-106 GR.B	LP	11	256	160	492	38	1.5	ABPR5-M-S-PD-0138	V17491-ICND-004	
HAH50BR901	LPSH SAFETY VALVE INLET	40	1.5	80	HDH	150#	SA-106 GR.B	LP	11	256	160	492	38	1.5	ABPR5-M-S-PD-0138	V17491-ICND-004	
HAH50BR902	LPSH SAFETY VALVE OUTLET	80	3	40	HDD	150#	SA-106 GR.B	LP	3	232	50	450	51	2	ABPR5-M-S-PD-0138	V17491-ICND-004	
HAH52BR501	LPSH SAFETY VALVE BODY DRAIN	15	0.5	80	HDD	150#	SA-106 GR.B	LP	3	66	50	150	0	0	ABPR5-M-S-PD-0140	V17491-ICND-006	
HAH52BR503	LPSH SILENCER DRAIN	50	2	80	HDD	150#	SA-106 GR.B	LP	3	66	50	150	0	0	ABPR5-M-S-PD-0140	V17491-ICND-006	
HBK10BR501	INLET DUCT DRAIN	80	3	40	HDX	150#	SA-106 GR.B	XX	1	316	10	600	64	2.5	ABPR5-M-S-PD-0136	V17491-ICND-002	
HBK10BR502	BOX 1 CASING DRAIN	80	3	40	HDX	150#	SA-106 GR.B	XX	1	316	10	600	64	2.5	ABPR5-M-S-PD-0136	V17491-ICND-002	
HBK10BR503	BOX 2 CASING DRAIN	80	3	40	HDX	150#	SA-106 GR.B	XX	1	316	10	600	64	2.5	ABPR5-M-S-PD-0136	V17491-ICND-002	
HBK10BR504	BOX 3 CASING DRAIN	80	3	40	HDX	150#	SA-106 GR.B	XX	1	316	10	600	64	2.5	ABPR5-M-S-PD-0136	V17491-ICND-002	
HNB10BR701	TRANSITION DUCT PRESS TRANSMITTER	25	1	80	HJX	150#	A-312 TP304	XX	1	538	10	1000	127	5	ABPR5-M-S-PD-0136	V17491-ICND-002	
HNB10BR702	TRANSITION DUCT PRESS TRANSMITTER	25	1	80	HJX	150#	A-312 TP304	XX	1	538	10	1000	127	5	ABPR5-M-S-PD-0136	V17491-ICND-002	
HNB10BR703	TRANSITION DUCT PRESS TRANSMITTER	25	1	80	HJX	150#	A-312 TP304	XX	1	538	10	1000	127	5	ABPR5-M-S-PD-0136	V17491-ICND-002	
HNB10BR704	TRANSITION DUCT PRESS TRANSMITTER	25	1	80	HJX	150#	A-312 TP304	XX	1	538	10	1000	127	5	ABPR5-M-S-PD-0136	V17491-ICND-002	

Line_Tag	Service	Size (DN)	Size (NPS)	Schedule	Spec	ANSI_Class	Pipe_Matl	Sys	D_Press (Bar)	D_Temp (C)	D_Press (PSIG)	D_Temp (F)	Insul Thk (mm)	Insul Thk (in)	Customer's PID No.	VPI PID's No.	Notes
HNE10BR501	STACK DRAIN	80	3	40	HJX	150#	A-312 TP304	XX	1	177	15	350	51	2	ABPR5-M-S-PD-0136	V17491-ICND-002	
HNE20BR501	TRANSITION DUCT DRAIN	80	3	40	HDX	150#	SA-106 GR.B	XX	1	316	10	600	64	2.5	ABPR5-M-S-PD-0136	V17491-ICND-002	
LAA10BR002	LPEC TO DA (BY OTHERS)	80	3	40	GDH	300#	SA-106 GR.B	DA	29	234	425	454	51	2	ABPR5-M-S-PD-0139	V17491-ICND-005	
LAA10BR013	DA TO STORAGE TANK	600	24	40	HDH	150#	SA-106 GR.B	DA	7	177	100	350	38	1.5	ABPR5-M-S-PD-0139	V17491-ICND-005	
LAA10BR014	DA TO CONDENSATE	200	8	40	HDD	150#	SA-106 GR.B	DA	7	177	100	350	38	1.5	ABPR5-M-S-PD-0139	V17491-ICND-005	
LAA10BR015	LPEC TO DA (BY OTHERS)	200	8	40	GDH	300#	SA-106 GR.B	DA	29	234	425	454	51	2	ABPR5-M-S-PD-0139	V17491-ICND-005	
LAA10BR017	DA TO CT BASIN	80	3	40	HDD	150#	SA-106 GR.B	DA	7	177	100	350	25	1	ABPR5-M-S-PD-0139	V17491-ICND-005	
LAA10BR501	LPEC TO DA DRAIN (BY OTHERS)	25	1	80	GDH	300#	SA-106 GR.B	DA	29	234	425	454	38	1.5	ABPR5-M-S-PD-0139	V17491-ICND-005	
LAA10BR505	DA LEVEL GAUGE DRAIN (BY OTHERS)	15	0.5	80	HDD	150#	SA-106 GR.B	DA	7	177	100	350	25	1	ABPR5-M-S-PD-0139	V17491-ICND-005	
LAA10BR601	DA VENT (BY OTHERS)	80	3	40	HDD	150#	SA-106 GR.B	DA	7	177	100	350	25	1	ABPR5-M-S-PD-0139	V17491-ICND-005	
LAA10BR602	DA N2	25	1	80	HDD	150#	SA-106 GR.B	DA	7	177	100	350	25	1	ABPR5-M-S-PD-0139	V17491-ICND-005	
LAA10BR701	LPEC TO DA FLOW TRANMITTER (BY OTHERS)	20	0.75	80	GDH	300#	SA-106 GR.B	DA	29	234	425	454	38	1.5	ABPR5-M-S-PD-0139	V17491-ICND-005	
LAA10BR702	LPEC TO DA FLOW TRANMITTER (BY OTHERS)	20	0.75	80	GDH	300#	SA-106 GR.B	DA	29	234	425	454	38	1.5	ABPR5-M-S-PD-0139	V17491-ICND-005	
LAA10BR703	DA LEVEL GAUGE	40	1.5	80	HDD	150#	SA-106 GR.B	DA	7	177	100	350	25	1	ABPR5-M-S-PD-0139	V17491-ICND-005	
LAA10BR704	DA LEVEL GAUGE	40	1.5	80	HDD	150#	SA-106 GR.B	DA	7	177	100	350	25	1	ABPR5-M-S-PD-0139	V17491-ICND-005	
LAA10BR705	DA LEVEL TRANSMITTER	25	1	80	HDD	150#	SA-106 GR.B	DA	7	177	100	350	25	1	ABPR5-M-S-PD-0139	V17491-ICND-005	
LAA10BR706	DA LEVEL TRANSMITTER	25	1	80	HDD	150#	SA-106 GR.B	DA	7	177	100	350	25	1	ABPR5-M-S-PD-0139	V17491-ICND-005	
LAA10BR707	DA PRESSURE INDICATOR (BY OTHERS)	20	0.75	80	HDD	150#	SA-106 GR.B	DA	7	177	100	350	25	1	ABPR5-M-S-PD-0139	V17491-ICND-005	
LAA10BR708	DA PRESSURE TRANSMITTER (BY OTHERS)	20	0.75	80	HDD	150#	SA-106 GR.B	DA	7	177	100	350	25	1	ABPR5-M-S-PD-0139	V17491-ICND-005	
LAA10BR709	DA LEVEL TRANSMITTER	25	1	80	HDD	150#	SA-106 GR.B	DA	7	177	100	350	25	1	ABPR5-M-S-PD-0139	V17491-ICND-005	
LAA10BR710	DA LEVEL TRANSMITTER	25	1	80	HDD	150#	SA-106 GR.B	DA	7	177	100	350	25	1	ABPR5-M-S-PD-0139	V17491-ICND-005	
LAA10BR901	DA SAFETY VALVE INLET	150	6	40	HDD	150#	SA-106 GR.B	DA	7	177	100	350	38	1.5	ABPR5-M-S-PD-0139	V17491-ICND-005	
LAA10BR902	DA SAFETY VALVE OUTLET (BY OTHERS)	300	12	40	HDD	150#	SA-106 GR.B	DA	7	177	100	350	51	2	ABPR5-M-S-PD-0139	V17491-ICND-005	
LAA11BR502	DA SAFETY VALVE DRAIN	15	0.5	80	HDD	150#	SA-106 GR.B	DA	3	66	50	150	0	0	ABPR5-M-S-PD-0140	V17491-ICND-006	
LAA11BR503	DA SAFETY VALVE VENT DRAIN	15	0.5	80	HDD	150#	SA-106 GR.B	DA	3	38	50	100	0	0	ABPR5-M-S-PD-0140	V17491-ICND-006	
LAA11BR504	DA SILENCER DRAIN	50	2	80	HDD	150#	SA-106 GR.B	DA	3	66	50	150	0	0	ABPR5-M-S-PD-0140	V17491-ICND-006	
LAA11BR602	DA SAFETY VALVE VENT	25	1	80	HDD	150#	SA-106 GR.B	DA	3	38	50	100	0	0	ABPR5-M-S-PD-0140	V17491-ICND-006	
LAB10BR001	HPEC INLET	150	6	80	DDD	900#	SA-106 GR.B	HP	132	121	1910	250	38	1.5	ABPR5-M-S-PD-0137	V17491-ICND-003	
LAB10BR002	HPEC INLET	150	6	80	CDH	1500#	SA-106 GR.B	HP	132	333	1910	631	76	3	ABPR5-M-S-PD-0137	V17491-ICND-003	
LAB10BR003	HPEC INLET	150	6	80	CDH	1500#	SA-106 GR.B	HP	132	333	1910	631	76	3	ABPR5-M-S-PD-0137	V17491-ICND-003	
LAB10BR501	HPEC INLET DRAIN	25	1	80	DDD	900#	SA-106 GR.B	HP	132	121	1910	250	25	1	ABPR5-M-S-PD-0137	V17491-ICND-003	
LAB10BR502	HPEC INLET DRAIN	25	1	80	CDH	1500#	SA-106 GR.B	HP	132	333	1910	631	64	2.5	ABPR5-M-S-PD-0137	V17491-ICND-003	
LAB10BR504	HPEC INLET DRAIN	25	1	80	CDH	1500#	SA-106 GR.B	HP	132	333	1910	631	64	2.5	ABPR5-M-S-PD-0137	V17491-ICND-003	
LAB10BR701	HP FW FLOW TRANSMITTER	20	0.75	80	DDD	900#	SA-106 GR.B	HP	132	121	1910	250	25	1	ABPR5-M-S-PD-0137	V17491-ICND-003	
LAB10BR702	HP FW FLOW TRANSMITTER	20	0.75	80	DDD	900#	SA-106 GR.B	HP	132	121	1910	250	25	1	ABPR5-M-S-PD-0137	V17491-ICND-003	
LAB10BR703	HPEC INLET FEED PRESS IND	20	0.75	80	CDH	1500#	SA-106 GR.B	HP	132	333	1910	631	64	2.5	ABPR5-M-S-PD-0137	V17491-ICND-003	
LAB10BR704	HPEC INLET FEED PRESS TRANS	20	0.75	80	CDH	1500#	SA-106 GR.B	HP	132	333	1910	631	64	2.5	ABPR5-M-S-PD-0137	V17491-ICND-003	
LAB10BR901	HP ECONOMIZER PRESSURE RELIEF VALVE	50	2	80	CDH	1500#	SA-106 GR.B	HP	132	333	1910	631	64	2.5	ABPR5-M-S-PD-0137	V17491-ICND-003	
LAB24BR010	HP PUMP MINIMUM FLOW TO DA	65	2.5	40	HDD	150#	SA-106 GR.B	DA	7	177	100	350	25	1	ABPR5-M-S-PD-0139	V17491-ICND-005	
LAB25BR010	HP PUMP MINIMUM FLOW TO DA	65	2.5	40	HDD	150#	SA-106 GR.B	DA	7	177	100	350	25	1	ABPR5-M-S-PD-0139	V17491-ICND-005	
LAB26BR010	HP PUMP MINIMUM FLOW TO DA	65	2.5	40	HDD	150#	SA-106 GR.B	DA	7	177	100	350	25	1	ABPR5-M-S-PD-0139	V17491-ICND-005	
LAB50BR001	LP FW INLET	80	3	40	GDD	300#	SA-106 GR.B	LPEC	29	121	425	250	25	1	ABPR5-M-S-PD-0138	V17491-ICND-004	
LAB50BR002	LP FW INLET	80	3	40	GDH	300#	SA-106 GR.B	LPEC	29	234	425	454	51	2	ABPR5-M-S-PD-0138	V17491-ICND-004	
LAB50BR401	LP FW INLET SAFETY VALVE	50	2	80	GDH	300#	SA-106 GR.B	LPEC	29	234	425	454	38	1.5	ABPR5-M-S-PD-0138	V17491-ICND-004	
LAB50BR501	LP FW INLET DRAIN	25	1	80	GDD	300#	SA-106 GR.B	LPEC	29	121	425	250	25	1	ABPR5-M-S-PD-0138	V17491-ICND-004	
LAB50BR502	LP FW INLET DRAIN	25	1	80	GDH	300#	SA-106 GR.B	LPEC	29	234	425	454	38	1.5	ABPR5-M-S-PD-0138	V17491-ICND-004	
LAB50BR503	LP FW INLET DRAIN	25	1	80	GDH	300#	SA-106 GR.B	LPEC	29	234	425	454	38	1.5	ABPR5-M-S-PD-0138	V17491-ICND-004	
LAB50BR701	LP FW FLOW TRANSMITTER	20	0.75	80	GDD	300#	SA-106 GR.B	LPEC	29	121	425	250	25	1	ABPR5-M-S-PD-0138	V17491-ICND-004	
LAB50BR702	LP FW FLOW TRANSMITTER	20	0.75	80	GDD	300#	SA-106 GR.B	LPEC	29	121	425	250	25	1	ABPR5-M-S-PD-0138	V17491-ICND-004	
LAB50BR703	LP FW INLET PRESSURE GAUGE	20	0.75	80	GDH	300#	SA-106 GR.B	LPEC	29	234	425	454	38	1.5	ABPR5-M-S-PD-0138	V17491-ICND-004	
LAB50BR704	LP FW INLET PRESSURE TRANSMITTER	20	0.75	80	GDH	300#	SA-106 GR.B	LPEC	29	234	425	454	38	1.5	ABPR5-M-S-PD-0138	V17491-ICND-004	
LAB54BR010	LP PUMP MINIMUM FLOW TO DA	40	1.5	80	HDD	150#	SA-106 GR.B	DA	7	177	100	350	25	1	ABPR5-M-S-PD-0139	V17491-ICND-005	
LAB55BR010	LP PUMP MINIMUM FLOW TO DA	40	1.5	80	HDD	150#	SA-106 GR.B	DA	7	177	100	350	25	1	ABPR5-M-S-PD-0139	V17491-ICND-005	
LAB56BR010	LP PUMP MINIMUM FLOW TO DA	40	1.5	80	HDD	150#	SA-106 GR.B	DA	7	177	100	350	25	1	ABPR5-M-S-PD-0139	V17491-ICND-005	
LAE10BR001	HP ATTEMP SPRAYWATER	50	2	80	DDD	900#	SA-106 GR.B	HP	132	121	1910	250	25	1	ABPR5-M-S-PD-0137	V17491-ICND-003	
LAE10BR002	HP ATTEMP SPRAYWATER	25	1	80	CBH	1500#	SA-335 P22	HP	132	499	1910	930	102	4	ABPR5-M-S-PD-0137	V17491-ICND-003	
LAE10BR010	**HPEC TO ATTEMP SPRAYWATER (BY OTHERS)**	**40**	**1.5**	**80**	**DDD**	**900#**	**SA-106 GR.B**	**HP**	**132**	**121**	**1910**	**250**	**25**	**1**	**ABPR5-M-S-PD-0137**	**V17491-ICND-003**	**Add per customer**
LAE10BR501	HP ATTEMP SPRAYWATER DRAIN	25	1	80	DDD	900#	SA-106 GR.B	HP	132	121	1910	250	25	1	ABPR5-M-S-PD-0137	V17491-ICND-003	
LAE10BR502	HP ATTEMP SPRAYWATER STRAINER DRAIN	25	1	80	DDD	900#	SA-106 GR.B	HP	132	121	1910	250	25	1	ABPR5-M-S-PD-0137	V17491-ICND-003	
LAE10BR701	HP ATTEMP SPRAYWATER FLOW TRANSMITTER	20	0.75	80	DDD	900#	SA-106 GR.B	HP	132	121	1910	250	25	1	ABPR5-M-S-PD-0137	V17491-ICND-003	
LAE10BR702	HP ATTEMP SPRAYWATER FLOW TRANSMITTER	20	0.75	80	DDD	900#	SA-106 GR.B	HP	132	121	1910	250	25	1	ABPR5-M-S-PD-0137	V17491-ICND-003	
LAE10BR703	HP ATTEMP SPRAYWATER PRESS IND TRANSMITTER	20	0.75	80	DDD	900#	SA-106 GR.B	HP	132	121	1910	250	25	1	ABPR5-M-S-PD-0137	V17491-ICND-003	
LAE10BR704	HP ATTEMP SPRAYWATER STRAINER PRESS DIFF	20	0.75	80	DDD	900#	SA-106 GR.B	HP	132	121	1910	250	25	1	ABPR5-M-S-PD-0137	V17491-ICND-003	
LAE10BR705	HP ATTEMP SPRAYWATER STRAINER PRESS DIFF	20	0.75	80	DDD	900#	SA-106 GR.B	HP	132	121	1910	250	25	1	ABPR5-M-S-PD-0137	V17491-ICND-003	
LBG20BR010	CUSTOMER LP STEAM TO DA (BY OTHERS)	150	6	40	HDD	150#	SA-106 GR.B	DA	11	256	160	492	51	2	ABPR5-M-S-PD-0139	V17491-ICND-005	
LBG20BR020	CUSTOMER LP STEAM TO DA (BY OTHERS)	350	14	40	HDD	150#	SA-106 GR.B	DA	11	256	160	492	38	1.5	ABPR5-M-S-PD-0139	V17491-ICND-005	

Project No: V17491
Customer: Amata B.Grimm Power (Rayong) 5 Limited

Vogt Power International
HRSG LINE LIST

Doc No: V17491-ICNA-001 Revision 01

Line_Tag	Service	Size (DN)	Size (NPS)	Schedule	Spec	ANSI_Class	Pipe_Matl	Sys	D_Press (Bar)	D_Temp (C)	D_Press (PSIG)	D_Temp (F)	Insul Thk (mm)	Insul Thk (in)	Customer's PID No.	VPI PID's No.	Notes
LCA50BR020	CONDENSATE TO DA (BY OTHERS)	150	6	40	HDD	150#	SA-106 GR.B	DA	28	107	400	225	38	1.5	ABPR5-M-S-PD-0139	V17491-ICND-005	
LCA50BR030	CONDENSATE TO DA (BY OTHERS)	150	6	40	HDD	150#	SA-106 GR.B	DA	7	166	100	330	38	1.5	ABPR5-M-S-PD-0139	V17491-ICND-005	
LCA50BR510	CONDENSATE TO DA DRAIN (BY OTHERS)	25	1	80	HDD	150#	SA-106 GR.B	DA	28	107	400	225	38	1.5	ABPR5-M-S-PD-0139	V17491-ICND-005	
LCQ10BR001	HP BD COLLECTION HEADER	150	6	40	HDD	150#	SA-106 GR.B	BD	3	149	50	300	38	1.5	ABPR5-M-S-PD-0140	V17491-ICND-006	
LCQ10BR002	LP BD COLLECTION HEADER	150	6	40	HDD	150#	SA-106 GR.B	BD	3	149	50	300	38	1.5	ABPR5-M-S-PD-0140	V17491-ICND-006	
LCQ10BR003	HP BD COLLECTION HEADER	100	4	40	HDD	150#	SA-106 GR.B	BD	3	149	50	300	38	1.5	ABPR5-M-S-PD-0140	V17491-ICND-006	
LCQ10BR004	LP BD COLLECTION HEADER	80	3	40	HDD	150#	SA-106 GR.B	BD	3	149	50	300	25	1	ABPR5-M-S-PD-0140	V17491-ICND-006	
LCQ10BR005	BD TANK OVERFLOW	100	4	40	HDD	150#	SA-106 GR.B	BD	3	149	50	300	38	1.5	ABPR5-M-S-PD-0140	V17491-ICND-006	
LCQ10BR006	CUSTOMER SPARE	50	2	80	HDD	150#	SA-106 GR.B	BD	3	149	50	300	25	1	ABPR5-M-S-PD-0140	V17491-ICND-006	
LCQ10BR007	CUSTOMER SPARE	50	2	80	HDD	150#	SA-106 GR.B	BD	3	149	50	300	25	1	ABPR5-M-S-PD-0140	V17491-ICND-006	
LCQ10BR008	CUSTOMER SPARE	50	2	80	HDD	150#	SA-106 GR.B	BD	3	149	50	300	25	1	ABPR5-M-S-PD-0140	V17491-ICND-006	
LCQ10BR009	CUSTOMER SPARE	50	2	80	HDD	150#	SA-106 GR.B	BD	3	149	50	300	25	1	ABPR5-M-S-PD-0140	V17491-ICND-006	
LCQ10BR010	BD TANK VENT	200	8	40	HDD	150#	SA-106 GR.B	BD	3	149	50	300	38	1.5	ABPR5-M-S-PD-0140	V17491-ICND-006	
LCQ10BR501	BD TANK DRAIN	50	2	80	HDD	150#	SA-106 GR.B	BD	3	149	50	300	25	1	ABPR5-M-S-PD-0140	V17491-ICND-006	
LCQ10BR503	HP CONTINUOUS BLOWDOWN	50	2	40	GDD	300#	SA-106 GR.B	BD	41	252	600	486	51	2	ABPR5-M-S-PD-0140	V17491-ICND-006	
LCQ10BR504	LP CONTINUOUS BLOWDOWN	50	2	40	HDD	150#	SA-106 GR.B	BD	11	185	160	365	51	2	ABPR5-M-S-PD-0140	V17491-ICND-006	
LCQ10BR506	BD TANK COOLING WATER	50	2	80	HDD	150#	SA-106 GR.B	BD	3	149	50	300	25	1	ABPR5-M-S-PD-0140	V17491-ICND-006	
LCQ10BR701	BD TANK LEVEL GAUGE	40	1.5	80	HDD	150#	SA-106 GR.B	BD	3	149	50	300	25	1	ABPR5-M-S-PD-0140	V17491-ICND-006	
LCQ10BR702	BD TANK LEVEL GAUGE	40	1.5	80	HDD	150#	SA-106 GR.B	BD	3	149	50	300	25	1	ABPR5-M-S-PD-0140	V17491-ICND-006	
LCQ10BR703	BD TANK PRESSURE INDICATOR	20	0.75	80	HDD	150#	SA-106 GR.B	BD	3	149	50	300	25	1	ABPR5-M-S-PD-0140	V17491-ICND-006	
LCQ10BR704	BD TANK LEVEL GAUGE	40	1.5	80	HDD	150#	SA-106 GR.B	BD	3	149	50	300	25	1	ABPR5-M-S-PD-0140	V17491-ICND-006	
LCQ10BR705	BD TANK LEVEL GAUGE	40	1.5	80	HDD	150#	SA-106 GR.B	BD	3	149	50	300	25	1	ABPR5-M-S-PD-0140	V17491-ICND-006	
LCQ11BR501	HP FW INLET DRAIN TO BLOWDOWN TANK	25	1	80	GDD	300#	SA-106 GR.B	BD	41	252	600	486	25	1	ABPR5-M-S-PD-0140	V17491-ICND-006	
LCQ11BR502	HP MODULE DRAINS TO BLOWDOWN TANK	50	2	80	GDD	300#	SA-106 GR.B	BD	41	252	600	486	38	1.5	ABPR5-M-S-PD-0140	V17491-ICND-006	
LCQ11BR503	HP MODULE DRAINS TO BLOWDOWN TANK	50	2	80	GDD	300#	SA-106 GR.B	BD	41	252	600	486	38	1.5	ABPR5-M-S-PD-0140	V17491-ICND-006	
LCQ11BR504	HP MODULE DRAINS TO BLOWDOWN TANK	50	2	80	GDD	300#	SA-106 GR.B	BD	41	252	600	486	38	1.5	ABPR5-M-S-PD-0140	V17491-ICND-006	
LCQ11BR505	HP INTERMITTENT BLOWDOWN TO BLOWDOWN TANK	50	2	80	EDD	600#	SA-106 GR.B	BD	62	278	900	532	38	1.5	ABPR5-M-S-PD-0140	V17491-ICND-006	
LCQ11BR506	HPSH 3-2 XOVER DRAIN TO BLOWDOWN TANK	25	1	80	EDD	600#	SA-106 GR.B	BD	62	371	900	700	64	2.5	ABPR5-M-S-PD-0140	V17491-ICND-006	
LCQ11BR507	HP ATTEMP DRAIN POT DRAIN TO BLOWDOWN TANK	25	1	80	ECD	600#	SA-335 P11	BD	62	454	900	850	102	4	ABPR5-M-S-PD-0140	V17491-ICND-006	
LCQ11BR508	HPSH OUTLET DRAIN TO BLOWDOWN TANK	25	1	80	ECD	600#	SA-335 P11	BD	41	482	600	900	102	4	ABPR5-M-S-PD-0140	V17491-ICND-006	
LCQ11BR511	BD TANK LEVEL GAUGE DRAIN	15	0.5	80	HDD	150#	SA-106 GR.B	BD	3	149	50	300	25	1	ABPR5-M-S-PD-0140	V17491-ICND-006	
LCQ11BR512	BD TANK LEVEL GAUGE DRAIN	15	0.5	80	HDD	150#	SA-106 GR.B	BD	3	149	50	300	25	1	ABPR5-M-S-PD-0140	V17491-ICND-006	
LCQ11BR514	BD TANK DRAIN TO OVERFLOW	50	2	80	HDD	150#	SA-106 GR.B	BD	3	149	50	300	25	1	ABPR5-M-S-PD-0140	V17491-ICND-006	
LCQ11BR525	HPEC OUTLET TO DRUM DRAIN	25	1	80	GDD	300#	SA-106 GR.B	BD	41	252	600	486	38	1.5	ABPR5-M-S-PD-0137	V17491-ICND-003	
LCQ11BR531	HP FW SRV BODY DRAIN	15	0.5	80	GDD	300#	SA-106 GR.B	BD	13	177	191	600	0	0	ABPR5-M-S-PD-0140	V17491-ICND-006	
LCQ11BR901	HP FW SAFETY VALVE DISCHARGE TO BLOWDOWN TANK	80	3	40	GDD	300#	SA-106 GR.B	BD	20	316	287	600	76	3	ABPR5-M-S-PD-0140	V17491-ICND-006	
LCQ12BR501	LP FW INLET DRAIN TO BLOWDOWN TANK	25	1	80	GDD	300#	SA-106 GR.B	BD	17	204	250	400	38	1.5	ABPR5-M-S-PD-0140	V17491-ICND-006	
LCQ12BR502	LP FW SAFETY VALVE DISCHARGE TO BLOWDOWN TANK	80	3	40	GDD	300#	SA-106 GR.B	BD	17	204	250	400	38	1.5	ABPR5-M-S-PD-0140	V17491-ICND-006	
LCQ12BR503	LPEC MODULE DRAINS TO BLOWDOWN TANK	50	2	80	GDD	300#	SA-106 GR.B	BD	17	204	250	400	38	1.5	ABPR5-M-S-PD-0140	V17491-ICND-006	
LCQ12BR504	LP INTERMITTENT BLOWDOWN TO BLOWDOWN TANK	50	2	80	GDD	300#	SA-106 GR.B	BD	17	204	250	400	38	1.5	ABPR5-M-S-PD-0140	V17491-ICND-006	
LCQ12BR505	LPSH OUTLET DRAIN TO BLOWDOWN TANK	25	1	80	HDD	150#	SA-106 GR.B	BD	14	204	200	400	38	1.5	ABPR5-M-S-PD-0140	V17491-ICND-006	
LCQ13BR501	LP FW SRV BODY DRAIN	15	0.5	80	HDD	150#	SA-106 GR.B	BD	7	177	100	350	0	0	ABPR5-M-S-PD-0140	V17491-ICND-006	

LISTS

Vogt Power International, Inc. • 13551 Triton Park Blvd., Suite 2000 • Louisville, Kentucky 40223

TERMINAL POINT LIST
For
Vogt Power International Job 17491
Amata B. Grimm Power (Rayong) 5 Limited
Vogt Power Document No. V17491-ICNA-002

PREPARED BY: Rattiya Pimchaichon Product Engineer

REVIEWED BY: Poonsap Homniyom Project Engineer

APPROVED BY: Kelly Moody Director of Engineering

OWNER	**Amata B. Grimm Power (Rayong) 5 Limited**
PROJECT	**ABPR5 Combined Cycle Cogeneration Plant Project**
CONTRACTOR	Sumitomo Corporation
TITLE	**TERMINAL POINT LIST**
PROJECT CONTROL NO.	ABPR5-M-S-HA-1002 REV. 00

Rev.	Date	Engineer	Comments
0	08 Aug 2016	R. Pimchaichon	Original Issue
1	06 Dec 2016	R. Pimchaichon	General Update

LISTS

Vogt Power International, Inc. • 13551 Triton Park Blvd., Suite 2000 • Louisville, Kentucky 40223

DEFINITIONS

Terminal Number - "T" is for terminal point, "T-XXX" is the terminal number where:

001-099 = HP System

101-199 = LP System

201-299 = Deaerator System

301-399 = BD Tank System

401-499 = HRSG

Line Number – Additional information for each Terminal Point is found on Vogt Power P&ID Drawings No. V17491-ICND-001 through 006, and sorted by Line Number.

Service - Describes the use or type of line, i.e., drain, vent, etc.

Line Size/ Schedule - Describes the nominal pipe size and schedule of the line used up to or at the terminal point. The actual terminal point may be a valve or pipe end.

Pipe Material - Describes the material at the terminal point, pipe materials are specified here. If the terminal point is a valve, the valve material shall be of a suitable material for interfacing with the specified pipe material.

Type of Connection - Denotes whether the terminal point is a butt-weld (BW), socket-weld (SW), flanged (FLGD), threaded (FNPT / MNPT), or a tube socket-weld (TSW) connection.

End Preparation – For BW connections the type of end preparation to prepare for welding shall be in accordance with drawing V17491-EBND-TBD.

Coordinates - The terminal coordinates are provided for all terminal points which interface with Balance of Plant Piping, by others. All dimensions are in millimeters.

The "XYZ" coordinates are defined as follows:

X distance perpendicular to the gas flow measured from the centerline of the HRSG. Positive number is in the direction of the right side of the HRSG (from CT to stack).

Y distance in the direction of gas flow, zero point is at the centerline of column line D. Positive number is in the direction of gas flow toward stack, negative is toward Combustion Turbine.

Z elevation above/below Vogt Reference Elevation of zero. Vogt Reference Elevation of zero corresponds to Top of Concrete / Bottom of Grout.

Vogt Power International
TERMINAL POINT LIST

Terminal Point Number	Line Number	Service	Line Size (DN)	Line Size (NPS)	Line Schedule	Line Material	ANSI Class	Conn Type	D_Press_Bar	D_Temp_C	D_Press_PSIG	D_Temp_F	Right +X (mm)	Gas Flow +Y (mm)	Vert. +Z (mm)	Right +X (in)	Gas Flow +Y (in)	Vert. +Z (in)	Notes
[illegible]	[illegible]	[illegible]	[illegible]	[illegible]	[illegible]	[illegible]	[illegible]	[illegible]	108	304	1565	579	[illegible]	[illegible]	[illegible]	[illegible]	[illegible]	[illegible]	
[illegible]	[illegible]	[illegible]	[illegible]	[illegible]	[illegible]	[illegible]	[illegible]	[illegible]	[illegible]	[illegible]	[illegible]	[illegible]	-2470	5709	1019	-97.25	224.75	40.13	
[illegible]	[illegible]	[illegible]	[illegible]	[illegible]	[illegible]	[illegible]	[illegible]	[illegible]	[illegible]	[illegible]	[illegible]	[illegible]	[illegible]	[illegible]	[illegible]	[illegible]	[illegible]	[illegible]	[illegible]

VALVE LIST

For

ABPR5 Combined Cycle Cogeneration Plant Project

For

Vogt Power International Job 17491

Amata B.Grimm Power (Rayong) 5 Limited

Vogt Power Document No. V17491-ICNA-003

PREPARED BY: Rattiya Pimchaichon Product Engineer

REVIEWED BY: Poonsap Homniyom Project Engineer

Kelly Moody Director of Engineering

Rev.	Date	Engineer	Comments
0	26 Aug 2016	R. Pimchaichon	Initial Issue
1	22 Dec 2016	R. Pimchaichon	Customer Comments and Updated per FGH Line Relocation.
2	9 Feb 2017	R. Pimchaichon	Customer Comments

OWNER		
Amata B.Grimm Power (Rayong) 5 Limited		
PROJECT		
ABPR5 Combined Cycle Cogeneration Plant Project		
CONTRACTOR		
Sumitomo Corporation		
TITLE		
HRSG VALVE LIST		
PROJECT CONTROL NO.	ABPR5-K-S-HA-1003	REV. 00

1.0. DESCRIPTION OF VALVE DESIGNATIONS

Note: Valve List is sorted by Line Number, and correlates to P&ID V17491-ICND-002 through 006

1.1 Manual Valve Tag Number

All tags are to be preceded with unit number "51" or "52" to represent the two units respectively, "05" for the deaerator system, and "50" for the condensate system.

AAA = SYSTEM ID

GCQ = Injection System For Main Fluid
HAC = Economizer System
HAD = Drum / Evaporator System
HAH = Superheater System
HAN = Pressure System Drainage and Venting
HNA = Ductwork System (Exhaust Gas Side of HRSG)
HNB = Bypass Damper
HNE = HRSG Exhaust Stack
LAA = Deaerator
LAB = Feedwater
LAC = Feedwater Pumps & Heat Exchanger
LAE = Attemperator (Desuperheater)
LBA = Main Steam Piping
LBG = Auxiliary Steam Piping
LBH = Blowdown Tank
LCA = Main Condensate Piping
LCQ = Blowdown System
PGA = Cooling Water System

BB = SUB SYSTEM ID

10 = HP System
20 = HP System
30 = Not Used
40 = Not Used
50 = LP System

CC = ITEM TYPE CODE

AA = Valves
AC = Heat Exchanger / Attemperator
AT = Strainer / Separator
AP = Pumps
BB = Drum / Condensate Pots
BR = Lines
BS = Silencers
BU = Burner
CF = Flow Devices
CL = Level Devices
CG = Position Measurement

CP = Pressure Devices
CQ = Quality Variables
CT = Temperature Devices
CY = Vibration Devices

DDD = ITEM NUMBERING

"AA" Piping
001-099 = Valves, General
101-199 = Motor Valves
201-299 = Valves w/ Pneumatic & Magnetic Actuators
301-399 = Hydraulic Valves
401-499 = Spring Operated Valves (Safety Valves)
501-599 = Drain Valves
601-699 = Vent Valves
701-799 = Impulse Line Valves
801-899 = Sampling & Dosing Valves
901-999 = Expansion Joint, Bellows, & Trap

X = Pressure Class Identifier

A = 4500#
B = 2500#
C = 1500#
D = 900#
E = 600#
G = 300#
H = 150#
X = No Class Required (Non Pressure Part)

Y = Material Type Identifier

A = SA-335 P-91
B = SA-335 P-22
C = SA-335 P-11
D = SA-106 Grade B
E = SA-106 Grade C
G = A-312 Type 316 SS
H = A-312 Type 316H SS
J = A-312 Type 304 SS
K = A-312 Type 304H SS

Z = Code Class Identifier

K = ASME Section I (Section I Jurisdiction/Tech - Boiler Proper)
H = ASME Section I (includes Section I Jurisdiction/ASME B31.1 Tech. - Boiler External Piping)
D = ASME B31.1
M = ASME Section VIII
T = ASME B31.3
X = Non-Code/Non Pressure Retaining

1.2 Size

Size is Nominal Pipe Size in inches (NPS). Valves 2½" and larger are large-bore. Valves 2" and smaller are small-bore.

Large bore valves are typically butt-welded into the piping system. Code requires the valve end schedule to match the piping schedule. All pipe schedules are given in the Line List.

Small-bore valves are typically socket-welded and pipe schedule is not required.

1.3 ANSI Class

Based on ASME B16.34 for design conditions as given in the Line List, but may be Special or Limited Class as designated by valve vendor.

1.4 Valve Material

Chemical composition generally should match piping material, but may have a safe end or other method to avoid forcing erection contractor to make dissimilar welds in the field. The material information in this list gives ASTM material specifications for valves, which reflect their fabrication by forging or casting, and are different from ASTM piping material specifications.

1.5 Manufacturer, Model

Will be furnished once vendors are selected and drawings are received.

1.6 Operator Type

Valves are manually operated unless noted. "Check" valves have no means of operation. "Stop-check" valves combine a manual stop function and a check function.

1.7 Fail Position

Fail position (Open, Closed, or In-Place) is noted for all motor and air-operated valves.

Valve_Tag	Line_Tag	Service	Sys	Valve_Size (DN)	Valve_Size	Ansi_Class	Customer's Valve Abbr.	Type	Valve_Matl	Customer's Oper. Abbr.	Oper_Type	Connection Type	Manuf	Model_No	D_Press_BARG	D_Temp_C	D_Press_PSI	D_Temp_F	Customer's PID No.	VPI PID's No.	Notes
HAC20AA025	HAC20BR025	FUEL GAS PREHEATER	HP	50	2	1500#	GV	GATE	SA-105	H	MANUAL	SW	TBD	TBD	132	333	1910	631	ABPR5-M-S-PD-0137	V17491-ICND-003	
HAC20AA026	HAC20BR025	FUEL GAS PREHEATER	HP	50	2	1500#	GV	GATE	SA-105	H	MANUAL	SW	TBD	TBD	132	333	1910	631	ABPR5-M-S-PD-0137	V17491-ICND-003	
HAC20AA101	HAC20BR614	HPEC MODULE VENT HEADER	HP	50	2	1690#	YG	GLOBE	SA-105	MO	MOTOR	SW	TBD	TBD	132	333	1910	631	ABPR5-M-S-PD-0137	V17491-ICND-003	
HAC20AA201	HAC20BR014	HP DRUM LEVEL CONTROL VALVE	HP	100	4	1500#	DV	CNTRL	A216 WCC	AM	CYLINDER	BW	TBD	TBD	132	333	1910	631	ABPR5-M-S-PD-0138	V17491-ICND-004	
HAC20AA501	HAC20BR501	HPEC DRAIN	HP	25	1	1500#	GV	GLOBE	SA-105	H	MANUAL	SW	TBD	TBD	132	333	1910	631	ABPR5-M-S-PD-0137	V17491-ICND-003	
HAC20AA502	HAC20BR502	HPEC DRAIN	HP	25	1	1500#	GV	GLOBE	SA-105	H	MANUAL	SW	TBD	TBD	132	333	1910	631	ABPR5-M-S-PD-0137	V17491-ICND-003	
HAC20AA503	HAC20BR503	HPEC DRAIN	HP	25	1	1500#	GV	GLOBE	SA-105	H	MANUAL	SW	TBD	TBD	132	333	1910	631	ABPR5-M-S-PD-0137	V17491-ICND-003	
HAC20AA504	HAC20BR504	HPEC DRAIN	HP	25	1	1500#	GV	GLOBE	SA-105	H	MANUAL	SW	TBD	TBD	132	333	1910	631	ABPR5-M-S-PD-0137	V17491-ICND-003	
HAC20AA505	HAC20BR505	HPEC DRAIN	HP	25	1	1500#	GV	GLOBE	SA-105	H	MANUAL	SW	TBD	TBD	132	333	1910	631	ABPR5-M-S-PD-0137	V17491-ICND-003	
HAC20AA506	HAC20BR506	HPEC DRAIN	HP	25	1	1500#	GV	GLOBE	SA-105	H	MANUAL	SW	TBD	TBD	132	333	1910	631	ABPR5-M-S-PD-0137	V17491-ICND-003	
HAC20AA507	HAC20BR507	HPEC DRAIN	HP	25	1	1500#	GV	GLOBE	SA-105	H	MANUAL	SW	TBD	TBD	132	333	1910	631	ABPR5-M-S-PD-0137	V17491-ICND-003	
HAC20AA508	HAC20BR508	HPEC DRAIN	HP	25	1	1500#	GV	GLOBE	SA-105	H	MANUAL	SW	TBD	TBD	132	333	1910	631	ABPR5-M-S-PD-0137	V17491-ICND-003	
HAC20AA509	HAC20BR509	HPEC DRAIN	HP	25	1	1500#	GV	GLOBE	SA-105	H	MANUAL	SW	TBD	TBD	132	333	1910	631	ABPR5-M-S-PD-0137	V17491-ICND-003	
HAC20AA510	HAC20BR510	HPEC DRAIN	HP	25	1	1500#	GV	GLOBE	SA-105	H	MANUAL	SW	TBD	TBD	132	333	1910	631	ABPR5-M-S-PD-0137	V17491-ICND-003	
HAC20AA511	HAC20BR511	HPEC DRAIN	HP	25	1	1500#	GV	GLOBE	SA-105	H	MANUAL	SW	TBD	TBD	132	333	1910	631	ABPR5-M-S-PD-0137	V17491-ICND-003	
HAC20AA512	HAC20BR512	HPEC DRAIN	HP	25	1	1500#	GV	GLOBE	SA-105	H	MANUAL	SW	TBD	TBD	132	333	1910	631	ABPR5-M-S-PD-0137	V17491-ICND-003	
HAC20AA513	HAC20BR513	HPEC DRAIN	HP	25	1	1500#	GV	GLOBE	SA-105	H	MANUAL	SW	TBD	TBD	132	333	1910	631	ABPR5-M-S-PD-0137	V17491-ICND-003	
HAC20AA514	HAC20BR514	HPEC DRAIN COLLECTION	HP	50	2	1500#	GV	GLOBE	SA-105	H	MANUAL	SW	TBD	TBD	132	333	1910	631	ABPR5-M-S-PD-0137	V17491-ICND-003	
HAC20AA515	HAC20BR515	HPEC DRAIN COLLECTION	HP	50	2	1500#	GV	GLOBE	SA-105	H	MANUAL	SW	TBD	TBD	132	333	1910	631	ABPR5-M-S-PD-0137	V17491-ICND-003	
HAC20AA516	HAC20BR516	HPEC DRAIN COLLECTION	HP	50	2	1500#	GV	GLOBE	SA-105	H	MANUAL	SW	TBD	TBD	132	333	1910	631	ABPR5-M-S-PD-0137	V17491-ICND-003	
HAC20AA518	HAC20BR518	HPEC FUEL GAS PREHEATER DRAIN	HP	25	1	1500#	GV	GLOBE	SA-106	H	MANUAL	SW	TBD	TBD	132	333	1910	631	ABPR5-M-S-PD-0137	V17491-ICND-003	
HAC20AA525	HAC20BR525	HPEC OUTLET DRAIN	HP	25	1	1500#	GV	GLOBE	SA-105	H	MANUAL	SW	TBD	TBD	108	304	1565	579	ABPR5-M-S-PD-0137	V17491-ICND-003	
HAC20AA526	HAC20BR525	HPEC OUTLET DRAIN	HP	25	1	1500#	GV	GLOBE	SA-105	H	MANUAL	SW	TBD	TBD	108	304	1565	579	ABPR5-M-S-PD-0137	V17491-ICND-003	
HAC20AA601	HAC20BR601	HPEC VENT	HP	25	1	1500#	GV	GLOBE	SA-105	H	MANUAL	SW	TBD	TBD	132	333	1910	631	ABPR5-M-S-PD-0137	V17491-ICND-003	
HAC20AA602	HAC20BR602	HPEC VENT	HP	25	1	1500#	GV	GLOBE	SA-105	H	MANUAL	SW	TBD	TBD	132	333	1910	631	ABPR5-M-S-PD-0137	V17491-ICND-003	
HAC20AA603	HAC20BR603	HPEC VENT	HP	25	1	1500#	GV	GLOBE	SA-105	H	MANUAL	SW	TBD	TBD	132	333	1910	631	ABPR5-M-S-PD-0137	V17491-ICND-003	
HAC20AA604	HAC20BR604	HPEC VENT	HP	25	1	1500#	GV	GLOBE	SA-105	H	MANUAL	SW	TBD	TBD	132	333	1910	631	ABPR5-M-S-PD-0137	V17491-ICND-003	
HAC20AA605	HAC20BR605	HPEC VENT	HP	25	1	1500#	GV	GLOBE	SA-105	H	MANUAL	SW	TBD	TBD	132	333	1910	631	ABPR5-M-S-PD-0137	V17491-ICND-003	
HAC20AA606	HAC20BR606	HPEC VENT	HP	25	1	1500#	GV	GLOBE	SA-105	H	MANUAL	SW	TBD	TBD	132	333	1910	631	ABPR5-M-S-PD-0137	V17491-ICND-003	
HAC20AA607	HAC20BR607	HPEC VENT	HP	25	1	1500#	GV	GLOBE	SA-105	H	MANUAL	SW	TBD	TBD	132	333	1910	631	ABPR5-M-S-PD-0137	V17491-ICND-003	
HAC20AA608	HAC20BR608	HPEC VENT	HP	25	1	1500#	GV	GLOBE	SA-105	H	MANUAL	SW	TBD	TBD	132	333	1910	631	ABPR5-M-S-PD-0137	V17491-ICND-003	
HAC20AA609	HAC20BR609	HPEC VENT	HP	25	1	1500#	GV	GLOBE	SA-105	H	MANUAL	SW	TBD	TBD	132	333	1910	631	ABPR5-M-S-PD-0137	V17491-ICND-003	
HAC20AA610	HAC20BR610	HPEC VENT	HP	25	1	1500#	GV	GLOBE	SA-105	H	MANUAL	SW	TBD	TBD	132	333	1910	631	ABPR5-M-S-PD-0137	V17491-ICND-003	
HAC20AA611	HAC20BR611	HPEC VENT	HP	25	1	1500#	GV	GLOBE	SA-105	H	MANUAL	SW	TBD	TBD	132	333	1910	631	ABPR5-M-S-PD-0137	V17491-ICND-003	
HAC20AA612	HAC20BR612	HPEC VENT	HP	25	1	1500#	GV	GLOBE	SA-105	H	MANUAL	SW	TBD	TBD	132	333	1910	631	ABPR5-M-S-PD-0137	V17491-ICND-003	
HAC20AA613	HAC20BR613	HPEC VENT	HP	25	1	1500#	GV	GLOBE	SA-105	H	MANUAL	SW	TBD	TBD	132	333	1910	631	ABPR5-M-S-PD-0137	V17491-ICND-003	
HAC21AA801	HAC21BR801	HP CHEMICAL FEED	HP	25	1	1500#	GV	GLOBE	SA-105	H	MANUAL	SW	TBD	TBD	108	304	1565	579	ABPR5-M-S-PD-0137	V17491-ICND-003	
HAC21AA802	HAC21BR801	HP CHEMICAL FEED	HP	25	1	1500#	-	STOPCHECK	SA-105	H	MANUAL	SW	TBD	TBD	108	304	1565	579	ABPR5-M-S-PD-0137	V17491-ICND-003	
HAC50AA001	HAC50BR004	LPEC TO DA	LPEC	80	3	300#	WG	GATE	A216 WCB	H	MANUAL	BW	TBD	TBD	29	234	425	454	ABPR5-M-S-PD-0139	V17491-ICND-004	
HAC50AA101	HAC50BR605	LPEC MODULE VENT HEADER	LPEC	50	2	1690#	YG	GLOBE	SA-105	MO	MOTOR	SW	TBD	TBD	29	234	425	454	ABPR5-M-S-PD-0139	V17491-ICND-004	
HAC50AA201	HAC50BR002	LP DRUM LEVEL CONTROL VALVE	LPEC	40	1.5	300#	DV	CNTRL	A216 WCC	AM	CYLINDER	SW	TBD	TBD	29	234	425	454	ABPR5-M-S-PD-0139	V17491-ICND-004	
HAC50AA501	HAC50BR501	LPEC DRAIN	LPEC	25	1	800#	GV	GLOBE	SA-105	H	MANUAL	SW	TBD	TBD	29	234	425	454	ABPR5-M-S-PD-0139	V17491-ICND-004	
HAC50AA502	HAC50BR502	LPEC DRAIN	LPEC	25	1	800#	GV	GLOBE	SA-105	H	MANUAL	SW	TBD	TBD	29	234	425	454	ABPR5-M-S-PD-0139	V17491-ICND-004	
HAC50AA503	HAC50BR503	LPEC DRAIN	LPEC	25	1	800#	GV	GLOBE	SA-105	H	MANUAL	SW	TBD	TBD	29	234	425	454	ABPR5-M-S-PD-0139	V17491-ICND-004	
HAC50AA504	HAC50BR504	LPEC DRAIN	LPEC	25	1	800#	GV	GLOBE	SA-105	H	MANUAL	SW	TBD	TBD	29	234	425	454	ABPR5-M-S-PD-0139	V17491-ICND-004	
HAC50AA505	HAC50BR505	LPEC DRAIN COLLECTION	LPEC	50	2	800#	GV	GLOBE	SA-105	H	MANUAL	SW	TBD	TBD	29	234	425	454	ABPR5-M-S-PD-0139	V17491-ICND-004	
HAC50AA601	HAC50BR601	LPEC VENT	LPEC	25	1	1690#	YG	GLOBE	SA-105	H	MANUAL	SW	TBD	TBD	29	234	425	454	ABPR5-M-S-PD-0139	V17491-ICND-004	
HAC50AA602	HAC50BR602	LPEC VENT	LPEC	25	1	1690#	YG	GLOBE	SA-105	H	MANUAL	SW	TBD	TBD	29	234	425	454	ABPR5-M-S-PD-0139	V17491-ICND-004	
HAC50AA603	HAC50BR603	LPEC VENT	LPEC	25	1	1690#	YG	GLOBE	SA-105	H	MANUAL	SW	TBD	TBD	29	234	425	454	ABPR5-M-S-PD-0139	V17491-ICND-004	
HAC50AA604	HAC50BR604	LPEC VENT	LPEC	25	1	1690#	YG	GLOBE	SA-105	H	MANUAL	SW	TBD	TBD	29	234	425	454	ABPR5-M-S-PD-0139	V17491-ICND-004	
HAC50AA801	HAC50BR801	LP CHEMICAL FEED	LP	25	1	800#	-	STOPCHECK	SA-105	H	MANUAL	SW	TBD	TBD	19	213	275	415	ABPR5-M-S-PD-0139	V17491-ICND-004	
HAC50AA802	HAC50BR801	LP CHEMICAL FEED	LP	25	1	800#	GV	GLOBE	SA-105	H	MANUAL	SW	TBD	TBD	19	213	275	415	ABPR5-M-S-PD-0139	V17491-ICND-004	
HAD10AA101	HAD10BR601	HP DRUM VENT	HP	25	1	1690#	YG	GLOBE	SA-105	MO	MOTOR	SW	TBD	TBD	90	304	1300	579	ABPR5-M-S-PD-0137	V17491-ICND-003	
HAD10AA102	HAD10BR504	HP INTERMITTENT BLOWDOWN	HP	50	2	1500#	GV	GLOBE	SA-105	MO	MOTOR	SW	TBD	TBD	108	306	1565	583	ABPR5-M-S-PD-0137	V17491-ICND-003	PER ASME B31.1 PARA 122.1.7.C.2
HAD10AA201	HAD10BR501	HP CONTINUOUS BLOWDOWN	HP	50	2	900#	A	CNTRL	A216 WCC	AM	CYLINDER	SW	TBD	TBD	108	306	1565	583	ABPR5-M-S-PD-0137	V17491-ICND-003	
HAD10AA401	HAD10BR901	HP DRUM SAFETY VALVE #1	HP	65	2.5	1500#	SV	SAFETY VALVE (ANGLE)	A216 WCC	SR	SELF REG.	BW	TBD	TBD	90	304	1300	579	ABPR5-M-S-PD-0137	V17491-ICND-003	
HAD10AA501	HAD10BR501	HP CONTINUOUS BLOWDOWN (ISOLATION)	HP	50	2	1690#	YG	GLOBE	SA-105	H	MANUAL	SW	TBD	TBD	92	306	1340	583	ABPR5-M-S-PD-0137	V17491-ICND-003	
HAD10AA502	HAD10BR503	HP DRUM WATER COLUMN DRAIN	HP	20	0.75	1500#	GV	GLOBE	SA-105	H	MANUAL	SW	TBD	TBD	92	306	1340	583	ABPR5-M-S-PD-0137	V17491-ICND-003	
HAD10AA503	HAD10BR503	HP DRUM WATER COLUMN DRAIN	HP	20	0.75	1500#	GV	GLOBE	SA-105	H	MANUAL	SW	TBD	TBD	92	306	1340	583	ABPR5-M-S-PD-0137	V17491-ICND-003	
HAD10AA504	HAD10BR502	HP DRUM LEVEL GAUGE DRAIN	HP	15	0.5	1500#	GV	GLOBE	SA-105	H	MANUAL	SW	TBD	TBD	92	306	1340	583	ABPR5-M-S-PD-0137	V17491-ICND-003	
HAD10AA505	HAD10BR504	HP INTERMITTENT BLOWDOWN	HP	50	2	1500#	GV	GLOBE	SA-105	H	MANUAL	SW	TBD	TBD	108	306	1565	583	ABPR5-M-S-PD-0137	V17491-ICND-003	PER ASME B31.1 PARA 122.1.7.C.2
HAD10AA601	HAD10BR601	HP DRUM VENT	HP	25	1	1500#	GV	GLOBE	SA-105	H	MANUAL	SW	TBD	TBD	90	304	1300	579	ABPR5-M-S-PD-0137	V17491-ICND-003	
HAD10AA602	HAD10BR602	HP DRUM N2	HP	25	1	1500#	-	STOPCHECK	SA-105	H	MANUAL	SW	TBD	TBD	90	304	1300	579	ABPR5-M-S-PD-0137	V17491-ICND-003	
HAD10AA701	HAD10BR701	HP DRUM LEVEL TRANSMITTER	HP	25	1	1500#	WG	GATE	SA-105	H	MANUAL	SW	TBD	TBD	92	306	1340	583	ABPR5-M-S-PD-0137	V17491-ICND-003	WITH LOCKING DEVICE
HAD10AA702	HAD10BR701	HP DRUM LEVEL TRANSMITTER	HP	25	1	1500#	WG	GATE	SA-105	H	MANUAL	SW	TBD	TBD	92	306	1340	583	ABPR5-M-S-PD-0137	V17491-ICND-003	WITH LOCKING DEVICE
HAD10AA703	HAD10BR702	HP DRUM LEVEL TRANSMITTER	HP	25	1	1500#	WG	GATE	SA-105	H	MANUAL	SW	TBD	TBD	92	306	1340	583	ABPR5-M-S-PD-0137	V17491-ICND-003	WITH LOCKING DEVICE
HAD10AA704	HAD10BR702	HP DRUM LEVEL TRANSMITTER	HP	25	1	1500#	WG	GATE	SA-105	H	MANUAL	SW	TBD	TBD	92	306	1340	583	ABPR5-M-S-PD-0137	V17491-ICND-003	WITH LOCKING DEVICE
HAD10AA705	HAD10BR703	HP DRUM LEVEL TRANSMITTER	HP	25	1	1500#	WG	GATE	SA-105	H	MANUAL	SW	TBD	TBD	92	306	1340	583	ABPR5-M-S-PD-0137	V17491-ICND-003	WITH LOCKING DEVICE
HAD10AA706	HAD10BR703	HP DRUM LEVEL TRANSMITTER	HP	25	1	1500#	WG	GATE	SA-105	H	MANUAL	SW	TBD	TBD	92	306	1340	583	ABPR5-M-S-PD-0137	V17491-ICND-003	WITH LOCKING DEVICE
HAD10AA707	HAD10BR704	HP DRUM LEVEL TRANSMITTER	HP	25	1	1500#	WG	GATE	SA-105	H	MANUAL	SW	TBD	TBD	92	306	1340	583	ABPR5-M-S-PD-0137	V17491-ICND-003	WITH LOCKING DEVICE
HAD10AA708	HAD10BR704	HP DRUM LEVEL TRANSMITTER	HP	25	1	1500#	WG	GATE	SA-105	H	MANUAL	SW	TBD	TBD	92	306	1340	583	ABPR5-M-S-PD-0137	V17491-ICND-003	WITH LOCKING DEVICE
HAD10AA709	HAD10BR705	HP DRUM LEVEL GAUGE	HP	40	1.5	1500#	WG	GATE	SA-105	H	MANUAL	SW	TBD	TBD	92	306	1340	583	ABPR5-M-S-PD-0137	V17491-ICND-003	WITH LOCKING DEVICE
HAD10AA710	HAD10BR705	HP DRUM LEVEL GAUGE	HP	40	1.5	1500#	WG	GATE	SA-105	H	MANUAL	SW	TBD	TBD	92	306	1340	583	ABPR5-M-S-PD-0137	V17491-ICND-003	WITH LOCKING DEVICE
HAD10AA711	HAD10BR706	HP DRUM LEVEL GAUGE	HP	40	1.5	1500#	WG	GATE	SA-105	H	MANUAL	SW	TBD	TBD	92	306	1340	583	ABPR5-M-S-PD-0137	V17491-ICND-003	WITH LOCKING DEVICE
HAD10AA712	HAD10BR706	HP DRUM LEVEL GAUGE	HP	40	1.5	1500#	WG	GATE	SA-105	H	MANUAL	SW	TBD	TBD	92	306	1340	583	ABPR5-M-S-PD-0137	V17491-ICND-003	WITH LOCKING DEVICE
HAD10AA713	HAD10BR709	HP DRUM PRESSURE TRANSMITTER	HP	20	0.75	1500#	GV	GLOBE	SA-105	H	MANUAL	SW	TBD	TBD	90	304	1300	579	ABPR5-M-S-PD-0137	V17491-ICND-003	
HAD10AA714	HAD10BR709	HP DRUM PRESSURE TRANSMITTER	HP	20	0.75	1500#	GV	GLOBE	SA-105	H	MANUAL	SW	TBD	TBD	90	304	1300	579	ABPR5-M-S-PD-0137	V17491-ICND-003	
HAD10AA715	HAD10BR710	HP DRUM PRESSURE TRANSMITTER	HP	20	0.75	1500#	GV	GLOBE	SA-105	H	MANUAL	SW	TBD	TBD	90	304	1300	579	ABPR5-M-S-PD-0137	V17491-ICND-003	
HAD10AA716	HAD10BR710	HP DRUM PRESSURE TRANSMITTER	HP	20	0.75	1500#	GV	GLOBE	SA-105	H	MANUAL	SW	TBD	TBD	90	304	1300	579	ABPR5-M-S-PD-0137	V17491-ICND-003	
HAD10AA718	HAD10BR711	HP DRUM PRESSURE INDICATOR	HP	20	0.75	1500#	GV	GLOBE	SA-105	H	MANUAL	SW	TBD	TBD	90	304	1300	579	ABPR5-M-S-PD-0137	V17491-ICND-003	
HAD10AA719	HAD10BR711	HP DRUM PRESSURE INDICATOR	HP	20	0.75	1500#	GV	GLOBE	SA-105	H	MANUAL	SW	TBD	TBD	90	304	1300	579	ABPR5-M-S-PD-0137	V17491-ICND-003	
HAD10AA720	HAD10BR712	HP DRUM PRESSURE INDICATOR TEST	HP	15	0.5	2500#	GV	GLOBE	SA-105	H	MANUAL	SW	TBD	TBD	90	304	1300	579	ABPR5-M-S-PD-0137	V17491-ICND-003	I&C TEST VALVE

Valve_Tag	Line_Tag	Service	Sys	Valve_Size (DN)	Valve_Size	Ansi_Class	Customer's Valve Abbr.	Type	Valve_Matl	Customer's Oper. Abbr.	Oper_Type	Connection Type	Manuf	Model_No	D_Press_BARG	D_Temp_C	D_Press_PSI	D_Temp_F	Customer's PID No.	VPI PID's No.	Notes
HAD10AA721	HAD10BR713	HP DRUM LEVEL TRANSMITTER	HP	25	1	1500#	WG	GATE	SA-105	H	MANUAL	SW	TBD	TBD	92	306	1340	583	ABPR5-M-S-PD-0137	V17491-ICND-003	WITH LOCKING DEVICE
HAD10AA722	HAD10BR713	HP DRUM LEVEL TRANSMITTER	HP	25	1	1500#	WG	GATE	SA-105	H	MANUAL	SW	TBD	TBD	92	306	1340	583	ABPR5-M-S-PD-0137	V17491-ICND-003	WITH LOCKING DEVICE
HAD10AA723	HAD10BR714	HP DRUM LEVEL TRANSMITTER	HP	25	1	1500#	WG	GATE	SA-105	H	MANUAL	SW	TBD	TBD	92	306	1340	583	ABPR5-M-S-PD-0137	V17491-ICND-003	WITH LOCKING DEVICE
HAD10AA724	HAD10BR714	HP DRUM LEVEL TRANSMITTER	HP	25	1	1500#	WG	GATE	SA-105	H	MANUAL	SW	TBD	TBD	92	306	1340	583	ABPR5-M-S-PD-0137	V17491-ICND-003	WITH LOCKING DEVICE
HAD10AA801	HAD10BR801	HP DRUM SAMPLE	HP	20	0.75	1500#	GV	GLOBE	SA-105	H	MANUAL	SW	TBD	TBD	92	306	1340	583	ABPR5-M-S-PD-0137	V17491-ICND-003	
HAD10AA802	HAD10BR801	HP DRUM SAMPLE	HP	20	0.75	1500#	GV	GLOBE	SA-105	H	MANUAL	SW	TBD	TBD	92	306	1340	583	ABPR5-M-S-PD-0137	V17491-ICND-003	
HAD50AA101	HAD50BR601	LP DRUM VENT	LP	25	1	1690#	YG	GLOBE	SA-105	MO	MOTOR	SW	TBD	TBD	12	193	180	380	ABPR5-M-S-PD-0139	V17491-ICND-004	
HAD50AA102	HAD50BR504	LP INTERMITTENT BLOWDOWN	LP	50	2	1500#	GV	GLOBE	SA-105	MO	MOTOR	SW	TBD	TBD	19	202	275	396	ABPR5-M-S-PD-0139	V17491-ICND-004	PER ASME B31.1 PARA 122.1.7.C.2
HAD50AA201	HAD50BR501	LP CONTINUOUS BLOWDOWN	LP	50	2	300#	A	CNTRL	A216 WCC	AM	CYLINDER	SW	TBD	TBD	15	202	220	396	ABPR5-M-S-PD-0139	V17491-ICND-004	
HAD50AA401	HAD50BR901	LP DRUM SAFETY VALVE #1	LP	40	1.5	300#	SV	SAFETY VALVE (ANGLE)	A216 WCC	SR	SELF REG.	FLG	TBD	TBD	12	193	180	380	ABPR5-M-S-PD-0139	V17491-ICND-004	
HAD50AA402	HAD50BR902	LP DRUM SAFETY VALVE #2	LP	40	1.5	300#	SV	SAFETY VALVE (ANGLE)	A216 WCC	SR	SELF REG.	FLG	TBD	TBD	12	193	180	380	ABPR5-M-S-PD-0139	V17491-ICND-004	
HAD50AA501	HAD50BR501	LP CONTINUOUS BLOWDOWN (ISOLATION)	LP	50	2	800#	GV	GLOBE	SA-105	H	MANUAL	SW	TBD	TBD	15	202	220	396	ABPR5-M-S-PD-0139	V17491-ICND-004	
HAD50AA502	HAD50BR503	LP WATER COLUMN DRAIN	LP	20	0.75	800#	GV	GLOBE	SA-105	H	MANUAL	SW	TBD	TBD	15	202	220	396	ABPR5-M-S-PD-0139	V17491-ICND-004	
HAD50AA503	HAD50BR503	LP WATER COLUMN DRAIN	LP	20	0.75	800#	GV	GLOBE	SA-105	H	MANUAL	SW	TBD	TBD	15	202	220	396	ABPR5-M-S-PD-0139	V17491-ICND-004	
HAD50AA504	HAD50BR502	LP LEVEL GAUGE DRAIN	LP	15	0.5	800#	GV	GLOBE	SA-105	H	MANUAL	SW	TBD	TBD	15	202	220	396	ABPR5-M-S-PD-0139	V17491-ICND-004	
HAD50AA505	HAD50BR504	LP INTERMITTENT BLOWDOWN	LP	50	2	800#	GV	GLOBE	SA-105	H	MANUAL	SW	TBD	TBD	19	202	275	396	ABPR5-M-S-PD-0139	V17491-ICND-004	PER ASME B31.1 PARA 122.1.7.C.2
HAD50AA601	HAD50BR601	LP DRUM VENT	LP	25	1	1690#	YG	GLOBE	SA-105	H	MANUAL	SW	TBD	TBD	12	193	180	380	ABPR5-M-S-PD-0139	V17491-ICND-004	
HAD50AA602	HAD50BR602	LP DRUM N2	LP	25	1	800#	-	STOPCHECK	SA-105	H	MANUAL	SW	TBD	TBD	12	193	180	380	ABPR5-M-S-PD-0139	V17491-ICND-004	
HAD50AA701	HAD50BR701	LP DRUM LEVEL TRANSMITTER	LP	25	1	800#	WG	GATE	SA-105	H	MANUAL	SW	TBD	TBD	15	202	220	396	ABPR5-M-S-PD-0139	V17491-ICND-004	WITH LOCKING DEVICE
HAD50AA702	HAD50BR702	LP DRUM LEVEL TRANSMITTER	LP	25	1	800#	WG	GATE	SA-105	H	MANUAL	SW	TBD	TBD	15	202	220	396	ABPR5-M-S-PD-0139	V17491-ICND-004	WITH LOCKING DEVICE
HAD50AA703	HAD50BR703	LP DRUM LEVEL TRANSMITTER	LP	25	1	800#	WG	GATE	SA-105	H	MANUAL	SW	TBD	TBD	15	202	220	396	ABPR5-M-S-PD-0139	V17491-ICND-004	WITH LOCKING DEVICE
HAD50AA704	HAD50BR704	LP DRUM LEVEL TRANSMITTER	LP	25	1	800#	WG	GATE	SA-105	H	MANUAL	SW	TBD	TBD	15	202	220	396	ABPR5-M-S-PD-0139	V17491-ICND-004	WITH LOCKING DEVICE
HAD50AA705	HAD50BR705	LP DRUM LEVEL GAUGE	LP	40	1.5	800#	WG	GATE	SA-105	H	MANUAL	SW	TBD	TBD	15	202	220	396	ABPR5-M-S-PD-0139	V17491-ICND-004	WITH LOCKING DEVICE
HAD50AA706	HAD50BR706	LP DRUM LEVEL GAUGE	LP	40	1.5	800#	WG	GATE	SA-105	H	MANUAL	SW	TBD	TBD	15	202	220	396	ABPR5-M-S-PD-0139	V17491-ICND-004	WITH LOCKING DEVICE
HAD50AA708	HAD50BR708	LP DRUM PRESSURE TRANSMITTER	LP	20	0.75	800#	GV	GLOBE	SA-105	H	MANUAL	SW	TBD	TBD	12	193	180	380	ABPR5-M-S-PD-0139	V17491-ICND-004	
HAD50AA709	HAD50BR712	LP DRUM LEVEL TRANSMITTER	LP	25	1	800#	WG	GATE	SA-105	H	MANUAL	SW	TBD	TBD	15	202	220	396	ABPR5-M-S-PD-0139	V17491-ICND-004	WITH LOCKING DEVICE
HAD50AA710	HAD50BR709	LP DRUM PRESSURE TRANSMITTER	LP	20	0.75	800#	GV	GLOBE	SA-105	H	MANUAL	SW	TBD	TBD	12	193	180	380	ABPR5-M-S-PD-0139	V17491-ICND-004	
HAD50AA711	HAD50BR713	LP DRUM LEVEL TRANSMITTER	LP	25	1	800#	WG	GATE	SA-105	H	MANUAL	SW	TBD	TBD	15	202	220	396	ABPR5-M-S-PD-0139	V17491-ICND-004	WITH LOCKING DEVICE
HAD50AA712	HAD50BR710	LP DRUM PRESSURE GAUGE	LP	20	0.75	800#	GV	GLOBE	SA-105	H	MANUAL	SW	TBD	TBD	12	193	180	380	ABPR5-M-S-PD-0139	V17491-ICND-004	
HAD50AA714	HAD50BR711	LP DRUM PRESSURE TEST	LP	15	0.5	2500#	GV	GLOBE	SA-105	H	MANUAL	SW	TBD	TBD	12	193	180	380	ABPR5-M-S-PD-0139	V17491-ICND-004	I&C TEST VALVE
HAD50AA801	HAD50BR801	LP DRUM SAMPLE	LP	20	0.75	800#	GV	GLOBE	SA-105	H	MANUAL	SW	TBD	TBD	15	202	220	396	ABPR5-M-S-PD-0139	V17491-ICND-004	
HAD50AA802	HAD50BR801	LP DRUM SAMPLE	LP	20	0.75	800#	GV	GLOBE	SA-105	H	MANUAL	SW	TBD	TBD	15	202	220	396	ABPR5-M-S-PD-0139	V17491-ICND-004	
HAH10AA001	HAH10BR008	HPSH MAIN STEAM NON-RETURN VALVE	HP	200	8	1500#	-	STOPCHECK	A217 WC9	H	MANUAL	BW	TBD	TBD	85	533	1235	992	ABPR5-M-S-PD-0137	V17491-ICND-003	
HAH10AA002	HAH10BR008	HPSH MAIN STEAM STOP VALVE	HP	200	8	1500#	WG	GATE	A217 WC9	H	MANUAL	BW	TBD	TBD	85	533	1235	992	ABPR5-M-S-PD-0137	V17491-ICND-003	
HAH10AA103	HAH10BR603	HPSH START UP VENT ISOLATION	HP	150	6	1500#	WG	GATE	A217 WC9	MO	MOTOR	BW	TBD	TBD	85	533	1235	992	ABPR5-M-S-PD-0137	V17491-ICND-003	
HAH10AA201	HAH10BR603	HPSH START UP VENT CONTROL VALVE	HP	150	6	1500#	DV	CNTRL	A217 WC9	AM	CYLINDER	BW	TBD	TBD	85	533	1235	992	ABPR5-M-S-PD-0137	V17491-ICND-003	
HAH10AA202	HAH10BR501	HPSH 3-2 XOVER DRAIN	HP	25	1	3100#	BA	BALL	SA-182 F22	AO (Pneumatic-On-Off)	CYLINDER	SW	TBD	TBD	105	406	1525	762	ABPR5-M-S-PD-0137	V17491-ICND-003	
HAH10AA203	HAH10BR502	HPSH ATTEMP DRAIN POT DRAIN	HP	25	1	3100#	BA	BALL	SA-182 F22	AO (Pneumatic-On-Off)	CYLINDER	SW	TBD	TBD	105	499	1525	931	ABPR5-M-S-PD-0137	V17491-ICND-003	
HAH10AA204	HAH10BR503	HPSH DRAIN POT DRAIN	HP	25	1	3100#	BA	BALL	SA-182 F22	AO (Pneumatic-On-Off)	CYLINDER	SW	TBD	TBD	101	533	1460	992	ABPR5-M-S-PD-0137	V17491-ICND-003	
HAH10AA401	HAH10BR901	HPSH SAFETY VALVE	HP	50	2	1500#	SV	SAFETY VALVE (ANGLE)	A217 WC9	SR	SELF REG.	BW	TBD	TBD	85	533	1235	992	ABPR5-M-S-PD-0137	V17491-ICND-003	
HAH10AA501	HAH10BR501	HPSH 3-2 XOVER DRAIN	HP	25	1	3100#	BA	BALL	SA-182 F22	H	MANUAL	SW	TBD	TBD	105	406	1525	762	ABPR5-M-S-PD-0137	V17491-ICND-003	
HAH10AA502	HAH10BR502	HPSH ATTEMP DRAIN POT DRAIN	HP	25	1	3100#	BA	BALL	SA-182 F22	H	MANUAL	SW	TBD	TBD	105	499	1525	931	ABPR5-M-S-PD-0137	V17491-ICND-003	
HAH10AA503	HAH10BR503	HPSH DRAIN POT DRAIN	HP	25	1	3100#	BA	BALL	SA-182 F22	H	MANUAL	SW	TBD	TBD	101	533	1460	992	ABPR5-M-S-PD-0137	V17491-ICND-003	
HAH10AA504	HAH10BR504	HPSH OUTLET FREEBLOW DRAIN	HP	25	1	1500#	GV	GLOBE	SA-182 F22	H	MANUAL	SW	TBD	TBD	85	533	1235	992	ABPR5-M-S-PD-0137	V17491-ICND-003	
HAH10AA505	HAH10BR504	HPSH OUTLET FREEBLOW DRAIN	HP	25	1	1500#	GV	GLOBE	SA-182 F22	H	MANUAL	SW	TBD	TBD	85	533	1235	992	ABPR5-M-S-PD-0137	V17491-ICND-003	
HAH10AA506	HAH10BR503	HPSH OUTLET DRAIN	HP	25	1	1690#	-	STOPCHECK	SA-182 F22	H	MANUAL	SW	TBD	TBD	101	533	1460	992	ABPR5-M-S-PD-0137	V17491-ICND-003	
HAH10AA701	HAH10BR701	HP ATTEMP PRESS IND TRANSMITTER	HP	20	0.75	1500#	GV	GLOBE	SA-182 F22	H	MANUAL	SW	TBD	TBD	90	499	1300	931	ABPR5-M-S-PD-0137	V17491-ICND-003	
HAH10AA702	HAH10BR701	HP ATTEMP PRESS IND TRANSMITTER	HP	20	0.75	1500#	GV	GLOBE	SA-182 F22	H	MANUAL	SW	TBD	TBD	90	499	1300	931	ABPR5-M-S-PD-0137	V17491-ICND-003	
HAH10AA703	HAH10BR702	HPSH OUTLET PRESS IND	HP	20	0.75	1500#	GV	GLOBE	SA-182 F22	H	MANUAL	SW	TBD	TBD	85	533	1235	992	ABPR5-M-S-PD-0137	V17491-ICND-003	
HAH10AA704	HAH10BR702	HPSH OUTLET PRESS IND	HP	20	0.75	1500#	GV	GLOBE	SA-182 F22	H	MANUAL	SW	TBD	TBD	85	533	1235	992	ABPR5-M-S-PD-0137	V17491-ICND-003	
HAH10AA705	HAH10BR703	HPSH OUTLET PRESS TRANS	HP	20	0.75	1500#	GV	GLOBE	SA-182 F22	H	MANUAL	SW	TBD	TBD	85	533	1235	992	ABPR5-M-S-PD-0137	V17491-ICND-003	
HAH10AA801	HAH10BR801	HP SAT STEAM SAMPLE	HP	10	0.375	2500#	N	NEEDLE	A-312 TP316H	H	MANUAL	SW	TBD	TBD	90	304	1300	579	ABPR5-M-S-PD-0137	V17491-ICND-003	
HAH10AA802	HAH10BR801	HP SAT STEAM SAMPLE	HP	10	0.375	2500#	N	NEEDLE	A-312 TP316H	H	MANUAL	SW	TBD	TBD	90	304	1300	579	ABPR5-M-S-PD-0137	V17491-ICND-003	
HAH10AA803	HAH10BR803	HPSH TO STEAM TURBINE GLAND SEAL	HP	40	1.5	1500#	-	STOPCHECK	SA-182 F22	H	MANUAL	SW	TBD	TBD	85	533	1235	992	ABPR5-M-S-PD-0137	V17491-ICND-003	
HAH10AA804	HAH10BR803	HPSH TO STEAM TURBINE GLAND SEAL	HP	40	1.5	1500#	GV	GLOBE	SA-182 F22	H	MANUAL	SW	TBD	TBD	85	533	1235	992	ABPR5-M-S-PD-0137	V17491-ICND-003	
HAH10AC001	HAH10BR004	HPSH ATTEMP	HP	250	10	1500#	-	SPRAY	SA-182 F22	-	-	BW	TBD	TBD	90	499	1300	931	ABPR5-M-S-PD-0137	V17491-ICND-003	
HAH50AA001	HAH50BR003	LPSH MAIN STEAM NON-RETURN VALVE	LP	200	8	150#	-	STOPCHECK	A216 WCB	H	MANUAL	BW	TBD	TBD	11	256	160	492	ABPR5-M-S-PD-0139	V17491-ICND-004	
HAH50AA002	HAH50BR003	LPSH MAIN STEAM STOP VALVE	LP	200	8	150#	WG	GATE	A216 WCB	H	MANUAL	BW	TBD	TBD	11	256	160	492	ABPR5-M-S-PD-0139	V17491-ICND-004	
HAH50AA103	HAH50BR602	LPSH START UP VENT ISOLATION	LP	100	4	300#	WG	GATE	A216 WCB	MO	MOTOR	BW	TBD	TBD	11	256	160	492	ABPR5-M-S-PD-0139	V17491-ICND-004	
HAH50AA201	HAH50BR602	LPSH START UP VENT CONTROL VALVE	LP	100	4	150#	DV	CNTRL	A216 WCC	AM	CYLINDER	BW	TBD	TBD	11	256	160	492	ABPR5-M-S-PD-0139	V17491-ICND-004	
HAH50AA202	HAH50BR501	LPSH DRAIN POT DRAIN	LP	25	1	3100#	BA	BALL	SA-105	AO (Pneumatic-On-Off)	CYLINDER	SW	TBD	TBD	14	256	200	492	ABPR5-M-S-PD-0139	V17491-ICND-004	
HAH50AA401	HAH50BR901	LPSH SAFETY VALVE	LP	40	1.5	300#	SV	SAFETY VALVE (ANGLE)	A216 WCC	SR	SELF REG.	FLG	TBD	TBD	11	256	160	492	ABPR5-M-S-PD-0139	V17491-ICND-004	
HAH50AA501	HAH50BR501	LPSH DRAIN POT DRAIN	LP	25	1	3100#	BA	BALL	SA-105	H	MANUAL	SW	TBD	TBD	14	256	200	492	ABPR5-M-S-PD-0139	V17491-ICND-004	
HAH50AA502	HAH50BR502	LPSH OUTLET FREEBLOW DRAIN	LP	25	1	1690#	YG	GLOBE	SA-105	H	MANUAL	SW	TBD	TBD	11	256	160	492	ABPR5-M-S-PD-0139	V17491-ICND-004	
HAH50AA504	HAH50BR503	LPSH OUTLET DRAIN	LP	25	1	800#	-	STOPCHECK	SA-105	H	MANUAL	SW	TBD	TBD	11	256	160	492	ABPR5-M-S-PD-0139	V17491-ICND-004	
HAH50AA701	HAH50BR701	LPSH OUTLET PRESSURE GAUGE	LP	20	0.75	800#	GV	GLOBE	SA-105	H	MANUAL	SW	TBD	TBD	11	256	160	492	ABPR5-M-S-PD-0139	V17491-ICND-004	
HAH50AA703	HAH50BR702	LPSH OUTLET PRESSURE TRANSMITTER	LP	20	0.75	800#	GV	GLOBE	SA-105	H	MANUAL	SW	TBD	TBD	11	256	160	492	ABPR5-M-S-PD-0139	V17491-ICND-004	
HNB10AA701	HNB10BR701	TRANSITION DUCT PRESS TRANSMITTER	XX	25	1	800#	GV	GLOBE	SA-182 F304	H	MANUAL	SW	TBD	TBD	3	621	50	1150	ABPR5-M-S-PD-0136	V17491-ICND-002	
HNB10AA702	HNB10BR702	TRANSITION DUCT PRESS TRANSMITTER	XX	25	1	800#	GV	GLOBE	SA-182 F304	H	MANUAL	SW	TBD	TBD	3	621	50	1150	ABPR5-M-S-PD-0136	V17491-ICND-002	
HNB10AA703	HNB10BR703	TRANSITION DUCT PRESS TRANSMITTER	XX	25	1	800#	GV	GLOBE	SA-182 F304	H	MANUAL	SW	TBD	TBD	3	621	50	1150	ABPR5-M-S-PD-0136	V17491-ICND-002	
HNB10AA704	HNB10BR704	TRANSITION DUCT PRESS TRANSMITTER	XX	25	1	800#	GV	GLOBE	SA-182 F304	H	MANUAL	SW	TBD	TBD	3	621	50	1150	ABPR5-M-S-PD-0136	V17491-ICND-002	
LAA10AA002	LAA10BR002	LPEC TO DA	DA	80	3	300#	SC	SWING CHECK	A216 WCB	-	-	BW	TBD	TBD	29	234	425	454	ABPR5-M-S-PD-0139	V17491-ICND-005	
LAA10AA004	LAA10BR015	LPEC TO DA	DA	200	8	300#	WG	GATE	A216 WCB	H	MANUAL	BW	TBD	TBD	29	234	425	454	ABPR5-M-S-PD-0139	V17491-ICND-005	
LAA10AA102	LAA10BR601	DA VENT	DA	80	3	150#	GV	GLOBE	A216 WCB	MO	MOTOR	BW	TBD	TBD	7	177	100	350	ABPR5-M-S-PD-0139	V17491-ICND-005	
LAA10AA201	LAA10BR002	LPEC TO DA CONTROL VALVE	DA	80	3	300#	DV	CNTRL	A217 WC9	AM	CYLINDER	BW	TBD	TBD	29	234	425	454	ABPR5-M-S-PD-0139	V17491-ICND-005	WITH A-106 B SAFE END
LAA10AA401	LAA10BR901	DA SAFETY VALVE	DA	150	6	600#	SV	SAFETY VALVE (ANGLE)	A217 WC6	SR	SELF REG.	FLG	TBD	TBD	7	177	100	350	ABPR5-M-S-PD-0139	V17491-ICND-005	
LAA10AA501	LAA10BR501	LPEC TO DA DRAIN	DA	25	1	800#	GV	GLOBE	SA-105	H	MANUAL	SW	TBD	TBD	29	234	425	454	ABPR5-M-S-PD-0139	V17491-ICND-005	
LAA10AA505	LAA10BR505	DA LEVEL GAUGE DRAIN	DA	15	0.5	800#	GV	GLOBE	SA-105	H	MANUAL	SW	TBD	TBD	7	177	100	350	ABPR5-M-S-PD-0139	V17491-ICND-005	
LAA10AA602	LAA10BR602	DA N2	DA	25	1	800#	GV	GLOBE	SA-105	H	MANUAL	SW	TBD	TBD	7	177	100	350	ABPR5-M-S-PD-0139	V17491-ICND-005	
LAA10AA603	LAA10BR602	DA N2	DA	25	1	800#	-	STOPCHECK	SA-105	H	MANUAL	SW	TBD	TBD	7	177	100	350	ABPR5-M-S-PD-0139	V17491-ICND-005	
LAA10AA701	LAA10BR701	LPEC TO DA FLOW TRANMITTER	DA	20	0.75	800#	GV	GLOBE	SA-105	H	MANUAL	SW	TBD	TBD	29	234	425	454	ABPR5-M-S-PD-0139	V17491-ICND-005	
LAA10AA702	LAA10BR702	LPEC TO DA FLOW TRANMITTER	DA	20	0.75	800#	GV	GLOBE	SA-105	H	MANUAL	SW	TBD	TBD	29	234	425	454	ABPR5-M-S-PD-0139	V17491-ICND-005	
LAA10AA703	LAA10BR703	DA LEVEL GAUGE	DA	40	1.5	800#	WG	GATE	SA-105	H	MANUAL	SW	TBD	TBD	7	177	100	350	ABPR5-M-S-PD-0139	V17491-ICND-005	WITH LOCKING DEVICE
LAA10AA704	LAA10BR704	DA LEVEL GAUGE	DA	40	1.5	800#	WG	GATE	SA-105	H	MANUAL	SW	TBD	TBD	7	177	100	350	ABPR5-M-S-PD-0139	V17491-ICND-005	WITH LOCKING DEVICE

Valve_Tag	Line_Tag	Service	Sys	Valve_Size (DN)	Valve_Size	Ansi_Class	Customer's Valve Abbr.	Type	Valve_Matl	Customer's Oper. Abbr.	Oper_Type	Connection Type	Manuf	Model_No	D_Press_BARG	D_Temp_C	D_Press_PSI	D_Temp_F	Customer's PID No.	VPI PID's No.	Notes
LAA10AA705	LAA10BR705	DA LEVEL TRANSMITTER	DA	25	1	800#	WG	GATE	SA-105	H	MANUAL	SW	TBD	TBD	7	177	100	350	ABPR5-M-S-PD-0139	V17491-ICND-005	WITH LOCKING DEVICE
LAA10AA706	LAA10BR706	DA LEVEL TRANSMITTER	DA	25	1	800#	WG	GATE	SA-105	H	MANUAL	SW	TBD	TBD	7	177	100	350	ABPR5-M-S-PD-0139	V17491-ICND-005	WITH LOCKING DEVICE
LAA10AA707	LAA10BR707	DA PRESSURE INDICATOR	DA	20	0.75	800#	GV	GLOBE	SA-105	H	MANUAL	SW	TBD	TBD	7	177	100	350	ABPR5-M-S-PD-0139	V17491-ICND-005	
LAA10AA708	LAA10BR708	DA PRESSURE TRANSMITTER	DA	20	0.75	800#	GV	GLOBE	SA-105	H	MANUAL	SW	TBD	TBD	7	177	100	350	ABPR5-M-S-PD-0139	V17491-ICND-005	
LAA10AA709	LAA10BR709	DA LEVEL TRANSMITTER	DA	25	1	800#	WG	GATE	SA-105	H	MANUAL	SW	TBD	TBD	7	177	100	350	ABPR5-M-S-PD-0139	V17491-ICND-005	WITH LOCKING DEVICE
LAA10AA710	LAA10BR710	DA LEVEL TRANSMITTER	DA	25	1	800#	WG	GATE	SA-105	H	MANUAL	SW	TBD	TBD	7	177	100	350	ABPR5-M-S-PD-0139	V17491-ICND-005	WITH LOCKING DEVICE
LAB10AA003	LAB10BR002	HP FW INLET	HP	150	6	1500#	SC	SWING CHECK	A216 WCB	-	-	BW	TBD	TBD	132	333	1910	631	ABPR5-M-S-PD-0137	V17491-ICND-003	
LAB10AA102	LAB10BR002	HPEC INLET	HP	150	6	1500#	WG	GATE	A216 WCB	MO	MOTOR	BW	TBD	TBD	132	333	1910	631	ABPR5-M-S-PD-0137	V17491-ICND-003	
LAB10AA501	LAB10BR501	HPEC INLET DRAIN	HP	25	1	1500#	GV	GLOBE	SA-105	H	MANUAL	SW	TBD	TBD	132	121	1910	250	ABPR5-M-S-PD-0137	V17491-ICND-003	
LAB10AA502	LAB10BR501	HPEC INLET DRAIN	HP	25	1	1500#	GV	GLOBE	SA-105	H	MANUAL	SW	TBD	TBD	132	121	1910	250	ABPR5-M-S-PD-0137	V17491-ICND-003	
LAB10AA503	LAB10BR502	HPEC INLET DRAIN	HP	25	1	1500#	GV	GLOBE	SA-105	H	MANUAL	SW	TBD	TBD	132	333	1910	631	ABPR5-M-S-PD-0137	V17491-ICND-003	
LAB10AA504	LAB10BR502	HPEC INLET DRAIN	HP	25	1	1500#	GV	GLOBE	SA-105	H	MANUAL	SW	TBD	TBD	132	333	1910	631	ABPR5-M-S-PD-0137	V17491-ICND-003	
LAB10AA505	LAB10BR504	HPEC INLET DRAIN	HP	25	1	1500#	GV	GLOBE	SA-105	H	MANUAL	SW	TBD	TBD	132	333	1910	631	ABPR5-M-S-PD-0137	V17491-ICND-003	
LAB10AA506	LAB10BR504	HPEC INLET DRAIN	HP	25	1	1500#	GV	GLOBE	SA-105	H	MANUAL	SW	TBD	TBD	132	333	1910	631	ABPR5-M-S-PD-0137	V17491-ICND-003	
LAB10AA701	LAB10BR701	HP FW FLOW TRANSMITTER	HP	20	0.75	1500#	GV	GLOBE	SA-105	H	MANUAL	SW	TBD	TBD	132	121	1910	250	ABPR5-M-S-PD-0137	V17491-ICND-003	
LAB10AA702	LAB10BR701	HP FW FLOW TRANSMITTER	HP	20	0.75	1500#	GV	GLOBE	SA-105	H	MANUAL	SW	TBD	TBD	132	121	1910	250	ABPR5-M-S-PD-0137	V17491-ICND-003	
LAB10AA703	LAB10BR702	HP FW FLOW TRANSMITTER	HP	20	0.75	1500#	GV	GLOBE	SA-105	H	MANUAL	SW	TBD	TBD	132	121	1910	250	ABPR5-M-S-PD-0137	V17491-ICND-003	
LAB10AA704	LAB10BR702	HP FW FLOW TRANSMITTER	HP	20	0.75	1500#	GV	GLOBE	SA-105	H	MANUAL	SW	TBD	TBD	132	121	1910	250	ABPR5-M-S-PD-0137	V17491-ICND-003	
LAB10AA705	LAB10BR703	HPEC INLET FEED PRESS IND	HP	20	0.75	1500#	GV	GLOBE	SA-105	H	MANUAL	SW	TBD	TBD	132	333	1910	631	ABPR5-M-S-PD-0137	V17491-ICND-003	
LAB10AA706	LAB10BR703	HPEC INLET FEED PRESS IND	HP	20	0.75	1500#	GV	GLOBE	SA-105	H	MANUAL	SW	TBD	TBD	132	333	1910	631	ABPR5-M-S-PD-0137	V17491-ICND-003	
LAB10AA707	LAB10BR704	HPEC INLET FEED PRESS TRANS	HP	20	0.75	1500#	GV	GLOBE	SA-105	H	MANUAL	SW	TBD	TBD	132	333	1910	631	ABPR5-M-S-PD-0137	V17491-ICND-003	
LAB10AA401	LAB10BR901	HP FW INLET SAFETY VALVE	HP	50	2	1500#	SV	SAFETY VALVE (ANGLE)	SA-105	SR	SELF REG.	FLG	TBD	TBD	132	333	1910	631	ABPR5-M-S-PD-0137	V17491-ICND-003	
LAB24AA007	LAB24BR010	HP PUMP MINIMUM FLOW TO DA	DA	65	2.5	900#	GV	GLOBE	A216 WCB	H	MANUAL	BW	TBD	TBD	132	121	1910	250	ABPR5-M-S-PD-0139	V17491-ICND-005	
LAB25AA007	LAB25BR010	HP PUMP MINIMUM FLOW TO DA	DA	65	2.5	900#	GV	GLOBE	A216 WCB	H	MANUAL	BW	TBD	TBD	132	121	1910	250	ABPR5-M-S-PD-0139	V17491-ICND-005	
LAB26AA007	LAB26BR010	HP PUMP MINIMUM FLOW TO DA	DA	65	2.5	900#	GV	GLOBE	A216 WCB	H	MANUAL	BW	TBD	TBD	132	121	1910	250	ABPR5-M-S-PD-0139	V17491-ICND-005	
LAB50AA001	LAB50BR002	LP FW INLET	LPEC	80	3	300#	SC	SWING CHECK	A216 WCB	-	-	BW	TBD	TBD	29	234	425	454	ABPR5-M-S-PD-0139	V17491-ICND-004	
LAB50AA101	LAB50BR002	LP FW INLET	LPEC	80	3	300#	WG	GATE	A216 WCB	MO	MOTOR	BW	TBD	TBD	29	234	425	454	ABPR5-M-S-PD-0139	V17491-ICND-004	
LAB50AA401	LAB50BR401	LP FW INLET SAFETY VALVE	LPEC	50	2	300#	SV	SAFETY VALVE (ANGLE)	A216 WCC	SR	SELF REG.	FLG	TBD	TBD	29	234	425	454	ABPR5-M-S-PD-0139	V17491-ICND-004	
LAB50AA501	LAB50BR501	LP FW INLET DRAIN	LPEC	25	1	800#	GV	GLOBE	SA-105	H	MANUAL	SW	TBD	TBD	29	121	425	250	ABPR5-M-S-PD-0139	V17491-ICND-004	
LAB50AA503	LAB50BR502	LP FW INLET DRAIN	LPEC	25	1	800#	GV	GLOBE	SA-105	H	MANUAL	SW	TBD	TBD	29	234	425	454	ABPR5-M-S-PD-0139	V17491-ICND-004	
LAB50AA505	LAB50BR503	LP FW INLET DRAIN	LPEC	25	1	800#	GV	GLOBE	SA-105	H	MANUAL	SW	TBD	TBD	29	234	425	454	ABPR5-M-S-PD-0139	V17491-ICND-004	
LAB50AA506	LAB50BR503	LP FW INLET DRAIN	LPEC	25	1	800#	GV	GLOBE	SA-105	H	MANUAL	SW	TBD	TBD	29	234	425	454	ABPR5-M-S-PD-0139	V17491-ICND-004	
LAB50AA701	LAB50BR701	LP FW FLOW TRANSMITTER	LPEC	20	0.75	800#	GV	GLOBE	SA-105	H	MANUAL	SW	TBD	TBD	29	121	425	250	ABPR5-M-S-PD-0139	V17491-ICND-004	
LAB50AA702	LAB50BR702	LP FW FLOW TRANSMITTER	LPEC	20	0.75	800#	GV	GLOBE	SA-105	H	MANUAL	SW	TBD	TBD	29	121	425	250	ABPR5-M-S-PD-0139	V17491-ICND-004	
LAB50AA703	LAB50BR703	LP FW INLET PRESSURE GAUGE	LPEC	20	0.75	800#	GV	GLOBE	SA-105	H	MANUAL	SW	TBD	TBD	29	234	425	454	ABPR5-M-S-PD-0139	V17491-ICND-004	
LAB50AA704	LAB50BR703	LP FW INLET PRESSURE GAUGE	LPEC	20	0.75	800#	GV	GLOBE	SA-105	H	MANUAL	SW	TBD	TBD	29	234	425	454	ABPR5-M-S-PD-0139	V17491-ICND-004	
LAB50AA705	LAB50BR704	LP FW INLET PRESSURE TRANSMITTER	LPEC	20	0.75	800#	GV	GLOBE	SA-105	H	MANUAL	SW	TBD	TBD	29	234	425	454	ABPR5-M-S-PD-0139	V17491-ICND-004	
LAB54AA010	LAB54BR010	LP PUMP MINIMUM FLOW TO DA	DA	40	1.5	800#	GV	GLOBE	SA-105	H	MANUAL	SW	TBD	TBD	29	121	425	250	ABPR5-M-S-PD-0139	V17491-ICND-005	WITH LOCKING DEVICE
LAB55AA010	LAB55BR010	LP PUMP MINIMUM FLOW TO DA	DA	40	1.5	800#	GV	GLOBE	SA-105	H	MANUAL	SW	TBD	TBD	29	121	425	250	ABPR5-M-S-PD-0139	V17491-ICND-005	WITH LOCKING DEVICE
LAB56AA010	LAB56BR010	LP PUMP MINIMUM FLOW TO DA	DA	40	1.5	800#	GV	GLOBE	SA-105	H	MANUAL	SW	TBD	TBD	29	121	425	250	ABPR5-M-S-PD-0139	V17491-ICND-005	WITH LOCKING DEVICE
LAE10AA003	LAE10BR001	HP ATTEMP SPRAYWATER	HP	50	2	1500#	WG	GATE	SA-105	H	MANUAL	SW	TBD	TBD	132	121	1910	250	ABPR5-M-S-PD-0137	V17491-ICND-003	
LAE10AA004	LAE10BR002	HP ATTEMP SPRAYWATER CHECK	HP	50	2	1690#	LC	CHECK	SA-182 F22	-	-	SW	TBD	TBD	132	499	1910	931	ABPR5-M-S-PD-0137	V17491-ICND-003	
LAE10AA101	LAE10BR001	HP ATTEMP SPRAYWATER	HP	50	2	1690#	YG	GLOBE	SA-105	MO	MOTOR	SW	TBD	TBD	132	121	1910	250	ABPR5-M-S-PD-0137	V17491-ICND-003	
LAE10AA010	LAE10BR010	HPEC TO ATTEMP (ISOLATION), (BY OTHERS)	HP	40	1.5	900#	SW	GLOBE	SA-105	H	MANUAL	SW	-	-	132	121	1910	250	ABPR5-M-S-PD-0137	V17491-ICND-003	
LAE10AA502	LAE10BR501	HP ATTEMP SPRAYWATER DRAIN	HP	25	1	1500#	GV	GLOBE	SA-105	H	MANUAL	SW	TBD	TBD	132	121	1910	250	ABPR5-M-S-PD-0137	V17491-ICND-003	
LAE10AA503	LAE10BR501	HP ATTEMP SPRAYWATER DRAIN	HP	25	1	1500#	GV	GLOBE	SA-105	H	MANUAL	SW	TBD	TBD	132	121	1910	250	ABPR5-M-S-PD-0137	V17491-ICND-003	
LAE10AA504	LAE10BR502	HP ATTEMP SPRAYWATER STRAINER DRAIN	HP	25	1	1500#	GV	GLOBE	SA-105	H	MANUAL	SW	TBD	TBD	132	121	1910	250	ABPR5-M-S-PD-0137	V17491-ICND-003	
LAE10AA505	LAE10BR502	HP ATTEMP SPRAYWATER STRAINER DRAIN	HP	25	1	1500#	GV	GLOBE	SA-105	H	MANUAL	SW	TBD	TBD	132	121	1910	250	ABPR5-M-S-PD-0137	V17491-ICND-003	
LAE10AA701	LAE10BR701	HP ATTEMP SPRAYWATER FLOW TRANSMITTER	HP	20	0.75	1500#	GV	GLOBE	SA-105	H	MANUAL	SW	TBD	TBD	132	121	1910	250	ABPR5-M-S-PD-0137	V17491-ICND-003	
LAE10AA702	LAE10BR701	HP ATTEMP SPRAYWATER FLOW TRANSMITTER	HP	20	0.75	1500#	GV	GLOBE	SA-105	H	MANUAL	SW	TBD	TBD	132	121	1910	250	ABPR5-M-S-PD-0137	V17491-ICND-003	
LAE10AA703	LAE10BR702	HP ATTEMP SPRAYWATER FLOW TRANSMITTER	HP	20	0.75	1500#	GV	GLOBE	SA-105	H	MANUAL	SW	TBD	TBD	132	121	1910	250	ABPR5-M-S-PD-0137	V17491-ICND-003	
LAE10AA704	LAE10BR702	HP ATTEMP SPRAYWATER FLOW TRANSMITTER	HP	20	0.75	1500#	GV	GLOBE	SA-105	H	MANUAL	SW	TBD	TBD	132	121	1910	250	ABPR5-M-S-PD-0137	V17491-ICND-003	
LAE10AA705	LAE10BR703	HP ATTEMP SPRAYWATER PRESS IND TRANSMITTER	HP	20	0.75	1500#	GV	GLOBE	SA-105	H	MANUAL	SW	TBD	TBD	132	121	1910	250	ABPR5-M-S-PD-0137	V17491-ICND-003	
LAE10AA706	LAE10BR703	HP ATTEMP SPRAYWATER PRESS IND TRANSMITTER	HP	20	0.75	1500#	GV	GLOBE	SA-105	H	MANUAL	SW	TBD	TBD	132	121	1910	250	ABPR5-M-S-PD-0137	V17491-ICND-003	
LAE10AA707	LAE10BR704	HP ATTEMP SPRAYWATER STRAINER PRESS DIFF	HP	20	0.75	1500#	GV	GLOBE	SA-105	H	MANUAL	SW	TBD	TBD	132	121	1910	250	ABPR5-M-S-PD-0137	V17491-ICND-003	
LAE10AA708	LAE10BR704	HP ATTEMP SPRAYWATER STRAINER PRESS DIFF	HP	20	0.75	1500#	GV	GLOBE	SA-105	H	MANUAL	SW	TBD	TBD	132	121	1910	250	ABPR5-M-S-PD-0137	V17491-ICND-003	
LAE10AA709	LAE10BR705	HP ATTEMP SPRAYWATER STRAINER PRESS DIFF	HP	20	0.75	1500#	GV	GLOBE	SA-105	H	MANUAL	SW	TBD	TBD	132	121	1910	250	ABPR5-M-S-PD-0137	V17491-ICND-003	
LAE10AA710	LAE10BR705	HP ATTEMP SPRAYWATER STRAINER PRESS DIFF	HP	20	0.75	1500#	GV	GLOBE	SA-105	H	MANUAL	SW	TBD	TBD	132	121	1910	250	ABPR5-M-S-PD-0137	V17491-ICND-003	
LBG20AA006	LBG20BR010	CUSTOMER LP STEAM TO DA	DA	150	6	150#	-	GATE	A216 WCB	H	MANUAL	BW	TBD	TBD	11	256	160	492	ABPR5-M-S-PD-0139	V17491-ICND-005	
LBG20AA202	LBG20BR020	DA PEGGING STEAM CONTROL VALVE	DA	150	6	150#	DV	CNTRL	A216 WCC	AM	CYLINDER	BW	TBD	TBD	11	256	160	492	ABPR5-M-S-PD-0139	V17491-ICND-005	
LCA50AA201	LCA50BR020	CONDENSATE TO DA CONTROL VALVE	DA	150	6	300#	DV	CNTRL	A216 WCC	AM	CYLINDER	BW	TBD	TBD	28	107	400	225	ABPR5-M-S-PD-0139	V17491-ICND-005	
LCA50AA502	LCA50BR510	CONDENSATE TO DA DRAIN	DA	25	1	800#	GV	GLOBE	SA-105	H	MANUAL	SW	TBD	TBD	28	107	400	225	ABPR5-M-S-PD-0139	V17491-ICND-005	
LCA50AA503	LCA50BR510	CONDENSATE TO DA DRAIN	DA	25	1	800#	GV	GLOBE	SA-105	H	MANUAL	SW	TBD	TBD	28	107	400	225	ABPR5-M-S-PD-0139	V17491-ICND-005	
LCQ10AA004	LCQ10BR506	BD TANK COOLING WATER CHECK	BD	50	2	800#	LC	CHECK	SA-105	-	-	SW	TBD	TBD	3	149	50	300	ABPR5-M-S-PD-0140	V17491-ICND-006	
LCQ10AA201	LCQ10BR506	BD TANK COOLING WATER CONTROL VALVE	BD	40	1.5	150#	DV	CNTRL	A216 WCC	AM	CYLINDER	SW	TBD	TBD	3	149	50	300	ABPR5-M-S-PD-0140	V17491-ICND-006	
LCQ10AA501	LCQ10BR501	BD TANK DRAIN	BD	50	2	800#	GV	GLOBE	SA-105	H	MANUAL	SW	TBD	TBD	3	149	50	300	ABPR5-M-S-PD-0140	V17491-ICND-006	
LCQ10AA502	LCQ10BR501	BD TANK DRAIN	BD	50	2	800#	GV	GLOBE	SA-105	H	MANUAL	SW	TBD	TBD	3	149	50	300	ABPR5-M-S-PD-0140	V17491-ICND-006	
LCQ10AA701	LCQ10BR701	BD TANK LEVEL GAUGE	BD	40	1.5	800#	WG	GATE	SA-105	H	MANUAL	SW	TBD	TBD	3	149	50	300	ABPR5-M-S-PD-0140	V17491-ICND-006	WITH LOCKING DEVICE
LCQ10AA702	LCQ10BR702	BD TANK LEVEL GAUGE	BD	40	1.5	800#	WG	GATE	SA-105	H	MANUAL	SW	TBD	TBD	3	149	50	300	ABPR5-M-S-PD-0140	V17491-ICND-006	WITH LOCKING DEVICE
LCQ10AA703	LCQ10BR703	BD TANK PRESSURE INDICATOR	BD	20	0.75	800#	GV	GLOBE	SA-105	H	MANUAL	SW	TBD	TBD	3	149	50	300	ABPR5-M-S-PD-0140	V17491-ICND-006	
LCQ10AA704	LCQ10BR704	BD TANK LEVEL GAUGE	BD	40	1.5	800#	WG	GATE	SA-105	H	MANUAL	SW	TBD	TBD	3	149	50	300	ABPR5-M-S-PD-0140	V17491-ICND-006	WITH LOCKING DEVICE
LCQ10AA705	LCQ10BR705	BD TANK LEVEL GAUGE	BD	40	1.5	800#	WG	GATE	SA-105	H	MANUAL	SW	TBD	TBD	3	149	50	300	ABPR5-M-S-PD-0140	V17491-ICND-006	WITH LOCKING DEVICE
LCQ11AA501	LCQ11BR511	BD TANK LEVEL GAUGE DRAIN	BD	15	0.5	800#	GV	GLOBE	SA-105	H	MANUAL	SW	TBD	TBD	3	149	50	300	ABPR5-M-S-PD-0140	V17491-ICND-006	
LCQ11AA512	LCQ11BR512	BD TANK LEVEL GAUGE DRAIN	BD	15	0.5	800#	GV	GLOBE	SA-105	H	MANUAL	SW	TBD	TBD	3	149	50	300	ABPR5-M-S-PD-0140	V17491-ICND-006	

Vogt Power International

LISTS

13551 Triton Park Boulevard, Suite 2000 ● Louisville, Kentucky 40223 U.S.A.

INSTRUMENT LIST
For
Amata B. Grimm Power (Rayong) 5 Limited
For
Vogt Power International Project No. V17491 (ABPR5)

DOCUMENT NO. V17491-ICNA-004

Prepared by: George Zhan, I & C Engineer

Peer Reviewed by: Seth Hall, I & C Engineer

Reviewed by: Poonsap Homniyom, Project Engineer

Approved by: Kristie Beaven, Director of Engineering

OWNER	Amata B.Grimm Power (Rayong) 5 Limited
PROJECT	ABPR5 Combined Cycle Cogeneration Plant Project
CONTRACTOR	Sumitomo Corporation
TITLE	HRSG INSTRUMENT LIST
PROJECT CONTROL NO.	ABPR5-K-S-HA-1004 — REV. 03

Number	Date	REVISION RECORD	Originator
0	5-Sep-2016	Initial Issue	George zhan
1	21-Dec-2016	Update Fuel Gas Operating Temperature	George zhan
2	30-Jan-2017	Update Vendor information	George zhan
3	17-Feb-17	Customer Comments	George zhan
4			
5			

Current Revision: 17-Feb-2016	INSTRUMENT LIST	Document Number: V17491-ICNA-004
Original Issue Date: 5-Sep-2016		Page 1

13551 Triton Park Blvd Ste 2000
Louisville, Kentucky 40223

1.0 DESCRIPTION OF INPUT/OUTPUT LIST

1.1 All Instruments shown on P&ID have been assigned tag numbers in accordance with the Instrument List.

1.2 Both unit tag numbers can be identified by the following system. The letter "X" given in each prefix of the instrument tag equals "51" for Unit 51 and "52" for Unit 52. For instruments in the condensate system, the letter "X" given in each prefix of the instrument tag equals "50". For instruments in the deaerator, the letter "X" given in each prefix of the instrument tag equals "05".

Current Revision: 17-Feb-2016	INSTRUMENT LIST	Document Number: V17491-ICNA-004
Original Issue Date: 5-Sep-2016		Page 2

CUSTOMER TAG NUMBER	SYSTEM	SERVICE DESCRIPTION	CALIBRATION / MEASUREMENT RANGE	DESIGN PRESS. (BARG)	DESIGN PRESS. (PSIG)	DESIGN TEMP. (°C)	DESIGN TEMP. (°F)	MAXIMUM OPERATING PRESS. (BARG)	MAXIMUM OPERATING PRESS. (PSIG)	MAXIMUM OPERATING TEMP. (°C)	MAXIMUM OPERATING TEMP. (°F)	POWER REQUIREMENT	SIGNAL TYPE	NOMINAL SIZE	MATERIAL OF CONSTRUCTION	PROCESS CONNECTION SIZE	TYPE	MANUFACTURER	MODEL NUMBER	PROJECT CONTROL NUMBER	P&ID
XHAH10CT401	HP	Steam Outlet Test Thermowell	N/A	85.1	1235	533.3	992	81.2	1177.2	528.0	982.4	N/A	N/A	1.5" (38.1mm) Actual OD	SA-182 F22	1/2" FNPT	Tapered, Stepless, Weld-In	JMS Southeast	DWGV1169N6	ABPR5-M-S-PD-0137	V17491-ICND-003
XHAH10CT501	HP	Steam Outlet Temperature Indicator	200 to 650 °C	85.1	1235	533.3	992	81.2	1177.2	528.0	982.4	N/A	Visual	4 1/2" (114mm) Dial Face	316SS	1/2" MNPT	Gas-Actuated	Ashcroft	DWGV1168L12N6.5.200-600C	ABPR5-M-S-PD-0137	V17491-ICND-003
XHAH10CT501	HP	Steam Outlet Temperature Indicator Thermowell	N/A	85.1	1235	533.3	992	81.2	1177.2	528.0	982.4	N/A	N/A	1.5" (38.1mm) Actual OD	SA-182 F22	1/2" FNPT	Tapered, Stepless, Weld-In	JMS Southeast	DWGV1160U3T1E3	ABPR5-M-S-PD-0137	V17491-ICND-003
XHAH10CT004	HP	Steam Outlet Temperature Element	-200 to 900 °C	85.1	1235	533.3	992	81.2	1177.2	528.0	982.4	N/A	Type E, mV	1/4" (6.35mm) Dia.	316SS Sheath / MgO Insulation	3/4" FNPT / 1/2" FNPT	Elec. Conn. / Inst. Conn.	JMS Southeast	DWGV1162EL5.5N6M	ABPR5-M-S-PD-0137	V17491-ICND-003
XHAH10CT004	HP	Steam Outlet Temperature Element Thermowell	N/A	85.1	1235	533.3	992	81.2	1177.2	528.0	982.4	N/A	N/A	1.5" (38.1mm) Actual OD	SA-182 F22	1/2" FNPT	Tapered, Stepless, Weld-In	JMS Southeast	DWGV1160U3T1E2	ABPR5-M-S-PD-0137	V17491-ICND-003
XHAH10CT003	HP	Steam Outlet Temperature Element	-200 to 900 °C	85.1	1235	533.3	992	81.2	1177.2	528.0	982.4	N/A	Type E, mV	1/4" (6.35mm) Dia.	316SS Sheath / MgO Insulation	3/4" FNPT / 1/2" FNPT	Elec. Conn. / Inst. Conn.	JMS Southeast	DWGV1162EL5.5N6M	ABPR5-M-S-PD-0137	V17491-ICND-003
XHAH10CT003	HP	Steam Outlet Temperature Element Thermowell	N/A	85.1	1235	533.3	992	81.2	1177.2	528.0	982.4	N/A	N/A	1.5" (38.1mm) Actual OD	SA-182 F22	1/2" FNPT	Tapered, Stepless, Weld-In	JMS Southeast	DWGV1160U3T1E2	ABPR5-M-S-PD-0137	V17491-ICND-003
XHAH10CP002	HP	Steam Outlet Pressure Transmitter	0 (4 mA) to 90 (20 mA) barg	85.1	1235	533.3	992	81.2	1177.2	528.0	982.4	Loop Powered	4-20mA	N/A	316L SS	1/2" MNPT	Pressure	Foxboro	IGP10-T22E1F-H1T	ABPR5-M-S-PD-0137	V17491-ICND-003
XHAH10CP501	HP	Steam Outlet Pressure Gauge	0 to 100 barg	85.1	1235	533.3	992	81.2	1177.2	528.0	982.4	N/A	Visual	4 1/2" Dial Face	316SS	1/2" MNPT	Lower Stem Connection	Ashcroft	45-1259SD-04L-XOSSG	ABPR5-M-S-PD-0137	V17491-ICND-003
XHAH10CT006	HP	Steam Outlet Temperature Element (Drain Line)	-200 to 900 °C	85.1	1235	533.3	992	81.2	1177.2	528.0	982.4	N/A	Type E, mV	1/4" (6.35mm) Dia.	316SS Sheath / MgO Insulation	3/4" FNPT / 1/2" FNPT	Elec. Conn. / Inst. Conn.	JMS Southeast	DWGV1162EL5.5N6M	ABPR5-M-S-PD-0137	V17491-ICND-003
XHAH10CT006	HP	Steam Outlet Temperature Element Thermowell (Drain Line)	N/A	85.1	1235	533.3	992	81.2	1177.2	528.0	982.4	N/A	N/A	1.5" (38.1mm) Actual OD	SA-182 F22	1/2" FNPT	Tapered, Stepless, Weld-In	JMS Southeast	DWGV1160U3T1E2	ABPR5-M-S-PD-0137	V17491-ICND-003
XHAH10CT002	HP	Attemperator Outlet Temperature Element	-200 to 900 °C	89.6	1300	499.4	931	82.1	1190.7	476.9	890.4	N/A	Type E, mV	1/4" (6.35mm) Dia.	316SS Sheath / MgO Insulation	3/4" FNPT / 1/2" FNPT	Elec. Conn. / Inst. Conn.	JMS Southeast	DWGV1162EL6.5N5M	ABPR5-M-S-PD-0137	V17491-ICND-003
XHAH10CT002	HP	Attemperator Outlet Temperature Element Thermowell	N/A	89.6	1300	499.4	931	82.1	1190.7	476.9	890.4	N/A	N/A	1.5" (38.1mm) Actual OD	SA-182 F22	1/2" FNPT	Tapered, Stepless, Weld-In	JMS Southeast	DWGV1160U4T1E2	ABPR5-M-S-PD-0137	V17491-ICND-003
XHAH10CT005	HP	Attemperator Outlet Temperature Element (Drain Line)	-200 to 900 °C	89.6	1300	499.4	931	82.1	1190.7	476.9	890.4	N/A	Type E, mV	1/4" (6.35mm) Dia.	316SS Sheath / MgO Insulation	3/4" FNPT / 1/2" FNPT	Elec. Conn. / Inst. Conn.	JMS Southeast	DWGV1162EL6.5N5M	ABPR5-M-S-PD-0137	V17491-ICND-003
XHAH10CT005	HP	Attemperator Outlet Temperature Element Thermowell (Drain Line)	N/A	89.6	1300	499.4	931	82.1	1190.7	476.9	890.4	N/A	N/A	1.5" (38.1mm) Actual OD	SA-182 F22	1/2" FNPT	Tapered, Stepless, Weld-In	JMS Southeast	DWGV1160U4T1E2	ABPR5-M-S-PD-0137	V17491-ICND-003
XLAE10CP002	HP	Attemperator Spraywater Differential Pressure Transmitter	0 (4 mA) to 1.4 (20 mA) barg	131.7	1910	121.1	250	N/A	N/A	105.4	221.7	Loop Powered	4-20mA	N/A	316L SS	1/2" MNPT	Pressure	Foxboro	IDP10-T22C01F-M3H1T	ABPR5-M-S-PD-0137	V17491-ICND-003
XLAE10CF501	HP	Attemperator Spraywater Flow Element	0 to 3000 kg/hr	131.7	1910	121.1	250	N/A	N/A	105.4	221.7	N/A	N/A	2"	SA-106 Gr. B	Butt Weld	Flow Nozzle	Vickery-Simms	VFN-1290-1A/B	ABPR5-M-S-PD-0137	V17491-ICND-003
XLAE10CF001	HP	Attemperator Spraywater Flow Transmitter	0 (4 mA) to 145.6 (20 mA) mmwc	131.7	1910	121.1	250	N/A	N/A	105.4	221.7	Loop Powered	4-20mA	N/A	316L SS	1/2" FNPT	Differential Pressure	Foxboro	IDP10-T22A01F-M3H1T	ABPR5-M-S-PD-0137	V17491-ICND-003
XLAE10CP001	HP	Attemperator Spraywater Pressure Transmitter	0 (4 mA) to 140 (20 mA) barg	131.7	1910	121.1	250	N/A	N/A	105.4	221.7	Loop Powered	4-20mA	N/A	316L SS	1/2" MNPT	Pressure	Foxboro	IGP10-T22E1F-H1T	ABPR5-M-S-PD-0137	V17491-ICND-003
XLAE10CT001	HP	Attemperator Spraywater Temperature Element	-200 to 900 °C	131.7	1910	121.1	250	N/A	N/A	105.4	221.7	N/A	Type E, mV	1/4" (6.35mm) Dia.	316SS Sheath / MgO Insulation	3/4" FNPT / 1/2" FNPT	Elec. Conn. / Inst. Conn.	JMS Southeast	DWGV1162EL4N3M	ABPR5-M-S-PD-0137	V17491-ICND-003
XLAE10CT001	HP	Attemperator Spraywater Temperature Element Thermowell	N/A	131.7	1910	121.1	250	N/A	N/A	105.4	221.7	N/A	N/A	1" (25.4mm) SW	SA-105	1/2" FNPT	Tapered, Stepless, Socket Weld	JMS Southeast	DWG1161AQ1B.875U2.5ZG2	ABPR5-M-S-PD-0137	V17491-ICND-003
XLAE10CT401	HP	Attemperator Spraywater Test Thermowell	N/A	131.7	1910	121.1	250	N/A	N/A	105.4	221.7	N/A	N/A	1" (25.4mm) SW	SA-105	1/2" FNPT	Tapered, Stepless, Socket Weld	JMS Southeast	DWG1161AQ1B.875U2.5ZG2	ABPR5-M-S-PD-0137	V17491-ICND-003
XHAH10CP001	HP	Attemperator Inlet Pressure Transmitter	0 (4 mA) to 100 (20 mA) barg	89.6	1300	499.4	931	82.1	1191.1	499.5	931.2	Loop Powered	4-20mA	N/A	316L SS	1/2" MNPT	Pressure	Foxboro	IGP10-T22E1F-H1T	ABPR5-M-S-PD-0137	V17491-ICND-003
XHAH10CT001	HP	Attemperator Inlet Temperature Element	-200 to 900 °C	89.6	1300	499.4	931	82.1	1191.1	499.5	931.2	N/A	Type E, mV	1/4" (6.35mm) Dia.	316SS Sheath / MgO Insulation	3/4" FNPT / 1/2" FNPT	Elec. Conn. / Inst. Conn.	JMS Southeast	DWGV1162EL6.5N5M	ABPR5-M-S-PD-0137	V17491-ICND-003
XHAH10CT001	HP	Attemperator Inlet Temperature Element Thermowell	N/A	89.6	1300	499.4	931	82.1	1191.1	499.5	931.2	N/A	N/A	1.5" (38.1mm) Actual OD	SA-182 F22	1/2" FNPT	Tapered, Stepless, Weld-In	JMS Southeast	DWGV1160U4T1E2	ABPR5-M-S-PD-0137	V17491-ICND-003
XHAD10CL501	HP	Drum Level Gauge / Water Column Assembly	N/A	89.6	1300	303.9	579	82.2	1192.8	297.8	568.0	230Vac	Visual	Min. 2.5"	Steel / Water Column	1 1/2" SW	Bi-Color	Quest-Tec Solutions, Inc	STB-3000-08	ABPR5-M-S-PD-0137	V17491-ICND-003
XHAD10CL004	HP	Drum Remote Level Indicator Assembly	N/A	89.6	1300	303.9	579	82.2	1192.8	297.8	568.0	230Vac	Dry Contact	Min. 2.5"	Steel / Water Column	1 1/2" SW	Conductivity Probe	Quest-Tec Solutions, Inc	LT-210-10	ABPR5-M-S-PD-0137	V17491-ICND-003
XHAD10CL502	HP	**Drum Remote Level Indicator (located in control room)**	N/A	89.6	1300	303.9	579	82.2	1192.8	297.8	568.0	230Vac	24Vdc	N/A	N/A	N/A	N/A	Quest-Tec Solutions, Inc	LTI-210-10	ABPR5-M-S-PD-0137	V17491-ICND-003
XHAD10CL001	HP	Drum Level Transmitter	-1283 (4 mA) to 0 (20 mA) mmwc	89.6	1300	303.9	579	82.2	1192.8	297.8	568.0	Loop Powered	4-20mA	N/A	316L SS	1/2" FNPT	Differential Pressure	Foxboro	IDP10-T22B01F-M3H1T	ABPR5-M-S-PD-0137	V17491-ICND-003
XHAD10BB501	HP	Drum Level Transmitter Condensate Pot	N/A	89.6	1300	303.9	579	82.2	1192.8	297.8	568.0	N/A	N/A	3" x 11" (76.2 x 279.4mm)	SA-106 Gr. B	1/2" SW / 1/2" FNPT / 1/2" FNPT	Side / Top / Bottom	Quality Products & Sales	3" x 11" A105 S/80	ABPR5-M-S-PD-0137	V17491-ICND-003
XHAD10CL002	HP	Drum Level Transmitter	-1283 (4 mA) to 0 (20 mA) mmwc	89.6	1300	303.9	579	82.2	1192.8	297.8	568.0	Loop Powered	4-20mA	N/A	316L SS	1/2" FNPT	Differential Pressure	Foxboro	IDP10-T22B01F-M3H1T	ABPR5-M-S-PD-0137	V17491-ICND-003
XHAD10BB502	HP	Drum Level Transmitter Condensate Pot	N/A	89.6	1300	303.9	579	82.2	1192.8	297.8	568.0	N/A	N/A	3" x 11" (76.2 x 279.4mm)	SA-106 Gr. B	1/2" SW / 1/2" FNPT / 1/2" FNPT	Side / Top / Bottom	Quality Products & Sales	3" x 11" A105 S/80	ABPR5-M-S-PD-0137	V17491-ICND-003
XHAD10CL003	HP	Drum Level Transmitter	-1283 (4 mA) to 0 (20 mA) mmwc	89.6	1300	303.9	579	82.2	1192.8	297.8	568.0	Loop Powered	4-20mA	N/A	316L SS	1/2" FNPT	Differential Pressure	Foxboro	IDP10-T22B01F-M3H1T	ABPR5-M-S-PD-0137	V17491-ICND-003
XHAD10BB503	HP	Drum Level Transmitter Condensate Pot	N/A	89.6	1300	303.9	579	82.2	1192.8	297.8	568.0	N/A	N/A	3" x 11" (76.2 x 279.4mm)	SA-106 Gr. B	1/2" SW / 1/2" FNPT / 1/2" FNPT	Side / Top / Bottom	Quality Products & Sales	3" x 11" A105 S/80	ABPR5-M-S-PD-0137	V17491-ICND-003
XHAD10CP501	HP	Drum Pressure Gauge	0 to 160 barg	89.6	1300	303.9	579	82.2	1192.8	297.8	568.0	N/A	Visual	4 1/2" (114mm) Dial Face	316SS	1/2" MNPT	Lower Stem Connection	Ashcroft	45-1259SD-04L-XOSSG	ABPR5-M-S-PD-0137	V17491-ICND-003
XHAD10CP001	HP	Drum Pressure Transmitter	0 (4 mA) to 100 (20 mA) barg	89.6	1300	303.9	579	82.2	1192.8	297.8	568.0	Loop Powered	4-20mA	N/A	316L SS	1/2" MNPT	Pressure	Foxboro	IGP10-T22E1F-H1T	ABPR5-M-S-PD-0137	V17491-ICND-003
XHAD10CP002	HP	Drum Pressure Transmitter	0 (4 mA) to 100 (20 mA) barg	89.6	1300	303.9	579	82.2	1192.8	297.8	568.0	Loop Powered	4-20mA	N/A	316L SS	1/2" MNPT	Pressure	Foxboro	IGP10-T22E1F-H1T	ABPR5-M-S-PD-0137	V17491-ICND-003
XHAC20CT501	HP	Feedwater Outlet Temperature Indicator	50 to 450 °C	107.9	1565	303.9	579	83.3	1207.7	293.4	560.1	N/A	Visual	5" (127mm) Dial Face	316SS	1/2" MNPT	Bi-Metal	Ashcroft	DWGV1167L9N450-450C	ABPR5-M-S-PD-0137	V17491-ICND-003
XHAC20CT501	HP	Feedwater Outlet Temperature Indicator Thermowell	N/A	107.9	1565	303.9	579	83.3	1207.7	293.4	560.1	N/A	N/A	1" (25.4mm) SW	SA-105	1/2" FNPT	Tapered, Stepless, Socket Weld	JMS Southeast	DWGV1161AQ1B.875U3.5ZG2	ABPR5-M-S-PD-0137	V17491-ICND-003
XHAC20CT001	HP	Feedwater Outlet Temperature Element	-200 to 900 °C	107.9	1565	303.9	579	83.3	1207.7	293.4	560.1	N/A	Type E, mV	1/4" (6.35mm) Dia.	316SS Sheath / MgO Insulation	3/4" FNPT / 1/2" FNPT	Elec. Conn. / Inst. Conn.	JMS Southeast	DWGV1162EL5N3M	ABPR5-M-S-PD-0137	V17491-ICND-003
XHAC20CT001	HP	Feedwater Outlet Temperature Element Thermowell	N/A	107.9	1565	303.9	579	83.3	1207.7	293.4	560.1	N/A	N/A	1" (25.4mm) SW	SA-105	1/2" FNPT	Tapered, Stepless, Socket Weld	JMS Southeast	DWGV1161AQ1B.875U3.5ZG2	ABPR5-M-S-PD-0137	V17491-ICND-003
XHAC20CT401	HP	Fuel Gas Preheater Water Outlet Test Thermowell	N/A	131.7	1910	332.8	631	85.2	1235.9	241.3	466.3	N/A	N/A	1" (25.4mm) SW	SA-105	1/2" FNPT	Tapered, Stepless, Socket Weld	JMS Southeast	DWGV1161AQ1B.875U3.5ZG2	ABPR5-M-S-PD-0137	V17491-ICND-003
XLAB10CT401	HP	Feedwater Inlet Test Thermowell	N/A	131.7	1910	332.8	631	93.8	1360.1	105.4	221.8	N/A	N/A	1" (25.4mm) SW	SA-105	1/2" FNPT	Tapered, Stepless, Socket Weld	JMS Southeast	DWGV1161AQ1B.875U3.5ZG2	ABPR5-M-S-PD-0137	V17491-ICND-003
XLAB10CT001	HP	Feedwater Inlet Temperature Element	-200 to 900 °C	131.7	1910	332.8	631	93.8	1360.1	105.4	221.8	N/A	Type E, mV	1/4" (6.35mm) Dia.	316SS Sheath / MgO Insulation	3/4" FNPT / 1/2" FNPT	Elec. Conn. / Inst. Conn.	JMS Southeast	DWGV1162EL5N3M	ABPR5-M-S-PD-0137	V17491-ICND-003
XLAB10CT001	HP	Feedwater Inlet Temperature Element Thermowell	N/A	131.7	1910	332.8	631	93.8	1360.1	105.4	221.8	N/A	N/A	1" (25.4mm) SW	SA-105	1/2" FNPT	Tapered, Stepless, Socket Weld	JMS Southeast	DWGV1161AQ1B.875U3.5ZG2	ABPR5-M-S-PD-0137	V17491-ICND-003
XLAB10CP001	HP	Feedwater Inlet Pressure Transmitter	0 (4 mA) to 140 (20 mA) barg	131.7	1910	332.8	631	93.8	1360.1	105.4	221.8	Loop Powered	4-20mA	N/A	316L SS	1/2" MNPT	Pressure	Foxboro	IGP10-T22E1F-H1T	ABPR5-M-S-PD-0137	V17491-ICND-003
XLAB10CP501	HP	Feedwater Inlet Pressure Gauge	0 to 200 barg	131.7	1910	332.8	631	93.8	1360.1	105.4	221.8	N/A	Visual	4 1/2" (114mm) Dial Face	316SS	1/2" MNPT	Lower Stem Connection	Ashcroft	45-1259SD-04L-XOSSG	ABPR5-M-S-PD-0137	V17491-ICND-003
XLAB31CF001	HP	Feedwater Inlet Flow Element unit#1	0 to 73,019.60 kg/hr	131.7	1910	121.1	250	93.8	1360.1	105.4	221.8	N/A	N/A	6"	SA-106 Gr. B	Butt Weld	Flow Nozzle	Vickery-Simms	VFN-1290-2A	ABPR5-M-S-PD-0137	V17491-ICND-003
XLAB31CF002	HP	Feedwater Inlet Flow Transmitter unit#1	0 (4 mA) to 254 (20 mA) mmwc	131.7	1910	121.1	250	93.8	1360.1	105.4	221.8	Loop Powered	4-20mA	N/A	316L SS	1/2" FNPT	Differential Pressure	Foxboro	IDP10-T22A01F-M3H1T	ABPR5-M-S-PD-0137	V17491-ICND-003
XLAB32CF001	HP	Feedwater Inlet Flow Element unit#2	0 to 73,019.60 kg/hr	131.7	1910	121.1	250	93.8	1360.1	105.4	221.8	N/A	N/A	6"	SA-106 Gr. B	Butt Weld	Flow Nozzle	Vickery-Simms	VFN-1290-2B	ABPR5-M-S-PD-0137	V17491-ICND-003
XLAB32CF002	HP	Feedwater Inlet Flow Transmitter unit#2	0 (4 mA) to 254 (20 mA) mmwc	131.7	1910	121.1	250	93.8	1360.1	105.4	221.8	Loop Powered	4-20mA	N/A	316L SS	1/2" FNPT	Differential Pressure	Foxboro	IDP10-T22A01F-M3H1T	ABPR5-M-S-PD-0137	V17491-ICND-003
XHAH50CT401	LP	Steam Outlet Test Thermowell	N/A	11.0	160	255.6	492	9.4	135.9	247.7	477.9	N/A	N/A	1.5" (38.1mm) Actual OD	SA-105	1/2" FNPT	Tapered, Stepless, Weld-In	JMS Southeast	DWGV1169N3	ABPR5-M-S-PD-0138	V17491-ICND-004
XHAH50CT501	LP	Steam Outlet Temperature Indicator	0 to 300 °C	11.0	160	255.6	492	9.4	135.9	247.7	477.9	N/A	Visual	5" (127mm) Dial Face	316SS	1/2" MNPT	Bi-Metal	Ashcroft	DWGV1167L9N3.50-300C	ABPR5-M-S-PD-0138	V17491-ICND-004
XHAH50CT501	LP	Steam Outlet Temperature Indicator Thermowell	N/A	11.0	160	255.6	492	9.4	135.9	247.7	477.9	N/A	N/A	1.5" (38.1mm) Actual OD	SA-105	1/2" FNPT	Tapered, Stepless, Weld-In	JMS Southeast	DWGV1160U3T1G3	ABPR5-M-S-PD-0138	V17491-ICND-004
XHAH50CT001	LP	Steam Outlet Temperature Element	-200 to 900 °C	11.0	160	255.6	492	9.4	135.9	247.7	477.9	N/A	Type E, mV	1/4" (6.35mm) Dia.	316SS Sheath / MgO Insulation	3/4" FNPT / 1/2" FNPT	Elec. Conn. / Inst. Conn.	JMS Southeast	DWGV1162EL5.5N3M	ABPR5-M-S-PD-0138	V17491-ICND-004
XHAH50CT001	LP	Steam Outlet Temperature Element Thermowell	N/A	11.0	160	255.6	492	9.4	135.9	247.7	477.9	N/A	N/A	1.5" (38.1mm) Actual OD	SA-105	1/2" FNPT	Tapered, Stepless, Weld-In	JMS Southeast	DWGV1160U3T1G2	ABPR5-M-S-PD-0138	V17491-ICND-004
XHAH50CP001	LP	Steam Outlet Pressure Transmitter	0 (4 mA) to 15 (20 mA) barg	11.0	160	255.6	492	9.4	135.9	247.7	477.9	Loop Powered	4-20mA	N/A	316L SS	1/2" MNPT	Pressure	Foxboro	IGP10-T22D1F-H1T	ABPR5-M-S-PD-0138	V17491-ICND-004
XHAH50CP501	LP	Steam Outlet Pressure Gauge	0 to 16 barg	11.0	160	255.6	492	9.4	135.9	247.7	477.9	N/A	Visual	4 1/2" (114mm) Dial Face	316SS	1/2" MNPT	Lower Stem Connection	Ashcroft	45-1259SD-04L-XOSSG	ABPR5-M-S-PD-0138	V17491-ICND-004
XHAH50CT002	LP	Steam Outlet Temperature Element (Drain Line)	-200 to 900 °C	11.0	160	255.6	492	9.4	135.9	247.7	477.9	N/A	Type E, mV	1/4" (6.35mm) Dia.	316SS Sheath / MgO Insulation	3/4" FNPT / 1/2" FNPT	Elec. Conn. / Inst. Conn.	JMS Southeast	DWGV1162EL5.5N3M	ABPR5-M-S-PD-0138	V17491-ICND-004
XHAH50CT002	LP	Steam Outlet Temperature Element Thermowell (Drain Line)	N/A	11.0	160	255.6	492	9.4	135.9	247.7	477.9	N/A	N/A	1.5" (38.1mm) Actual OD	SA-105	1/2" FNPT	Tapered, Stepless, Weld-In	JMS Southeast	DWGV1160U3T1G2	ABPR5-M-S-PD-0138	V17491-ICND-004
XHAD50CL501	LP	Drum Level Gauge / Water Column Assembly	N/A	12.4	180	193.3	380	8.6	124.4	178.0	352.4	N/A	Visual	Min. 2.5"	Steel / Water Column	1 1/2" SW	Reflex Glass	Quest-Tec Solutions, Inc	ST-350-62	ABPR5-M-S-PD-0138	V17491-ICND-004
XHAD50CL004	LP	Drum Remote Level Indicator Assembly	N/A	12.4	180	193.3	380	8.6	124.4	178.0	352.4	230Vac	Dry Contact	Min. 2.5"	Steel / Water Column	1 1/2" SW	Conductivity Probe	Quest-Tec Solutions, Inc	LT-210-10	ABPR5-M-S-PD-0138	V17491-ICND-004
XHAD50CL502	LP	**Drum Remote Level Indicator (located in control room)**	N/A	12.4	180	193.3	380	8.6	124.4	178.0	352.4	230Vac	24Vdc	N/A	N/A	N/A	N/A	Quest-Tec Solutions, Inc	LTI-210-10	ABPR5-M-S-PD-0138	V17491-ICND-004
XHAD50CL001	LP	Drum Level Transmitter	-787 (4 mA) to 0 (20 mA) mmwc	12.4	180	193.3	380	8.6	124.4	178.0	352.4	Loop Powered	4-20mA	N/A	316L SS	1/2" FNPT	Differential Pressure	Foxboro	IDP10-T22B01F-M3H1T	ABPR5-M-S-PD-0138	V17491-ICND-004
XHAD50BB501	LP	Drum Level Transmitter Condensate Pot	N/A	12.4	180	193.3	380	8.6	124.4	178.0	352.4	N/A	N/A	3" x 11" (76.2 x 279.4mm)	SA-106 Gr. B	1/2" SW / 1/2" FNPT / 1/2" FNPT	Side / Top / Bottom	Quality Products & Sales	3" x 11" A105 S/80	ABPR5-M-S-PD-0138	V17491-ICND-004
XHAD50CL002	LP	Drum Level Transmitter	-787 (4 mA) to 0 (20 mA) mmwc	12.4	180	193.3	380	8.6	124.4	178.0	352.4	Loop Powered	4-20mA	N/A	316L SS	1/2" FNPT	Differential Pressure	Foxboro	IDP10-T22B01F-M3H1T	ABPR5-M-S-PD-0138	V17491-ICND-004
XHAD50BB502	LP	Drum Level Transmitter Condensate Pot	N/A	12.4	180	193.3	380	8.6	124.4	178.0	352.4	N/A	N/A	3" x 11" (76.2 x 279.4mm)	SA-106 Gr. B	1/2" SW / 1/2" FNPT / 1/2" FNPT	Side / Top / Bottom	Quality Products & Sales	3" x 11" A105 S/80	ABPR5-M-S-PD-0138	V17491-ICND-004
XHAD50CL003	LP	Drum Level Transmitter	-787 (4 mA) to 0 (20 mA) mmwc	12.4	180	193.3	380	8.6	124.4	178.0	352.4	Loop Powered	4-20mA	N/A	316L SS	1/2" FNPT	Differential Pressure	Foxboro	IDP10-T22B01F-M3H1T	ABPR5-M-S-PD-0138	V17491-ICND-004
XHAD50BB503	LP	Drum Level Transmitter Condensate Pot	N/A	12.4	180	193.3	380	8.6	124.4	178.0	352.4	N/A	N/A	3" x 11" (76.2 x 279.4mm)	SA-106 Gr. B	1/2" SW / 1/2" FNPT / 1/2" FNPT	Side / Top / Bottom	Quality Products & Sales	3" x 11" A105 S/80	ABPR5-M-S-PD-0138	V17491-ICND-004
XHAD50CP501	LP	Drum Pressure Gauge	0 to 25 barg	12.4	180	193.3	380	8.6	124.4	178.0	352.4	N/A	Visual	4 1/2" (114mm) Dial Face	316SS	1/2" MNPT	Lower Stem Connection	Ashcroft	45-1259SD-04L-XOSSG	ABPR5-M-S-PD-0138	V17491-ICND-004
XHAD50CP001	LP	Drum Pressure Transmitter	0 (4 mA) to 15 (20 mA) barg	12.4	180	193.3	380	8.6	124.4	178.0	352.4	Loop Powered	4-20mA	N/A	316L SS	1/2" MNPT	Pressure	Foxboro	IGP10-T22D1F-H1T	ABPR5-M-S-PD-0138	V17491-ICND-004
XHAD50CP002	LP	Drum Pressure Transmitter	0 (4 mA) to 15 (20 mA) barg	12.4	180	193.3	380	8.6	124.4	178.0	352.4	Loop Powered	4-20mA	N/A	316L SS	1/2" MNPT	Pressure	Foxboro	IGP10-T22D1F-H1T	ABPR5-M-S-PD-0138	V17491-ICND-004
XHAC50CT501	LP	Feedwater Outlet Temperature Indicator	0 to 300 °C	29.3	425	234.4	454	9.6	139.0	172.1	341.7	N/A	Visual	5" (127mm) Dial Face	316SS	1/2" MNPT	Bi-Metal	Ashcroft	DWGV1167L9N50-300C	ABPR5-M-S-PD-0138	V17491-ICND-004
XHAC50CT501	LP	Feedwater Outlet Temperature Indicator Thermowell	N/A	29.3	425	234.4	454	9.6	139.0	172.1	341.7	N/A	N/A	1" (25.4mm) SW	SA-105	1/2" FNPT	Tapered, Stepless, Socket Weld	JMS Southeast	DWGV1161AQ1B.875U2.5ZG2	ABPR5-M-S-PD-0138	V17491-ICND-004
XHAC50CT001	LP	Feedwater Outlet Temperature Element	-200 to 900 °C	29.3	425	234.4	454	9.6	139.0	172.1	341.7	N/A	Type E, mV	1/4" (6.35mm) Dia.	316SS Sheath / MgO Insulation	3/4" FNPT / 1/2" FNPT	Elec. Conn. / Inst. Conn.	JMS Southeast	DWGV1162EL4N3M	ABPR5-M-S-PD-0138	V17491-ICND-004
XHAC50CT001	LP	Feedwater Outlet Temperature Element Thermowell	N/A	29.3	425	234.4	454	9.6	139.0	172.1	341.7	N/A	N/A	1" (25.4mm) SW	SA-105	1/2" FNPT	Tapered, Stepless, Socket Weld	JMS Southeast	DWGV1161AQ1B.875U2.5ZG2	ABPR5-M-S-PD-0138	V17491-ICND-004
XLAB50CT401	LP	Feedwater Inlet Test Thermowell	N/A	29.3	425	234.4	454	15.2	220.5	104.9	220.8	N/A	N/A	1" (25.4mm) SW	SA-105	1/2" FNPT	Tapered, Stepless, Socket Weld	JMS Southeast	DWGV1161AQ1B.875U2.5ZG2	ABPR5-M-S-PD-0138	V17491-ICND-004
XLAB50CT001	LP	Feedwater Inlet Temperature Element	-200 to 900 °C	29.3	425	234.4	454	15.2	220.5	104.9	220.8	N/A	Type E, mV	1/4" (6.35mm) Dia.	316SS Sheath / MgO Insulation	3/4" FNPT / 1/2" FNPT	Elec. Conn. / Inst. Conn.	JMS Southeast	DWGV1162EL4N3M	ABPR5-M-S-PD-0138	V17491-ICND-004
XLAB50CT001	LP	Feedwater Inlet Temperature Element Thermowell	N/A	29.3	425	234.4	454	15.2	220.5	104.9	220.8	N/A	N/A	1" (25.4mm) SW	SA-105	1/2" FNPT	Tapered, Stepless, Socket Weld	JMS Southeast	DWGV1161AQ1B.875U2.5ZG2	ABPR5-M-S-PD-0138	V17491-ICND-004
XLAB50CP501	LP	Feedwater Inlet Pressure Gauge	0 to 40 barg	29.3	425	234.4	454	15.2	220.5	104.9	220.8	N/A	Visual	4 1/2" (114mm) Dial Face	316SS	1/2" MNPT	Lower Stem Connection	Ashcroft	45-1259SD-04L-XOSSG	ABPR5-M-S-PD-0138	V17491-ICND-004
XLAB50CP001	LP	Feedwater Inlet Pressure Transmitter	0 (4 mA) to 35 (20 mA) barg	29.3	425	234.4	454	15.2	220.5	104.9	220.8	Loop Powered	4-20mA	N/A	316L SS	1/2" MNPT	Pressure	Foxboro	IGP10-T22E1F-H1T	ABPR5-M-S-PD-0138	V17491-ICND-004
XLAB61CF001	LP	Feedwater Inlet Flow Element	0 to 43,000 kg/hr	29.3	425	121.1	250	15.2	220.5	104.9	220.8	N/A	N/A	3"	SA-106 Gr. B	Butt Weld	Flow Nozzle	Vickery-Simms	VFN-1290-3	ABPR5-M-S-PD-0138	V17491-ICND-004
XLAB61CF002	LP	Feedwater Inlet Flow Transmitter	0 (4 mA) to 1480.2 (20 mA) mmwc	29.3	425	121.1	250	15.2	220.5	104.9	220.8	Loop Powered	4-20mA	N/A	316L SS	1/2" FNPT	Differential Pressure	Foxboro	IDP10-T22B01F-M3H1T	ABPR5-M-S-PD-0138	V17491-ICND-004
XLAB62CF001	LP	Feedwater Inlet Flow Element	0 to 43,000 kg/hr	29.3	425	121.1	250	15.2	220.5	104.9	220.8	N/A	N/A	3"	SA-106 Gr. B	Butt Weld	Flow Nozzle	Vickery-Simms	VFN-1290-3	ABPR5-M-S-PD-0138	V17491-ICND-004
XLAB62CF002	LP	Feedwater Inlet Flow Transmitter	0 (4 mA) to 1480.2 (20 mA) mmwc	29.3	425	121.1	250	15.2	220.5	104.9	220.8	Loop Powered	4-20mA	N/A	316L SS	1/2" FNPT	Differential Pressure	Foxboro	IDP10-T22B01F-M3H1T	ABPR5-M-S-PD-0138	V17491-ICND-004
XLCA50CT002	DA	Deaerator Inlet Temperature Element	-200 to 900 °C	27.6	400	176.7	350	N/A	N/A	N/A	N/A	N/A	Type E, mV	1/4" (6.35mm) Dia.	316SS Sheath / MgO Insulation	3/4" FNPT / 1/2" FNPT	Elec. Conn. / Inst. Conn.	JMS Southeast	DWGV1162EL5.5N3M	ABPR5-M-S-PD-0139	V17491-ICND-005
XLCA50CT002	DA	Deaerator Inlet Temperature Element Thermowell	N/A	27.6	400	176.7	350	N/A	N/A	N/A	N/A	N/A	N/A	1" (25.4mm) SW	SA-105	1/2" FNPT	Tapered, Stepless, Socket Weld	JMS Southeast	DWGV1161AQ1B.875U4ZG2	ABPR5-M-S-PD-0139	V17491-ICND-005
XLAA11CP501	DA	Deaerator Pressure Gauge	0 to 10 barg	6.9	100	176.7	350	N/A	N/A	N/A	N/A	N/A	Visual	4 1/2" (114mm) Dial Face	316SS	1/2" MNPT	Lower Stem Connection	Ashcroft	45-1259SD-04L-XOSSG	ABPR5-M-S-PD-0139	V17491-ICND-005
XLAA11CP001	DA	Deaerator Pressure Transmitter	0 (4 mA) to 8 (20 mA) barg	6.9	100	176.7	350	N/A	N/A	N/A	N/A	Loop Powered	4-20mA	N/A	316L SS	1/2" MNPT	Pressure	Foxboro	IGP10-T22D1F-H1T	ABPR5-M-S-PD-0139	V17491-ICND-005
XLAA10CT001	DA	Storage Tank Temperature Element	-200 to 900 °C	6.9	100	176.7	350	N/A	N/A	N/A	N/A	N/A	Type E, mV	1/4" (6.35mm) Dia.	316SS Sheath / MgO Insulation	3/4" FNPT / 1/2" FNPT	Elec. Conn. / Inst. Conn.	JMS Southeast	DWGV1162EL9N6M	ABPR5-M-S-PD-0139	V17491-ICND-005
XLAA10CT001	DA	Storage Tank Temperature Element Thermowell	N/A	6.9	100	176.7	350	N/A	N/A	N/A	N/A	N/A	N/A	1" (25.4mm) SW	SA-105	1/2" FNPT	Tapered, Stepless, Socket Weld	JMS Southeast	DWGV1161AQ1B.5U7.5ZG2	ABPR5-M-S-PD-0139	V17491-ICND-005
XLAA10CT002	DA	Storage Tank Temperature Element	-200 to 900 °C	6.9	100	176.7	350	N/A	N/A	N/A	N/A	N/A	Type E, mV	1/4" (6.35mm) Dia.	316SS Sheath / MgO Insulation	3/4" FNPT / 1/2" FNPT	Elec. Conn. / Inst. Conn.	JMS Southeast	DWGV1162EL9N6M	ABPR5-M-S-PD-0139	V17491-ICND-005
XLAA10CT002	DA	Storage Tank Temperature Element Thermowell	N/A	6.9	100	176.7	350	N/A	N/A	N/A	N/A	N/A	N/A	1" (25.4mm) SW	SA-105	1/2" FNPT	Tapered, Stepless, Socket Weld	JMS Southeast	DWGV1161AQ1B.5U7.5ZG2	ABPR5-M-S-PD-0139	V17491-ICND-005
XLAA10CL501	DA	Storage Tank Level Gauge	N/A	6.9	100	176.7	350	N/A	N/A	N/A	N/A	N/A	Visual	Min. 2.5"	Steel / Water Column	1 1/2" SW	Reflex Glass	Quest-Tec Solutions, Inc	ST-350-86	ABPR5-M-S-PD-0139	V17491-ICND-005
XLAA10CL001	DA	Storage Tank Level Transmitter	-3606.8 (4 mA) to 0 (20 mA) mmwc	6.9	100	176.7	350	N/A	N/A	N/A	N/A	Loop Powered	4-20mA	N/A	316L SS	1/2" FNPT	Differential Pressure	Foxboro	IDP10-T22B01F-M3H1T	ABPR5-M-S-PD-0139	V17491-ICND-005
XLAA10BB501	DA	Storage Tank Level Transmitter Condensate Pot	N/A	6.9	100	176.7	350	N/A	N/A	N/A	N/A	N/A	N/A	3" x 11" (76.2 x 279.4mm)	SA-106 Gr. B	1/2" SW / 1/2" FNPT / 1/2" FNPT	Side / Top / Bottom	Quality Products & Sales	3" x 11" A105 S/80	ABPR5-M-S-PD-0139	V17491-ICND-005
XLAA10CL002	DA	Storage Tank Level Transmitter	-3606.8 (4 mA) to 0 (20 mA) mmwc	6.9	100	176.7	350	N/A	N/A	N/A	N/A	Loop Powered	4-20mA	N/A	316L SS	1/2" FNPT	Differential Pressure	Foxboro	IDP10-T22B01F-M3H1T	ABPR5-M-S-PD-0139	V17491-ICND-005
XLAA10BB502	DA	Storage Tank Level Transmitter Condensate Pot	N/A	6.9	100	176.7	350	N/A	N/A	N/A	N/A	N/A	N/A	3" x 11" (76.2 x 279.4mm)	SA-106 Gr. B	1/2" SW / 1/2" FNPT / 1/2" FNPT	Side / Top / Bottom	Quality Products & Sales	3" x 11" A105 S/80	ABPR5-M-S-PD-0139	V17491-ICND-005
	DA																				
XLAA10CF501	DA	Storage Tank Inlet Flow Element	0 to 27,500 kg/hr	29.3	425	234.4	454	9.6	139.0	172.0	341.6	N/A	N/A	3"	SA-106 Gr. B	Butt Weld	Flow Nozzle	Vickery-Simms	VFN-1290-4	ABPR5-M-S-PD-0139	V17491-ICND-005
XLAA10CF001	DA	Storage Tank Inlet Flow Transmitter	0 (4 mA) to 386.4 (20 mA) mmwc	29.3	425	234.4	454	9.6	139.0	172.0	341.6	Loop Powered	4-20mA	N/A	316L SS	1/2" FNPT	Differential Pressure	Foxboro	IDP10-T22A01F-M3H1T	ABPR5-M-S-PD-0139	V17491-ICND-005
XLCQ10CT001	BD	Blowdown Tank Temperature Element	-200 to 900 °C	3.4	50	148.9	300	N/A	N/A	N/A	N/A	N/A	Type E, mV	1/4" (6.35mm) Dia.	316SS Sheath / MgO Insulation	3/4" FNPT / 1/2" FNPT	Elec. Conn. / Inst. Conn.	JMS Southeast	DWGV1162EL9N6M	ABPR5-M-S-PD-0140	V17491-ICND-006
XLCQ10CT001	BD	Blowdown Tank Temperature Element Thermowell	N/A	3.4	50	148.9	300	N/A	N/A	N/A	N/A	N/A	N/A	1" (25.4mm) SW	SA-105	1/2" FNPT	Tapered, Stepless, Socket Weld	JMS Southeast	DWGV1161AQ1B.5U7.5ZG2	ABPR5-M-S-PD-0140	V17491-ICND-006

CUSTOMER TAG NUMBER	SYSTEM	SERVICE DESCRIPTION	CALIBRATION / MEASUREMENT RANGE	DESIGN PRESS. (BARG)	DESIGN PRESS. (PSIG)	DESIGN TEMP. (°C)	DESIGN TEMP. (°F)	MAXIMUM OPERATING PRESS. (BARG)	MAXIMUM OPERATING PRESS. (PSIG)	MAXIMUM OPERATING TEMP. (°C)	MAXIMUM OPERATING TEMP. (°F)	POWER REQUIREMENT	SIGNAL TYPE	NOMINAL SIZE	MATERIAL OF CONSTRUCTION	PROCESS CONNECTION SIZE	TYPE	MANUFACTURER	MODEL NUMBER	PROJECT CONTROL NUMBER	P&ID
XLCQ10CT501	BD	Blowdown Tank Temperature Indicator	10 to 200 °C	3.4	50	148.9	300	N/A	N/A	N/A	N/A	N/A	Visual	5" (127mm) Dial Face	316SS	1/2" MNPT	Bi-Metal	JMS Southeast	DWGV1167L15N60-200C	ABPR5-M-S-PD-0140	V17491-ICND-006
XLCQ10CT501	BD	Blowdown Tank Temperature Indicator Thermowell	N/A	3.4	50	148.9	300	N/A	N/A	N/A	N/A	N/A	N/A	1" (25.4mm) SW	SA-105	1/2" FNPT	Tapered, Stepless, Socket Weld	JMS Southeast	DWGV1161AQ1B.875U7.5ZG2	ABPR5-M-S-PD-0140	V17491-ICND-006
XLCQ10CP501	BD	Blowdown Tank Pressure Gauge	0 to 6 barg	3.4	50	148.9	300	N/A	N/A	N/A	N/A	N/A	Visual	4 1/2" (114mm) Dial Face	316SS	1/2" MNPT	Lower Stem Connection	Ashcroft	45-1259SD-04L-XOSSG	ABPR5-M-S-PD-0140	V17491-ICND-006
XLCQ10CL501	BD	Blowdown Tank Level Gauge	N/A	3.4	50	148.9	300	N/A	N/A	N/A	N/A	N/A	Visual	Min. 2.5"	Steel / Water Column	1 1/2" SW	Reflex Glass	Quest-Tec Solutions, Inc	ST-350-73	ABPR5-M-S-PD-0140	V17491-ICND-006
XLCQ10CL201	BD	Blowdown Tank Level Switch	N/A	3.4	50	148.9	300	N/A	N/A	N/A	N/A	N/A	N/A	N/A	SA-106 Gr. B	1 1/2" SW	Conductivity Probe	Quest-Tec	LT-310	ABPR5-M-S-PD-0140	V17491-ICND-006
XLCQ10CL202	BD	Blowdown Tank Level Switch	N/A	3.4	50	148.9	300	N/A	N/A	N/A	N/A	N/A	N/A	N/A	SA-106 Gr. B	1 1/2" SW	Conductivity Probe	Quest-Tec	LT-310	ABPR5-M-S-PD-0140	V17491-ICND-006
																				ABPR5-M-S-PD-0140	
XLCQ10CT002	BD	Blowdown Tank Discharge Temperature Element	-200 to 900 °C	3.4	50	148.9	300	N/A	N/A	N/A	N/A	N/A	Type E, mV	1/4" (6.35mm) Dia.	316SS Sheath / MgO Insulation	3/4" FNPT / 1/2" FNPT	Elec. Conn. / Inst. Conn.	JMS Southeast	DWGV1162EL4N3M	ABPR5-M-S-PD-0140	V17491-ICND-006
XLCQ10CT002	BD	Blowdown Tank Discharge Temperature Element Thermowell	N/A	3.4	50	148.9	300	N/A	N/A	N/A	N/A	N/A	N/A	1" (25.4mm) SW	SA-105	1/2" FNPT	Tapered, Stepless, Socket Weld	JMS Southeast	DWGV1161AQ1B.875U2.5ZG2	ABPR5-M-S-PD-0140	V17491-ICND-006
XHNB10CP001	FG	Flue Gas Pressure Transmitter	0 (4 mA) to 850mm (20 mA) H_2O	762 mm H_2O	762 mm H_2O	648.9	1200	508 mm H_2O	508 mm H_2O	599.4	1111.0	Loop Powered	4-20mA	N/A	316L SS	1/2" MNPT	Pressure	Foxboro	IGP20-T22B01F-M3H1T	ABPR5-M-S-PD-0136	V17491-ICND-002
XHNB10CP002	FG	Flue Gas Pressure Transmitter	0 (4 mA) to 850mm (20 mA) H_2O	762 mm H_2O	762 mm H_2O	648.9	1200	508 mm H_2O	508 mm H_2O	599.4	1111.0	Loop Powered	4-20mA	N/A	316L SS	1/2" MNPT	Pressure	Foxboro	IGP20-T22B01F-M3H1T	ABPR5-M-S-PD-0136	V17491-ICND-002
XHNB10CP003	FG	Flue Gas Pressure Transmitter	0 (4 mA) to 850mm (20 mA) H_2O	762 mm H_2O	762 mm H_2O	648.9	1200	508 mm H_2O	508 mm H_2O	599.4	1111.0	Loop Powered	4-20mA	N/A	316L SS	1/2" MNPT	Pressure	Foxboro	IGP20-T22B01F-M3H1T	ABPR5-M-S-PD-0136	V17491-ICND-002
XHNB10CP004	FG	Flue Gas Pressure Transmitter	0 (4 mA) to 850mm (20 mA) H_2O	762 mm H_2O	762 mm H_2O	648.9	1200	508 mm H_2O	508 mm H_2O	599.4	1111.0	Loop Powered	4-20mA	N/A	316L SS	1/2" MNPT	Pressure	Foxboro	IGP20-T22B01F-M3H1T	ABPR5-M-S-PD-0136	V17491-ICND-002
XHNA11CT001	FG	Flue Gas Temp. Into MB #5801 Temperature Element	-200 to 900 °C	N/A	N/A	648.9	1200	N/A	N/A	599.4	1111.0	N/A	Type E, mV	1/4" (6.35mm) Dia.	316SS Sheath / MgO Insulation	3/4" FNPT / 1/2" FNPT	Elec. Conn. / Inst. Conn.	JMS Southeast	DWGV1164EN2.5M	ABPR5-M-S-PD-0136	V17491-ICND-002
XHNA11CT001	FG	Flue Gas Temp. Into MB #5801 Temperature Element Thermowell	N/A	762 mm H_2O	762 mm H_2O	648.9	1200	508 mm H_2O	508 mm H_2O	599.4	1111.0	N/A	N/A	1" Nominal, Sch. 40 Pipe	316 Gr. L	2" MNPT	Protection Tube	JMS Southeast	DWGV1164EN2.5M	ABPR5-M-S-PD-0136	V17491-ICND-002
XHNA11CT002	FG	Flue Gas Temp. Into MB #5801 Temperature Element	-200 to 900 °C	N/A	N/A	648.9	1200	N/A	N/A	599.4	1111.0	N/A	Type E, mV	1/4" (6.35mm) Dia.	316SS Sheath / MgO Insulation	3/4" FNPT / 1/2" FNPT	Elec. Conn. / Inst. Conn.	JMS Southeast	DWGV1164EN2.5M	ABPR5-M-S-PD-0136	V17491-ICND-002
XHNA11CT002	FG	Flue Gas Temp. Into MB #5801 Temperature Element Thermowell	N/A	762 mm H_2O	762 mm H_2O	648.9	1200	508 mm H_2O	508 mm H_2O	599.4	1111.0	N/A	N/A	1" Nominal, Sch. 40 Pipe	316 Gr. L	2" MNPT	Protection Tube	JMS Southeast	DWGV1164EN2.5M	ABPR5-M-S-PD-0136	V17491-ICND-002
XHNA11CT003	FG	Flue Gas Temp. Into MB #5801 Temperature Element	-200 to 900 °C	N/A	N/A	648.9	1200	N/A	N/A	599.4	1111.0	N/A	Type E, mV	1/4" (6.35mm) Dia.	316SS Sheath / MgO Insulation	3/4" FNPT / 1/2" FNPT	Elec. Conn. / Inst. Conn.	JMS Southeast	DWGV1164EN2.5M	ABPR5-M-S-PD-0136	V17491-ICND-002
XHNA11CT003	FG	Flue Gas Temp. Into MB #5801 Temperature Element Thermowell	N/A	762 mm H_2O	762 mm H_2O	648.9	1200	508 mm H_2O	508 mm H_2O	599.4	1111.0	N/A	N/A	1" Nominal, Sch. 40 Pipe	316 Gr. L	2" MNPT	Protection Tube	JMS Southeast	DWGV1164EN2.5M	ABPR5-M-S-PD-0136	V17491-ICND-002
XHNA11CT004	FG	Flue Gas Temp. Into MB #5801 Temperature Element	-200 to 900 °C	N/A	N/A	648.9	1200	N/A	N/A	599.4	1111.0	N/A	Type E, mV	1/4" (6.35mm) Dia.	316SS Sheath / MgO Insulation	3/4" FNPT / 1/2" FNPT	Elec. Conn. / Inst. Conn.	JMS Southeast	DWGV1164EN2.5M	ABPR5-M-S-PD-0136	V17491-ICND-002
XHNA11CT004	FG	Flue Gas Temp. Into MB #5801 Temperature Element Thermowell	N/A	762 mm H_2O	762 mm H_2O	648.9	1200	508 mm H_2O	508 mm H_2O	599.4	1111.0	N/A	N/A	1" Nominal, Sch. 40 Pipe	316 Gr. L	2" MNPT	Protection Tube	JMS Southeast	DWGV1164EN2.5M	ABPR5-M-S-PD-0136	V17491-ICND-002
XHNE10CT001	FG	Flue Gas Temp. Out Of STACK Temperature Element	-200 to 900 °C	N/A	N/A	148.9	300	N/A	N/A	122.2	252.0	N/A	Type E, mV	1/4" (6.35mm) Dia.	316SS Sheath / MgO Insulation	3/4" FNPT / 1/2" FNPT	Elec. Conn. / Inst. Conn.	JMS Southeast	DWGV1164EN2.5M	ABPR5-M-S-PD-0136	V17491-ICND-002
XHNE10CT001	FG	Flue Gas Temp. Out Of STACK Temperature Element Thermowell	N/A	762 mm H_2O	762 mm H_2O	148.9	300	508 mm H_2O	508 mm H_2O	122.2	252.0	N/A	N/A	1" Nominal, Sch. 40 Pipe	316 Gr. L	2" MNPT	Protection Tube	JMS Southeast	DWGV1164EN2.5M	ABPR5-M-S-PD-0136	V17491-ICND-002
XHNE10CT002	FG	Flue Gas Temp. Out Of STACK Temperature Element	-200 to 900 °C	N/A	N/A	148.9	300	N/A	N/A	122.2	252.0	N/A	Type E, mV	1/4" (6.35mm) Dia.	316SS Sheath / MgO Insulation	3/4" FNPT / 1/2" FNPT	Elec. Conn. / Inst. Conn.	JMS Southeast	DWGV1164EN2.5M	ABPR5-M-S-PD-0136	V17491-ICND-002
XHNE10CT002	FG	Flue Gas Temp. Out Of STACK Temperature Element Thermowell	N/A	762 mm H_2O	762 mm H_2O	148.9	300	508 mm H_2O	508 mm H_2O	122.2	252.0	N/A	N/A	1" Nominal, Sch. 40 Pipe	316 Gr. L	2" MNPT	Protection Tube	JMS Southeast	DWGV1164EN2.5M	ABPR5-M-S-PD-0136	V17491-ICND-002

13551 Triton Park Blvd., Suite 2000
Louisville, Kentucky 40223

GENERAL NOTES & DATA
For
Amata B.Grimm Power (Rayong) 5 Limited

For

Vogt Power Job No. 17491
Vogt Power Document No. V17491-SENF-001

Prepared by: Poonsap Homniyom, Project Engineer

Reviewed by: Rattiya Pimchaichon, Product Engineer

Approved by: Matt Kreis, Director of Engineering

Number	Date	REVISION RECORD	Originator
0	9-Sep-16	Initial Release	PH
1	27-Sep-16	Update Insulation Thickness for Box 3	PH

OWNER: Amata B.Grimm Power (Rayong) 5 Limited

PROJECT: ABPR5 Combined Cycle Cogeneration Plant Project

CONTRACTOR: Sumitomo Corporation

TITLE: HRSG GENERAL NOTES AND DATA

PROJECT CONTROL NO. ABPR5-K-S-HA-152 REV. 1

1. General Notes

1.1 Vogt Power International assumes no responsibility for defects in or failure of foundations or accessory equipment unless same is part of the contract.

1.2 Vogt Power International will not be responsible for any injury and/or damage resulting from the use of designs on these drawings of anything not actually furnished by Vogt Power International, whether so specifically indicated or not.

1.3 Do not scale any drawings supplied for this contract. Use Figure dimensions only.

1.4 "NF" indicates material not furnished by Vogt Power International or its vendors.

1.5 Except as permitted in Doc. V17491-APNF-001-00, Allowable Forces and Moments LB & SB - Pipe Stress Interface, or as agreed upon by Vogt Power International, Customer shall arrange pipe and valve connections to boiler and component parts so that no pipe loads, valve loads, expansion strains, or other stresses are imposed upon boiler connections. Reactions on load points as well as forces and moments in the piping at the stress analysis load points must be supplied to Vogt Power International for approval as stated in Doc. V17491-APNF-001-00

1.6 Discharge Lines of Superheater vents and Start-up drains must have outlets open to atmosphere to permit free flow; do not connect to steam traps or heater.

1.7 External blowdown piping connected to Intermittent Blowoff valves shall be suspended to move freely with the expansion movement of boiler pressure parts, placing no strain on blowdown valves.

1.8 All piping to be kept clear of all access doors and walkways for free accessibility.

1.9 The data shown reflect the maximum non-coincident values of pressure and temperature as stated in the contractual operating cases.

1.10 The HRSG is being designed, fabricated and tested to the 2015 Edition of the ASME Boiler Code, Section I. Boiler External Piping is being designed, fabricated and tested to the 2012 Edition of the ASME Boiler Code, Section B31.1. Non-boiler External Piping is being designed, fabricated and tested to the 2014 Edition of the ASME Boiler Code, Section B31.1.

1.11 All flanges are raised face unless otherwise noted on the drawings.

1.12 The hydrostatic test pressure of the HP integral economizers have been set based on Section I, Interpretation: I-89-68.

1.13 Boilers are not registered with the National Board (USA).

1.14 The hydrostatic test pressure is based upon one and one half times the highest maximum allowable working pressure (MAWP) at the temperature during hydro per PG-99 for superheater and evaporator.

1.15 These notes apply only to the Amata B.Grimm Power (Rayong) 5 Limited, ABPR5 Combined Cycle Cogeneration Plant Project, Vogt Power International Project Number 17491.

1.16 Revisions are indicated in Bold and Underlined.

13551 Triton Park Blvd., Suite 2000
Louisville, Kentucky 40223

2. Insulation and Materials

Section Description			Critical Inlet to Column B	Transition Column B to C	Column C to Box 1	Box 1
Insulation	Mat.[1,2]		Superwool Plus Blanket (8 lbs)	Superwool Plus Blanket (8 lbs)	Superwool Plus Blanket (8 lbs)	Superwool Plus Blanket (8 lbs)
	Top	Nom.	5" (127 mm)	5" (127 mm)	5" (127 mm)	5" (127 mm)
		Comp.	4 3/8" (111 mm)	4 3/8" (111 mm)	4 3/8" (111 mm)	4 3/8" (111 mm)
	Side	Nom.	5" (127 mm)	5" (127 mm)	5" (127 mm)	5" (127 mm)
		Comp.	4 3/8" (111 mm)	4 3/8" (111 mm)	4 3/8" (111 mm)	4 3/8" (111 mm)
	Bot.	Nom.	8" (203 mm)	8" (203 mm)	8" (203 mm)	8" (203 mm)
		Comp.	7" (178 mm)	7" (178 mm)	7" (178 mm)	7" (178 mm)
Liner	Mat.[3]		A-240 TP409	A-240 TP409	A-240 TP409	A-240 TP409
	Thk	Top	12 ga (2.70 mm)	16 ga (1.50 mm)	16 ga (1.50 mm)	16 ga (1.50 mm)
		Sides	12 ga (2.70 mm)	16 ga (1.50 mm)	16 ga (1.50 mm)	16 ga (1.50 mm)
		Bottom	12 ga (2.70 mm)	14 ga (2.00 mm)	14 ga (2.00 mm)	14 ga (2.00 mm)
Fasteners	Stud	Mat.[4]	A-479 TP304*	A-479 TP304*	A-479 TP304*	A-479 TP304*
		Size	1/2" (12 mm)	1/2" (12 mm)	1/2" (12 mm)	1/2" (12 mm)
		Spacing	7 1/2" (191 mm)	7 1/2" (191 mm)	15" (381 mm)	15" (381 mm)
		Pitch	Staggered	Staggered	Square	Square
	Nut	Mat[5]	F-594 TP304*	F-594 TP304*	F-594 TP304*	F-594 TP304*
		Series	Heavy Hex	Heavy Hex	Heavy Hex	Regular
	Wash.	Mat.[3]	A-240 TP409	A-240 TP409	A-240 TP409	A-240 TP409
		Thk.	12 ga (3.0 mm)	12 ga (3.0 mm)	12 ga (3.0 mm)	12 ga (3.0 mm)
Casing	Mat.		Carbon Steel	Carbon Steel	Carbon Steel	Carbon Steel
	Thk.		1/4" (6 mm)	1/4" (6 mm)	1/4" (6 mm)	1/4" (6 mm)
Liner Reinforcing Channels		Top	NO	NO	NO	NO
		Sides	NO	NO	NO	NO
		Bottom	NO	NO	NO	NO

See notes at the end of this section

General Notes & Data
Doc. No. V17491-SENF-001

13551 Triton Park Blvd., Suite 2000
Louisville, Kentucky 40223

2. Insulation and Materials (cont.)

Section Description			Box 2	Spool Duct 2-3	Box 3	
Insulation	Mat.[1,2]		Superwool Plus Blanket (8 lbs)	Superwool Plus Blanket (8 lbs)	Superwool Plus Blanket (8 lbs)	
	Top	Nom.	2" (51 mm)	1" (25 mm)	**1/2" (13 mm)**	
		Comp.	1 3/4" (44 mm)	7/8" (22 mm)	**1/2" (13 mm)**	
	Side	Nom.	2" (51 mm)	1" (25 mm)	**1/2" (13 mm)**	
		Comp.	1 3/4" (44 mm)	7/8" (22 mm)	**1/2" (13 mm)**	
	Bot.	Nom.	2" (51 mm)	1" (25 mm)	**1/2" (13 mm)**	
		Comp.	1 3/4" (44 mm)	7/8" (22 mm)	**1/2" (13 mm)**	
Liner	Mat.[3]		Carbon Steel	Carbon Steel	Carbon Steel	
	Thk	Top	14 ga (2.00 mm)	14 ga (2.00 mm)	14 ga (2.00 mm)	
		Sides	14 ga (2.00 mm)	14 ga (2.00 mm)	14 ga (2.00 mm)	
		Bottom	14 ga (2.00 mm)	14 ga (2.00 mm)	14 ga (2.00 mm)	
Fasteners	Stud	Mat.[4]	A-108 TP 1010	A-108 TP 1010	A-108 TP 1010	
		Size	3/8" (10 mm)	3/8" (10 mm)	3/8" (10 mm)	
		Spacing	15" (381 mm)	15" (381 mm)	15" (381 mm)	
		Pitch	Square	Square	Square	
	Nut	Mat[5]	A-593 Gr. A	A-593 Gr. A	A-593 Gr. A	
		Series	Regular	Regular	Regular	
	Wash.	Mat.[5]	A-569	A-569	A-569	
		Thk.	14 ga (2 mm)	14 ga (2.0 mm)	14 ga (2.0 mm)	
Casing	Mat.		Carbon Steel	Carbon Steel	Carbon Steel	
	Thk.		1/4" (6 mm)	1/4" (6 mm)	1/4" (6 mm)	
Liner Reinforcing Channels		Top	NO	NO	NO	
		Sides	NO	NO	NO	
		Bottom	NO	NO	NO	

See notes at the end of this section

General Notes & Data
Doc. No. V17491-SENF-001

13551 Triton Park Blvd., Suite 2000
Louisville, Kentucky 40223

2. Insulation and Materials (cont.)

Notes:

304* denotes 304H or 304 with min. carbon content of 0.04%

[1] Insulation shall be certified as containing NO ASBESTOS
[2] Insulation material permissible substitutes - Kaowool S or Durablanket S
[3] Liner/Washer material permissible substitutes - None
[4] Stud material permissible substitutes - Type 321, 309S or 310S may be substituted for type 304* studs listed. Type 309S or 310S may be substituted for type 321 studs listed.
[5] Nut material permissible substitutes - Type 321, 309S or 310S may be substituted for type 304* nuts listed. Type 309S or 310S may be substituted for type 321 studs listed.

All ducts and casings have an internal design pressure of 17" w.c.

General Notes & Data
Doc. No. V17491-SENF-001

3 Reference Drawings and Data

3. 1 General Arrangement- Right Side Elevation – Drawing V17491-GAND-001

3. 2 General Arrangement-Left Side Elevation – Drawing V17491-GAND-002

3. 3 General Arrangement- Plan View – Drawing V17491-GAND-003

3. 4 Boiler Setting – Right Side Section – Drawing V17491-SEND-001

3. 5 Boiler Setting – Sections A & B – Drawing V17491-SEND-002

3. 6 Boiler Setting – Plan Section – Drawing V17491-SEND-003

3. 7 H.R.S.G. Foundation Diagram – Drawing V17491-FLND-001

3. 8 Piping and Instrumentation Diagrams – P&ID Legend & General Notes - Drawing V17491-ICND-001

3. 9 Piping and Instrumentation Diagrams – Flue Gas P&ID - Drawing V17491-ICND-002

3. 10 Piping and Instrumentation Diagrams – High Pressure P&ID - Drawing V17491-ICND-003

3. 11 Piping and Instrumentation Diagrams – Low Pressure P&ID - Drawing V17491-ICND-004

3. 12 Piping and Instrumentation Diagrams – DA, Storage Tank, and Heat Exchanger P&ID - Drawing V17491-ICND-005

3. 13 Piping and Instrumentation Diagrams – Blowdown, Silencer & PSV Vents and Drain P&ID - Drawing V17491-ICND-006

3. 14 Process Flow Diagram – Drawing V17491-ICND-010

3. 15 Line List – Document V17491-ICNA-001

3. 16 Terminal Point List – Document V17491-ICNA-002

3. 17 Valve List – Document V17491-ICNA-003

3. 18 Instrument List – Document V17491-ICNA-004

4 Design and Field Hydrotest Pressures

4.1 HP System						
4.1.1 HP Economizer	Design Pressure	1910	psig	131.7	barg	
	Hydrotest Pressure	2865	psig	197.5	barg	*
4.1.2 HP Superheater and Evaporator	Design Pressure	1300	psig	89.6	barg	
	Hydrotest Pressure	1950	psig	134.4	barg	
4.2 LP System						
4.2.1 LP Economizer	Design Pressure	425	psig	29.3	barg	
	Hydrotest Pressure	638	psig	44.0	barg	*
4.2.2 LP Superheater and Evaporator	Design Pressure	180	psig	12.4	barg	
	Hydrotest Pressure	270	psig	18.6	barg	
4.3 HRSG Blowdown Tank	Design Pressure	50	psig	3.4	barg	
	Hydrotest Pressure	75	psig	5.2	barg	**

*Per ASME Section I Code Interpretation I-89-68

**Per ASME Section VIII

5. Boiler Stamping

Section Description		HP Boiler		HP Economizer		LP Boiler		LP Economizer	
Certified by:		Vogt Power Int.		Vogt Power Int.		Vogt Power Int.		Vogt Power Int.	
Serial Number	Unit 51	17491-1A		17491-1B		17491-1C		17491-1D	
	Unit 52	17491-2A		17491-2B		17491-2C		17491-2D	
		psig	barg	psig	barg	psig	barg	psig	barg
MAWP*		1,300	89.6	1,910	131.7	180	12.4	425	29.3
Operating		1,141	78.7	1,225	84.5	120	8.3	174	12.0
Heating Surface		sq ft	sq M	sq ft	sq M	sq ft	sq M	sq ft	sq M
	Superheater	32,298	3,001			4,102	381		-
	Evaporator	103,675	9,632			87,486	8,128		-
	Economizer		-	259,985	24,153		-	55,572	5,163
	Total	135,973	12,632	259,985	24,153	91,588	8,509	55,572	5,163
		lb/hr	kg/hr	MMBtu/hr	kW	lb/hr	kg/hr	MMBtu/hr	kW
Capacity		146,351	66,384	66.46	19,477	28,007	12,704	14.33	4,200
		°F	°C	°F	°C	°F	°C	°F	°C
Steam Temp.		982	528	559	293	476	247	342	172
Year Built		2017		2017		2017		2017	

Section Description		HRSG Deaerator Tank		HRSG Blowdown Tank			
Certified by:		Vogt Power Int.		Vogt Power Int.			
Serial Number	Unit 51	17491-1E		**17491-1F**			
	Unit 52			**17491-2F**			
		psig	barg	psig	barg		
Operating		3	0.2	50	3.4		
MAWP**		100	6.9	-			
		°F	°C	°F	°C		
MDMT		40	4	40	4		
Capacity							
		°F	°C				
Water Temp		221	105				
Year Built		2017		2017			

*Per ASME Section I Code Interpretation I-89-68 **Per ASME Section VIII

6. HP Section

Section Name	HPSH1	HPSH2	HPSH3	HPEV1	HPEV2	HPEV3
Heating Surface, sq. M	784	1108	1108	1376	2064	2064
Effective length of Tubes, M	15.2	15.2	15.2	15.2	15.2	15.2
Number of Tubes/row	29	29	29	36	36	36
Number of passes/module	1	1	1	1	1	1
Number of Rows	2	2	2	2	3	3
Tube O.D., mm	38.1	38.1	38.1	38.1	38.1	38.1
Tube Min Wall, mm	4.1	3.0	2.7	2.7	2.7	2.7
Tube Material	SA-213 T22	SA-213 T22	SA-213 T11	SA-210 A1	SA-210 A1	SA-210 A1
Fin Type (0/1/2, bare/solid/ser.)	1	2	2	2	2	2
Fins per M	268	287	287	287	287	287
Fin Height, mm	9.5	12.7	12.7	12.7	12.7	12.7
Fin Thickness, mm	1.0	1.0	1.0	1.0	1.0	1.0
Fin Material	T409	T409	T409	CS	CS	CS
ModA Outlet Hdr. O.D., mm	219.1	219.1	219.1	219.1	219.1	219.1
ModA Outlet Hdr. Thick., mm	25.4	22.2	18.2	15.1	15.1	15.1
ModA Outlet Hdr. Material	SA-335 P22	SA-335 P22	SA-335 P11	SA-106 C	SA-106 C	SA-106 C
ModA Inlet Hdr. O.D., mm	219.1	219.1	219.1	219.1	219.1	219.1
ModA Inlet Hdr. Thick., mm	25.4	22.2	18.2	15.1	15.1	15.1
ModA Inlet Hdr. Material	SA-335 P22	SA-335 P22	SA-335 P11	SA-106 C	SA-106 C	SA-106 C
ModA Rows	2	2	2	2	3	3
Number of ModA	1	1	1	1	1	1
Module Layout Pattern	2	2	2	2	3	3
Design Pressure, barg	90	90	90	92	92	92
Transverse Pitch, mm	101.6	101.6	101.6	82.6	82.6	82.6
Longitudinal Pitch, mm	114.3	114.3	114.3	114.3	73.0	73.0
Box #	1	1	1	1	1	1
Rows in Current Box	2	2	2	2	3	3

Section Name	HPEV4	HPEV5	HPEC1	HPEC2	HPEC3	HPEC4
Heating Surface, sq. M	2064	2064	1376	2064	2064	1376
Effective length of Tubes, M	15.2	15.2	15.2	15.2	15.2	15.2
Number of Tubes/row	36	36	36	36	36	36
Number of passes/module	1	1	3	5	5	5
Number of Rows	3	3	2	3	3	2
Tube O.D., mm	38.1	38.1	38.1	38.1	38.1	38.1
Tube Min Wall, mm	2.7	2.7	2.7	2.7	2.7	2.7
Tube Material	SA-210 A1	SA-210 A1	SA-210 A1	SA-210 A1	SA-210 A1	SA-210 A1
Fin Type (0/1/2, bare/solid/ser.)	2	2	2	2	2	2
Fins per M	287	287	287	287	287	287
Fin Height, mm	12.7	12.7	12.7	12.7	12.7	12.7
Fin Thickness, mm	1.0	1.0	1.0	1.0	1.0	1.0
Fin Material	CS	CS	CS	CS	CS	CS
ModA Outlet Hdr. O.D., mm	219.1	219.1	219.1	219.1	219.1	219.1
ModA Outlet Hdr. Thick., mm	15.1	15.1	20.6	20.6	20.6	20.6
ModA Outlet Hdr. Material	SA-106 C	SA-106 C	SA-106 C	SA-106 C	SA-106 C	SA-106 C
ModA Inlet Hdr. O.D., mm	219.1	219.1	219.1	219.1	219.1	219.1
ModA Inlet Hdr. Thick., mm	15.1	15.1	20.6	20.6	20.6	20.6
ModA Inlet Hdr. Material	SA-106 C	SA-106 C	SA-106 C	SA-106 C	SA-106 C	SA-106 C
ModA Rows	3	3	2	3	3	2
Number of ModA	1	1	1	1	1	1
Module Layout Pattern	3	3	2	3	3	2
Design Pressure, barg	92	92	99	99	99	99
Transverse Pitch, mm	82.6	82.6	82.6	82.6	82.6	82.6
Longitudinal Pitch, mm	73.0	73.0	114.3	73.0	73.0	114.3
Box #	1	1	1	1	2	2
Rows in Current Box	3	3	2	3	3	2

Fin Segment Width, mm (for all)	4.0
Fin Root Height, mm (for all)	6.4

13551 Triton Park Blvd., Suite 2000
Louisville, Kentucky 40223

6. HP Section (cont.)

Section Name	HPEC5	HPEC6	HPEC7	HPEC8	HPEC9	HPECA
Heating Surface, sq. M	2064	762	2064	2064	2064	2064
Effective length of Tubes, M	15.2	15.2	15.2	15.2	15.2	15.2
Number of Tubes/row	36	36	36	36	36	36
Number of passes/module	5	5	5	5	5	5
Number of Rows	3	2	3	3	3	3
Tube O.D., mm	38.1	38.1	38.1	38.1	38.1	38.1
Tube Min Wall, mm	2.7	2.7	2.7	2.7	2.7	2.7
Tube Material	SA-210 A1	SA-210 A1	SA-210 A1	SA-210 A1	SA-210 A1	SA-210 A1
Fin Type (0/1/2, bare/solid/ser.)	2	1	2	2	2	2
Fins per M	287	201	287	287	287	287
Fin Height, mm	12.7	9.5	12.7	12.7	12.7	12.7
Fin Thickness, mm	1.0	1.0	1.0	1.0	1.0	1.0
Fin Material	CS	CS	CS	CS	CS	CS
ModA Outlet Hdr. O.D., mm	219.1	219.1	219.1	219.1	219.1	219.1
ModA Outlet Hdr. Thick., mm	20.6	20.6	20.6	20.6	20.6	20.6
ModA Outlet Hdr. Material	SA-106 C	SA-106 C	SA-106 C	SA-106 C	SA-106 C	SA-106 C
ModA Inlet Hdr. O.D., mm	219.1	219.1	219.1	219.1	219.1	219.1
ModA Inlet Hdr. Thick., mm	20.6	20.6	20.6	20.6	20.6	20.6
ModA Inlet Hdr. Material	SA-106 C	SA-106 C	SA-106 C	SA-106 C	SA-106 C	SA-106 C
ModA Rows	3	2	3	3	3	3
Number of ModA	1	1	1	1	1	1
Module Layout Pattern	3	3	3	3	3	3
Design Pressure, barg	99	99	99	99	99	99
Transverse Pitch, mm	82.6	82.6	82.6	82.6	82.6	82.6
Longitudinal Pitch, mm	73.0	114.3	73.0	73.0	73.0	73.0
Box #	2	2	2	3	3	3
Rows in Current Box	3	2	3	3	3	3

Section Name	HPECB	HPECC	HPECD			
Heating Surface, sq. M	2064	2064	2064			
Effective length of Tubes, M	15.2	15.2	15.2			
Number of Tubes/row	36	36	36			
Number of passes/module	5	5	5			
Number of Rows	3	3	3			
Tube O.D., mm	38.1	38.1	38.1			
Tube Min Wall, mm	2.7	2.7	2.7			
Tube Material	SA-210 A1	SA-210 A1	SA-210 A1			
Fin Type (0/1/2, bare/solid/ser.)	2	2	2			
Fins per M	287	287	287			
Fin Height, mm	12.7	12.7	12.7			
Fin Thickness, mm	1.0	1.0	1.0			
Fin Material	CS	CS	CS			
ModA Outlet Hdr. O.D., mm	219.1	219.1	219.1			
ModA Outlet Hdr. Thick., mm	20.6	20.6	20.6			
ModA Outlet Hdr. Material	SA-106 C	SA-106 C	SA-106 C			
ModA Inlet Hdr. O.D., mm	219.1	219.1	219.1			
ModA Inlet Hdr. Thick., mm	20.6	20.6	20.6			
ModA Inlet Hdr. Material	SA-106 C	SA-106 C	SA-106 C			
ModA Rows	3	3	3			
Number of ModA	1	1	1			
Module Layout Pattern	3	3	3			
Design Pressure, barg	99	99	99			
Transverse Pitch, mm	82.6	82.6	82.6			
Longitudinal Pitch, mm	73.0	73.0	73.0			
Box #	3	3	3			
Rows in Current Box	3	3	3			

Fin Segment Width, mm (for all)	4.0
Fin Root Height, mm (for all)	6.4

13551 Triton Park Blvd., Suite 2000
Louisville, Kentucky 40223

6. HP Section

Section Name	HPSH1	HPSH2	HPSH3	HPEV1	HPEV2	HPEV3
Heating Surface, sq. ft	8435	11930	11930	14810	22215	22215
Effective length of Tubes, ft	50	50	50	50	50	50
Number of Tubes/row	29	29	29	36	36	36
Number of passes/module	1.00	1.00	1.00	1.00	1.00	1.00
Number of Rows	2	2	2	2	3	3
Tube O.D., in	1.5	1.5	1.5	1.5	1.5	1.5
Tube Min Wall, in	0.160	0.118	0.105	0.105	0.105	0.105
Tube Material	SA-213 T22	SA-213 T22	SA-213 T11	SA-210 A1	SA-210 A1	SA-210 A1
Fin Type (0/1/2, bare/solid/ser.)	1	2	2	2	2	2
Fins per inch	6.8	7.3	7.3	7.3	7.3	7.3
Fin Height, in	0.375	0.5	0.5	0.5	0.5	0.5
Fin Thickness, in	0.04	0.04	0.04	0.04	0.04	0.04
Fin Material	T409	T409	T409	CS	CS	CS
ModA Outlet Hdr. O.D., in	8.625	8.625	8.625	8.625	8.625	8.625
ModA Outlet Hdr. Thick., in	1.000	0.875	0.718	0.593	0.593	0.593
ModA Outlet Hdr. Material	SA-335 P22	SA-335 P22	SA-335 P11	SA-106 C	SA-106 C	SA-106 C
ModA Inlet Hdr. O.D., in	8.625	8.625	8.625	8.625	8.625	8.625
ModA Inlet Hdr. Thick., in	1.000	0.875	0.718	0.593	0.593	0.593
ModA Inlet Hdr. Material	SA-335 P22	SA-335 P22	SA-335 P11	SA-106 C	SA-106 C	SA-106 C
ModA Rows	2	2	2	2	3	3
Number of ModA	1	1	1	1	1	1
Module Layout Pattern	2	2	2	3	3	3
Design Pressure, psig	1300	1300	1300	1340	1340	1340
Transverse Pitch, in	4.0000	4.0000	4.0000	3.2500	3.2500	3.2500
Longitudinal Pitch, in	4.5000	4.5000	4.5000	4.5000	2.8750	2.8750
Box #	1	1	1	1	1	1
Rows in Current Box	2	2	2	2	3	3

Section Name	HPEV4	HPEV5	HPEC1	HPEC2	HPEC3	HPEC4
Heating Surface, sq. ft	22215	22215	14810	22215	22215	14810
Effective length of Tubes, ft	50	50	50	50	50	50
Number of Tubes/row	36	36	36	36	36	36
Number of passes/module	1.00	1.00	3.00	5.00	5.00	5.00
Number of Rows	3	3	2	3	3	2
Tube O.D., in	1.5	1.5	1.5	1.5	1.5	1.5
Tube Min Wall, in	0.105	0.105	0.105	0.105	0.105	0.105
Tube Material	SA-210 A1	SA-210 A1	SA-210 A1	SA-210 A1	SA-210 A1	SA-210 A1
Fin Type (0/1/2, bare/solid/ser.)	2	2	2	2	2	2
Fins per inch	7.3	7.3	7.3	7.3	7.3	7.3
Fin Height, in	0.5	0.5	0.5	0.5	0.5	0.5
Fin Thickness, in	0.04	0.04	0.04	0.04	0.04	0.04
Fin Material	CS	CS	CS	CS	CS	CS
ModA Outlet Hdr. O.D., in	8.625	8.625	8.625	8.625	8.625	8.625
ModA Outlet Hdr. Thick., in	0.593	0.593	0.812	0.812	0.812	0.812
ModA Outlet Hdr. Material	SA-106 C	SA-106 C	SA-106 C	SA-106 C	SA-106 C	SA-106 C
ModA Inlet Hdr. O.D., in	8.625	8.625	8.625	8.625	8.625	8.625
ModA Inlet Hdr. Thick., in	0.593	0.593	0.812	0.812	0.812	0.812
ModA Inlet Hdr. Material	SA-106 C	SA-106 C	SA-106 C	SA-106 C	SA-106 C	SA-106 C
ModA Rows	3	3	2	3	3	2
Number of ModA	1	1	1	1	1	1
Module Layout Pattern	3	3	2	3	3	2
Design Pressure, psig	1340	1340	1435	1435	1435	1435
Transverse Pitch, in	3.2500	3.2500	3.2500	3.2500	3.2500	3.2500
Longitudinal Pitch, in	2.8750	2.8750	4.5000	2.8750	2.8750	4.5000
Box #	1	1	1	1	2	2
Rows in Current Box	3	3	2	3	3	2

Fin Segment Width, in (for all)	0.1575
Fin Root Height, in (for all)	0.2500

General Notes & Data
Doc. No. V17491-SENF-001

13551 Triton Park Blvd., Suite 2000
Louisville, Kentucky 40223

6. HP Section (cont.)

Section Name	HPEC5	HPEC6	HPEC7	HPEC8	HPEC9	HPECA
Heating Surface, sq. ft	22215	8202	22215	22215	22215	22215
Effective length of Tubes, ft	50	50	50	50	50	50
Number of Tubes/row	36	36	36	36	36	36
Number of passes/module	5.00	5.00	5.00	5.00	5.00	5.00
Number of Rows	3	2	3	3	3	3
Tube O.D., in	1.5	1.5	1.5	1.5	1.5	1.5
Tube Min Wall, in	0.105	0.105	0.105	0.105	0.105	0.105
Tube Material	SA-210 A1	SA-210 A1	SA-210 A1	SA-210 A1	SA-210 A1	SA-210 A1
Fin Type (0/1/2, bare/solid/ser.)	2	1	2	2	2	2
Fins per inch	7.3	5.1	7.3	7.3	7.3	7.3
Fin Height, in	0.5	0.375	0.5	0.5	0.5	0.5
Fin Thickness, in	0.04	0.04	0.04	0.04	0.04	0.04
Fin Material	CS	CS	CS	CS	CS	CS
ModA Outlet Hdr. O.D., in	8.625	8.625	8.625	8.625	8.625	8.625
ModA Outlet Hdr. Thick., in	0.812	0.812	0.812	0.812	0.812	0.812
ModA Outlet Hdr. Material	SA-106 C	SA-106 C	SA-106 C	SA-106 C	SA-106 C	SA-106 C
ModA Inlet Hdr. O.D., in	8.625	8.625	8.625	8.625	8.625	8.625
ModA Inlet Hdr. Thick., in	0.812	0.812	0.812	0.812	0.812	0.812
ModA Inlet Hdr. Material	SA-106 C	SA-106 C	SA-106 C	SA-106 C	SA-106 C	SA-106 C
ModA Rows	3	2	3	3	3	3
Number of ModA	1	1	1	1	1	1
Module Layout Pattern	3	2	3	3	3	3
Design Pressure, psig	1435	1435	1435	1435	1435	1435
Transverse Pitch, in	3.2500	3.2500	3.2500	3.2500	3.2500	3.2500
Longitudinal Pitch, in	2.8750	4.5000	2.8750	2.8750	2.8750	2.8750
Box #	2	2	2	3	3	3
Rows in Current Box	3	2	3	3	3	3

Section Name	HPECB	HPECC	HPECD			
Heating Surface, sq. ft	22215	22215	22215			
Effective length of Tubes, ft	50	50	50			
Number of Tubes/row	36	36	36			
Number of passes/module	5.00	5.00	5.00			
Number of Rows	3	3	3			
Tube O.D., in	1.5	1.5	1.5			
Tube Min Wall, in	0.105	0.105	0.105			
Tube Material	SA-210 A1	SA-210 A1	SA-210 A1			
Fin Type (0/1/2, bare/solid/ser.)	2	2	2			
Fins per inch	7.3	7.3	7.3			
Fin Height, in	0.5	0.5	0.5			
Fin Thickness, in	0.04	0.04	0.04			
Fin Material	CS	CS	CS			
ModA Outlet Hdr. O.D., in	8.625	8.625	8.625			
ModA Outlet Hdr. Thick., in	0.812	0.812	0.812			
ModA Outlet Hdr. Material	SA-106 C	SA-106 C	SA-106 C			
ModA Inlet Hdr. O.D., in	8.625	8.625	8.625			
ModA Inlet Hdr. Thick., in	0.812	0.812	0.812			
ModA Inlet Hdr. Material	SA-106 C	SA-106 C	SA-106 C			
ModA Rows	3	3	3			
Number of ModA	1	1	1			
Module Layout Pattern	3	3	3			
Design Pressure, psig	1435	1435	1435			
Transverse Pitch, in	3.2500	3.2500	3.2500			
Longitudinal Pitch, in	2.8750	2.8750	2.8750			
Box #	3	3	3			
Rows in Current Box	3	3	3			

Fin Segment Width, in (for all)	0.1575
Fin Root Height, in (for all)	0.2500

General Notes & Data
Doc. No. V17491-SENF-001

13551 Triton Park Blvd., Suite 2000
Louisville, Kentucky 40223

7. LP Section

Section Name	LPSH1	LPEV1	LPEV2	LPEV3	LPEV4	LPEC1
Heating Surface, sq. ft	4101	20837	22215	22215	22215	11138
Effective length of Tubes, ft	50	50	50	50	50	50
Number of Tubes/row	36	36	36	36	36	36
Number of passes/module	1.00	1.00	1.00	1.00	1.00	6.00
Number of Rows	1	3	3	3	3	2
Tube O.D., in	1.5	1.5	1.5	1.5	1.5	1.5
Tube Min Wall, in	0.105	0.105	0.105	0.105	0.105	0.105
Tube Material	SA-210 A1	SA-210 A1	SA-210 A1	SA-210 A1	SA-210 A1	SA-210 A1
Fin Type (0/1/2, bare/solid/ser.)	1	2	2	2	2	1
Fins per inch	5.1	6.8	7.3	7.3	7.3	7.3
Fin Height, in	0.375	0.5	0.5	0.5	0.5	0.375
Fin Thickness, in	0.04	0.04	0.04	0.04	0.04	0.04
Fin Material	CS	CS	CS	CS	CS	CS
ModA Outlet Hdr. O.D., in	8.625	8.625	8.625	8.625	8.625	8.625
ModA Outlet Hdr. Thick., in	0.406	0.406	0.406	0.406	0.406	0.406
ModA Outlet Hdr. Material	SA-106 B	SA-106 B	SA-106 B	SA-106 B	SA-106 B	SA-106 B
ModA Inlet Hdr. O.D., in	8.625	8.625	8.625	8.625	8.625	8.625
ModA Inlet Hdr. Thick., in	0.406	0.406	0.406	0.406	0.406	0.406
ModA Inlet Hdr. Material	SA-106 B	SA-106 B	SA-106 B	SA-106 B	SA-106 B	SA-106 B
ModA Rows	1	3	3	3	3	2
Number of ModA	1	1	1	1	1	1
Module Layout Pattern	1	3	3	3	3	2
Design Pressure, psig	180	220	220	220	220	425
Transverse Pitch, in	3.2500	3.2500	3.2500	3.2500	3.2500	3.2500
Longitudinal Pitch, in		2.8750	2.8750	2.8750	2.8750	4.5000
Box #	2	2	2	2	2	3
Rows in Current Box	1	3	3	3	3	2

Section Name	LPEC2	LPEC3	LPEC4	LPEC5	LPEC6	LPEC7
Heating Surface, sq. ft	14810	14810	14810	60012	60012	60012
Effective length of Tubes, ft	50	50	50	66	66	66
Number of Tubes/row	36	36	36	88	88	88
Number of passes/module	6.00	6.00	7.00	3.00	3.00	3.00
Number of Rows	2	2	2	3	3	3
Tube O.D., in	1.5	1.5	1.5	1.5	1.5	1.5
Tube Min Wall, in	0.105	0.105	0.105	0.105	0.105	0.105
Tube Material	SA-210 A1	SA-210 A1	SA-210 A1	SA-210 A1	SA-210 A1	SA-210 A1
Fin Type (0/1/2, bare/solid/ser.)	2	2	2	2	2	2
Fins per inch	7.3	7.3	7.3	6.0	6.0	6.0
Fin Height, in	0.5	0.5	0.5	0.500	0.500	0.500
Fin Thickness, in	0.04	0.04	0.04	0.040	0.040	0.040
Fin Material	CS	CS	CS	CS	CS	CS
ModA Outlet Hdr. O.D., in	8.625	8.625	8.625	8.625	8.625	8.625
ModA Outlet Hdr. Thick., in	0.406	0.406	0.406	0.406	0.406	0.406
ModA Outlet Hdr. Material	SA-106 B	SA-106 B	SA-106 B	SA-106 B	SA-106 B	SA-106 B
ModA Inlet Hdr. O.D., in	8.625	8.625	8.625	8.625	8.625	8.625
ModA Inlet Hdr. Thick., in	0.406	0.406	0.406	0.406	0.406	0.406
ModA Inlet Hdr. Material	SA-106 B	SA-106 B	SA-106 B	SA-106 B	SA-106 B	SA-106 B
ModA Rows	2	2	2	3	3	3
Number of ModA	1	1	1	2	2	2
Module Layout Pattern	2	2	3	3	3	3
Design Pressure, psig	425	425	425	510	510	510
Transverse Pitch, in	3.2500	3.2500	3.2500	3.50	3.50	3.50
Longitudinal Pitch, in	4.5000	4.5000	4.5000	2.875	2.875	2.875
Box #	3	3	3	6	6	6
Rows in Current Box	2	2	2	3	3	3

Fin Segment Width, in (for all)	0.1575
Fin Root Height, in (for all)	0.2500

General Notes & Data
Doc. No. V17491-SENF-001

13551 Triton Park Blvd., Suite 2000
Louisville, Kentucky 40223

7. LP Section

Section Name	LPSH1	LPEV1	LPEV2	LPEV3	LPEV4	LPEC1
Heating Surface, sq. M	381	1936	2064	2064	2064	1035
Effective length of Tubes, M	15.2	15.2	15.2	15.2	15.2	15.2
Number of Tubes/row	36	36	36	36	36	36
Number of passes/module	1	1	1	1	1	6
Number of Rows	1	3	3	3	3	2
Tube O.D., mm	38.1	38.1	38.1	38.1	38.1	38.1
Tube Min Wall, mm	2.7	2.7	2.7	2.7	2.7	2.7
Tube Material	SA-210 A1	SA-210 A1	SA-210 A1	SA-210 A1	SA-210 A1	SA-210 A1
Fin Type (0/1/2, bare/solid/ser.)	1	2	2	2	2	1
Fins per M	201	268	287	287	287	287
Fin Height, mm	9.5	12.7	12.7	12.7	12.7	9.5
Fin Thickness, mm	1.0	1.0	1.0	1.0	1.0	1.0
Fin Material	CS	CS	CS	CS	CS	CS
ModA Outlet Hdr. O.D., mm	219.1	219.1	219.1	219.1	219.1	219.1
ModA Outlet Hdr. Thick., mm	10.3	10.3	10.3	10.3	10.3	10.3
ModA Outlet Hdr. Material	SA-106 B	SA-106 B	SA-106 B	SA-106 B	SA-106 B	SA-106 B
ModA Inlet Hdr. O.D., mm	219.1	219.1	219.1	219.1	219.1	219.1
ModA Inlet Hdr. Thick., mm	10.3	10.3	10.3	10.3	10.3	10.3
ModA Inlet Hdr. Material	SA-106 B	SA-106 B	SA-106 B	SA-106 B	SA-106 B	SA-106 B
ModA Rows	1	3	3	3	3	2
Number of ModA	1	1	1	1	1	1
Module Layout Pattern	1	3	3	3	3	2
Design Pressure, barg	12	15	15	15	15	29
Transverse Pitch, mm	82.6	82.6	82.6	82.6	82.6	82.6
Longitudinal Pitch, mm		73.0	73.0	73.0	73.0	114.3
Box #	2	2	2	2	2	3
Rows in Current Box	1	3	3	3	3	2

Section Name	LPEC2	LPEC3	LPEC4	LPEC5	LPEC6	LPEC7
Heating Surface, sq. M	1376	1376	1376	5575	5575	5575
Effective length of Tubes, M	15.2	15.2	15.2	20.1	20.1	20.1
Number of Tubes/row	88	36	36	88	88	88
Number of passes/module	6	6	7	3	3	3
Number of Rows	2	2	2	3	3	3
Tube O.D., mm	38.1	38.1	38.1	38.1	38.1	38.1
Tube Min Wall, mm	2.7	2.7	2.7	2.7	2.7	2.7
Tube Material	SA-210 A1	SA-210 A1	SA-210 A1	SA-210 A1	SA-210 A1	SA-210 A1
Fin Type (0/1/2, bare/solid/ser.)	2	2	2	2	2	2
Fins per M	287	287	287	236	236	236
Fin Height, mm	12.7	12.7	12.7	12.7	12.7	12.7
Fin Thickness, mm	1.0	1.0	1.0	1.0	1.0	1.0
Fin Material	CS	CS	CS	CS	CS	CS
ModA Outlet Hdr. O.D., mm	219.1	219.1	219.1	219.1	219.1	219.1
ModA Outlet Hdr. Thick., mm	10.3	10.3	10.3	10.3	10.3	10.3
ModA Outlet Hdr. Material	SA-106 B	SA-106 B	SA-106 B	SA-106 B	SA-106 B	SA-106 B
ModA Inlet Hdr. O.D., mm	219.1	219.1	219.1	219.1	219.1	219.1
ModA Inlet Hdr. Thick., mm	10.3	10.3	10.3	10.3	10.3	10.3
ModA Inlet Hdr. Material	SA-106 B	SA-106 B	SA-106 B	SA-106 B	SA-106 B	SA-106 B
ModA Rows	2	2	2	3	3	3
Number of ModA	1	1	1	2	2	2
Module Layout Pattern	2	2	2	3	3	3
Design Pressure, barg	29	29	29	35	35	35
Transverse Pitch, mm	82.6	82.6	82.6	88.9	88.9	88.9
Longitudinal Pitch, mm	114.3	114.3	114.3	73.0	73.0	73.0
Box #	3	3	3	6	6	6
Rows in Current Box	2	2	2	3	3	3

Fin Segment Width, mm (for all)	4.0
Fin Root Height, mm (for all)	6.4

General Notes & Data
Doc. No. V17491-SENF-001

13551 Triton Park Blvd., Suite 2000
Louisville, Kentucky 40223

8. Pressure Relief Valves

Section Description	HP Superheater	HP Drum #1	HP Drum #2 Not Required	HP Feedwater
Inlet	2" BW	2 1/2" BW		2" 1500# RF
Outlet	3" 300# RF	6" 300# RF		3" 300# RF
Fluid	Superheated Steam	Saturated Steam		Saturated Steam
	psig barg	psig barg		psig barg
Set Pressure	1235 85.2	1300 89.6		1910 131.7
	lb/hr kg/hr	lb/hr kg/hr		lb/hr kg/hr
Actual Relieving Capacity	55,421 25,138	110,603 50,168		81,306 36,880
Mark No.	51HAH10 AA401 52HAH10 AA401	51HAD10 AA401 52HAD10 AA401		51LAB10 AA401 52LAB10 AA401

Section Description	LP Superheater	LP Drum #1	LP Drum #2	LP Feedwater
Inlet	1.5" 300# RF	1.5" 300# RF	1.5" 300# RF	2" 300# RF
Outlet	2.5" 150# RF	2.5" 150# RF	2.5" 150# RF	3" 150# RF
Fluid	Superheated Steam	Saturated Steam	Saturated Steam	Water
	psig barg	psig barg	psig barg	psig barg
Set Pressure	160 11.0	174 12.0	185 12.8	425 29.3
	lb/hr kg/hr	lb/hr kg/hr	lb/hr kg/hr	lb/hr kg/hr
Actual Relieving Capacity	6,096 2,765	11,272 5,113	11,930 5,411	18,098 8,209
Mark No.	51HAH50 AA401 52HAH50 AA401	51HAD50 AA401 52HAD50 AA401	51HAD50 AA402 52HAD50 AA402	51LAB50 AA401 52LAB50 AA401

Section Description	External Deaerator			
Inlet	6" 600# RF			
Outlet	8" 150# RF			
Fluid	Saturated Steam			
	psig barg			
Set Pressure	100 6.9			
	lb/hr kg/hr			
Actual Relieving Capacity	65,195 29,572			
Mark No.	05LAA10 AA401			

General Notes & Data
Doc. No. V17491-SENF-001

2.0 SYSTEM DESIGN DESCRIPTION

2.1 HRSG FUNCTION

The function of the Heat Recovery Steam Generator (HRSG) system is to extract sensible heat from a gas turbine (GT) exhaust gas stream. The extracted sensible heat is converted into usable steam by the heat transfer surface within the HRSG. The usable steam is generated in three pressure levels for use in a steam turbine - generator set. These three pressure levels will be referred to as the high pressure (HP), intermediate pressure (IP) and low pressure (LP) systems. This HRSG also includes a reheat section, where steam exhausted from the HP section of the steam turbine is mixed with the IP steam, reheated and re-introduced into the IP steam turbine.

All heat transfer surfaces used consist of Vogt Power modular type construction (See Figure 2.1 Steam Generator Circuit). Up to three rows of vertical finned tubes are welded into a pipe header at the top and bottom to form a modular unit.

During normal operation, the steam produced in the HP section will be admitted to the HP casing of the steam turbine. The superheated LP steam is added to the exhaust of the HP steam turbine section where it is admitted to the LP section of the steam turbine.

2.2 NATURAL CIRCULATION

The different sections of transfer surfaces are located in such a manner as to provide for maximum temperature differential between the declining exhaust gas temperature and the increasing temperature of the steam and/or water inside the heat transfer surfaces. A typical example of a steam generator circuit gas side and water side temperature profile is shown on Figure 2.2. See the setting drawings referenced in Tab 1 of this section for the details of the HRSG heat transfer surface arrangement.

Each evaporator circulation loop (See Figure 2.3, Typical HRSG Circulation Loop) consists of a steam drum, downcomers, feeder headers, feeder pipes, modules, and riser pipes. This creates a natural circulation effect with water continuously moving within the boiler tubes to remove and replace the generated steam. In a natural circulation system, circulation increases with increased heat input until a point of maximum fluid flow is reached (See Figure 2.4).

Natural circulation is based on the difference in density between water and steam. Water is supplied from the drum to the bottom of the units through the downcomer assemblies and feeder pipes. As the tubes absorb heat, a steam/water mixture is generated in the module tubes. The steam/water mixture in the tubes is less dense than the water in the downcomers (See Figure 2.5) and rises up to the steam drum.

The downcomers continuously provide cooler, heavier water to the bottom of the heating surface, which becomes less dense and rises as steam bubbles form, and so on. The circulation process continues with a steam/water mixture generated in the tubes rising to the drum and then being replaced with heavier water from the downcomers.

Note that the evaporator tubes are never full of steam, containing either water or a steam/water mix. This cools the metal of the tubes and prevents overheating.

As more heat is added to the boiler tubes, the steam quality (or percentage of steam) of the fluid increases. Since the density difference becomes greater, more "driving head" is available from the natural circulation effect. Up to a point, circulation will naturally increase with increased heat input and cause increased flow to keep the boiler tubes cooled as more steam is generated. Beyond a certain level, friction in the tubes can overcome the difference in density, reducing circulation with additional heat input as shown in Figure 2.4. Natural circulation boilers are designed to operate in the left region of the curve, where there will always be adequate circulation to maintain tube wall temperatures within permissible limits.

Natural circulation also partially compensates for normal imbalances in the heat input to the boiler tubes. As shown in the left portion of Figure 2.4, if one tube receives more heat than adjacent tubes, it will generate more cooling flow. However, if the heat imbalance becomes too great, flow will be reduced due to friction and the tube will overheat.

Steam quality leaving the riser tubes and entering the steam drum is generally 2% to 10% by design, depending on the boiler load and operating pressure. This means that between 2% and 10% of the water from the downcomers will be converted to steam by the time it reaches the top of the module tubes. This low steam quality is necessary to limit the heat flux through the tube wall, which protects the tubes from overheat failures. See Figure 2.6 Metal Temperatures versus Steam Quality.

2.3 HRSG SUBSYSTEMS

The module units are shop assembled into transportable box assemblies with each box containing a number of individual modules and associated components. Each HRSG unit consists of three (3) boxes in series, A spool duct installed between boxes 1 and 2, and boxes 2 and 3 allows for inspection access.

The HRSG is composed of the following subsystems:

1. Setting
2. Low Pressure System
3. High Pressure System
4. Deaerator System
5. Blowdown System
6. Diverter Damper

The Mechanical Design Requirements of the HRSG System can be found in the following contract documents:

Heating Surface Data and Design Conditions	V17491-SENF-0001, "General Notes and Data"
Piping Design Conditions	V17491-ICNA-0001, "Line List"
Valve Design Conditions	V17491-ICNA-0003, "Valve List"
Process Design Conditions	V17491-ICNA-0002, "Terminal Point List"
Instrument Requirements	V17491-ICNA-0004, "Instrument List"

It should be noted that design temperature for individual system components vary as internal water temperatures vary through the heat transfer surfaces or sections, as allowed by ASME Section I Boiler Code. Also, design pressures and temperatures for piping systems vary with the requirements of ASME B31.1 or ASME Section 1, as applicable.

2.4 HRSG SETTING

The Setting provides GT exhaust gas containment ductwork; encasement of the various heat recovery module units; access to equipment via platform, ladder and stair system; duct expansion joints, casing penetration seals, and the exhaust stack. The HRSG setting includes ductwork transitions for connections with the GT Exhaust and the HRSG Module Boxes. See Document V17491-SENF-0001 for insulation details.

2.4.1 DUCTWORK AND CASING (Inlet Duct, Box and Field Casing)

The casing and ductwork sections are fabricated of ASTM A-36 carbon steels (or equivalent), and reinforced on the exterior with carbon steel sections to withstand the specified internal design pressure, wind load, and seismic load. Some 50 ksi steels may be used in the HRSG structure, primarily for the main HRSG columns. Construction is all welded and gas tight to prevent external gas leakage, including both shop and field joints.

All ductwork sections are internally lined with multiple layers of ceramic fiber insulation (8 lb. density) covered with stainless steel or carbon steel liner panels to reduce heat transfer from the GT exhaust gas to the exterior surfaces. This ductwork design is referred to as a "cold casing design". The advantages to the design are that expansion of the ductwork is minimized and the insulation is not exposed to the ambient environment.

Liner panels are attached to the ductwork with 1/2" (12mm) or 3/8" (9mm) diameter studs welded to the inside surfaces of the ductwork. The studs vary in material depending on their operating conditions. Refer to V17491-SENF-0001 for details. The liner panels are designed to provide for differential expansion between the hot interior and the cold external casing.

The expansion joint between the GT exhaust and the inlet duct and the expansion joint between the gas outlet of the LP Economizer (in Box 3) and the stack are provided by Vogt Power. Access doors are provided for entry into various sections of the HRSG including the inlet duct and the stack. The hinged access doors are equipped with grab bars at the top of the doors to assist in entry. Insulation is provided for the inside of the doors where elevated temperatures are encountered. Removable panel doors are also provided in the top and bottom of the boxes for entry into the "attic" and "basement" areas of the module boxes.

2.4.2 OUTLET STACK

The outlet stack is an all welded, free standing, self-supported, uninsulated, A-36 carbon steel structure. The stack is connected to the outlet of Box 3 by the uninsulated outlet duct and an uninsulated expansion joint. The stack is equipped with EPA test ports, CEMS test ports and aircraft warning lights. All of these items are accessible by the ladder and platform system supplied.

2.4.3 PLATFORMS, LADDERS AND STAIRS

Platforms, stairways and/or ladders are provided for where required for access to the HRSG and its subsystems. These platforms and stairways provide access to the upper levels of the HRSG, the safety valves, the stack ports, and all other valves and instrumentation. Platform grating and stair treads are open bar type grating with pipe handrails.

2.4.4 CASING EXPANSION JOINTS

The HRSG outlet expansion joint is a "hot-to-hot" flange design which means it attaches to two uninsulated pieces of equipment. The gas seal is performed by a

multi-layer fabric belt, which is clamped to the frame by a series of bolts and backing bars which provide the sealing pressure to the edge of fabric around the entire periphery of the belt.

The inlet duct expansion joint is a "cold-to-cold" insulated joint. The gas seal is created by multi-layer fabric belts clamped to the frame by a series of bolts and backing bars which provide the sealing pressure to the edge of fabric around the entire periphery of the belt. The joint is internally insulated with an internal stainless steel liner integral to the internal lining of the inlet duct.

2.4.5 CASING PENETRATIONS

Piping and hanger rods which penetrate the casing are sealed by a bellows type metallic expansion joint. Each bellows has been specifically designed / selected for the predicted thermal differential movements between the pipe or hanger and the casing.

2.6 LOW PRESSURE SYSTEM

The LP section includes an economizer (LPEC), evaporator (LPEV) and superheater (LPSH). The LP system flow path is from the economizer to the steam drum/evaporator and finally the superheater. The location of these heat transfer surfaces may be found on the Right Side Section drawing V17491-SEND-001.

The LP system is equipped with four safety relief valves, one mounted on top of the economizer inlet piping, two mounted on top of the drum, and one mounted vertically on the LP main steam outlet. In an over-pressure situation, the LP superheater SRV will lift first. As the pressure continues to build, the LP drum SRVs will lift in series (lowest set pressure first). These three SRVs are designed to relieve 100% of the total LP steam generating capacity as required by ASME Section I for personnel and equipment protection. The steam safety valves exhaust into steam silencers to minimize the noise released during this event. The safety valve on the economizer inlet will lift in the event of an over-pressure situation, either due to heat migration during shut down or due to high pump pressure.

2.6.1 LOW PRESSURE ECONOMIZER (LPEC)

The LP economizer consists of four rows of tubes divided between two modules. Each module has multiple passes on the water side. This is accomplished by internal baffles in the upper and lower headers. The LP

economizer modules are all top supported with module crossovers located in the top and bottom casing cavities ("attic" and "basement"). The location of these heat transfer surfaces may be found on the Right Side Section drawing V17491-SEND-001.

The LP economizer receives feedwater from the condensate pump and discharges to the LP drum.

The LP economizer section contains vents and drains as required by the ASME Code and good practice. The LP economizer vents are used primarily for maintenance (hydro testing and filling) to vent trapped air from the upper headers. They discharge to the LP drum. The LP economizer drains are used for maintenance (flushing the economizer section free of construction sediment during boiler cleaning and system draining for maintenance or freeze protection if out of service).

The LP economizer is equipped with a pressure safety valve (PSV) mounted vertically on top of the inlet piping as required by ASME Section I. The PSV is designed to relieve 100% of the total LP economizer generating capacity as required by Section I of the ASME Code for protection of personnel and equipment.

2.6.2 LOW PRESSURE STEAM DRUM and EVAPORATOR (LPEV)

The LP evaporator section consists of twelve rows of tubes, divided between four modules. The modules are all single pass with no internal baffles in the headers, fed in parallel. The location of these heat transfer surfaces may be found on the Right Side Section drawing V17491-SEND-0001.

The LP steam drum receives feedwater from the water preheater and mixes it with the drum water. The drum water is fed to the bottom of the LP evaporator modules. In the LP evaporator section, the water phase change between liquid and steam occurs as described above in paragraph 2.2. The steam water mixture is discharged through the riser pipes into the LP drum beneath the water level, and is directed by internal baffles above normal water level (NWL) for steam/water mixture separation(See Figure 2.7 for typical drum internal layout). The separated steam from the steam/water mixture travels upward through final stage separators ("scrubbers") to steam supply lines that feed the LP superheater.

The downcomer inlets are equipped with vortex breakers which disrupt the swirling motion of the water flow from the drum and into the downcomer. These are required to prevent a vortex from forming and drawing steam bubbles and/or surface impurities into the downcomers. The downcomers are also covered with a mesh screen to prevent the loss of materials during inspection and maintenance.

The lower downcomer crossover header located at the bottom of the system contains the intermittent blowdown (IBD) connections. In addition, inspection access is provided to these headers with flanged hand holes.

The intermittent blowdown (IBD) is designed to remove any sludge or contaminates formed in the LP evaporator water and to maintain boiler water chemistry within limits as shown in Section I, Tab 8. Section I, Tab 9 provides additional steam purity requirements for the steam generators.

During normal operation, feedwater is constantly added to the drum as steam is removed. The impurities in the feedwater will concentrate and remain in the drum water. If not removed, the drum water solids concentration will increase, which will eventually cause the formation of scale. The formation of scale on tube surfaces reduces the heat transfer and can lead to overheating and possible tube failures. A continuous blow down line is provided to maintain boiler water solids at recommended limits. The continuous blow down is designed for continuous operation, removing a small portion of drum water to keep the system in balance. The continuous blowdown is routed to the blowdown tank.

The steam drum internals also include a chemical feed line for water treatment. Internal boiler water treatment is achieved by injecting chemicals (consult a water treatment expert) through the chemical feed line into the steam drum. The chemical feed line discharges into a turbulent zone of the drum for thorough mixing with the boiler water before the water enters the downcomers. The continuous blow down and chemical feed lines are separated so that injection chemicals do not flow directly to the blow down line.

The drum water level must be within design limits during operation, and must be properly indicated to the operator. For this reason, the LP steam drum includes one water level gauge, three level transmitters, and a probe-type level indicator with independent indication in the control room. These items are strategically positioned on the drum heads to assure accurate measurement of the water level in the steam drum.

NOTE: See Section 2.8 for further details on Level Equipment.

A pressure indicator is supplied on the lLP steam drum as required by the ASME Code. Each drum head includes a 14"x18" elliptical manway at each end. The drum shell contains the connections for the pressure safety relief valves, vents, pressure indicators, level transmitters, level gauges, nitrogen blanketing, downcomer and riser connections.

2.6.2 LOW PRESSURE SUPERHEATER (LPSH)

The LPSH consists of one row of tubes in a single module. The LPSH has one pass on the steam side, with no baffles in the headers. The location of these heat transfer surfaces may be found on the Right Side Section drawing V17491-SEND-0001.

The LP superheater receives steam from the LP steam drum heats it from saturation to the design superheat temperature. Steam leaving the LPSH is injected into the low pressure section of the steam turbine.

The LPSH modules are designed as drainable superheaters. The LP superheater drains are used for the removal of condensate formed during the purge portion of HOT or WARM start ups, and for draining of hydro water and draining/flushing during chemical cleaning.

2.7 HIGH PRESSURE SYSTEM

The HP System is composed of an economizer (HPEC), evaporator (HPEV), and superheater (HPSH). The HP system flow path is from the economizer to the steam drum/evaporator and finally to the superheater. The location of these heat transfer surfaces may be found on the Right Side Section drawing V17491-SEND-0001.

The HP system is equipped with 2 safety relief valves, one mounted on top of the drum, and one mounted vertically on the HP main steam outlet. In an over-pressure situation, the HP superheater SRV will lift first. As the pressure continues to build, the HP drum SRV will lift. The two SRV's are designed to relieve 100% of the total HP steam generating capacity. The steam safety valves exhaust into steam silencers to minimize the noise released during this event.

2.7.1 HIGH PRESSURE ECONOMIZER (HPEC)

The HP economizer consists of thirty-three rows of tubes divided between thirteen modules. Each module is multi-pass on the water side and single pass on the gas side. This is accomplished by internal baffles in the upper and lower module

headers. The location of these heat transfer surfaces may be found on the Right Side Section drawing V17491-SEND-0001.

The HP economizer receives feedwater from the boiler feed pumps and discharges to the HP steam drum. The HP economizer feedwater inlet line includes a check valve and a stop valve in accordance with the ASME code.

The HP economizer section is fully vented and drainable. The HP economizer drains are used primarily for maintenance and for flushing the economizer section free of sediment during filling of boiler. The HP economizer vents are used primarily to vent trapped air or flashing steam from the upper headers into the high pressure drum.

Due to sliding pressure operation and partial load operating conditions, a motorized HP economizer vent valve has been located in the HP economizer outlet module (HPEC1). This valve will allow the release of any trapped steam that may form within this module at partial load or off-design operating conditions (low pressure operation) and thus avert any problems due to steaming in the economizer.

2.7.2 HIGH PRESSURE STEAM DRUM and EVAPORATOR (HPEV)

The HP evaporator section consists of fourteen rows of tubes, divided between five modules. The modules are all single pass fed in parallel with no internal baffles in the headers. The location of these heat transfer surfaces may be found on the Right Side Section drawing V17491-SEND-0001.

The HP steam drum receives the HP economizer outlet feedwater and mixes it with the drum water. The drum water is fed to the bottom of the HP evaporator modules. The steam water mixture is discharged through the riser tubes into the HP drum below the water level, and is directed by internal baffles above normal water level (NWL) for steam/water mixture separation. The separated steam from the steam/water mixture travels upward through final stage separators ("scrubbers") to steam supply lines that feed the HP superheater. (See Figure 2.7 for typical drum internal layout.)

Saturated steam sampling nozzles are located in selected superheater feeder stub tube in the drum to provide a means of withdrawing a representative portion of saturated steam for subsequent analysis. See Figure 2.8.

The downcomer inlets are equipped with vortex breakers which disrupt the swirling motion of the water flow from the drum and into the downcomer. These are required to prevent a vortex from forming and drawing steam bubbles and/or surface

impurities into the downcomer. The downcomers are also covered with a mesh screen to prevent the loss of materials during inspection and maintenance.

The lower feeder headers located at the bottom of the system contain intermittent blow down (IBD) connections. In addition, inspection access is provided to these headers with flanged hand holes.

The High pressure evaporator intermittent blowdown (IBD) is designed to remove any sludge or contaminates formed in the HP evaporator water and to maintain boiler water chemistry within limits as shown in Section I, Tab 8 of this manual. In addition, Section I, Tab 9 provides additional steam purity requirements for the steam generators.

During normal operation, feedwater is constantly added to the drum as steam is removed. The impurities in the feedwater will concentrate and remain in the drum water. If not removed, the drum water solids concentration will increase, which will eventually cause the formation of scale. The formation of scale on tube surfaces reduces heat transfer and can lead to overheating and possible tube failures. A continuous blow down line is provided to maintain boiler water solids at recommended limits. The continuous blow down is designed for continuous operation, removing a small portion of drum water to keep the system in balance. The continuous blowdown is routed to the blowdown tank.

The steam drum internals also include a chemical feed line for water treatment. Internal boiler water treatment is achieved by injecting chemicals (consult a water treatment expert) through the chemical feed line into the steam drum. The chemical feed line discharges into a turbulent zone of the drum for thorough mixing with the boiler water before the water enters the downcomers. The continuous blow down and chemical feed lines are separated so that injection chemicals do not flow directly to the blow down line.

The water level in drum boilers must be within design limits during operation, and must be properly indicated to the operator. For this reason, the HP steam drum includes one water level gauge, three level transmitters, and one probe-type level indicator with independent indication in the control room. These items are strategically positioned on the drum heads to assure accurate measurement of the water level in the steam drum.

NOTE: See Section 2.8 for further details on Level Equipment.

A pressure indicator is supplied on the HP steam drum as required by the ASME Code. Each drum head includes a 14"x18" elliptical manway at each end. The

steam drum includes the connections for the pressure safety relief valves, vents, pressure indicators, level transmitters, level gauges, nitrogen blanketing, downcomers, riser connections, continuous blow down, and chemical feed.

2.7.3 HIGH PRESSURE SUPERHEATER (HPSH)

The HP superheater consists of six rows of tubes, divided between four modules. Steam is received from the high pressure steam drum at saturated temperature and is heated to final design steam temperature. The location of these heat transfer surfaces may be found on the Right Side Section drawing V17491-SEND-0001.

The HP Superheater is equipped with an interstage desuperheater, consisting of a spray nozzle assembly with an integral control valve located in the piping between HPSH1 and HPSH2. The desuperheater is supplied for final steam temperature control. The spray desuperheating process uses water extracted from the HP feed pump discharge line as the cooling media. Final steam temperature control is important for protection of the superheater and equipment downstream of the HRSG (the steam turbine). The desuperheater is designed to limit final steam temperature at the HP superheater outlet to final design steam temperature. It is located to protect the steam turbine from accidental water carry-over.

Temperature sensing elements are located in the HP superheater outlet and are included in the HP superheater desuperheater piping loop. These thermocouples provide indication to control outlet steam temperature and to avoid over cooling the steam to saturation temperature, which will create condensation and introduce liquid water into the superheater.

The HP superheater modules are designed as drainable superheaters. This enables the superheater modules to be completely drained prior to and during start-up. The HP superheater drains are automatic drains used for the removal of condensate formed during the purge portion of HOT or WARM start ups, draining of hydro water and draining/flushing during chemical cleaning. They are also designed for periodic short-term use during HRSG operation. They are routed to the blowdown tank.

The HP superheater modules and outlet header are equipped with vent valves as needed to vent non-condensable gasses at start-up and to release any air pockets during boiler commissioning.

2.8 CONTROL PHILOSOPHY and INSTRUMENTATION

The following paragraphs give a very general overview of the HRSG operating philosophy for certain special loops within the HRSG, including a brief description of the instruments installed. This is intended to give the operator a general understanding of the purpose behind the detailed logic, not to dictate the logic.

For detailed information on HRSG control, reference the HRSG Control Philosophy and the HRSG logics, V17491-ICNF-0030, V17491-DENE-0001, and V17491-ICND-199 through -382.

The final control logics implemented by the DCS shall be provided by others.

The control philosophy permits the HRSG to follow the GT load and lead the operation of the steam turbine. This is achieved by carefully considering drum level control, the type of fuel being used, and final steam temperature control. Specifically, steam flow in the evaporators varies depending upon energy available in the GT exhaust gas stream. The operator must always bear in mind that the GT load dictates the power output of the steam cycle.

2.8.1 DRUM LEVEL CONTROL DURING PRESSURE / LOAD CHANGES

"Shrink" and "swell" are two terms associated with the effect of changing steam and water specific volume on drum level. Shrink is the decrease in drum water volume that occurs when boiling is suddenly impeded or stopped. Swell is the increase in drum level due to increased boiling resulting from a sudden increase in heat absorption.

Both phenomena occur because the evaporator water contains steam bubbles, which increase both the water volume and the drum level as they form. During steady-state operation, the percentage of steam in the water is stable, resulting in a stable drum level. When boiling stops or suddenly decreases, the volume of steam decreases and the drum level drops – the drum level “shrinks”. When boiling starts or suddenly increases, the volume of steam rises and the drum level “swells”.

Sudden increases in drum pressure will deter boiling and cause shrink, resulting in the drum level dropping suddenly. Sudden decreases in pressure will encourage boiling and cause swell, resulting in a sudden rise in drum pressure. Uncontrolled, either condition can result in an automatic GT load reduction or trip due to drum level.

In addition to changes in load, swell is also a boiler start-up characteristic, as the water level will rise when boiling starts. Because of this the HRSG should be started with a lower drum level than normal, allowing the drum water to reach normal water level (NWL) after the increase in drum water level due to swell. If NWL is exceeded during start up, the intermittent blowdown drain can be used to lower the level, or the GT loading ramp rate can be decreased to manage the water level swell of the drum. Note that suggested levels for start up are listed in the settings drawings (V17491-SEND-002) and in the HRSG control philosophy (V17491-ICNF-001).

2.8.2 DRUM LEVEL CONTROL

Three element feedwater control loops shall be incorporated in the drum water level control strategies for the HP and LP systems. The three element feedwater control strategy provides a continuous drum water mass balance, calculating every pound of steam or water removed from the evaporator and replacing it with a pound of water from the feedwater system, to maintain a continuous level in the steam drum. The drum level indicated by the level transmitters is then used to trim the signal, opening the control valve if the level drops, closing it if it rises. This is necessary for unmeasured mass losses from the drum, such as continuous blowdown.

Drum level control is critical to boiler operation. Failing to maintain the drum level within normal operating range can lead to improper water separation, resulting in deposits in the superheater tubes which will cause tube overheating and eventual failure. In extreme cases, the evaporator tubes will receive inadequate cooling if the water level drops into the tubes, causing tube overheating and rapid failure. Allowing the water level to drop too far can starve the tubes of cooling water, causing rapid failure.

2.8.3 DESUPERHEATER SPRAY WATER FLOW

The HP superheater has sufficient heating surface to produce the required final steam temperature at the design condition for natural gas firing in the GT. However, the GT exhaust conditions will vary with ambient conditions and load. At these off design conditions, the heating surface may produce a higher than needed final steam temperature.

An interstage desuperheater is used to reduce the final steam temperature. The desuperheater lowers final steam temperature by lowering the steam temperature at a middle stage of the superheater surface (“interstage”). This is accomplished by injecting cold feedwater, causing a slight increase in steam flow and a significant drop in steam temperature. The desuperheater loop piping is protected from thermal

shock in the area of the nozzle by a thermal sleeve or liner. Thermal shock may occur when relatively cold drops of spray water impinge on the pipe wall.

A feed forward control loop is suggested for desuperheater control. Primary control is achieved by measuring the final steam temperature and comparing it to the set point. The feed forward portion is accomplished by measuring the desuperheater outlet temperature and the steam turbine load changes and calculating expected spray flow. The feed forward portion will need to be trimmed in the field since load ramps vary by gas turbine. The purpose of these feed forward components is to assure that the desuperheater system has adequate time to react to a change in operating conditions.

To assure that wet steam is not admitted to the heating surface, the desuperheater outlet shall limit the interstage steam temperature to within no less than 50°F (28°C) of the saturation temperature at anytime.

2.8.4 CONTINUOUS BLOWDOWN (CBD)

The HP and LP drums have continuous blow down lines. The blow down flow rate is controlled by a pneumatic control valve and a motor operated isolation valves. The isolation valves should be used by the operators to isolate the system during shutdown. During normal operations the control valve receives a signal form the DCS to regulate a small quantity of flow out of the drum based on the drum TDS or conductivity. The drum TDS and conductivity are measured by the sampling system which analyzes samples taken from the steam drum.

NOTE: Drum water purity directly affects the final steam purity of saturated steam leaving the steam drum.

2.8.5 INTERMITTENT BLOWDOWN (IBD)

The intermittent blowoff line, referred to as intermittent blow down or IBD, is required by the ASME code to blow off any solids that may collect in the lowest point of the evaporator (boiler) sections. It is also designed to remove excess water either at start-up (for swell control) or to correct severe problems with drum chemistry (high impurities or excessive chemical injection). The IBD is a motor operated slow opening valve, which can be operated at any time as deemed necessary for chemistry control or level control.

Intermittent blowdown is not normally needed after the unit is stabilized at a NWL provided the continuous blowdown system can maintain drum water solids level.

Increases in solids concentration may be attributed to upsets in water treatment or changes in water chemistry.

2.8.6 INSTRUMENTS

The HRSG has various instruments required by the Code, plus many others to aid in reliable and safe operation. Please refer to the Vogt Power P&ID's (V17491-ICND-001 through -006), instrument arrangements (V17491-ICND-030 and -031), and suggested instrument installation drawings (V17491-ICND-116 through -138) for complete information regarding the location and arrangement of instrumentation

2.8.6.1 PRESSURE INDICATOR (Pressure Gauge)

Pressure indicators are required by the ASME Code to provide a local indication of drum pressure. These pressure indicators should not be removed from the HRSG. Other pressure indicators have been included as required by contract.

2. 8.6.2 PRESSURE TRANSMITTER

Pressure transmitters have been placed at various locations to collect operating pressures for the control system in the control room. They are used to measure system pressures at various locations as required by contract.

2. 8.6.3 TEMPERATURE INDICATOR (Temperature Gauge)

Temperature indicators have been included on the superheater outlet lines as required by the ASME code, and at other locations according to contract.

2. 8.6.4 THERMOCOUPLES

Thermocouples have been incorporated into the HRSG for control purposes and for remote monitoring of system temperatures.

2.8.7 DRUM WATER LEVEL INDICATORS

Drum water level indication is required by the ASME Code. These Indicators are located on each head of each steam drum. Two different types of level indication are used. Direct line of sight indicators or gauge glasses and level transmitters.

Bear in mind that an offset occurs between the indication and actual water level in the steam drum. This offset is a result of sub-cooling that occurs in the water column. The greatest offset will be on the high pressure system. The offset is

minimal at low water levels, and indication is therefore most accurate at low level cut off. Transmitter signals can be "density compensated" in order to account for this offset and provide an accurate reading. Probe columns and level gages cannot be compensated.

2.8.7.1 GAUGE GLASS

The ASME Code requires at least one gage glass is required on each steam drum. The gauge glass, when correctly installed and maintained per the ASME Code and manufacturer's recommendation, indicates the steam drum water level at the drum operating platform. Gauge glass observations must be unobstructed per ASME Code.

The gauge glass should be kept clean and in operational condition at all times. The glass used in boiler gauge glass should be mica protected to prevent corrosion of the glass with the drum water chemicals. Boiler gauge glass should be replaced following boiler cleaning procedures.

Follow manufacturer's instructions when blowing down the gauge glasses (See Section IV). Depending on boiler water conditions and the type of gauge glass, some glasses require frequent blowing down to keep the gauge clean and the connecting piping free of sludge. It is recommended that gauge glasses in operation be blown down once per shift.

WARNING: NO BOILER SHOULD BE IN OPERATION WITHOUT AT LEAST TWO INDEPENDENT, DEPENDABLE MEANS OF WATER LEVEL DETECTION IN SERVICE.

CAUTION: Per ASME Section 1 Code, Para. PG-60.1.1, "Two independent remote level indicators may be provided instead of one of the two required gage glass for boiler drum water level indication in the case of power boilers with all drum safety valves set at or above 900 psi. When both remote level indicators are in reliable operation, the remaining gage glass may be shut off, but shall be maintained in serviceable condition." Due to the high corrosion rate of mica at elevated pressures and for the safety of plant personal, we recommend that the plant follow these guidelines for operation of the HP drum level gauges. Gauges on the LP system must remain in service at all times.

2.8.7.2 LEVEL TRANSMITTERS

Three (3) drum water level transmitters have been installed on each drum to monitor drum operating water level. The levels are transmitted to and indicated by the DCS. The DCS displays these signals in the control room. The signal levels are monitored and alarms are generated to alert the operator of levels outside the range required for safe operation of the HRSG and feed pumps.

WARNING: DRUM LEVEL MUST BE CONTROLLED NEAR NORMAL WATER LEVEL AT ALL TIMES.

High drum level will increase carryover to downstream equipment. Carryover can result in superheater tube contamination due to slight amounts of chemicals and impurities in the boiler water. Low drum level can cause circulation problems by restricting flow to the downcomers which, in turn, supply the evaporator circuits. This ultimately results in evaporator tube overheating and failure.

2.8.7.3 INDEPENDENT SELF-COMPENSATING LEVEL INDICATORS

One probe-type drum water level transmitter has been supplied for each drum to monitor drum operating water level. The levels are transmitted to and indicated by an independent display. This display should have a separate power source than the DCS. The signal levels are monitored and color is used to indicate if the level is within the required range required for safe operation of the HRSG and feed pumps. This reading is not density-compensated and will be inaccurate when the HRSG is not operating at or near its design pressure.

WARNING: DRUM LEVEL MUST BE CONTROLLED NEAR NORMAL WATER LEVEL AT ALL TIMES.

2.9 DIVERTER DAMPER WITH BYPASS STACK

The HRSG is equipped with a diverter damper and bypass stack. The purpose of the diverter damper is to divert the GT exhaust gas flow away from the HRSG and into a bypass stack for discharge to atmosphere. This allows the GT to continue to operate after an HRSG trip, by performing an emergency close of the damper. It also increases the cycling range of the plant, and allows the HRSG to be repaired while still maintaining the generating capacity of the GT. Note that the HRSG must be blanked off with a separate blanking plate in order to enter while the GT is operating. Relying on the damper blade to provide protection for persons inside the HRSG is dangerous, as this blade can be easily moved by DCS or local command, and the gas seal is provided by a pneumatic system which can fail or be shut down.

The diverter damper is supplied with a bypass stack, supported on an independent steel frame. The bypass stack is internally insulated, due to the high temperatures of the diverted gas. The bypass stack is supplied with the same CEMS ports, thermocouples, and EPA test ports as the exhaust stack.

For more information on the diverter damper, see the vendor manuals in Section IV of this manual.

2.10 FIGURES

The Figures included in the following pages are not intended to replace the drawings for the HRSGs. These Figures have been included to clarify the text of the preceding paragraphs only.

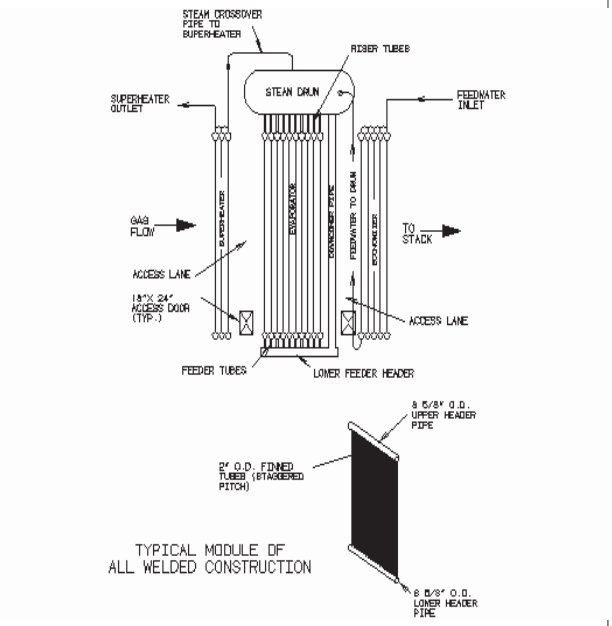

FIGURE 2.1 Steam Generator Circuit

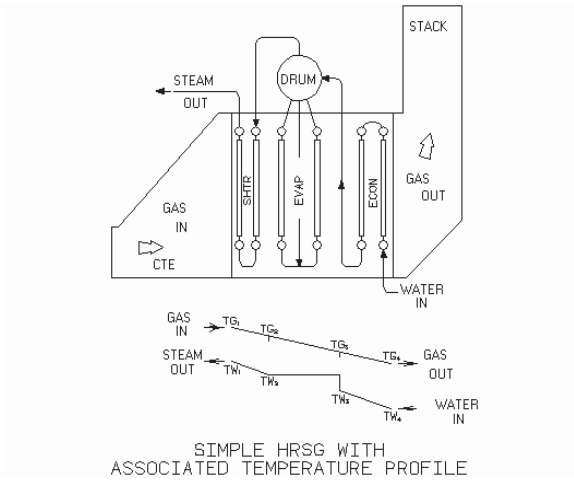

Figure 2.2 Typical HRSG Temperature Profile

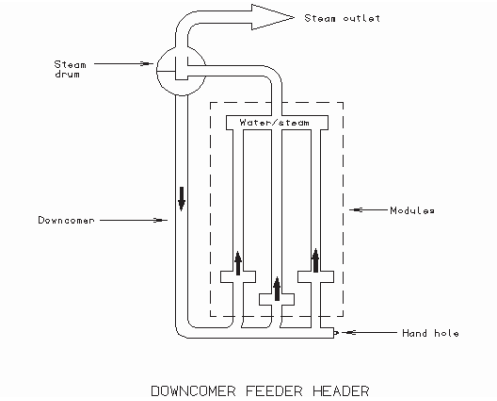

Figure 2.3 Typical HRSG Circulation Loop

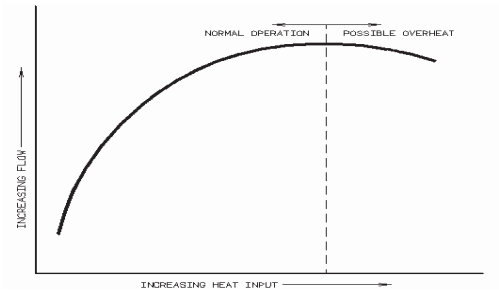

Figure 2.4 Increasing Flow versus Heat Input

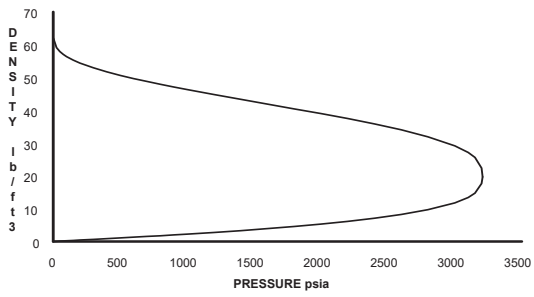

FIGURE 2.5 Steam/Water Mixture Density vs. Pressure Curve

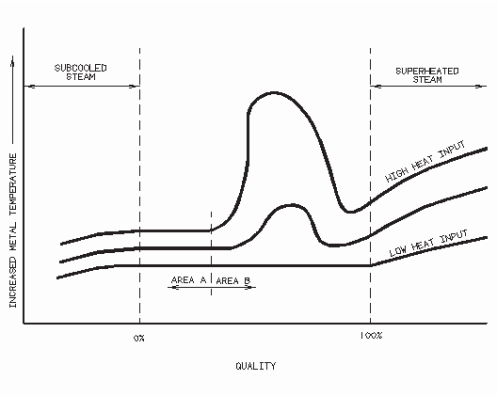

Figure 2.6 Heat Input versus Steam Quality

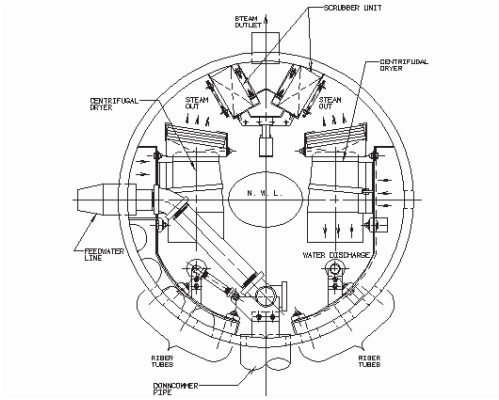

Figure 2.7 Typical Steam Drum Internals

2.11 REFERENCE

The following references were used to develop this system design description:

1. HRSG Piping and Instrument Diagrams V17491-ICND-001 through -006
2. HRSG Setting Drawings V17491-SEND-001 through -003

The following standards have been used in the design of the HRSG system:

1. American Society of Mechanical Engineers (ASME) Boiler Codes, Section I, 2010 Edition
2. ABMA - American Boiler Manufacturer's Association
3. AISC- American Institute of Steel Construction
4. ANSI - American National Standards Institute
5. ASTM - American Society for Testing and Materials
6. AWS - American Welding Society
7. CFR - Code of Federal Regulations (Part 60)
8. IEEE - Institute of Electrical and Electronic Engineers
9. MSS - Manufacturer's Standardization Society
10. NESC - National Electrical Safety Code
11. NICA - National Insulation Association
12. NEMA - National Electrical Manufacturer's Association
13. SSPC - Steel Structure Painting Council
14. OSHA - Federal Occupational Safety and Health Administration Standards, 29CFR and 1910 and 29CFR 1926

2.17 Abbreviations

The following abbreviations were used in the preceding:

CBD	-	Continuous Blowdown
GT	-	Gas Turbine
HRSG	-	Heat Recovery Steam Generator
HP	-	High Pressure
HPSH	-	High Pressure Superheater
HPEV	-	High Pressure Evaporator
HPEC	-	High Pressure Economizer
IBD	-	Intermittent Blowdown
LP	-	Low Pressure
LPSH	-	Low Pressure Superheater
LPEV	-	Low Pressure Evaporator
LPEC	-	LP Economizer (also known Feedwater Heater)

3.0. SAFETY VALVE DATA

3.1. DESIGN AND FIELD HYDROTEST PRESSURES

The design and field hydrotest pressures for each HRSG system are listed below. Code stamping information can be found in Vogt Power Document No. V17491-SENF-001 titled "General Notes and Data". The Hydrotest Procedure can be found in Section III, Tab 2 of this Manual.

Heat Transfer Section	Design Pressure (psig)	Hydrotest Pressure (psig)	Design Pressure (barg)	Hydrotest Pressure (barg)
HP Superheater and Evaporator	1300	1950	89.6	134.4
HP Economizer*	1910	2865*	131.7	197.5 *
LP Superheater and Evaporator	**180**	**270**	**12.4**	**18.6**
LP Economizer	425	638	29.3	44.0
Blowdown Tank*	50	75	3.4	5.2
Deaerator*	100	130	6.9	9.0

*-Hydrotest pressure per ASME Section I Code Interpretation I-89-68
**-Hydrotest pressure per ASME Section VIII Interpretation VIII-86-126 and UG-125

3.2 SAFETY VALVES - Factory Setting Versus Field Setting of Safety Valves

Every safety valve is set and adjusted on steam before shipment from the factory. Blowdown adjustments are made as carefully and accurately as possible on the factory test boiler. However, actual field operating conditions may vary considerably from factory test conditions.

Conditions beyond the manufacturer's control that effect safety valve operation are:

1. Quantity of steam being discharged through the valves. The actual installation capacity may exceed that of the test boiler.
2. Quality of steam being discharged.
3. Discharge piping stresses and back pressure.
4. Ambient temperature.
5. Shipping or storage damage.
6. Improper gagging.
7. Improper bolting of flanges.
8. Damage due to foreign material in the steam.

The removal of hydro plugs and final safety valve adjustment on the HRSG installation must be performed by the safety valve manufacturer's representative, or other safety valve assembly company recommended by the safety valve manufacturer, certified by ASME to use "V" stamp. This will insure that the valves perform in compliance with the ASME Boiler Code and/or other applicable code requirements.

Vogt Power's service representatives are not certified to set and test safety valves. The customer should procure safety valve service personnel direct from the manufacturer or safety valve assembly company. Note that many manufacturers will not warrant a valve set by anyone other than their own representatives.

3.3 SAFETY VALVE SETTINGS

Valve Location	Valve Setting (psig)	Valve Setting (barg)
HP Superheater Outlet	1235	85.2
HP Drum #1	1300	89.6
LP Superheater Outlet	160	11.0
LP Drum #1	174	12.0
LP Drum #2	185	12.8
LP Economizer Inlet	425	29.3
Deaerator	100	6.9

For additional information on safety valve design, see document V17491-SENF-001 and the vendor information in Section IV of this manual.

4.0. PERFORMANCE DATA

See Vogt Power Document V17491-ICNA-010 titled "HRSG Performance Data for PFD", and V17491-ICND-010 title "Process Flow Diagram", attached, for the expected performance data for the Amata B. Grimm (Rayong) HRSGs.

ENGINEERING DOCUMENT

Vogt Power International, Inc. • 13551 Triton Park Blvd Suite 2000 • Louisville, Kentucky 40241

HRSG PERFORMANCE DATA for PROCESS FLOW DIAGRAM

For

Toshiba Plant Systems & Services

For

ABPR3,4,5 Combined Cycle Cogeneration Plant Project

Vogt Power Job No. V17489, V17490, and V17491

Vogt Power Document No. V17489-ICNA-010, V17490-ICNA-010, and V14491-ICNA-010

Prepared By: Thomas "Andy" Craven

Reviewed By: David Schnell

Rev.	Date	Engineer	Comments
00	12/15/2015	AR	Initial Release
01	4/7/2016	NW	Moved HP Level Control Valve, added FGH Preheater, revised cases
02	9/2/2016	NW	FGH Preheater process condition update
03	2/7/2017	TAC	Consolidation of V17489, V17490 and V17491 Perfomance Data

ENGINEERING DOCUMENT

Vogt Power International, Inc. · 13551 Triton Park Blvd Suite 2000 · Louisville, Kentucky 40241

Notes:

1. This document is designed to be used with reference to VPI drawing no. V17489,90,91-ICND-010, "Process Flow Diagram". Trunk Line (TL) numbers shown in the attached tables reference this drawing.

2. For additional information regarding the system design, please reference the HRSG P&IDs:

ABPR3,4,5-M-S-PD-0135	V17489,90,91-ICND-001	P&ID Legend & General Notes
ABPR3,4,5-M-S-PD-0136	V17489,90,91-ICND-002	Flue Gas P&ID
ABPR3,4,5-M-S-PD-0137	V17489,90,91-ICND-003	HRSG High Pressure P&ID
ABPR3,4,5-M-S-PD-0138	V17489,90,91-ICND-004	HRSG Low Pressure P&ID
ABPR3,4,5-M-S-PD-0139	V17489,90,91-ICND-005	HRSG DA, Storage Tank and Heat Exchanger P&ID
ABPR3,4,5-M-S-PD-0140	V17489,90,91-ICND-006	HRSG Blowdown, Silencers, PSV Vents & Drains P&ID
ABPR3,4,5-M-S-HA-0141	V17489,90,91-ICND-010	Process Flow Diagram

3. All data shown is **predicted performance** only. Actual guarantee values for each project shall be in accordance with contract values .

4. Hydrostatic pressure head is not included in any HRSG pressure value.

5. Blowdown has been set at zero for all drums in all cases

6. Pressure drop across the control valves have been assumed for the purpose of predicting the HRSG performance. Actual control valve pressure drop values may vary considerably from this value depending on pump selection and system design.

7. V17489 Amata ABPR3 and V17490 Amata ABPR4 guarantee cases are highlighted in blue. V17491 Amata ABPR5 guarantee cases are highlighted in red. All other cases in this document are predicted performance only.

Date: 7 Feb 2017	HRSG PERFORMANCE DATA	Doc. Number: V17489, V17490, V17491-ICNA-010

TRS - Description		1 - CTG Exhaust			12 - HP Main Steam Outlet Terminal Point			14 - HP Steam Upstream Non-Return Valve			125 - HP Attemperator Outlet			80 - HP Attemperator Spray Water Flow		121 - HP Attemperator Inlet			81 - HP Steam Drum Exit			118 - HP Economizer Outlet into Drum			170 - HP Economizer Outlet upstream Drum Lvl CV		
[illegible]	[illegible]	[illegible]	[illegible]	[illegible]	[illegible]	[illegible]	[illegible]	[illegible]	[illegible]	[illegible]	[illegible]	[illegible]	[illegible]	[illegible]	[illegible]	[illegible]	[illegible]	[illegible]	[illegible]	[illegible]	[illegible]	[illegible]	[illegible]	[illegible]	[illegible]	[illegible]	[illegible]

Notes:
1. All pressures in this table do not include hydrostatic head.
2. V17489 Amata ABPR3 and V17490 Amata ABPR4 Guarantee Cases are Highlighted in Blue. V17491 Amata ABPR5 Guaratnee Cases are Highlighted in Red. All other cases in this document are predicted performance only.

TRS - Description		72 - Fuel Gas Extraction			111 - HP Economizer Inlet			65 - LPSH Pegging Steam to Deaerator			34 - LP Main Steam Outlet Terminal Point			189 - LP Steam Upstream NRV			185 - LP Steam Drum Exit			86 - LP Economizer Flow into LP Drum			85 - LP Economizer Outlet upstream Drum Lvl CV (after pegging extraction)			83 - LP Economizer Outlet Hot Water Pegging to DA		
[illegible]	[illegible]	[illegible]	[illegible]	[illegible]	[illegible]	[illegible]	[illegible]	[illegible]	[illegible]	[illegible]	[illegible]	[illegible]	[illegible]	[illegible]	[illegible]	[illegible]	[illegible]	[illegible]	[illegible]	[illegible]	[illegible]	[illegible]	[illegible]	[illegible]	[illegible]	[illegible]	[illegible]	[illegible]
Notes: 1. All pressures in this table do not include hydrostatic head. 2. V17489 Amata ABPR3 and V17490 Amata ABPR4 Guarantee Cases are Highlighted in Blue. V17491 Amata ABPR5 Guaratnee Cases are Highlighted in Red. All other cases in this document are predicted performance only.								Flows are per HRSG			Includes LPSH pegging to DA. Pegging steam removed after Vogt's Terminal Point.									Assumes a fixed 3.45 bar pressure drop across the LP feedwater control valve and also includes piping pressure drop for all operating cases.						Flows are per HRSG		

TRS - Description		102 - LP Economizer Outlet			66-LP Economizer Inlet			58-Heat Exchanger Hot Out (to HP/LP Feedwater Pumps)			57-Heat Exchanger Hot In (from Deaerator)			71-Heat Exchanger Cold Out (to Deaerator)			70-Heat Exchanger Cold In (from Condensate)		
[illegible]	[illegible]	[illegible]	[illegible]	[illegible]	[illegible]	[illegible]	[illegible]	[illegible]	[illegible]	[illegible]	[illegible]	[illegible]	[illegible]	[illegible]	[illegible]	[illegible]	[illegible]	[illegible]	[illegible]
Notes: 1. All pressures in this table do not include hydrostatic head. 2. V17489 Amata ABPR3 and V17490 Amata ABPR4 Guarantee Cases are Highlighted in Blue. V17491 Amata ABPR5 Guaratnee Cases are Highlighted in Red. All other cases in this document are predicted performance only.								Flows are per HRSG			Flows are per HRSG			Flows are per HRSG			Flows are per HRSG		

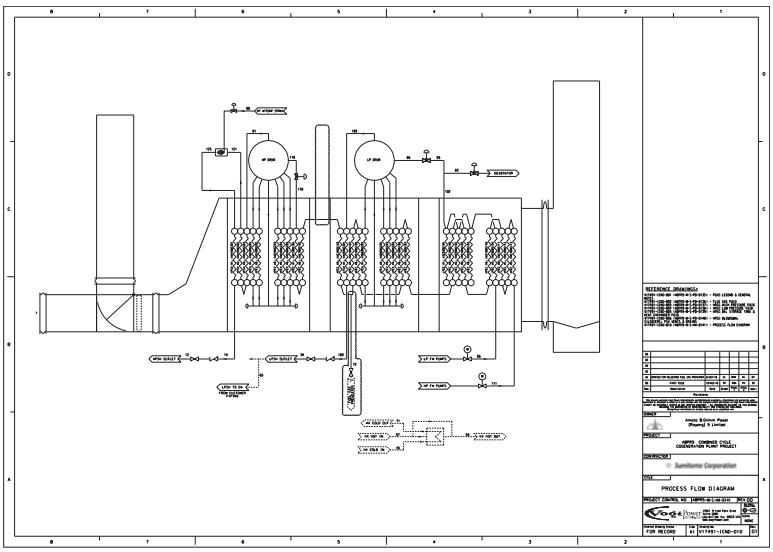

5.0 START- UP PROCEDURE

Please see document numbers V17491-DENE-001, "Start Up and Shut Down Procedure", and V17491-ICNF-001 "HRSG Control System Philosophy Description", attached.

START-UP AND SHUTDOWN PROCEDURE

FOR

Amata B. Grimm Power (Rayong) 5 Limited

FOR

Vogt Power International Job 17491 (Amata ABPR5)

VOGT POWER INTERNATIONAL DOCUMENT NO. V17491-DENE-001

OWNER	Amata B.Grimm Power (Rayong) 5 Limited
PROJECT	ABPR5 Combined Cycle Cogeneration Plant Project
CONTRACTOR	Sumitomo Corporation
TITLE	HRSG Start-up and Shutdown Procedure
PROJECT CONTROL NO.	REV. 00

Prepared By: **George Zhan (I & C Engineer)**

Reviewed By: **Poonsap Homniyom (Project Engineer)**

Approved By: **Kristie Beaven (Director of Engineering)**

HRSG START-UP AND SHUTDOWN PROCEDURE

REVISION RECORD

Revision	Date	Engineer	Description	Pages Revised
0	09/23/16	George Zhan	Initial Issue	

HRSG START-UP AND SHUTDOWN PROCEDURE

TABLE OF CONTENTS

1.0 GENERAL START-UP CONSIDERATIONS 4
2.0 START UP PREREQUISITES AND REQUIREMENTS 5
3.0 START UP RECOMMENDATIONS 6
4.0 START-UP PROCEDURE: VALVE ALIGNMENT AND USE 7
5.0 START-UP PROCEDURE: HRSG AND SUB-SYSTEM SEQUENCE OF EVENTS 8
6.0 SHUTDOWN PROCEDURE FOR HRSG 10
7.0 GENERAL NOTES 10
8.0 REFERENCES 11
9.0 ABBREVIATIONS 11
APPENDIX A - RECOMMENDED VALVE POSITION LIST FOR START-UP OF HRSG 12
APPENDIX B – DRUM OPERATION LIMITING CURVES 18

1.0 GENERAL START-UP CONSIDERATIONS

1.1 The start-up procedure outlines the required actions in order to bring the HRSG and its associated sub-systems on line and to bring the HRSG to normal operation. The start-up process depends on thermodynamic system characteristics and we need to consider some factors to avoid producing stresses that will have influences on the lifetime of HRSG. When the HRSG is started-up, some protection systems are important to protect HRSG to reach normal operation during start-up. The SPP Amata Nakorn Combined Cycle Project is 2 on 2 configurations consisting of two combustion turbine generators (CTG), two heat recovery steam generators (HRSG) and one steam turbine.

1.2 Traditionally, there is a distinction between HRSG cold (C), warm (W), and hot (H) start-ups. Those start-ups differ from each other by the time elapsed after preceding plant shutdown and, what is more important, by the initial conditions of HP steam drum water prior to the start-up. We increase the HP drum pressure to reach normal operation according to maximum allowable temperature and pressure ramp curves during start-up.

The consideration below is given to three basic types of start-ups:

Cold (type C)–When the initial HP drum pressure: (0 barg≤HP Drum Pressure≤ 13.789 barg);
When the initial HP drum temperature at 70 °F (21.11°C)

Warm (type W) – When the initial HP drum pressure: (13.789 barg ≤HP Drum Pressure≤ 48.263barg);
When the initial HP drum temperature at 388 °F (197.66°C)

Hot (type H) - When the initial HP drum pressure: (48.263barg ≤HP Drum Pressure).
When the initial HP drum temperature at 505 °F (263.02°C)

1.3 For any start-up cycle the ramp in CTG load and/or HP drum pressure should be controlled in order to produce a ramp rate of 11.11°C/min of HP drum water temperature for cold start-up,warm and hot start-up. This ramp rate must be applied to start-up cycles only. This start-up ramp rate shall apply to HRSG Cycle until the Drum pressure reaches a full operational pressure (80.724barg) at steady state Conditions corresponding to CTG load. When gas turbine is on and HRSG is started, the Diverter Damper needs to be opened gradually according to the drum temperature ramp rate control. (Please reference: File V17490-ICNF-001). Please note, that the HP Drum water temperature ramp rate is calculated using saturation temperature corresponding to the measured saturation Drum pressure.

1.4 To streamline the whole process it is reasonable to identify the initial and end points of start-up in the following manner:

For the purposes of this start-up procedure, the initial point of the HRSG start-up is the gas turbine ignition, when the heat input to the HRSG begins. It is understood that some preparation work needs to be done prior to this point (see Section 1.2 below). In the start-up cycle curves of Appendix B, this initial point of start-up is considered time = 0 minutes.

At the end point of the HRSG start-up the following conditions are in place:

1.4.1 All Drums have also reached a constant, stable pressure and the drum water levels are successfully being maintained at NWL by feedwater controller.

1.4.2 Steam outlet parameters of pressure, temperature, and mass flow have reached a constant and steady measurement.

1.4.3 Check and Isolation valves in main steam lines (HP and LP) are open. It is allowable to open the valves from the very beginning of the start-up of the HRSG.

1.4.4 Superheated steam (HP and LP) can be piped to the STG bypasses or to the STG itself - once the corresponding system is ready.

1.4.5 All start-up vent valves (HP and LP) are fully closed.

1.4.6 Feedwater should be supplied to steam drums (HP and LP) with drum level control valves (CV) on “Auto”.

1.4.7 Intermittent blowdown cycles (HP and LP) should be completed. Consult the water chemistry expert for appropriate instructions.

1.4.8 Continuous blowdown systems (HP and LP) should be ready for operation.

1.4.9 Isolation valves in water/steam supply lines to attemperators are operational - with steam temperature CVs on “Auto”. Isolation valves will automatically be opened prior to opening of CVs.

2.0 START UP PREREQUISITES AND REQUIREMENTS

2.1 HRSG sub-systems and Power Plant main systems and equipment are operational and ready to support the boiler start-up.

2.2 All valves for instrumentation isolation (pressure gauges, drum level gauges, flow element pressure differential gauges, etc.) must be open to allow for proper measurement and control of the HRSG. Please refer to the P&ID drawings for normal valve position settings during steady operation.

2.3 Initial water levels in the drums depend on the drum steam pressure prior to the start-up.
Water levels in the drums should have a permissive for GT light-off.
For cold start up, initial water level is (reference to NWL):

HP Drum: -11.04 inch (-280.416mm);
LP Drum: -21.12 inch (-536.448mm).

2.4 During start-up of the HRSG, the HP drum saturation temperature must be controlled to a 11.11 °C/min ramp rate for C start-up and W / H start-ups as defined in start-up curve Figures B.1 through B.4 for C, W, and H start-ups, respectively (in Appendix B). These curves define the most rapid time allowable to reach full plant load.

3.0 START UP RECOMMENDATIONS

3.1 During start-up, it is reasonable to have the plant condenser on-line as soon as possible. The STG bypass system and plant condenser must be online if a CTG is loaded above 25% baseload because the HP start-up vent valve has not been designed to handle flows above this CTG load point. Therefore, a delay in HRSG start-up curve may be required when cold starting a single CTG with the STG off-line. Minimum HRSG steam pressure (“floor” pressure) has been established by an agreement between the customer and VPI for the HP and LP drums.

3.2 The main priority during the HRSG start-up should always be the metal temperature condition in the HP drum. HRSG start-up is not limited by metal temperatures in the HP superheater modules. The LP sections are not a concern. The HP attemperator outlet steam temperature should be maintained 13.89°C above saturation temperature during start up. The HP attemperator outlet steam temperature should be maintained 27.78°C above saturation temperature during normal operation.

3.3 The HRSG is equipped with inter-stage attemperators in HP SH sections to control final steam temperature to the STG. The HP inter-stage attemperator outlet steam temperature setpoint is low limited to a minimum of 50 °F 27.78°C above the steam saturation temperature (Tsat) in order to prevent steam condensation in the steam attemperator piping. During start-up, steam from the HRSG

may be used to warm steam lines and the STG itself. In these situations, the final steam temperature from the HRSG may greatly exceed the maximum temperature allowed for STG warming. The HRSG may not be able to adequately attemperate final steam temperature without violating the ≥ Tsat+ 50°F 27.78°C superheat requirement. In these transient operations, it may be possible to modulate CTG load in order to produce an acceptable final steam temperature out of the HRSG and the degree of superheat downstream of attemperators can be as low as Tsat plus 30 ºF (16.67 ºC).

3.4 After the HRSG start-up the CVs in the BFP recirculation line to the HP and LP drum should be controlled per the pump manufacturer's requirements.

3.5 After the HRSG is running at normal operation and some trip signals to HRSG come, the Diverter Damper needs to be closed. If the Diverter Damper is failure to be closed, the gas turbine trips.

3.6 Refer to VPI document V17491-ICNF-001, "HRSG CONTROL SYSTEMS PHILOSOPHY DESCRIPTION" for a thorough explanation of control system operation during start-up.

4.0 START-UP PROCEDURE: VALVE ALIGNMENT AND USE

4.1 Recommended position and operating conditions of all HRSG valves required during start-up are outlined in Table A.1 in Appendix A.

4.2 For any HRSG cold, warm, or hot start-up, the following general valve positions should be followed. Any special valve treatments for a cold, warm or hot start-up will also be discussed.

4.2.1 All feedwater inlet pipeline vents and drains shall remain closed during any start-up cycle.

4.2.2 All Economizer and Evaporator drains shall be closed. During start-up, it is not recommended to open the EV intermittent blowdown valve (IBD) or drum continuous blowdown valve (CBD) for water purity control. However, the IBD may be used to help control drum water level during start-up.

4.2.3 All Economizer manual vents should be closed except for those listed as normally open on the P&ID drawings. The EC vent header pipe MOV shall be in "Auto" and will open when steaming conditions are measured in the EC section.

4.2.4 No manual blowdown valves of drum level gauges shall be opened during start-up. No chemical feed valves shall admit flow into any drum during start-up.

4.2.5 HP superheater drains under DCS control should be set to "Auto" and automatically open to drain any condensate formed prior to start-up. All LP SH low point drains should be opened momentarily to drain any condensate which may be present. Automatic drain pot valve downstream of the HP attemperator, is used to prevent condensation from damaging the HP Superheater during startup and/or upset conditions.

4.2.6 All HP Superheater attemperator loop is equipped with condensate pots. They should automatically open to drain any condensate formed prior to start-up.

4.2.7 All HP SH high point vents and drum vents shall remain closed during start-up if the pressure prior to start-up is greater than 50 psig (3.45barg). However if it is suspected that air may have infiltrated into the HRSG system, the high point vent should be opened to purge the steam volume. If the system pressure is less than 25 psig (1.724barg) prior to start-up, the HP SH vents and drum vents shall be kept open until the system pressure builds to over 25 psig (1.724barg).

4.2.8 The HP Steam produced shall be bypassed to the condenser. Either the HP start-up vent valve or the HP bypass valve shall be used to control system pressures to allow proper saturation temperature ramp of the HP drum. The HP bypass should be initiated as soon as possible to provide cooling flow to the tubes, in order to avoid overheating and/or thermal shock.

4.2.9 If the plant condenser is off-line prior to start-up of a HRSG, any steam generated shall be vented to atmosphere by the start-up vents. The main steam MOV outlet stop valve on LP and HP shall remain closed until sufficient operational margins have been established. Opening this valve with little or negative margins may cause undesirable chattering of the steam outlet check valve. If there is sufficient backpressure on the steam outlet stop valve (due to a hot start), or the STG bypass system is in operation, the MOV stop valve may be opened immediately after successful ignition of the CTG. In this manner, steam vented to atmosphere can be minimized.

5.0 START-UP PROCEDURE: HRSG AND SUB-SYSTEM SEQUENCE OF EVENTS

5.1 Make sure the water level in the drums (HP and LP) is at a start-up level for the type of start-up; hot, warm, or cold. The warm and hot start-up levels in the drums (HP and LP) are based on drum pressure. When the drum pressure is increased, the initial start-up level for warm and hot is close to "0" inch.

5.2 Start the boiler feedwater pump using the recirculation-line available. After the boiler feedwater pump is on-line, place the water flow control valve in the recirculation-line on "Auto". The setpoint (water flow) for the correspondent controller should be established in accordance with the minimum flow recommendations of the boiler feedwater pump supplier. Do not supply any feedwater to any HRSG drum yet. Also, do not initiate any feedwater extractions from upstream or downstream of the economizers. A reasonable sequence of actions is suggested below.

5.3 When HRSG start program permissive conditions are satisfied, start sequence control program executes.

5.4 Start and ramp the CTG according to its normal start-up scenario: purge, light-off, FSNL (if necessary), spinning reserve (if necessary), ramp to baseload. Before the CTG light-off, verify that all the requirements to the condensate and that feedwater quality are met (consult water professional).

5.5 Monitor the saturation pressure and temperature ramp rate in the HP drum. These rates are prescribed by the start-up curves (Figures B.1 through B.4). The ramp rates can be maintained by modulating the HP SH steam vent control valve and HP steam turbine bypass control valve.

5.6 To get the steam turbine bypasses (HP and LP) on-line their corresponding pressure set points have to be equal or slightly higher than the current pressure in the upstream main steam lines. Then, the pressure CVs in all Steam Turbine bypass lines should be place on "Auto". Gradually close the Superheater start-up vent valves. CVs in steam turbine bypasses will take over the HP drum temperature ramp rate and Superheater outlet steam pressure control.

5.7 Watch the level position in the drums (HP and LP). The main subject of concern is the level in the HP drum. If the current level position becomes too close to the "High Level Alarm" use the MOVs in the evaporator IBD lines to decrease the level. Do not use the evaporator continuous blowdown system or manually operated valves in the evaporator drain lines for this purpose.

5.8 During start-up, the drum levels are established by single element control. As steam is generated and exits the drum, the single element control will maintain water level through drum swell and into continuous feedwater operation. When the steam flow rate is greater than 30% of the full load flow rate,

a three element, feedforward/feedback drum level control loop is used to control drum water levels at NWL.

5.9 When the HP drum pressure is equal to or greater than the minimum "floor" pressure, use the intermittent blowdown valves to improve the boiler water purity (remove the sludge). Consult a water professional to establish the appropriate criteria for this process (time period, valve position, decrease in water level position, etc.). Also consult a water professional for correspondent setpoints for the continuous blowdown of each drum.

6.0 SHUTDOWN PROCEDURE FOR HRSG

6.1 The maximum allowable shutdown rate for HP drum saturation temperature does not depend upon the type of start-up cycle during baseload operation.

6.2 The normal criterion for shutdown of the HRSG is to maintain a minimum temperature reduction in saturation temperature from maximum pressure in the HP drum prior to shutdown. Although it is considered impossible to maintain an near 0 ºC/min cool down for HP drum temperature during shutdown, the overall ramp rate averaged between maximum drum pressure prior to shutdown and minimum drum pressure prior to re-start must not significantly exceed limited shutdown temperature ramp rate requirement. The limited shutdown temperature ramp rate is 10 ºF/min (5.56 ºC/min) from maximum pressure at 100% GT load to HP drum pressure 0 barg.

6.3 When GT is off, stop program is activated. After stop program is activated, and the HP attemperator spray water block valves are closed.

7.0 GENERAL NOTES

7.1 Before the CTG light-off, verify that all the requirements to the condensate and that the feedwater quality are met (consult water professional).

7.2 At the end of the start-up verify that all the requirements of the saturated and superheated steam quality and purity, in all HRSG pressure levels, are met. Also verify the boiler water quality in the drums. If all the requirements of the customer specification are met (consult a water professional), it is allowable to supply steam to the STG.

7.3 Minimum HRSG steam pressure or the floor pressure in the drums is to be maintained by the plant control system with the help of the STG control valves or the STG bypass system. After the steam turbine is on-line, the HRSG can be in sliding pressure operation for a pressure range from the "floor" up

to the maximum pressure (MAWP) at the CTG base load. The corresponding logic should be incorporated into the plant DCS and dependent control systems (STG, CTG).

8.0 REFERENCES

V17491-ICND-001	P&ID Legend & General Notes
V17491-ICND-002	Flue Gas P&ID
V17491-ICND-003	High Pressure P&ID
V17491-ICND-004	Low Pressure P&ID
V17491-ICND-005	DA, Storage Tank, and Heat Exchanger P&ID
V17491-ICND-006	Blowdown, Silencers, PSV Vents & Drains P&ID
V17491-ICND-010	Process Flow Diagram
V17491-ICNF-001	HRSG CONTROL SYSTEMS PHILOSOPHY DESCRIPTION

9.0 ABBREVIATIONS

AT	–	approach temperature
BFP	–	boiler feedwater pump
CC	–	combined cycle
CND	–	plant steam condenser
CTG	–	combustion turbine generator
CV	–	control valve
DCS	–	distributed control system
EC	–	economizer
EV	–	evaporator
FSNL	–	full speed, no load
HP	–	high pressure
H/W	–	hot/warm start-up
LP	–	low pressure
MAWP	–	maximum allowable working pressure
MOV	–	motor operated valve
NWL	–	normal water level
O&M	–	operation & maintenance
PP	–	power plant
SH	–	superheater
STG	–	steam turbine generator

Appendix A

Recommended Valve Position List for Start-Up of HRSG

APPENDIX A– RECOMMENDED VALVE POSITION LIST FOR START-UP

Tag Number	Description	Position
LP SYSTEM STEAM AND WATER DRAINS		
LAB50AA501/ LAB50AA502/ LAB50AA503/ LAB50AA504 LAB50AA505/ LAB50AA506	LP Feedwater Inlet Pipe Drain	Closed
HAD50AA502/ HAD50AA503 HAD50AA504	LP Drum Water Column Drains	Closed
HAD50AA501	LP Continuous Blowdown Isolation	Open
HAC50AA504	LP Economizer # MS104 Drain	Closed
HAC50AA503	LP Economizer # MS103 Drain	Closed
HAC50AA502	LP Economizer # MS102 Drain	Closed
HAC50AA501	LP Economizer # MS101 Drain	Closed
HAC50AA505	LP Economizer Drain To Blowdown Tank Valve	Closed
HAD50AA201	LP Continuous Blowdown Control Valve	Set Up "Auto"
HAC50AA802	CHEM Feed to LP Drum Valves	Open
HAD50AA505	LP EV Intermittent Blowdown Valve	Open
HAD50AA102	LP EV Intermittent Blowdown Valve	Set to "Auto"
HAH50AA502/ HAH50AA503	LPSH Outlet Drain Pot Drain	Closed
HAH50AA504/ HAH50AA505	LPSH Outlet Drain Pot Drain	Closed
HAH50AA501	LPSH Outlet Drain Pot Drain	Open
HAH50AA202	LPSH Outlet Drain Pot Drain	Set to "Auto"
HAC50AA506/HAC50AA507	LP Feedwater Control Valve Drain Valve	Closed
HAH50AA002	LPSH Outlet Steam Stop Valve	Open
HAH50AA803/ HAH50AA804	LPSH Outlet Steam to Sample	Open
HAD50AA801/HAD50AA802	LP Drum Outlet Steam to Sample	Open
LP SYSTEM VENTS		
HAD50AA601	LP Drum Vent	Closed
HAD50AA101	LP Drum Vent	Set to "Auto"
HAC50AA604	LP Economizer MS104 Vent	Closed
HAC50AA603	LP Economizer MS103 Vent	Closed
HAC50AA602	LP Economizer MS102 Vent	Closed
HAC50AA601	LP Economizer MS101 Vent	Open
HAC50AA101	LP Economizer Vent	Set to "Auto"
HAH50AA003	LP Steam Start-Up Vent Valve	Open

HAH50AA102	LP Steam Start-Up Vent Control Valve	Set to "Auto"
LP SYSTEM OPERATIONAL VALVES		
HAC50AA201	LP Drum Level Control Valve	Closed at start-up. Set to "Auto" when Gas Turbine is On.
HAC50AA003	LP Feedwater Bypass Isolation Valve	Closed
HAD50AA801/HAD50AA802	LP Drum to Sample Isolation Valves	Open
LAB50AA101	LP Feedwater Stopl Valve	Open
HAC50AA001/ HAC50AA002	LP Drum Feedwater Isolation Valve	Open
HP SYSTEM STEAM AND WATER DRAINS		
LAB10AA501/ LAB10AA502	HP Feedwater Inlet Pipe Drain	Closed
LAB10AA503/ LAB10AA504	HP Feedwater Inlet Pipe Drain	Closed
LAB10AA505/ LAB10AA506	HP Feedwater Inlet Pipe Drain	Closed
HAC20AA513	HPEC MS113 Module Drain	Closed
HAC20AA512	HPEC MS112 Module Drain	Closed
HAC20AA511	HPEC MS111 Module Drain	Closed
HAC20AA510	HPEC MS110 Module Drain	Closed
HAC20AA509	HPEC MS109 Module Drain	Closed
HAC20AA508	HPEC MS108 Module Drain	Closed
HAC20AA507	HPEC MS107 Module Drain	Closed
HAC20AA506	HPEC MS106 Module Drain	Closed
HAC20AA505	HPEC MS105 Module Drain	Closed
HAC20AA504	HPEC MS104 Module Drain	Closed
HAC20AA503	HPEC MS103 Module Drain	Closed
HAC20AA502	HPEC MS102 Module Drain	Closed
HAC20AA501	HPEC MS101 Module Drain	Closed
HAC20AA514	HPEC Module Drain	Closed
HAC20AA515	HPEC Module Drain	Closed
HAC20AA516	HPEC Module Drain	Closed
HAH10AA504/HAH10AA505	HP SH Outlet Line Drain Valves	Closed
HAH10AA506/HAH10AA507	HP SH Outlet Line Drain Valves	Closed
HAD10AA502/ HAD10AA503/ HAD10AA504	HP Drum Water Column Drains	Closed
HAD10AA505	HP EV Intermittent Blowdown Valve	Open
HAD10AA103	HP EV Intermittent Blowdown Valve	Set to "Auto"
HAD10AA801/ HAD10AA802	HP DRUM Outlet Line To Sample Isolation Valve	Open
HAC21AA801	Chem Feed Line To HP Drum Stop Valves	Open
HAH10AA803/ HAH10AA804	HPSH Outlet Steam to Sample	Open

HAD10AA501	HP Continuous Blowdown Isolation	Open
HAD10AA201	HP Continuous Blowdown Control Valve	Set Up "Auto"
HAH10AA503	HP SH Steam Outlet Line Drain Valves	Open
HAH10AA204	HP SH Steam Outlet Line Drain Valves	Set to "Auto"
HAH10AA202	HPSH3-2 x-over Drain	Set to "Auto"
HAH10AA501	HPSH3-2 x-over Drain	Open
HAH10AA502	HPSH Inter stage Attemperator Drain Pot Drain	Open
HAH10AA203	HPSH Inter stage Attemperator Drain Pot Drain	Set to "Auto"
HP SYSTEM VENTS		
HAC20AA613	HP Economizer MS113 Vent	Closed
HAC20AA612	HP Economizer MS112 Vent	Closed
HAC20AA611	HP Economizer MS111 Vent	Closed
HAC20AA610	HP Economizer MS110 Vent	Closed
HAC20AA609	HP Economizer MS109 Vent	Closed
HAC20AA608	HP Economizer MS108 Vent	Closed
HAC20AA607	HP Economizer MS107 Vent	Closed
HAC20AA606	HP Economizer MS106 Vent	Closed
HAC20AA605	HP Economizer MS105 Vent	Closed
HAC20AA604	HP Economizer MS104 Vent	Closed
HAC20AA603	HP Economizer MS103 Vent	Closed
HAC20AA602	HP Economizer MS102 Vent	Closed
HAC20AA601	HP Economizer MS101 Vent	Open
HAC20AA101	HP Economizer Vent	Set to "Auto"
HAD10AA101	HP Drum Vent	Set to "Auto"
HAD10AA102	HP Drum Vent	Set to "Auto"
HAH10AA003	HPSH Outlet Startup Vent Isolation	Open
HAH10AA201	HPSH Outlet Startup Vent Valve	Set to "Auto"
HP SYSTEM OPERATIONAL VALVES		
LAB10AA201	HP Feedwater Control Valve	Closed at start-up. Set to "Auto" when Gas Turbine is On.
LAB10AA102	HP Feedwater Inlet Stop Valve	Open
LAB10AA001/ LAB10AA002	HP Drum Feedwater Isolation Valve	Open
LAB10AA004	HP Drum Feedwater Bypass Isolation Valve	Open
HAD10AA801/ HAD10AA802	HP Drum Sat Steam Sample	Open to Sampling System

LAE10AA005	HP Inter stage Attemperator Spray Valve Control Valve Bypass Stop Valve	Closed
LAE10AA001/ LAE10AA002/LAE10AA003	HP Inter stage Attemperator Spray Stop Valve	Open
LAE10AA101	HP Inter stage Attemperator Spray Stop Valve	Set to "Auto"
HAH10AA002	HP SH Outlet Stop Valve	Open
HAH10AC001	HP Inter stage Attemperator Spray Control Valve	Set to "Auto"
BLOWDOWN SYSTEM OPERATIONAL VALVES AND WATER DRAINS		
LCQ11AA504/ LCQ11AA505	Cooling Water To Water Plate Control Valve Drain Valves	Closed
LCQ10AA201	Cooling Water To Water Plate Control Valve	Set to "Auto"
LCQ11AA501/ LCQ11AA502	Blowdown Tank Level Gauge Drain	Closed
LCQ10AA501/ LCQ10AA502	Blowdown Tank Drain	Closed
LCQ10AA003	Cooling Water To Water Plate Bypass Stop Valve	Closed
LCQ10AA001/ LCQ10AA002	Cooling Water To Water Plate Stop Valve	Open
EXTERNAL DEAERATOR		
LAA10AA102	DA Vent Valve	Set to "Auto"
LAA10AA202	Customer LP Steam to DA Control Valve	Set to "Auto"
LAA10AA801	Chemical Feed To DA Isolation Valve	Open
LAA10AA005	LP ECON UNIT41to DA Bypass Stop Valve	Closed
LAA10AA003/ LAA10AA004/ LAA10AA001	LP ECON UNIT41to DA Stop Valve	Open
LAA10AA501/ LAA10AA502	LP ECON UNIT41 to DA Control Valve Drain Valves	Closed
LAA10AA201	LP ECON UNIT41 to DA Control Valve	Set to "Auto"
LAA10AA005	LP ECON UNIT42 to DA Bypass Stop Valve	Closed
LAA10AA003/ LAA10AA004/ LAA10AA001	LP ECON UNIT42 to DA Stop Valve	Open
LAA10AA501/ LAA10AA502	LP ECON UNIT42 to DA Control	Closed

	Valve Drain Valves	
LAA10AA201	LP ECON UNIT42 to DA Control Valve	Set to "Auto"
LAA10AA602	N2 System To DA Isolation Valve	Open
LAA11AA001/ LAA11AA002	COND Pumps to DA Isolation Valves	Open
LAA11AA003	COND Pumps to DA Bypass Isolation Valve	Closed
LAA11AA201	COND Pumps to DA Control Valve	Set to "Auto"
LAA10AA007/LAA10AA008/ LAA10AA009	HP Feedwater Pump Minimum Flow Line To DA Isolation Valve	Open
LAA10AA010/LAA10AA011/ LAA10AA012	LP Feedwater Pump Minimum Flow Line To DA Isolation Valve	Open

Appendix B

Drum Operating Limiting Curves

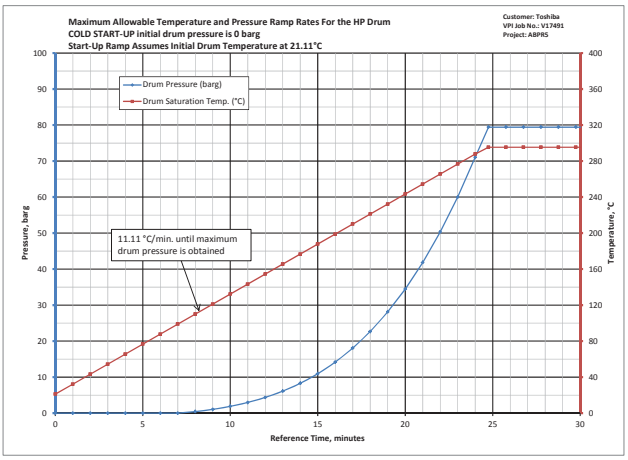
Maximum Allowable Temperature and Pressure Ramp Rates For the HP Drum
COLD START-UP initial drum pressure is 0 barg
Start-Up Ramp Assumes Initial Drum Temperature at 21.11°C
Customer: Toshiba
VPI Job No.: V17491
Project: ABPRS
Drum Pressure (barg)
Drum Saturation Temp. (°C)
11.11 °C/min. until maximum drum pressure is obtained
Pressure, barg
Temperature, °C
Reference Time, minutes

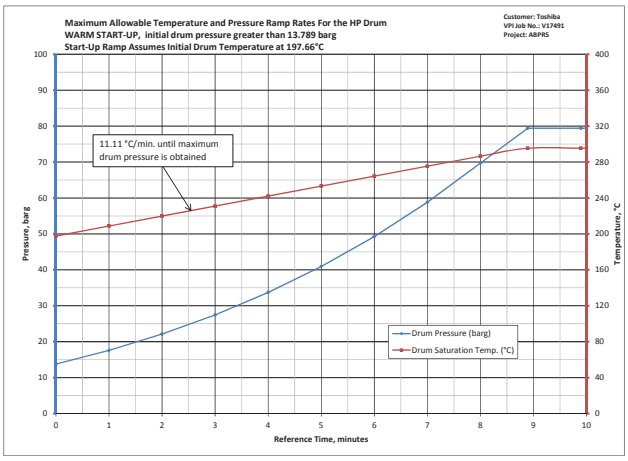
Maximum Allowable Temperature and Pressure Ramp Rates For the HP Drum
WARM START-UP, initial drum pressure greater than 13.789 barg
Start-Up Ramp Assumes Initial Drum Temperature at 197.66°C
Customer: Toshiba
VPI Job No.: V17491
Project: ABPRS
11.11 °C/min. until maximum drum pressure is obtained
Drum Pressure (barg)
Drum Saturation Temp. (°C)
Pressure, barg
Temperature, °C
Reference Time, minutes

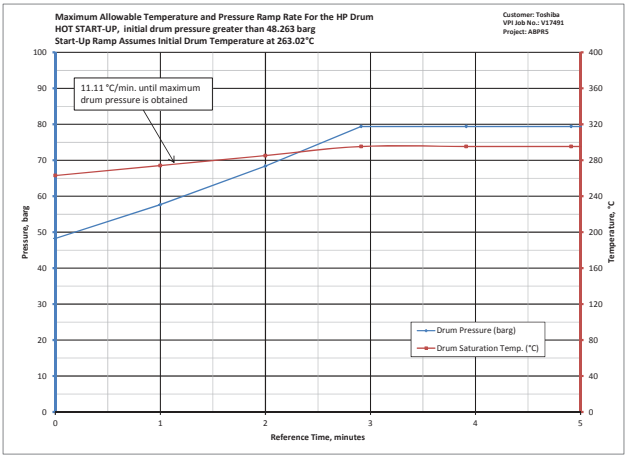
Maximum Allowable Temperature and Pressure Ramp Rate For the HP Drum
HOT START-UP, initial drum pressure greater than 48.263 barg
Start-Up Ramp Assumes Initial Drum Temperature at 263.02°C
Customer: Toshiba
VPI Job No.: V17491
Project: ABPRS
11.11 °C/min. until maximum drum pressure is obtained
Drum Pressure (barg)
Drum Saturation Temp. (°C)
Pressure, barg
Temperature, °C
Reference Time, minutes

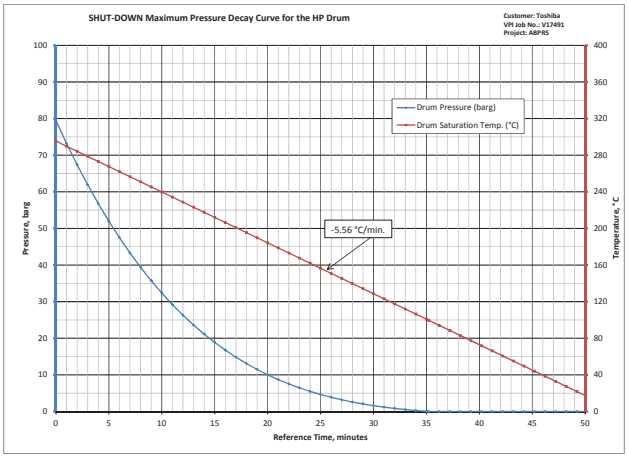
SHUT-DOWN Maximum Pressure Decay Curve for the HP Drum
Customer: Toshiba
VPI Job No.: V17491
Project: ABPRS
Drum Pressure (barg)
Drum Saturation Temp. (°C)
-5.56 °C/min.
Pressure, barg
Temperature, °C
Reference Time, minutes

HRSG CONTROL SYSTEM PHILOSOPHY DESCRIPTION

FOR

Amata B. Grimm Power (Rayong) 5 Limited

FOR

Vogt Power International Job 17491 (Amata ABPR5)

VOGT POWER INTERNATIONAL DOCUMENT NO. V17491-ICNF-001

OWNER		
Amata B.Grimm Power (Rayong) 5 Limited		
PROJECT		
ABPR5 Combined Cycle Cogeneration Plant Project		
CONTRACTOR		
Sumitomo Corporation		
TITLE		
HRSG Control Philosophy Description		
PROJECT CONTROL NO.	ABPR5-K-S-HA-2002	REV. 00

Prepared By: **George Zhan (I & C Engineer)**

Reviewed By: **Poonsap Homniyom (Project Engineer)**

Approved By: **Kristie Beaven (Director of Engineering)**

This Control philosophy and Start up and Shutdown procedure is a conceptual representation only of the recommended operation and control requirements of the HRSG based upon code requirements, industry practices and our understanding of the customer's operational needs. Persons with skill and experience in the operation of an HRSG may have different means for accomplishing the same end results in a safe manner. Should the customer find it necessary or desirable to fine tune or alter the information for inclusion in the final control program of the system that customer ultimately employs, the risk, responsibility and cost of such effort will lie entirely with customer. As such, any coordination, alteration or adjustment of the Logic Presentation / Control philosophy will not be subject to backcharge by the customer. Vogt will not change our recommendation in order to conform to final as programmed logics used by the customer. However, any omissions, additions or corrections needed for proper safe operation of which we become aware will be addressed

HRSG CONTROL SYSTEM PHILOSOPHY DESCRIPTION
AND START-UP AND SHUTDOWN PROCEDURE
REVISION RECORD

Revision	Date	Engineer	Description	Pages Revised
0	08/31/16	George Zhan	Initial Issue	

HRSG CONTROL SYSTEM PHILOSOPHY DESCRIPTION
TABLE OF CONTENTS

1.0 HRSG INTERLOCKS, ALARMS & SIGNALS MONITORING PER NFPA 85 5
2.0 HP DRUM LEVEL CONTROL 10
3.0 LP DRUM LEVEL CONTROL 14
4.0 HP DRUM LEVEL REMOTE LEVEL INDICATION PER ASME BOILER CODE 17
5.0 LP DRUM LEVEL REMOTE LEVEL INDICATION PER ASME BOILER CODE 18
6.0 HP SUPERHEATER MAIN STEAM TEMPERATURE CONTROL 18
7.0 HP SH STEAM START UP VENT CONTROL 20
8.0 CONTROL OF HP BYPASS FOR HP DRUM TEMPERATURE RAMP RATE 21
9.0 DIVERT DAMPER CONTROL 22
10.0 LP SH STEAM STARTUP VENT CONTROL 23
11.0 HP CONTINUOUS BLOWDOWN (CBD) VALVE CONTROL 23
12.0 LP CONTINUOUS BLOWDOWN (CBD) VALVE CONTROL 24
13.0 BLOWDOWN TANK TEMPERATURE CONTROL 24
14.0 EXTERNAL DEAERATOR PRESSURE CONTROL 24
15.0 EXTERNAL DEAERATOR LEVEL CONTROL 25
16.0 HP INTERMITTENT BLOWDOWN (IBD) VALVE CONTROL 26
17.0 LP INTERMITTENT BLOWDOWN (IBD) VALVE CONTROL 26
18.0 CONTROL OF HP DRUM VENT VALVES 27
19.0 CONTROL OF LP DRUM VENT VALVES 27
20.0 EXTERNAL DEAERATOR VENT VALVE CONTROL 27
21.0 CONTROL OF HP ECONOMIZER MANIFOLD VENT VALVE 28
22.0 CONTROL OF LP ECONOMIZER MANIFOLD VENT VALVE 28
23.0 CONTROL OF HP SH OUTLET LINE AUTOMATIC DRAIN POT 28
24.0 CONTROL OF HP SH ATTEMPERATOR AUTOMATIC DRAIN POT 29

25.0 CONTROL OF HP MODULE MS302 AND MS303 CROSSOVER AUTOMATIC DRAIN POT 29
26.0 CONTROL OF LP SH OUTLET LINE AUTOMATIC DRAIN POT BEFORE STEAM STOP VALVE 30
27.0 CONTROL OF MOTOR OPERATED OPEN/CLOSE VALVES 30
28.0 SIGNAL MONITORING FOR PERFORMANCE INDICATION AND ALARMS (AS REQUIRED) 31
29.0 APPENDIX A - DENSITY COMPENSATED STEAM DRUM LEVEL EQUATIONS 34

1.0 HRSG INTERLOCKS, ALARMS & SIGNALS MONITORING PER NFPA 85

1.1 Per NFPA 85 requirements an HRSG safety interlock system "shall be installed to protect personnel from injury and to protect equipment from damage." NFPA 85 states that "interlock functions shall be initiated by one or more of the following - 1) switches independent of control functions and signals, 2) two analog signals with a divergence alarm, and 3) three analog signals employing an auctioneering system and a divergence alarm or other fault diagnostic alarm. To meet the requirements of NFPA 85 a Distributed Control System (DCS) (by others) is designed to manage all interlock and alarm signals related to the safe operation of the HRSG with respect to the Combustion Turbine (CT).

1.2 For example, drum level is measured by three level transmitters and drum pressure is measured by two pressure transmitters. The drum level and pressure transmitters send 4-20 mA measurement signals to the DCS for drum level control and indication. Measurement values are compared and validated based on a two of three auctioneering logic in the DCS. Average values of drum level and pressure are determined and used to calculate the density compensated drum level. The average pressure measurement is used to determine steam and water density data. The density or specific gravity values are used to compensate the average level measurement for density differences between the HP drum water and water in the level transmitter's 'cold' measurement leg, which is at ambient temperature. If the compensated drum level referenced to the drum NWL is at a LOW drum level condition, the DCS energizes audible and visual alarm indications. If the compensated drum level referenced to the drum NWL is at a LOW-LOW drum level condition, the DCS sends a digital signal to the CT control system to runback CT load. If the compensated drum level referenced to the drum normal water level (NWL) is at a HIGH-HIGH-HIGH drum level condition, the DCS trips the ST. If the compensated drum level referenced to the drum normal water level (NWL) is at a LOW-LOW-LOW drum level condition, the DCS also trips the CTG.

1.3 Normally three transmitter (or temperature element) measurements of the same parameter are compared in the DCS, but two transmitter (or temperature element) measurements can also be compared. If three transmitter (or temperature element) measurements are compared, a two of three auctioneering logic is used in the DCS. The average value is normally based on three measurements if all three measurements are valid. A measurement is valid if it is within the calibrated transmitter range and its value is within a specified tolerance of either of the other two measurements. Upon comparison of the transmitter (or temperature element) measurement values, if any of the values is not within the specified tolerance of both of the other two values or if any transmitter (or temperature element) measurement is out of range, a 'measurement deviation / bad quality' alarm for that transmitter (or

temperature element) is raised at the DCS. If none of the measurement comparisons are within the specified tolerance, the CT is tripped and/or a 'bad overall average measurement' alarm is also raised at the DCS. If only two transmitter (or temperature element) measurements of the same parameter are compared, the average value is used in the DCS. If the measurement comparison does not meet the specified tolerance, the deviation alarm is raised for the other transmitter (or temperature element) at the DCS.

1.4 The following HRSG parameters, which are determined in the DCS, are interlocks for starting the CT:

1. HP Drum Level (density compensated, average value of 2 of 3 auctioneering of HP drum level measurements from dP transmitters, HAD10CL001, HAD10CL002 & HAD10CL003, which send 4-20 mA signals to the DCS Controller) is within the defined startup range (i.e., ≥ -355.6 millimeter (-14 in., ref. NWL)).
2. HP Drum Pressure (average value of HP drum pressure measurements from pressure transmitters, HAD10CP001& HAD10CP002, which send 4-20 mA signals to the DCS Controller) is not HIGH (i.e., ≤ 82.737 barg (1200 psig)).
3. LP Drum Level (density compensated, average value of 2 of 3 auctioneering of LP drum level measurements from dP transmitters, HAD50CL001, HAD50CL002 & HAD50CL003, which send 4-20 mA signals to the DCS Controller) is within the defined startup range (i.e., ≥ -12.192 millimeter (-0.48 in., ref. NWL)).
4. LP Drum Pressure (average value of LP drum pressure measurements from pressure transmitters, HAD50CP001 & HAD50CP002, which send 4-20 mA signals to the DCS Controller) is not HIGH (i.e., ≤ 8.963 barg (130 psig)).
5. HRSG Duct Exhaust Gas Pressure (HRSG Duct Pressure based on either of two HRSG Duct pressure transmitter, HNB10CP001 thru HNB10CP004, which send 4-20 mA signals to the DCS Controller) is not HIGH (i.e., ≤ 584.2 millimeter. H_2O (23 in.H_2O)).
6. The HRSG feedwater supply system is available to respond to demand (proven by full open HP feedwater block valve actuator 'open' limit switch activation).
7. Position of HRSG Diverter Damper(State of HRSG diverter damper position based on HRSG Diverter Damper 'open' and 'closed' limit switches, which send digital input signals to the DCS

control system) is correct (i.e., HRSG Diverter Stack Damper Position is OPEN to HRSG & CLOSED to DIVERTER DAMPER STACK).

8. Position of HRSG Blanking Plate (State of HRSG Blanking Plate position based on HRSG Blanking Plate 'open' and 'closed' limit switches which send digital input signals to the DCS control system) is correct (i.e., HRSG Blanking Plate Position is OPEN to HRSG)

The following HRSG interlock conditions initiate CT:

When the position of HRSG Diverter Damper Stack Damper is OPEN to HRSG and is CLOSED to DIVERTER DAMPER STACK and HRSG Blanking Plate Position is OPEN to HRSG, the following HRSG interlock conditions initiate CT :

1. HP Drum Level is LOW-LOW-LOW (i.e., ≤ -635 millimeter (- 25 in., ref. NWL)).
   REQUIRED RESPONSE: CT TRIP
2. HP Drum Level is LOW-LOW (i.e., ≤ -406.4 millimeter (- 16in., ref. NWL)).
   REQUIRED RESPONSE: RUNBACK CT
3. HP Drum Pressure is HIGH-HIGH-HIGH (i.e., ≥ 91.01barg (1320 psig)).
   REQUIRED RESPONSE: CT TRIP
4. HP Drum Pressure is HIGH-HIGH (i.e., ≥ 86.18 barg (1250 psig)).
   REQUIRED RESPONSE: RUNBACK CT
5. HP SH Outlet Pressure is HIGH-HIGH (i.e., ≥ 84.46 barg (1225 psig)).
   REQUIRED RESPONSE: RUNBACK CT
6. HP Steam Output Temperature is HIGH-HIGH-HIGH (i.e., ≥ 541.67 °C (1007 °F)).
   REQUIRED RESPONSE: CT TRIP
7. HP Steam Output Temperature is HIGH-HIGH (i.e., ≥ 538.89 °C (1002 °F)).
   REQUIRED RESPONSE: RUNBACK CT
8. LP Drum Level is LOW-LOW-LOW (i.e., ≤ -330.2 millimeter (- 13 in., ref. NWL)).
   REQUIRED RESPONSE: CT TRIP
9. LP Drum Level is LOW-LOW (i.e., ≤ -254 millimeter (- 10 in., ref. NWL)).
   REQUIRED RESPONSE: RUNBACK CT
10. LP Drum Pressure is HIGH-HIGH-HIGH (i.e., ≥ 13.44 barg (195 psig)).
    REQUIRED RESPONSE: CT TRIP
11. LP Drum Pressure is HIGH-HIGH (i.e., ≥ 10.34barg (150psig)).
    REQUIRED RESPONSE: RUNBACK CT
12. LP SH Outlet Pressure is HIGH-HIGH (i.e., ≥ 10.34barg (150 psig)).

REQUIRED RESPONSE: RUNBACK CT

13. HP Drum Level Overall Measurement Fault
    REQUIRED RESPONSE: CT TRIP
14. HP Output Steam Temperature Overall Measurement Fault
    REQUIRED RESPONSE: RUNBACK CT
15. LP Drum Level Overall Measurement Fault
    REQUIRED RESPONSE: CT TRIP
16. LP Drum Pressure Overall Measurement Fault
    REQUIRED RESPONSE: CT TRIP
17. HRSG Duct Exhaust Gas Pressure is HIGH HIGH (i.e., ≥ 622.3 millimeter. H_2O (24.5 in.H_2O)).
    REQUIRED RESPONSE: CT TRIP

If **<u>two gas turbines</u>** have been tripped, the following HRSG interlock conditions initiate ST trips:

1. HP Drum Level is HIGH-HIGH-HIGH (i.e., ≥ 177.8 millimeter (7 in., ref. NWL)).
   REQUIRED RESPONSE: STEAM TURBINE TRIP
2. LP Drum Level is HIGH-HIGH-HIGH (i.e., ≥ 177.8 millimeter (7 in., ref. NWL)).
   REQUIRED RESPONSE: STEAM TURBINE TRIP

The following HRSG operating conditions must be alarmed as required per NFPA 85:

1. HP Drum Level is LOW (i.e., ≤ -152.4 millimeter (- 6 in., ref. NWL)).
2. HP Drum Level is HIGH (i.e., ≥ 127 millimeter (5 in., ref. NWL)).
3. HP Drum Level is HIGH-HIGH (i.e., ≥ 152.4 millimeter (6 in., ref. NWL)).
4. HP Drum Pressure is HIGH (i.e., ≥ 82.737 barg (1200 psig)).
5. HP SH Outlet Steam Pressure is HIGH (i.e., ≥ 82.048 barg (1190 psig)).
6. LP SH Outlet Steam Pressure is HIGH (i.e., ≥ 8.274barg (120psig)).
7. HP Steam Output Temperature is HIGH (i.e., ≥ 533.33 °C (992 °F)).
8. LP Drum Level is LOW (i.e., ≤ -152.4 millimeter (-6 in., ref. NWL)).
9. LP Drum Level is HIGH (i.e., ≥ 127 millimeter (5 in., ref. NWL)).
10. LP Drum Level is HIGH-HIGH (i.e., ≥ 152.4 millimeter (6 in., ref. NWL)).
11. LP Drum Pressure is HIGH (i.e., ≥ (i.e., ≥ 8.963 barg (130psig)).
12. HRSG Duct Exhaust Gas Pressure is HIGH (i.e., ≥ 584.2 millimeter. H_2O (23 in.H_2O)).
13. LP Steam Output Temperature is HIGH-HIGH-HIGH (i.e.,≥ 260.56 °C (501°F)).

14. LP Steam Output Temperature is HIGH-HIGH (i.e., ≥ 257.78 °C (496°F)).
15. LP Steam Output Temperature is HIGH (i.e., ≥ 252.22°C (486°F)).
16. The Temp Difference Between HPSH1 Module and HPSH2 Module Outlet High (i.e., ≥ 66.7°C (120°F)).

The following HRSG signals shall be continuously monitored and available for display at the Operator Interface Machine (by others) per NFPA 85:

1. HP Drum Level
2. HP Drum Pressure
3. LP Drum Level
4. LP Drum Pressure
5. HRSG Duct Exhaust Gas Pressure
6. HRSG Duct Outlet Gas Temperature (average temperature measurement and individual temperature measurements of four Duct Outlet Gas thermocouples, HNA11CT001 thru HNA11CT004 which send 4-20 mA signals to the DCS).

Additionally:

1. HRSG Stack Outlet Gas Temperature (average temperature measurement and individual temperature measurements of two HRSG Stack Outlet Gas thermocouples, HNE10CT001 & HNE10CT002, which send 4-20 mA signals to the DCS).

2.0 HP DRUM LEVEL CONTROL

2.1 HP drum level is controlled by two process control loops depending on the operation of the HRSG unit. A single element feedback loop controller is used to control drum level at setpoint during startup operation when the HP SH steam flow rate is less than or equal to 30% of the full load steam flow rate. A three element, feedforward/feedback drum level control loop is used during normal operation when the steam flow rate is greater than 30% of the full load flow rate. The HP Drum level is controlled by modulating HP Drum level control valves, LAB10AA201, which regulate the flow of HP feedwater into the HP Drum. HP drum level and HP main steam flow measurements in the HP drum level control loop are density compensated to account for the effect of fluid density on the measurements. Density or specific volume is determined as a function of the HP drum saturation steam pressure measurement and the HP superheated steam flow temperature and pressure measurements.

2.2 Three level transmitters, HAD10CL001, HAD10CL002 & HAD10CL003, measure HP drum level. Each HP drum level transmitter is calibrated using an elevated zero so that an increasing drum level measurement is directly proportional to an increasing 4-20 mA signal. The HP drum level transmitter measurements are compared in the DCS control system logic and a two of three auctioneering logic is used in the control system logic. A **4%** difference in drum level between any drum level transmitter measurements will cause a deviation alarm for the level transmitter that exceeds the tolerance. Upon comparison of the compensated drum level measurements, if none of the measurement comparisons are within the specified tolerance, the CT are tripped and an overall measurement fault alarm is raised. A single, average value of HP Drum level is used to determine the density compensated HP drum level in the DCS control system logic.

2.3 In the single element HP drum level control loop, a proportional-integral (PI) feedback controller compares the HP drum level to the setpoint. The drum level controller outputs a 0-100% value to the HP feedwater control valve, LAB10AA201, to maintain the HP drum level at its setpoint.

2.4 In the three element HP drum level control loop, a proportional-integral (PI) feedback controller compares the HP drum level to the setpoint. The HP drum level feedback controller output is summed with the HP feedwater flow feedforward signal that is the value of the HP SH main steam flow minus the HP attemperator spraywater flow and plus fuel gas preheater flow. The result is the HP feedwater flow demand setpoint to the HP feedwater flow controller. The HP attemperator spraywater flow is density compensated by HP attemperator spraywater temperature measurement LAE10CT001. The HP feedwater flow controller is a proportional-integral (PI) feedback controller.The HP feedwater flow

controller compares the feed water flowrate to the setpoint and outputs a 0-100% value to the HP feedwater control valve, LAB10AA201 to maintain the HP feedwater flow at its setpoint.

2.5 HP drum level is density compensated by measuring first the HP drum saturation pressure. Two pressure transmitters, HAD10CP001& HAD10CP002, measure HP drum pressure. The HP drum pressure transmitter measurements are compared in the DCS control system logic. A **5%** difference in drum pressure between two drum pressure transmitter measurements will cause an overall measurement fault alarm and set the design pressure. The average HP drum level measurement must be compensated due to density differences between the HP drum water and water in the level transmitter cold measurement leg (See Appendix A. 'Density Compensated Steam Drum Level Equations'). An average value of HP drum pressure is used to determine the liquid water and water vapor densities from ASME Steam Table correlations.

2.6 HP main steam flow is measured by flow transmitter (By other). HP main steam flow is the feedforward signal to determine the HP feedwater flow demand setpoint in the three element HP drum level control loop. The HP main steam flow is density compensated by HP main steam pressure and temperature measurement. The HP main steam pressure is measured by pressure transmitter, HAH10CP002. The HP main steam temperature is measured by thermocouples, HAH10CT003 & HAH10CT004. If the HP main steam flow transmitter is failure in three element control mode, three element control mode is switched to single element control mode automatically.

2.7 The HP inter-stage attemperator spraywater flow is measured by flow transmitter, LAE10CF001. The HP inter-stage attemperator spraywater flow measurement is density compensated using downstream HP inter-stage attemperator spraywater temperature, LAE10CT001.

2.8 The HP feedwater flow is measured by flow transmitters, LAB31CF002 for HRSG1 and LAB32CF002 for HRSG2, which sends a 4-20 mA signal of the flow to the DCS. The HP feedwater flow measurement is the feedback control signal to the HP feedwater flow controller. The HP feedwater flow measurement is density compensated using the downstream HP feedwater temperature measurement, LAB10CT001, which sends a Type E thermocouple input signal to the DCS. If HP feedwater flow transmitter is failure in three element control mode, three element control mode is switched to single element control mode automatically.

2.9 During startup operation when steam production to the condenser through the HP bypass system is low and the steam flow measurement is not accurate, drum level is controlled by a single element feedback controller specifically tuned for startup conditions. Also, the drum swell will occur as steam is produced and the density of the drum water decreases. Upon startup the level in the drum should be lowered to the startup drum level using the HP intermittent blowdown (IBD) valve, HAD10AA102. As the drum level continues to rise during startup, the drum level controller setpoint is calculated by HP drum pressure. When the drum level equals Normal Water Level (NWL), the drum level setpoint is set equal to NWL and held constant. As the drum level continues to increase, the HP IBD valve, HAD10AA102 is opened when the level reaches High Level and is closed when the drum level is slightly above NWL. If the CT trips, after the drum level setpoint has been set equal to NWL, the sequence is reset if the actual drum level decreases below NWL upon cooling and before the CT is restarted. The single element feedback drum level controller automatically starts to control drum level at NWL, when the drum level decreases below NWL. At the end of the startup period, steam flow through the bypass system or to the steam turbine increases. When the normal, minimum load steam flow rate or the maximum startup feedwater flow rate is measured, the HP IBD valves are closed and drum level control is switched to three element control.

2.10 During normal operation, the HRSG is operated under variable pressure conditions over the load range, i.e., sliding pressure operating conditions. HRSG load changes equate to changes in the HP, and LP evaporators' heat inputs and their corresponding steam productions. Change in the CT load demands directly influence normal load steam productions and boiler drum pressures. Transient HRSG upset operating conditions other than MW load changes could also directly influence the HP, and LP steam productions and boiler drum pressures. Upon any MW load change or boiler upset condition, the magnitude of the drum level setpoint deviations and the impact on the individual drum level control loops depend on how rapidly the respective steam productions and boiler drum pressures are varied.

2.11 For example, when the megawatt load demand is decreased, the CT firing rate is decreased and the HP steam production decreases. As less steam is produced, less steam bubbles in the boiler drum and evaporator loop are created, the specific volume of the steam-water mixture decreases, and, consequently, the boiler drum level decreases or shrinks. As another example, when a process upset condition other than a load change causes the steam pressure to increase, the steam production decreases due to higher energy requirements at the corresponding higher steam saturation temperature. As the drum pressure increases, the steam bubbles in the boiler drum and evaporator loop contract, the specific volume of the steam-water mixture decreases, and consequently, the drum level shrinks. When a load change or a process upset condition occur that results in less steam

production, the three element drum level feed forward controls respond by decreasing the feedwater flow in order to equal steam flow and maintain drum level. However, depending on how quickly the load change or process upset condition occur, the effects on drum level of less steam production or an increasing drum pressure may cause the drum level feedback controller to overcorrect or offset the feedforward control. This can lead to sluggish or to unstable control of drum level.

2.12 Conversely, when the megawatt load demand is increased, the CT firing rate is increased and the HP steam production increases. As more steam is produced, more steam bubbles in the boiler drum and evaporator loop are created, the specific volume of the steam-water mixture increases, and, consequently, the drum level rises or swells. As another example, when a process upset condition other than a load change causes the steam pressure to decrease, the steam production increases due to lower energy requirements at the corresponding lower steam saturation temperature. As the drum pressure decreases, the steam bubbles in the boiler drum and evaporator loop expand, the specific volume of the steam-water mixture increases, and, consequently, the drum level swells. When a load change or a process upset condition occur that results in more steam production, the three element drum level feedforward controls respond by increasing the feedwater flow in order to equal steam flow and maintain drum level. Again, however, depending on how quickly the load change or process upset condition occur, the effects on drum level of more steam production or a decreasing drum pressure may also cause the drum level feedback controller to overcorrect or offset the feedforward control and lead to sluggish or unstable drum level control.

2.13 The conditions for shrink or swell can be monitored and corresponding adjustments to one or all of the control parameters can be made, when a shrink or swell condition occur. Shrink occurs when steam flow is decreasing and drum level is decreasing or when steam flow is decreasing and drum pressure is increasing. Swell occurs when steam flow is increasing and drum level is increasing or when steam flow is increasing and drum pressure is decreasing. The integral (I) constant of the boiler drum level PI feedback controller is set equal to zero when a shrink or swell condition occurs. Accordingly, the drum level feedback control action will not seriously overcorrect or offset the feedforward control action to match the feedwater and steam flows and maintain drum level. The integral constant is reset to its original value when the steam flow is nearly constant. The controllability of the drum level control loop is therefore improved.

2.14 During shutdown operation, the CT turbine load is shed in a controlled manner. The three element level controller can be employed throughout the shutdown period. As drum pressure is reduced, normal

drum level control can be used including the operation of the HP IBD valve to prevent a high level trip of the unit.

3.0 LP DRUM LEVEL CONTROL

3.1 LP drum level is controlled by two process control loops depending on the operation of the HRSG unit. A single element feedback loop controller is used to control drum level at setpoint during startup operation when the LP SH steam flow rate is less than or equal to 30% of the full load steam flow rate. A three element, feedforward/feedback drum level control loop is used during normal operation when the steam flow rate is greater than 30% of the full load flow rate. The LP Drum level is controlled by modulating LP Drum level control valve, HAC50AA201, which regulates the flow of LP feedwater into the LP Drum. The LP drum level and LP main steam flow measurements in the LP drum level control loop are density compensated to account for the effect of fluid density on the measurements. Density or specific volume is determined as a function of the LP drum saturation steam pressure measurement and the LP superheated steam flow temperature and pressure measurements.

3.2 In the single element LP drum level control loop, a proportional-integral (PI) feedback controller compares the LP drum level to the setpoint. The drum level controller outputs a 0-100% value to the LP feedwater control valve, HAC50AA201, to maintain the LP drum level at its setpoint.

3.3 Three level transmitters, HAD50CL001, HAD50CL002 & HAD50CL003, measure LP drum level. Each LP drum level transmitter is calibrated using an elevated zero so that an increasing drum level measurement is directly proportional to an increasing 4-20 mA signal. The LP drum level transmitter measurements are compared in the DCS control system logic and a two of three auctioneering logic is used in the control system logic. A **4%** difference in drum level between any drum level transmitter measurements will cause a deviation alarm for the level transmitter that exceeds the tolerance. Upon comparison of the raw level measurements, if none of the measurement comparisons are within the specified tolerance, the CT are tripped and an overall measurement fault alarm is raised. A single, average value of LP Drum level is used to determine the density compensated LP drum level in the DCS control system logic.

3.4 In the three element LP drum level control loop, a proportional-integral (PI) feedback controller compares the LP drum level to the setpoint. The LP drum level feedback controller output is summed with the feedforward signal which is the value of the LP main steam flow measurement plus storage tank inlet flow measurement LAA10CF001 that is density compensated by the temperature measurement HAC50CT001. The result is the LP feedwater flow demand setpoint to the LP feedwater

flow controller. The LP feedwater flow controller is a proportional-integral (PI) feedback controller. The LP feedwater flow controller compares the LP feed water flowrate to the setpoint and outputs a 0-100% value to the LP feedwater control valve, HAC50AA201, to maintain the LP feedwater flow at its setpoint.

3.5 LP drum level is density compensated by measuring first the LP drum saturation pressure. Two pressure transmitters, HAD50CP001 & HAD50CP002, measure LP drum pressure. The LP drum pressure transmitter measurements are compared in the DCS control system logic. A **5%** difference in drum pressure between two drum pressure transmitter measurements will cause an overall measurement fault alarm and the CT is tripped. The average LP drum level measurement must be compensated due to density differences between the LP drum water and water in the level transmitter cold measurement leg (See Appendix A. 'Density Compensated Steam Drum Level Equations'). An average value of LP drum pressure is used to determine the liquid water and water vapor densities from ASME Steam Table correlations.

3.6 LP main steam flow is measured by flow transmitter (By other). It is used as a feedforward signal to determine the LP feedwater flow demand setpoint in the three element LP drum level control loop. LP main steam flow is density compensated by LP main steam pressure measurement and temperature measurement. The LP main steam pressure is measured by a pressure transmitter, HAH50CP001. The LP main steam temperature is measured by a thermocouple, HAH50CT001. If the LP main steam flow transmitter is failure in three element control mode, the operator should switch LP feedwater control system from automatic mode to manual mode.

3.7 The LP feedwater flow is measured by flow transmitter LAB50CF001. The LP feedwater flow measurement is the feedback control signal to the LP feedwater flow controller. The LP feedwater flow measurement is density compensated by the downstream LP feedwater temperature measurement LAB50CT001. If the LP feedwater flow transmitter is failure in three element control mode, the operator should switch LP feedwater control system from automatic mode to manual mode.

3.8 During startup operation, when steam production to the condenser through the LP bypass system is low and the steam flow measurement is not accurate, drum level is controlled by a single element feedback controller specifically tuned for startup conditions. Also, drum swell will occur as steam is produced and the density of the drum water decreases. Upon startup the level in the drum should be lowered to the startup drum level using the LP intermittent blowdown (IBD) valve, HAD50AA102. As the drum level continues to rise during startup, the drum level controller setpoint is set equal to the actual drum level. When the drum level equals Normal Water Level (NWL), the drum level setpoint is set equal to NWL

and held constant. As the drum level continues to increase, the IBD valve, HAD50AA102 is opened when the level reaches High High Level and is closed when the drum level is slightly above NWL. If the CT trips, after the drum level setpoint has been set equal to NWL, the sequence is reset if the actual drum level decreases below NWL upon cooling and before the CT is restarted. The single element feedback drum level controller automatically starts to control drum level at NWL when the drum level decreases below NWL. At the end of the startup period steam flow through the bypass system or to the steam turbine increases. When the normal, minimum load steam flow rate or the maximum startup feedwater flow rate is measured, the LP IBD valves are closed and drum level control is switched to three element control.

3.9 During normal operation the HRSG is operated under variable pressure conditions over the load range, i.e., sliding pressure operating conditions. HRSG load changes equate to changes in the HP and LP evaporators' heat inputs and their corresponding steam productions. Change in the CT load demands directly influence normal load steam productions and boiler drum pressures. Transient HRSG upset operating conditions other than MW load changes could also directly influence the HP and LP steam productions and boiler drum pressures. Upon any MW load change or boiler upset condition, the magnitude of the drum level setpoint deviations and the impact on the individual drum level control loops depend on how rapidly the respective steam productions and boiler drum pressures are varied.

3.10 For example, when the megawatt load demand is increased, the CT firing rate is increased and typically the LP steam production decreases. As less steam is produced, less steam bubbles in the boiler drum and evaporator loop are created, the specific volume of the steam-water mixture decreases, and consequently, the boiler drum level decreases or shrinks. As another example, when a process upset condition other than a load change causes the steam pressure to increase, the steam production decreases due to higher energy requirements at the corresponding higher steam saturation temperature. As the drum pressure increases, the steam bubbles in the boiler drum and evaporator loop contract, the specific volume of the steam-water mixture decreases, and, consequently, the drum level shrinks. When a load change or a process upset condition occur that results in less steam production, the three element drum level feed forward controls respond by decreasing the feedwater flow in order to equal steam flow and maintain drum level. However, depending on how quickly the load change or process upset condition occur, the effects on drum level of less steam production or an increasing drum pressure may cause the drum level feedback controller to overcorrect or offset the feedforward control. This can lead to sluggish or to unstable control of drum level.

3.11 Conversely, when the megawatt load demand is decreased, the CT firing rate is decreased and the LP steam production increases. As more steam is produced, more steam bubbles in the boiler drum and evaporator loop are created, the specific volume of the steam-water mixture increases, and, consequently, the drum level rises or swells. As another example, when a process upset condition other than a load change causes the steam pressure to decrease, the steam production increases due to lower energy requirements at the corresponding lower steam saturation temperature. As the drum pressure decreases, the steam bubbles in the boiler drum and evaporator loop expand, the specific volume of the steam-water mixture increases, and, consequently, the drum level swells. When a load change or a process upset condition occur that results in more steam production, the three element drum level feedforward controls respond by increasing the feedwater flow in order to equal steam flow and maintain drum level. Again, however, depending on how quickly the load change or process upset condition occur, the effects on drum level of more steam production or a decreasing drum pressure may also cause the drum level feedback controller to overcorrect or offset the feedforward control and lead to sluggish or unstable drum level control.

3.12 The conditions for shrink or swell can be monitored and corresponding adjustments to one or all of the control parameters can be made, when a shrink or swell condition occur. Shrink occurs when steam flow is decreasing and drum level is decreasing or when steam flow is decreasing and drum pressure is increasing. Swell occurs when steam flow is increasing and drum level is increasing or when steam flow is increasing and drum pressure is decreasing. The integral (I) constant of the boiler drum level PI feedback controller is set equal to zero when a shrink or swell condition occurs. Accordingly, the drum level feedback control action will not seriously overcorrect or offset the feedforward control action to match the feedwater and steam flows and maintain drum level. The integral constant is reset to its original value when the steam flow is nearly constant. The controllability of the drum level control loop is therefore improved.

3.13 During shutdown operation, the CT turbine load is shed in a controlled manner. The three element level controller can be employed throughout the shutdown period. As drum pressure is reduced, normal drum level control can be used including the operation of the IBD valves to prevent a high level trip of the unit.

4.0 HP DRUM LEVEL REMOTE LEVEL INDICATION PER ASME BOILER CODE

Per the ASME Boiler Code, in addition to the average HP drum level measurement determined in DCS Controller, at least one other independent, remote means of level indication must be provided. The HP

drum Remote level indicator, HAD10CL003, is wired to the HP Drum Remote Level Indicator, HAD10CL502 & HAD10CL503 that are located at grade and at control room. One level gauge, HAD10CL501, is supplied at each end of the HP drum. The level gauges are installed in a water column connected to the HP drum.

5.0 LP DRUM LEVEL REMOTE LEVEL INDICATION PER ASME BOILER CODE

Per the ASME Boiler Code, in addition to the average LP drum level measurement determined in DCS Controller, at least one other independent, remote means of level indication must be provided. The LP drum Remote level indicator, HAD50CL003, is wired to the LP Drum Remote Level Indicator, HAD50CL502 & HAD50CL503 that are located at grade and at control room. One level gauge, HAD50CL501, is supplied at each end of the LP drum. The level gauges are installed in a water column connected to the LP drum.

6.0 HP SUPERHEATER MAIN STEAM TEMPERATURE CONTROL

6.1 An inter-stage attemperator is used to control the HP main steam outlet temperature from the HRSG. The HP superheater inter-stage attemperator control will modulate water spray flow as required to control the HP steam terminal point temperature 528°C (982°F). During startup and loading, while at minimum IGV angle position, the solenoid operated spray water block valve, LAE10AA101, is set auto status. The spray water block valve is opened when the spray water control valve's open demand signal is greater than 5% and the HP SH steam outlet temperature difference value between the HP SH steam outlet temperature measurement value and the HP SH steam outlet temperature setpoint value is less than 13 °C. As the CT load and exhaust gas temperature are increased, the HP superheater outlet temperature rises to its control temperature. Further load increases causes the spray water temperature controller demand to increase and the spray water control valve is modulated to control superheater outlet temperature. On falling spray water demand, the spray water control valve is modulated to control superheater outlet temperature. If the spray water control valve temperature controller open demand signal is less than 4%, the spray water control valve is closed. When the spray water control valve is closed, the spray water block valve is closed after a 10 sec time delay.

6.2 The HP main steam outlet temperature is controlled by two cascaded temperature control loops. The HP main steam outlet temperature is the controlled variable of the primary loop controller with its temperature setpoint determined by design. HP main steam temperature is measured by two thermocouples, HAH10CT003 & HAH10CT004. Two measurements are compared. A ten 5.55 °C (10 °F) temperature difference between two main steam temperature measurements will cause a deviation

alarm for the thermocouple that exceeds the tolerance. The average HP main steam temperature is then used as the process variable in the primary HP main steam temperature control loop.

6.3 If the average HP main steam temperature is greater than the setpoint temperature by 5.55 °C (10 °F) for 15 seconds, a HP main steam temperature high alarm signal is raised. If the average HP main steam temperature reaches a value greater than the setpoint temperature by 11.11 °C (20 °F) for 10 seconds the operator will decide if the CT need run back to a lower load. If the average HP main steam temperature reaches a value greater than the setpoint temperature by 13.89 °C (25 °F) for 5 seconds, the HRSG is then also tripped.

6.4 The output from the primary controller is the setpoint for the secondary controller. The slave controller compares the setpoint from the primary controller output to the HP inter-stage attemperator outlet steam temperature measured by one thermocouple, HAH10CT002. The secondary controller outputs a 0-100% value to the HP inter-stage attemperator spraywater control valve HAH10AC001. The HP inter-stage attemperator spraywater control valve is modulated to control the flow of spraywater to the HP inter-stage attemperator. The HP inter-stage spraywater flow is controlled to vary the HP inter-stage attemperator outlet steam temperature in order to maintain the HP main steam outlet temperature at its setpoint. Cascading the control loops in this manner minimizes the effects of process disturbances that would upset the inter-stage spraywater attemperation thus preventing these disturbances from influencing the HP main steam outlet temperature.

6.5 The HP inter-stage attemperator outlet steam temperature setpoint is low limited to a minimum of 27.78 °C (50 °F) above the steam saturation temperature (Tsat) in order to prevent steam condensation in the steam attemperator piping. If the primary controller output, which is the secondary controller setpoint, is less than Tsat plus 27.78 °C (50 °F), the secondary controller setpoint is set equal to Tsat plus 27.78 °C (50 °F). The secondary controller will then control the HP inter-stage attemperator outlet steam temperature to Tsat plus 27.78 °C (50 °F) to prevent steam condensation in the attemperator piping. The HP inter-stage attemperator header pressure is measured by the HP inter-stage attemperator inlet pressure transmitter, HAH10CP001. The HP inter-stage attemperator outlet saturation temperature is then determined as a function of the HP inter-stage attemperator outlet pressure. The sum of the HP inter-stage attemperator inlet saturation temperature and 27.78 °C (50 °F) is then used in a low limiting function block to determine the low limit of the setpoint of the secondary controller.

7.0 HP SH STEAM STARTUP VENT CONTROL

7.1 The HP SH steam startup vent control valve (SUV), HAH10AA201, is used during HRSG cold, warm or hot startup operation to control the rate of temperature increase or temperature ramp rate in the HP drum based on the HP drum saturation pressure measurement. During any startup period the HP drum temperature ramp rate must be controlled to 11.11 °C (20 °F) per minute by venting steam through the HP SH SUV valve or by modulating the HP SH Steam Bypass valve. All startup periods are defined from zero CTG load until the desired HP SH steam outlet pressure is reached. For any startup operation the HP SH SUV valve is in the closed position when the CTG is started.

7.2 When the HRSG operating permissives are met and CT is ignited, low position limiter is set to 10% open to ensure steam flow through SH tube to avoid excess heat up at SH tube with no flow. When the HP drum pressure equals 1.034barg (15 psig), the HP SH steam SUV is placed in automatic. The HP SH steam SUV valve is then automatically modulated to control the HP drum temperature ramp rate.

7.3 Specifically, two pressure transmitters, HAD10CP001 & HAD10CP002, measure HP drum pressure. Each HP drum pressure transmitter sends a 4-20 mA signal to the DCS, which are then compared to one another. A 5% difference in drum pressure measurement between two the drum pressure transmitters will cause an overall measurement fault alarm and the CT is tripped. The average HP drum pressure is then used by the DCS for control purposes.

7.4 The HP Drum temperature ramp rate is calculated using the average HP Drum steam saturation pressure. The HP Drum temperature ramp rate is determined by multiplying the change of the HP Drum saturation pressure with respect to time by the 1st derivative of the equation of HP Drum steam saturation temperature as a function of the HP Drum steam saturation pressure. The HP Drum temperature ramp rate is the process variable for the 'HP Drum Temperature Ramp Rate' controller.

7.5 The HP drum temperature ramp rate proportional-integral (PI) controller compares the HP drum temperature ramp rate to the setpoint of 20˚F/min. The HP drum temperature ramp rate controller then outputs a 0-100% signal to the HP SH steam SUV valve to position the valve and control the HP drum temperature ramp rate at its setpoint.

7.6 When the HP SH steam outlet pressure measured by pressure transmitter, HAH10CP002, has reached setpoint pressure 12.8 bara, the automatic control of the HP drum temperature rate controller is switched to the HP SH steam outlet pressure controller. The HP SH steam outlet pressure controller is a proportional-integral (PI) controller and compares the HP SH steam outlet pressure to the HP SH steam

outlet pressure setpoint 12.8 bara. The HP SH steam outlet pressure controller then outputs a 0-100% signal to the HP SH steam SUV valve to position the valve accordingly. When the HP SH steam outlet pressure has reached setpoint pressure 12.8 bara and the HP steam turbine bypass control valve is available and the plant condenser is on line, The HP SH steam outlet pressure controller is switched to the HP steam turbine bypass temperature ramp rate controller that continues to control HP drum temperature ramp rate to setpoint (20 ˚F/min). Then the HP SH steam SUV valve is stepped down automatically to its fully closed position as the control rate of HP drum temperature increase is controlled by the HP steam turbine bypass temperature ramp rate controller.

8.0 CONTROL OF HP BYPASS FOR HP DRUM TEMPERATURE RAMP RATE

8.1 The HP SH steam startup bypass control valve is used during HRSG cold, warm, or hot startup operation to control the rate of temperature increase or temperature ramp rate and HP drum pressure. During cold, warm and hot startup period(s), the HP drum temperature ramp rate must be limited to 20˚F/min, by bypass control valve. For cold, warm and hot start up periods are defined from zero CTG load until the desired HP drum pressure 80.724barg (1170.8 psig) is reached.

8.2 When the HP SH steam outlet pressure is greater than 12.8 bara and the HP steam turbine bypass control valve is available and the plant condenser is on line, the HP drum temperature ramp rate controller is switched to the HP steam turbine bypass temperature ramp rate controller. The HP Drum temperature ramp rate proportional-integral (PI) controller compares the HP drum temperature ramp rate to the setpoint. The HP drum temperature ramp rate controller then outputs a 0-100% signal to the HP SH steam turbine bypass control valve until the HP steam outlet pressure reaches the HP steam turbine rotation pressure (38 barg).

8.3 When the HP steam outlet pressure reaches the HP steam turbine rotation pressure(38 barg), the HP drum temperature ramp rate controller is transferred to the HP steam outlet pressure controller. The HP steam outlet pressure proportional-integral (PI) controller compares the HP steam outlet pressure to the HP steam turbine rotation pressure setpoint and gives out a 0-100% control signal to the HP steam turbine bypass control valve until the steam turbine speed reaches ~3000 rpm.

8.4 After the steam turbine rotation reaches ~3000 rpm and until the steam turbine generator mode reaches IPC mode, the HP steam turbine bypass control valve is controlled by 2 controllers: the HP steam out pressure ramp rate controller and the HP drum temperature ramp rate controller. The HP steam out pressure ramp rate controller is a proportional-integral (PI) controller that compares the HP steam out

pressure ramp rate to the setpoint. The signals from these two controllers are compared in a compare function block and the greater of the 2 signals is given out as a 0-100% signal to the HP steam turbine bypass control valve. When ST HP control valve start inlet pressure control, the HP bypass control valve is closed and set point is set to actual pressure plus 3 barg. One the ST HP control valve is fully opened, sliding pressure control will be applied.

8.5 Specifically, two pressure transmitters, HAD10CP001 & HAD10CP002, measure HP drum pressure. Each HP drum pressure transmitter sends a 4-20 mA signal to the DCS, which are then compared to one another. A 5% difference in drum pressure measurement between two the drum pressure transmitters will cause an overall measurement fault alarm and the HP Drum temperature ramp rate proportional-integral (PI) controller and the HP SH steam outlet pressure proportional-integral (PI) controller are switched from auto mode to manual mode. The average HP drum pressure is then used by the DCS for control purposes.

8.6 The HP Drum temperature ramp rate is calculated using the average HP Drum steam saturation pressure. The HP Drum temperature ramp rate is determined by multiplying the change of the HP Drum saturation pressure with respect to time by the 1st derivative of the equation of HP Drum steam saturation temperature as a function of the HP Drum steam saturation pressure. The HP Drum temperature ramp rate is the process variable for the 'HP Drum Temperature Ramp Rate' controller.

9.0 DIVERT DAMPER CONTROL

9.1 The HRSG Divert Damper located in the HRSG inlet duct. The Divert Damper allows CT exhaust gas into the HRSG in fixed increments while the HP SH SUV valve is modulated to raise pressure. Both controlled operations are designed to limit thermal stresses in the HRSG.

9.2 The Divert Damper blade is positioned automatically based on timed sequence of operation to coincide approximately with the rate of heat absorption required to raise HP Drum pressure to be defined pressure levels over a given time period. The diverter damper blade is motor driven and a position transmitter is used to proportion flow between the HRSG and the divert stack.

9.3 When gas turbine is on and HRSG is started, the Diverter Damper needs to be opened gradually by timer control. The Diverter Damper position intermediate positions are 30%, 50%, 60%, 70%, 80% and 100% and time period are 10 min, 10 min, 10 min, 10 min, 10 min, 5 min.

10.0 LP SH STEAM START UP VENT CONTROL

10.1 When the HRSG operating permissives are met and the unit is starting to heat up, the LP SH steam startup vent (SUV) valve, HAH50AA201, is opened manually to its minimum position to vent noncondensibles to atmosphere. When the LP drum pressure is reached 1.034barg (15 psig), the LP SH steam outlet pressure controller and the LP SH steam outlet pressure ramp rate controller are placed in automatic.

10.2 The LP SH steam outlet pressure ramp rate controller is a proportional-integral (PI) controller, which compares the LP SH steam outlet pressure ramp rate to the normal LP SH steam outlet pressure ramp rate setpoint 1.37895 barg (20 psig) per minute. The LP SH steam outlet pressure controller is a proportional-integral (PI) controller, which compares the LP SH steam outlet pressure, measured by pressure transmitter HAH50CP001, to the normal LP SH steam outlet pressure setpoint. When the LP SH steam outlet pressure is lesser than 2.03395 barg (29.5 psig), the LP SH steam outlet pressure ramp rate controller is used to control the LP SH steam outlet pressure ramp rate at its setpoint and outputs a 0-100% signal to the LP SH steam SUV valve, HAH50AA201 until the LP SH steam outlet pressure is reached 2.03395 barg (29.5 psig). Then, the LP SH steam outlet pressure ramp rate controller is switched to the LP SH steam outlet pressure controller. The LP SH steam outlet pressure controller compares the LP SH steam outlet pressure to the normal LP SH steam outlet pressure setpoint 2.0684 barg (30 psig) and outputs a 0-100% signal to the LP SH steam SUV valve, HAH50AA201, to maintain the steam outlet pressure at its setpoint.

10.3 The LP SH steam SUV valve continues to maintain the LP SH steam outlet pressure at the normal operating pressure 2.0684 barg (30 psig) until the LP SH steam bypass control valve is available and the plant condenser is on line. The LP steam SUV valves tied to the LP SH steam outlet pressure controller and the LP SH steam outlet pressure ramp rate controller are placed in manual. Then the LP SH steam SUV valve is stepped down manually to its fully closed position.

11.0 HP CONTINUOUS BLOWDOWN (CBD) VALVE CONTROL

The HP Drum continuous blowdown (CBD) valve, HAD10AA201, is a pneumatically actuated valve with a 4-20mA position transmitter and with open & closed limit switches. The HP CBD valve is automatically controlled by the DCS or manually controlled by the Operator through the Operator Interface Machine. The HP CBD control valve, HAD10AA201, regulates the continuous blowdown flowrate to the blowdown tank in order to maintain the HP Drum suspended solids' concentration below a given level. Typically

the concentration of suspended solids in the drum water is measured by the electrical conductivity of the drum water. According to EPRI guidelines for boiler drum water quality under normal operating limits at the HP drum operating pressures, the recommended direct conductivity is less than (TBD) µS/cm. The electrical conductivity of the boiler drum water is measured to determine its suspended solids' concentration level. In automatic operation, the boiler water conductivity measurement (by others) is compared to its setpoint and a 0-100% value from the DCS is sent to the CBD valve's positioner. The CBD valves are modulated to regulate the continuous blowdown flow rate from the HP Drum and control the boiler drum water conductivity at its setpoint.

12.0 LP CONTINUOUS BLOWDOWN (CBD) VALVE CONTROL

The LP Drum continuous blowdown (CBD) valve, HAD50AA201, is a pneumatically actuated valve with a 4-20mA position transmitter and with open & closed limit switches. The LP CBD valve is automatically controlled by the DCS or manually controlled by the Operator through the Operator Interface Machine. The LP CBD control valve, HAD50AA201, regulates the continuous blowdown flowrate to the blowdown tank in order to maintain the LP Drum suspended solids' concentration below a given level. Typically the concentration of suspended solids in the drum water is measured by the electrical conductivity of the drum water. According to EPRI guidelines for boiler drum water quality under normal operating limits at the LP drum operating pressures, the recommended direct conductivity is less than (TBD) µS/cm. The electrical conductivity of the boiler drum water is measured to determine its suspended solids' concentration level. In automatic operation, the boiler water conductivity measurement (by others) is compared to its setpoint and a 0-100% value from the DCS is sent to the CBD valve's positioner. The CBD valves are modulated to regulate the continuous blowdown flow rate from the LP Drum and control the boiler drum water conductivity at its setpoint.

13.0 BLOWDOWN TANK TEMPERATURE CONTROL

The blowdown tank temperature proportional-integral (PI) feedback controller compares the blowdown tank temperature measured by a thermocouple LCQ10CT001 to the blowdown tank temperature setpoint 60 °C (140 °F) and outputs a 0-100% value to the cooling water control valve LCQ10AA201.

14.0 EXTERNAL DEAERATOR PRESSURE CONTROL

14.1 The external deaerator pressure is measured by a pressure transmitter, LAA11CP001. The external deaerator pressure needs to be controlled by control valves, LAA10AA202, LAA10AA201 (Boiler #1) & LAA10AA201 (Boiler #2).

14.2 The external deaerator pressure controller is a proportional-integral (PI) controller that compares the external deaerator pressure to the setpoint 1.199688 bara (17.4psia) and outputs a 0-100% signal to the control valves LAA10AA202, LAA10AA201 (Boiler #1) & LAA10AA201 (Boiler #2).

14.3 When the LP economizer to external deaerator feedwater temperature measured by one thermocouple, HAC50CT001, is greater than the corresponding steam saturation temperature 104.78 °C (220.6°F) of the deaerator pressure 1.199688 bara (17.4 psia), the pressure control valves LAA10AA201 (Boiler #1) & LAA10AA201 (Boiler #2) from the LP economizer to external deaerator are permitted to open. When the Lp steam temperature measured by thermocouples, (By Others), is greater than the corresponding steam saturation temperature 104.78 °C (220.6 °F) of the deaerator pressure 1.199688 bara (17.4 psia) and the Lp steam pressure (absolute pressure) measured by a pressure transmitter (By Others), is greater than the deaerator pressure 1.199688 bara (17.4 psia), the pressure control valve LAA10AA202, from Lp steam to external deaerator are permitted to open. During start up, if the feedwater temperature from LP economizer to external deaerator or the steam temperature and pressure from LP steam are not met required temperature and pressure, the external deaerator pressure proportional-integral (PI) controller compares the external deaerator pressure to the setpoint pressure 1.199688 bara (17.4 psia) and outputs a 0-100% signal to the control valve (By Other) that controls the auxiliary steam to deaerator until LP ECON or steam from LP temperature and pressure are met.

15.0 EXTERNAL DEAERATOR LEVEL CONTROL

15.1 Three level transmitters, LAA10CL001 & LAA10CL002 measure the external deaerator level. The external deaerator level transmitters are calibrated using an elevated zero so that an increasing drum level measurement is directly proportional to an increasing 4-20 mA signal. The external deaerator level is density compensated by measuring first the external deaerator saturation pressure. One pressure transmitter, LAA11CP001, is used to measure the external deaerator pressure. The external deaerator level transmitter measurements are compared in the DCS control system logic and a average calculation logic is used in the control system logic. A 2% difference in external deaerator level measurements will cause a deviation alarm for the level transmitter that exceeds the tolerance.

15.2 The external deaerator level is controlled by a proportional-integral (PI) feedback controller that compares the external deaerator level to the setpoint. The external deaerator level controller outputs a 0-100% value to the condensate to external deaerator feedwater control valve, LCA50AA201, to maintain the external deaerator level at its setpoint.

16.0 HP INTERMITTENT BLOWDOWN (IBD) VALVE CONTROL

16.1 During startup operation drum swell will occur as steam is produced and the density of the drum water decreases. The HP intermittent blowdown (IBD) valve, HAD10AA102, is used for throttling service during startup to control drum swell when automatic feedback level control is ineffective. The HP intermittent blowdown (IBD) valves are set auto mode during the startup sequence based on defined drum levels. The HP intermittent blowdown (IBD) valve, HAD10AA102, is opened prior to HRSG operation. Upon startup the level in the drum should be lowered to the startup drum level by using the HP intermittent blowdown (IBD) valve, HAD10AA102. When the startup level is reached the HP IBD valves is closed and placed in automatic operating mode. As the drum level continues to rise during startup due to drum swell, the HP IBD valves are opened when the level reaches High Level and closes when the drum level is decreased to +1 inch (25.4mm) above Normal Water Level (NWL).

16.2 During normal operation, load changes and transient upset conditions can cause the drum level to swell or shrink. Normal drum level control is used when these operating conditions occur to control drum level. The HP IBD valves are also used when these operating conditions occur, as required, to prevent a high or low drum level trip condition.

16.3 During shutdown operation the CT turbine load is shed in a controlled manner. As the drum pressure is reduced, normal drum level control is used including the operation of the HP IBD valves to prevent a high level trip of the unit.

16.4 The HP IBD valves are motor operated globe valves with open & closed limit switches. These IBD valves are automatically controlled by the DCS or manually controlled by the Operator through the Operator Interface Machine. The IBD valves are driven open or closed by OPEN or CLOSE digital output commands from the DCS to the valves.

17.0 LP INTERMITTENT BLOWDOWN (IBD) VALVE CONTROL

17.1 During startup operation drum swell will occur as steam is produced and the density of the drum water decreases. The LP intermittent blowdown (IBD) valve, HAD50AA102, is used for throttling service during startup to control drum swell when automatic feedback level control is ineffective. The LP IBD valves are set auto mode during the startup sequence based on defined drum levels. The LP intermittent blowdown (IBD) valve, HAD50AA102, is opened prior to HRSG operation. Upon startup the level in the drum should be lowered to the startup drum level by using the LP intermittent blowdown (IBD) valve, HAD50AA102. When the startup level is reached the LP IBD valves are closed and placed

in automatic operating mode. As the drum level continues to rise during startup due to drum swell, the LP IBD valves are opened when the level reaches High Level and closes when the drum level is decreased to +1 inch (25.4mm) above Normal Water Level (NWL).

17.2 During normal operation, load changes and transient upset conditions can cause the drum level to swell or shrink. Normal drum level control is used when these operating conditions occur to control drum level. The LP IBD valves are also used when these operating conditions occur, as required, to prevent a high or low drum level trip condition.

17.3 During shutdown operation the CT turbine load is shed in a controlled manner. As drum pressure is reduced, normal drum level control is used including the operation of the LP IBD valves to prevent a high level trip of the unit.

17.4 The LP IBD valves are motor operated globe valves with open & closed limit switches. These IBD valves are automatically controlled by the DCS or manually controlled by the Operator through the Operator Interface Machine. The IBD valves are driven open or closed by OPEN or CLOSE digital output commands from the DCS to the valves.

18.0 CONTROL OF HP DRUM VENT VALVE

The HP Drum vent valve, HAD10AA101, is used during a cold startup to vent noncondensibles from the HP Drum and HP Drum steam outlet piping when the HP Evaporator begins steaming. When the average HP Drum pressure measured by pressure transmitters, HAD10CP001 & HAD10CP002, is 1.7237barg (25 psig), the on/off vent valve is closed.

19.0 CONTROL OF LP DRUM VENT VALVE

The LP Drum vent valve, HAD50AA101, is used during a cold startup to vent noncondensibles from the LP Drum and LP Drum steam outlet piping when the LP Evaporator begins steaming. When the average LP Drum pressure measured by pressure transmitters, HAD50CP001 & HAD50CP002, is 1.0342barg (15 psig), the on/off vent valve is closed.

20.0 EXTERNAL DEAERATOR VENT VALVE CONTROL

20.1 The external deaerator vent valve, LAA10AA102 is used to vent air (oxygen) from the external deaerator vent valve when the external deaerator begins running. When the deaerator pressure is greater than (14.63 psia) 0 psig, the external deaerator vent valve, LAA10AA102 is opened. When the

deaerator pressure is lesser than (14.63 psia) 0 psig, the external deaerator vent valve, LAA10AA102 is closed.

21.0 CONTROL OF HP ECONOMIZER MANIFOLD VENT VALVE

The HP Economizer manifold vent valve, HAC20AA101, is a motor operated valve that is used to vent steam from the last economizer module to the HP Drum in the event that near steaming conditions in the economizer occur. Conditions for a potentially steaming economizer are detected by measuring the approach temperature, which is the difference between the HP drum saturation temperature and the HP economizer outlet temperature. The HP economizer outlet temperature is measured by thermocouple HAC20CT001. The HP Drum saturation temperature is determined in the DCS as a function of the average HP Drum saturation pressure measured by the drum pressure transmitters, HAD10CP001 & HAD10CP002. If the approach temperature is less than 3 °C, the HP Economizer vent valve is opened. When the approach temperature is greater than 5 °C the HP Economizer vent valve is closed. Note that the manually operated HP Economizer module header vent valve, HAC20AA601, remains open at all times.

22.0 CONTROL OF LP ECONOMIZER MANIFOLD VENT VALVE

The LP Economizer manifold vent valve, HAC50AA101, is a motor operated valve that is used to vent steam from the last economizer module to the LP Drum in the event that near steaming conditions in the economizer occur. Conditions for a potentially steaming economizer are detected by measuring the approach temperature, which is the difference between the LP drum saturation temperature and the LP economizer outlet temperature. The LP economizer outlet temperature is measured by thermocouple HAC50CT001. The LP Drum saturation temperature is determined in the DCS as a function of the average LP Drum saturation pressure measured by the drum pressure transmitters, HAD50CP001 & HAD50CP002. If the approach temperature is less than 3 °C, the LP Economizer vent valve is opened. When the approach temperature is greater than 5 °C the LP Economizer vent valve is closed. Note that the manually operated LP Economizer module header vent valve, HAC50AA601, remains open at all times.

23.0 CONTROL OF HP SH OUTLET LINE AUTOMATIC DRAIN POT

23.1 During startup and low load transient operating conditions, condensate may form in the steam piping when operation is near saturated steam conditions. In order to prevent downstream surface damage of HRSG heat transfer surface or the Steam Turbine due to condensate impingement, it is necessary to drain condensate from the piping as it forms. Automatic drain pot valve, HAH10AA204, downstream of

the HP SH outlet line, is used to prevent condensation from damaging the HP Superheater during startup and/or upset conditions. Pressure transmitter, HAH10CP002, measures the HP SH line pressure. The corresponding steam saturation temperature (Tsat) is then determined as a function of the HP SH outlet line pressure. The HP SH outlet line drain pot temperature is measured by thermocouples, HAH10CT006 that is located in the drain pot upstream of the automatic drain valve. If the temperature difference between the HP SH outlet line drain pot temperature and the corresponding steam saturation temperature of the HP SH line pressure is less than or equal to 12 °C, automatic drain pot valves, HAH10AA204, is opened. When the temperature difference between the HP SH outlet line drain pot temperatures and the corresponding steam saturation temperature of the HP SH line pressure is greater than 14 °C, automatic drain pot valve, HAH10AA204, is closed.

24.0 CONTROL OF HP SH ATTEMPERATOR AUTOMATIC DRAIN POT

24.1 During startup and low load transient operating conditions, condensate may form in the steam piping, when operation is near saturated steam conditions. In order to prevent downstream surface damage of HRSG heat transfer surface or the Steam Turbine due to condensate impingement, it is necessary to drain condensate from the piping as it forms. Automatic drain pot valve, HAH10AA203, downstream of the HP attemperator, is used to prevent condensation from damaging the HP Superheater during startup and/or upset conditions. Pressure transmitter, HAH10CP001, measures the HP attemperator header pressure. The corresponding steam saturation temperature (Tsat) is then determined as a function of the HP attemperator header pressure. The HP attemperator drain pot temperature is measured by thermocouple, HAH10CT005 that is located in the drain pot upstream of the automatic drain valve. If the temperature difference between the HP attemperator drain pot temperature and the corresponding steam saturation temperature of the HP attemperator header pressure is less than or equal to 10 °C, automatic drain pot valve, HAH10AA203, is opened. When the temperature difference between the HP attemperator drain pot temperature and the corresponding steam saturation temperature of the HP attemperator header pressure is greater than 12°C, automatic drain pot valve, HAH10AA203, is closed.

25.0 CONTROL OF HP MODULE MS302 AND MS303 CROSSOVER AUTOMATIC DRAIN POT

25.1 During startup and low load transient operating conditions, condensate may form in the steam piping, when operation is near saturated steam conditions. In order to prevent downstream surface damage of HRSG heat transfer surface or the Steam Turbine due to condensate impingement, it is necessary to drain condensate from the piping as it forms. Automatic drain pot valve, HAH10AA202, located in the

HP SH module MS302 and MS303 crossover is used to remove condensation from the HP SH modules MS302 and MS303 and prevent damage to the modules MS302 and MS303 tubes and piping during startup and/or upset conditions. Pressure transmitters, HAD10CP001 & HAD10CP002, measure the HP drum pressure. When HP drum average pressure is greater than 4.13685barg (60 Psig), automatic drain valve, HAH10AA202, is closed. When HP drum average pressure is less than or equal to 4.13685barg (60 Psig), automatic drain valve, HAH10AA202, is opened. During warm start up, operator opens the valve and keeps the valve to be opened status about 5 minutes, then operator closes the drain valve. During hot start up, operator opens the valves and keeps the valve to be opened status about 3 minutes, then operator closes the drain valve.

26.0 CONTROL OF LP SH OUTLET LINE AUTOMATIC DRAIN POT BEFORE STEAM STOP VALVE

26.1 During startup and low load transient operating conditions, condensate may form in the steam piping, when operation is near saturated steam conditions. In order to prevent downstream surface damage of HRSG heat transfer surface or the Steam Turbine due to condensate impingement, it is necessary to drain condensate from the piping as it forms. Automatic drain pot valve, HAH50AA202, downstream of the LP SH outlet line, is used to prevent condensation from damaging the LP Superheater during startup and/or upset conditions. The pressure transmitter, HAH50CP001, measures the LP SH line pressure. The corresponding steam saturation temperature (Tsat) is then determined as a function of the LP SH outlet line pressure. The LP SH outlet line drain pot temperature is measured by thermocouple, HAH50CT002 that is located in the drain pot upstream of the automatic drain valve. If the temperature difference between the LP SH outlet line drain pot temperature and the corresponding steam saturation temperature of the LP SH line pressure is less than or equal to 10°C, automatic drain pot valve, HAH50AA202, is opened. When the temperature difference between the LP SH outlet line temperature and the corresponding steam saturation temperature of the LP SH line pressure is greater than 12°C, automatic drain pot valve, HAH50AA202, is closed.

27.0 CONTROL OF MOTOR OPERATED OPEN/CLOSE VALVES

27.1 The open/close motor operated valves are commanded opened or closed from the DCS per the User's control system design and consistent with startup (i.e., hot, cold, or warm start operation), normal start up operation, normal shutdown operation. All of the open/close motor operated valves' motor starters are integral to the motor operators.

27.2 The Operator or DCS control system initiates an OPEN or CLOSE command to the motor operated valve. A 120 VAC signal to the motor operator control circuitry is switched on or off according to the

corresponding OPEN or CLOSE digital command signal from the DCS, which then allows the respective valve to be powered open or close.

The open/close motor operated valves are:

HAD10AA101, HP DRUM VENT VALVE
HAD10AA102, HP DRUM INTERMITTENT BLOWDOWN VALVE
HAC20AA101, HP ECONOMIZER VENT VALVE
LAB10AA102, HP ECONOMIZER INLET BLOCK VALVE
LAE10AA101, HP SPRAY INTER-STAGE BLOCK VALVE
HAD50AA101, LP DRUM VENT VALVE
HAD50AA102, LP DRUM INTERMITTENT BLOWDOWN VALVE
HAC50AA101, LP ECONOMIZER VENT VALVE
LAB50AA101, LP ECONOMIZER INLET BLOCK VALVE
LAA10AA102, DA TANK VENT VALVE

28.0 HRSG SIGNAL MONITORING FOR PERFORMANCE INDICATION AND ALARMS (AS REQUIRED)

The following signals, which have not already been discussed in section 1 above per NFPA 85 requirements, are available for indication at the Operator Interface Machine for HRSG performance parameter indication and alarming as required.

1. HP SH Attemperator Steam Inlet Temperature (Temperature Thermocouple, HAH10CT001, which inputs a type E thermocouple input signal to the DCS).
2. HP Economizer Inlet Temperature (Temperature Thermocouple, LAB10CT001, which inputs a type E thermocouple input signal to the DCS).
3. HP Economizer Outlet Temperature (Temperature Thermocouple, HAC20CT001, which inputs a type E thermocouple input signal to the DCS).
4. HP SH Attemperator Steam Inlet Pressure (Pressure transmitter, HAH10CP001, which inputs a 4-20 mA signal to the DCS).
5. HP Economizer Feedwater Inlet Pressure (Pressure transmitter, LAB10CP001, which inputs a 4-20 mA signal to the DCS).
6. LP Economizer Feedwater Outlet Temperature (Temperature Thermocouple, HAC50CT001, which inputs a type E thermocouple input signal to the DCS).
7. LP Economizer Feedwater Inlet Temperature (Temperature Thermocouple, LAB50CT001, which inputs a type E thermocouple input signal to the DCS).
8. LP Economizer Feedwater Inlet Pressure (Pressure transmitter, LAB50CP001, which inputs a 4-20 mA signal to the DCS).

9. HP SH Attemperator Steam Outlet Temperature (Temperature Thermocouple, HAH10CT002, which inputs a type E thermocouple input signal to the DCS).
10. HP Steam Outlet Temperature (Temperature Thermocouples, HAH10CT003 & HAH10CT004 which input type E thermocouple input signals to the DCS).
11. HP Feedwater Flow (Flow transmitter, LAB10CF001, which inputs a 4-20 mA signal to the DCS).
12. HP Steam Outlet Pressure (Pressure transmitters, HAH10CP002, which inputs 4-20 mA signals to the DCS).
13. LP Steam Outlet Temperature (Temperature Thermocouple, HAH50CT001, which inputs a type E thermocouple input signal to the DCS).
14. LP Steam Outlet Pressure (Pressure transmitters, HAH50CP001, which input 4-20 mA signals to the DCS).
15. LP Feedwater Flow (Flow transmitters, LAB50CF001, which inputs a 4-20 mA signal to the DCS).
16. LP Economizer Feedwater Outlet Temperature (Temperature Thermocouple, HAC50CT001, which inputs a type E thermocouple input signal to the DCS).
17. LP Economizer Feedwater Inlet Temperature (Temperature Thermocouple, LAB50CT001, which inputs a type E thermocouple input signal to the DCS).
18. LP Economizer Feedwater Inlet Line Pressure (Pressure Transmitter, LAB50CP001, which inputs a 4-20mA signal to the DCS).
19. Blowdown Tank temperature (Temperature Thermocouple, LCQ10CT001 which inputs a type E thermocouple input signal to the DCS)
20. External Deaerator Level (Level transmitters, LAA10CL001 & LAA10CL002 , which inputs 4-20mA signals to the DCS)
21. External Deaerator Temperature(Temperature Thermocouple, LAA10CT001 which inputs a type E thermocouple input signal to the DCS)
22. External Deaerator Pressure (Pressure transmitters, LAA11CP001, which input 4-20 mA signals to the DCS).
23. HRSG Duct Gas Temperature (individual temperatures and average temperature of four Temperature Thermocouples, HNA11CT001 Thru HNA11CT004, which inputs a type E thermocouple input signal to the DCS).

24. HRSG Stack Temperature (individual temperatures and average temperature of four Temperature Thermocouples, HNE10CT001& HNE10CT002, which inputs a type E thermocouple input signal to the DCS).
25. HRSG Duct Exhaust Gas Pressure (HRSG Duct Pressure based on either of two HRSG Duct pressure transmitter, HNB10CP001 & HNB10CP004, which send 4-20 mA signals to the DCS)

29.0 APPENDIX C - DENSITY COMPENSATED STEAM DRUM/DEAERATOR LEVEL EQUATIONS

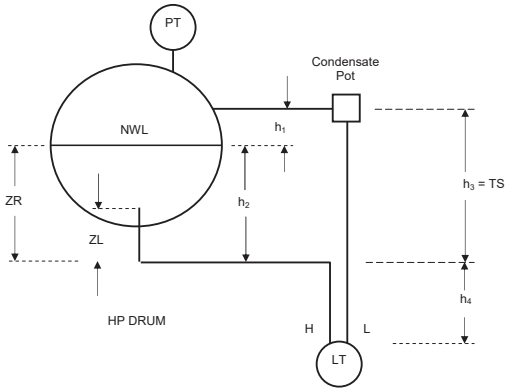

FIGURE 1

Differential pressure transmitters are used to measure the liquid level in the steam drum. Pressure transmitters are used to measure the steam pressure in the steam drum. In order to determine the correct drum level, calculations are required to density compensate the drum level measurement because of significant density differences between the drum water and the water in the sensing lines to the transmitter. In order to determine the density compensation of the drum level measurement, steam and water density calculations based on ASME Steam Table data must be done using the drum pressure measurement.

The density compensated level equation used to determine the actual steam drum level for control and indication is essentially a hydrostatic pressure balance (reference Figure 1). The differential pressure (dp) across the transmitter is equal to the difference between the hydrostatic pressures on the low and high side of

the transmitter's diaphragm. The static pressure on the high side of the transmitter's diaphragm is exerted by 3) the cold water in the reference leg at a relatively constant temperature. The static pressure on the low side of the transmitter's diaphragm is exerted by the sum of hydrostatic pressures from 2) the hot water in the drum and in the vertical sensing line from the drum tap to the first run of horizontal sensing line to the transmitter and 1) the steam in the drum. Both 1) and 2) are at drum saturation conditions. The dp of the transmitter is the pressure on the High Pressure tap minus the pressure on the Low Pressure tap of the transmitter. The pressures on the High Pressure and Low Pressure taps are:

1) $P,low = [(\rho_0 g h_3 / g_c) + (\rho_0 g h_4 / g_c) + P_D]$
2) $P,high = [(\rho_1 g h_1 / g_c) + (\rho_2 g h_2 / g_c) + (\rho_0 g h_4 / g_c) + P_D]$

The transmitter dp is:

3) $dp = (P,high – P,low)$
$= -[(\rho_0 g h_3 / g_c) + (\rho_0 g h_4 / g_c) + P_D] + [(\rho_1 g h_1 / g_c) + (\rho_2 g h_2 / g_c) + (\rho_0 g h_4 / g_c) + P_D]$,

where,

dp = differential pressure measured by transmitter, psi (kg_f / m^2)
h_1 = height of steam in drum, in.
h_2 = height of water in drum, in.
h_3 = height of water between drum level transmitter tap to tap connections.
h_4 = height of water from low drum tap connection to drum level transmitter.
ρ_1 = Density of steam at drum operating temperature and pressure.
ρ_2 = Density of water at drum operating temperature and pressure.
ρ_0 = Density of water in sensing lines at ambient temperature and drum operating pressure.
P_D = Drum Pressure, psig (kg_f / m^2)

The respective fluid heights are determined from the lower drum tap's first run of horizontal sensing line to the transmitter.

To convert the dp measurement in psi to the more common units in engineering fluid dynamics of inches of head, i.e., inches x lb-force per lb-mass, the dp in psi is divided by the reference density, ρ_0. Dividing the fluid densities on the right hand side of the force balance by the reference density yields the respective specific gravities. The acceleration due to gravity, g, is numerically equal at the surface of the earth to the gravitational force constant g_c. For all intents and purposes $g = g_c$ for the drum level measurement equations. The resulting equation for dp is:

3) $dp = (P,high – P,low) = (h_3*(SG_0) + h_4*(SG_0) + P_D) - (h_1*(SG_1) + h_2*(SG_2) + h_4*(SG_0) + P_D)$

$= -h_3*(SG_0) + h_1*(SG_1) + h_2*(SG_2)$

where,

dp = differential pressure measured by transmitter, in of head, in-lb_f / lb (cm-kg_f / kg)
SG_1 = Specific Gravity of steam at drum operating temperature and pressure (no units).
SG_2 = Specific Gravity of water at drum operating temperature and pressure.
SG_0 = Specific Gravity of water in sensing lines at ambient temperature and drum operating pressure.

The height of the steam (h_1) can be expressed in terms of the height of the cold water reference leg (h_3) and the actual drum level (h_2), i.e., $h_1 = h_3 – h_2$. Letting $h_1 = h_3 – h_2$, the equation for dp becomes--

4) $dp = -h_3*(SG_0) + ((h_3 – h_2)*(SG_1) + h_2*(SG_2))$, and
5) $dp = -h_2*(SG_1) + h_3*(SG_1) + h_2*(SG_2) - h_3*(SG_0) = -(SG_1 - SG_2)* h_2 - (SG_0 - SG_1)* h_3$

Defining a new variable for h_3 as TS, the equation for dp becomes:

6) $dp = -(SG_1 - SG_2)* h_2 - (SG_0 - SG_1)* TS$

where,

TS = height of water in the reference leg between drum level transmitter tap to tap connections, in.

Normally the drum level transmitter instrument connection is installed into the bottom of the steam drum using a pipe nozzle assembly. The level transmitter's vertical pipe connection at the bottom of the drum is connected to the drum level transmitter's horizontal sensing line. The vertical pipe exits through the drum wall and insulation, of course, but some length of the pipe protrudes into the drum water as well. However the height of water in this vertical pipe is not representative of the true water level in the drum. The head of water in the vertical pipe does however contribute to the dp measurement that must be density compensated in order to determine the true drum water level. The tap to tap distance TS in eq. 6) above is the distance between the drum level transmitter's horizontal instrument sensing lines. It is imperative that this distance be used for the value of TS in the density compensated drum level equation above. Also and most importantly, the value of TS is the minimum value of the level transmitter differential pressure span in inches, centimeters or millimeters of head. Also the length of vertical pipe from the drum insulation's outer lagging to the drum level transmitter's horizontal sensing line should be a minimum and should be well insulated. The goal is to minimize the

difference between the drum saturation temperature and the temperature of the water in the vertical pipe thus minimizing the compensated drum level measurement error due to cooling.

It is common practice to reference the water level in the drum from normal water level (NWL). All readings are therefore + or – readings from NWL with NWL equal to zero. A new variable, h_c, is defined as the density-compensated drum level referenced from NWL. ZR, the height of water from the lower drum level transmitter horizontal sensing line connection to NWL, is subtracted from the value for h_2 to determine h_c. The result is:

7) $h_c = h_2 – ZR$, or
8) $h_2 = h_c + ZR$

Substituting the equation for h_2 above into the equation for dp, the resulting equation for dp is:

9) $dp = -(SG_1 - SG_2)^* (h_c + ZR) - (SG_0 - SG_1)^* TS$

where,

h_c = density-compensated drum level referenced from NWL, in. (mm.)
ZR = height of water from the lower drum level transmitter horizontal sensing line connection to NWL, in. (mm.)

Upon rearranging the equation above and solving for h_c, the equation for the density-compensated drum level referenced from NWL is:

10) $h_c = [dp - (SG_1 – SG_0) * TS] /- (SG_1 – SG_2) – ZR$

At low pressures near atmospheric pressure it is convenient to use the uncompensated drum level measurement. The uncompensated level measurement inaccuracy is not significant at low pressures. Until sufficient steam is produced in the boiler the density compensated drum level measurement using specific gravity data may lead to inaccuracies depending on how the ASME steam tables are characterized to determine steam and water specific gravities as functions of saturation drum pressure. It is convenient to select a minimum drum pressure, i.e., 0.3447 barg (5 psig), for which the density compensated drum level equations are used; the uncompensated drum level, h_{uc}, is determined at drum pressures less than 0.3447 barg (5 psig). Using equation 9) above the equation is expanded to separate the specific gravity terms.

11) $dp = -(SG_1) * (h_c + ZR) + (SG_2)^* (h_c + ZR) -(SG_0) * TS +(SG_1)^* TS$

The effect of steam density on the measurement of drum level at low drum pressure less than 20 psia (1.38 bara) is insignificant and therefore SG_1 is set equal to zero. The specific gravities of water at saturation pressures less than 20 psia (1.38 bara) are nearly equal to 1.0 and SG_2 and SG_0 are set equal to 1.0. Substituting these values into eq. 11) above the following equations can be written.

12) $dp = 0 * (h_{uc} + ZR) - (1)^* (h_{uc} + ZR) + (1) * TS – (0)^* TS$
13) $dp = TS - h_{uc} - ZR$
14) $h_{uc} = TS - ZR - dp$; ($P_{avg,drum}$ </= 5.3 psig (0.37 barg)

Summarizing, the following equations are used to determine the compensated and uncompensated drum level measurements.

15) $h_c = (dp -(SG_1 – SG_0) * TS) /- (SG_1 – SG_2) – ZR$; ($P_{avg,drum}$ > 5.3 psig (0.37 barg))
16) $h_{uc} = TS - ZR – dp$; ($P_{avg,drum}$ </= 5.3 psig (0.37 barg))

where,

h_c = density-compensated drum level referenced from NWL, in. (mm.)
h_{uc} = uncompensated drum level for drum pressures less than 5.3 psig (0.37 barg) and referenced from NWL, in. (mm.)
ZR = height of water from the lower drum level transmitter horizontal sensing line connection to NWL, in. (mm.)
dP =raw drum level transmitter differential pressure measurement, in. of head (mm. of head).
TS = height of water in the reference leg between horizontal drum level transmitter tap to tap connections, in. (mm.)
SG_1 = Specific Gravity of steam at drum operating temperature and pressure.
SG_2 = Specific Gravity of water at drum operating temperature and pressure.
SG_0 = Specific Gravity of water in sensing lines at ambient temperature (i.e., 100 °F (37.8 °C)) and drum operating pressure.

For project 17490, the values for the following variables used in the equation for the density compensated drum level measurement referenced from NWL and the calibrated level transmitter lower and upper range values are:

HRSG Drum	HP	LP
Variable		
ZR, (in.)	**1029mm (40.5 in)**	**558.8mm (22in)**
TS, (in.)	**1258mm (49.5 in)**	**787mm (31 in)**

6.0. GAS SIDE PRESSURE DROP

The static gas side pressure drop for each case is given in the following table.

VPI Case No.	Static Pressure Drop (In. WC)			
	Modules	Duct	Stack	Total
G001.100%.33C.2U	9.30	0.14	1.23	10.68
C001.100%.33C.2U	7.91	0.12	0.98	9.01
C002.100%.33C.2U	7.83	0.12	0.98	8.93
C003.100%.33C.1U	7.60	0.12	0.98	8.70
C004.60%.33C.2U	4.46	0.07	0.42	4.95
C005.100%.33C.2U	9.27	0.14	1.23	10.65
G01N.100%.15C.2U	9.25	0.14	1.13	10.53
G02N.100%.15C.2U	9.19	0.14	1.13	10.47
G03N.60%.15C.2U	4.63	0.07	0.39	5.09
G04N.50%.15C.2U	4.13	0.06	0.29	4.48
G05N.100%.33C.2U	7.78	0.12	0.96	8.86
G06N.100%.33C.2U	7.70	0.12	0.96	8.78
G07N.60%.33C.2U	4.40	0.07	0.41	4.87
G08N.60%.33C.2U	4.33	0.07	0.42	4.81
G09N.50%.33C.2U	3.80	0.06	0.32	4.17
G10N.50%.33C.2U	3.73	0.06	0.33	4.12
G11N.100%.33C.2U	9.21	0.14	1.22	10.57
G12N.100%.33C.2U	9.12	0.14	1.21	10.48
G13N.100%.33C.2U	9.26	0.14	1.24	10.64
G14N.100%.33C.2U	9.24	0.14	1.22	10.60
G15N.100%.33C.2U	9.14	0.14	1.22	10.50
G16N.100%.40C.1U	8.88	0.14	1.21	10.23
G17N.100%.40C.1U	8.81	0.14	1.21	10.16
G18N.100%.40C.2U	6.40	0.10	0.75	7.25
G19N.100%.40C.2U	6.31	0.10	0.75	7.16
G20N.60%.40C.2U	3.95	0.06	0.38	4.40
G21N.50%.40C.2U	3.56	0.05	0.30	3.92
G22N.100%.33C.2U	9.19	0.14	1.24	10.57
G23N.100%.33C.2U	9.19	0.14	1.24	10.57
G24N.100%.40C.2U	6.37	0.10	0.74	7.21
G002.100%.33C.2U	9.12	0.14	1.21	10.48
G003.100%.33C.2U	7.71	0.12	0.96	8.79
G003B.100%.33C.2U	7.83	0.12	0.96	8.91

G003BE.100%.33C.2U	7.76	0.12	0.96	8.85
G004.60%.33C.2U	4.40	0.07	0.41	4.88
G004B.60%.33C.2U	4.43	0.07	0.37	4.87
G004BE.60%.33C.2U	4.38	0.07	0.38	4.82
G005.60%.33C.2U	5.16	0.08	0.54	5.79
G011.100%.33C.1U	8.74	0.14	1.21	10.09
G013.100%.33C.1U	7.38	0.12	0.96	8.46
G013B.100%.33C.1U	7.46	0.12	0.96	8.54
G014.60%.33C.1U	4.17	0.07	0.43	4.68
G014B.60%.33C.1U	4.22	0.07	0.38	4.67
G015.60%.33C.1U	4.90	0.08	0.56	5.54
G006.50%.33C.2U	3.87	0.06	0.33	4.25
G006B.50%.33C.2U	3.89	0.06	0.29	4.24
G006BE.50%.33C.2U	3.84	0.06	0.29	4.19
G016.50%.33C.2U	3.66	0.06	0.35	4.08
G007.100%.12C.2U	9.30	0.15	1.13	10.58
G008.100%.40C.2U	6.35	0.10	0.75	7.20
G009.50%.40C.2U	3.51	0.05	0.30	3.86
G019.50%.40C.1U	3.33	0.05	0.32	3.70
Case1.100%.33.2U	9.33	0.14	1.24	10.70
Case2.100%.33.2U	9.24	0.14	1.23	10.62
Case3.100%.33.2U	8.08	0.12	1.01	9.22
Case4.60%.33.2U	4.41	0.07	0.41	4.89
Case5.100%.33.2U	7.80	0.12	1.01	8.93
Case1.100%.33.2U TUF	9.33	0.14	1.24	10.71
Case4.60%.33.2U TUF	4.41	0.07	0.41	4.89
Case5.100%.33.2U TUF	7.80	0.12	1.01	8.93
ABCase1.100%.32C.2U	8.06	0.12	1.01	9.19
ABCase2.100%.32C.2U	7.98	0.12	1.01	9.11
ABC-2.100%.32C.2U TUF	7.98	0.12	1.01	9.11
ABCase3.100%.32C.1U	7.78	0.12	1.01	8.91
ABC-3.100%.32C.1U TUF	7.78	0.12	1.01	8.91
ABCase4.60%.32C.2U	4.38	0.07	0.41	4.86
ABC-4.60%.32C.2U TUF	4.38	0.07	0.41	4.86
BWCase1.100%.32C.2U	9.24	0.14	1.22	10.60
BWCase2.100%.32C.2U	9.15	0.14	1.22	10.51
BWC-2.100%.32C.2U TUF	9.15	0.14	1.22	10.51
BWCase3.100%.32C.2U	8.01	0.12	1.00	9.13
BWCase4.60%.32C.2U	4.37	0.06	0.41	4.84

BWC-4.60%.32C.2U TUF	4.37	0.06	0.41	4.85
BWCase5.100%.32C.1U	7.74	0.12	1.00	8.86
BWC-5.100%.32C.1U TUF	7.73	0.12	1.00	8.85

7.0. HEATING SURFACE DATA

Section Name	HPSH1	HPSH2	HPSH3	HPEV1	HPEV2	HPEV3
Heating Surface, sq. m	783.61	1108.30	1108.30	1375.85	2063.77	2063.77
Finned length of Tubes, m	15.24	15.24	15.24	15.24	15.24	15.24
Number of Tubes/row	29	29	29	36	36	36
Number of passes/module	1	1	1	1	1	1
Number of Rows	2	2	2	2	3	3
Tube O.D., mm	38.1	38.1	38.1	38.1	38.1	38.1
Tube Min Wall, mm	4.064	3.048	2.667	2.667	2.667	2.667
Tube Material	SA-213 T22	SA-213 T22	SA-213 T11	SA-210 A1	SA-210 A1	SA-210 A1
Fin Type	1	2	2	2	2	2
Fins/mm	0.268	0.287	0.287	0.287	0.287	0.287
Fin Height, mm	9.525	12.700	12.700	12.700	12.700	12.700
Fin Thickness, mm	1.016	1.016	1.016	1.016	1.016	1.016
Fin Material	T409	T409	T409	CS	CS	CS
Outlet Hdr. O.D., mm	219.075	219.075	219.075	219.075	219.075	219.075
Outlet Hdr. Thick., mm	25.400	22.225	18.237	15.062	15.062	15.062
Outlet Hdr. Material	SA-335 P22	SA-335 P22	SA-335 P11	SA-106 C	SA-106 C	SA-106 C
Inlet Hdr. O.D., mm	219.075	219.075	219.075	219.075	219.075	219.075
Inlet Hdr. Thick., mm	25.4	22.225	18.237	15.062	15.062	15.062
Inlet Hdr. Material	SA-335 P22	SA-335 P22	SA-335 P11	SA-106 C	SA-106 C	SA-106 C
Location	Box 1	Box 1	Box 1	Box 1	Box 1	Box 1

Section Name	HPEV4	HPEV5	HPEC1	HPEC2	HPEC3	LPSH1
Heating Surface, sq. m	2063.77	2063.77	1375.85	2063.77	2063.77	380.98
Finned length of Tubes, m	15.24	15.24	15.24	15.24	15.24	15.24
Number of Tubes/row	36	36	36	36	36	36
Number of passes/module	1	1	3	5	5	1
Number of Rows	3	3	2	3	3	1
Tube O.D., mm	38.1	38.1	38.1	38.1	38.1	38.1
Tube Min Wall, mm	2.667	2.667	2.667	2.667	2.667	2.667
Tube Material	SA-210 A1	SA-210 A1	SA-210 A1	SA-210 A1	SA-210 A1	SA-210 A1
Fin Type	2	2	2	2	2	1
Fins/mm	.287	.287	.287	.287	.287	.201
Fin Height, mm	12.700	12.700	12.700	12.700	12.700	9.525
Fin Thickness, mm	1.016	1.016	1.016	1.016	1.016	1.016
Fin Material	CS	CS	CS	CS	CS	CS
Outlet Hdr. O.D., mm	219.075	219.075	219.075	219.075	219.075	219.075
Outlet Hdr. Thick., mm	15.062	15.062	20.607	20.607	20.607	10.312
Outlet Hdr. Material	SA-106 C	SA-106 C	SA-106 C	SA-106 C	SA-106 C	SA-106 B
Inlet Hdr. O.D., mm	219.075	219.075	219.075	219.075	219.075	219.075
Inlet Hdr. Thick., mm	15.062	15.062	20.607	20.607	20.607	10.312
Inlet Hdr. Material	SA-106 C	SA-106 C	SA-106 C	SA-106 C	SA-106 C	SA-106 B
Location	Box 1	Box 1	Box 1	Box 1	Box 2	Box 2

Section Name	HPEC4	HPEC5	LPEV1	LPEV2	LPEV3	LPEV4
Heating Surface, sq. m	1375.85	2063.77	1935.76	2063.77	2063.77	2063.77
Finned length of Tubes, m	15.24	15.24	15.24	15.24	15.24	15.24
Number of Tubes/row	36	36	36	36	36	36
Number of passes/module	5	5	1	1	1	1
Number of Rows	2	3	3	3	3	3
Tube O.D., mm	38.1	38.1	38.1	38.1	38.1	38.1
Tube Min Wall, mm	2.667	2.667	2.667	2.667	2.667	2.667
Tube Material	SA-210 A1	SA-210 A1	SA-210 A1	SA-210 A1	SA-210 A1	SA-210 A1
Fin Type	2	2	2	2	2	2
Fins/mm0	.287	0.287	0.268	0.287	0.287	0.287
Fin Height, mm	12.7	12.7	12.7	12.7	12.7	12.7
Fin Thickness, mm	1.016	1.016	1.016	1.016	1.016	1.016
Fin Material	CS	CS	CS	CS	CS	CS
Outlet Hdr. O.D., mm	219.075	219.075	219.075	219.075	219.075	219.075
Outlet Hdr. Thick., mm	20.607	20.607	10.312	10.312	10.312	10.312
Outlet Hdr. Material	SA-106 C	SA-106 C	SA-106 B	SA-106 B	SA-106 B	SA-106 B
Inlet Hdr. O.D., mm	219.075	219.075	219.075	219.075	219.075	219.075
Inlet Hdr. Thick., mm	20.607	20.607	10.312	10.312	10.312	10.312
Inlet Hdr. Material	SA-106 C	SA-106 C	SA-106 B	SA-106 B	SA-106 B	SA-106 B
Location	Box 2	Box 2	Box 2	Box 2	Box 2	Box 2

Section Name	HPEC6	HPEC7	LPEC1	HPEC8	LPEC2	HPEC9
Heating Surface, sq. m	761.97	2063.77	1034.72	2063.77	1375.85	2063.77
Finned length of Tubes, m	15.24	15.24	15.24	15.24	15.24	15.24
Number of Tubes/row	36	36	36	36	36	36
Number of passes/module	5	5	6	5	6	5
Number of Rows	2	3	2	3	2	3
Tube O.D., mm	38.1	38.1	38.1	38.1	38.1	38.1
Tube Min Wall, mm	2.667	2.667	2.667	2.667	2.667	2.667
Tube Material	SA-210 A1	SA-210 A1	SA-210 A1	SA-210 A1	SA-210 A1	SA-210 A1
Fin Type	1	2	1	2	2	2
Fins/mm	0.201	0.287	0.287	0.287	0.287	0.287
Fin Height, mm	9.525	12.700	9.525	12.700	12.700	12.700
Fin Thickness, mm	1.016	1.016	1.016	1.016	1.016	1.016
Fin Material	CS	CS	CS	CS	CS	CS
Outlet Hdr. O.D., mm	219.075	219.075	219.075	219.075	219.075	219.075
Outlet Hdr. Thick., mm	20.607	20.607	10.312	20.607	10.312	20.607
Outlet Hdr. Material	SA-106 C	SA-106 C	SA-106 B	SA-106 C	SA-106 B	SA-106 C
Inlet Hdr. O.D., mm	219.075	219.075	219.075	219.075	219.075	219.075
Inlet Hdr. Thick., mm	20.607	20.607	10.312	20.607	10.312	20.607
Inlet Hdr. Material	SA-106 C	SA-106 C	SA-106 B	SA-106 C	SA-106 B	SA-106 C
Location	Box 2	Box 2	Box 3	Box 3	Box 3	Box 3

Section Name	LPEC3	HPECA	LPEC4	HPECB	HPECC	HPECD	LPEC3
Heating Surface, sq. m	1375.85	2063.77	1375.85	2063.77	2063.77	2063.77	1375.85
Finned length of Tubes, m	15.24	15.24	15.24	15.24	15.24	15.24	15.24
Number of Tubes/row	36	36	36	36	36	36	36
Number of passes/module	6	5	7	5	5	5	6
Number of Rows	2	3	2	3	3	3	2
Tube O.D., mm	38.1	38.1	38.1	38.1	38.1	38.1	38.1
Tube Min Wall, mm	2.667	2.667	2.667	2.667	2.667	2.667	2.667
Tube Material	SA-210 A1	SA-210 A1	SA-210 A1	SA-210 A1	SA-210 A1	SA-210 A1	SA-210 A1
Fin Type	2	2	2	2	2	2	2
Fins/mm	.287	.287	.287	.287	.287	.287	.287
Fin Height, mm	12.7	12.7	12.7	12.7	12.7	12.7	12.7
Fin Thickness, mm	1.016	1.016	1.016	1.016	1.016	1.016	1.016
Fin Material	CS	CS	CS	CS	CS	CS	CS
Outlet Hdr. O.D., mm	219.075	219.075	219.075	219.075	219.075	219.075	219.075
Outlet Hdr. Thick., mm	10.312	20.607	10.312	20.607	20.607	20.607	10.312
Outlet Hdr. Material	SA-106 B	SA-106 C	SA-106 B	SA-106 C	SA-106 C	SA-106 C	SA-106 B
Inlet Hdr. O.D., mm	219.075	219.075	219.075	219.075	219.075	219.075	219.075
Inlet Hdr. Thick., mm	10.312	20.607	10.312	20.607	20.607	20.607	10.312
Inlet Hdr. Material	SA-106 B	SA-106 C	SA-106 B	SA-106 C	SA-106 C	SA-106 C	SA-106 B
Location	Box 3	Box 3	Box 3	Box 3	Box 3	Box 3	Box 3

8.0. BOILER FEEDWATER AND BOILER WATER

Each plant location has distinctive water sources and issues. For this reason, boiler feedwater is beyond the control of the boiler manufacturer. It is the recommendation of Vogt Power that a competent consultant that specializes in boiler water treatment be engaged to advise the owner on the most economical conditioning of the water supply for boiler use.

Properly conditioned water and appropriate internal chemical treatment will give many years of trouble free boiler operation. The expense of a water consultant is an insurance against scale deposits and/or corrosion that could result tube failure and extended boiler outages.

Boiler water must meet certain minimum requirements in order to prevent scale or corrosion, and to control sludge and foaming. The following comments are offered for reference, but are in no way to be construed as recommendations of Vogt Power, Inc.

8.1 Boiler Feedwater

Generally boiler feedwater is filtered and de-ionized prior to its introduction to the steam cycle as make-up. Make-up water is required to offset the losses that occur due to valve packing leaks, turbine gland leaks, boiler feed pump gland leakage, blowdown, or other vents in the steam cycle. These losses must be replenished over time.

Condensate is one of the best sources of make-up water, but can contain contaminants such as acidic gases that make it corrosive to metal surfaces. Other contaminants from industrial plants can range from hydrocarbons to oil. A water consultant can assist in determining the treatment required to purify this valuable recycled water.

8.2 Conditioning

8.2.1 Control of pH

Acidic pH values will cause attacks on the boiler metal with resultant metal deterioration. The obvious control measure to prevent such corrosion is neutralization of acidic characteristics by the use of alkali.

Except in the special cases of corrosive attack involving high pressure boiler operation, experience suggests a boiler water pH of approximately 10.5-11.0 will prevent acid attack. This pH value is sufficiently high to stifle acidic attack on boiler

metal and also provides a sufficiently alkaline environment in the boiler water to aid in the precipitation of scale forming salts.

Note that the pre-boiler equipment (feedwater heater, pumps, piping, etc.) may be constructed of a variety of materials that may include copper alloys, carbon steel, stainless steel and phosphor bronze. Proper pH, usually in the 8.0 to 9.5 range, may be more appropriate. The water treatment consultant should account for the different components in different areas of the plant.

8.2.2 Control of Oxygen

Free oxygen dissolved in the boiler feedwater can attack carbon steels. The corrosion will most likely present as pitting of internal surfaces. Oxygen pitting is especially dangerous, because although the pits cover a small surface area, they are very deep compared to other types of surface corrosion, and can lead to rapid failure. Idle boilers which are not properly stored or “laid up” will corrode until either the oxygen has been used up or the boiler is returned to service. This can significantly shorten boiler life.

Oxygen can be controlled through deaeration and/or chemical scavenging. Oxygen content should be between 2.0 and 7.0 ppb by wt. at the economizer or feed water heater inlets. A mechanical deaerator can achieve this concentration if all spray nozzles and trays are in place and the steam supply is adequate. Chemical oxygen scavengers can be used to further reduce dissolved oxygen.

8.3 Contaminants

8.3.1 Magnetic Oxides

If magnetic oxides are present in the feedwater, they can be removed by filtering through resin beds or by electro-magnet filters. Magnetic oxides are typically iron compounds such as iron oxide or iron silicates. Deposits of iron oxide are typically found in boilers operating with very pure feedwater.

The usual source of iron oxide deposits lies in corrosion external to the boiler. Corrosion can leave iron in solution in the condensate or feedwater, which can then precipitate out under the higher temperature and alkalinity conditions of the boiler water.

Iron dissolved in the condensate can also combine with silica present in the boiler water and form iron silicate scales.

While internal corrective measures such as the use of organic sludge conditioning agents may be applied to minimize iron oxide deposits in the HRSG, the basic solution to the problem lies in correcting the corrosive conditions which put the iron into solution. The corrosion is most likely cause by dissolved oxygen and carbon dioxide. Dissolved gasses should be reduced to appropriate levels through the use of mechanical and/or chemical deaeration.

In some cases, the source of iron oxides and iron silicate boiler corrosion is not the result of corrosion external to the boiler. Corrosive attack on the boiler metal by high caustic concentrations or dissolved oxygen may also be the cause of this problem.

8.3.2 Oil

Oil is not typically found in boiler feedwater, and measures should be taken at every opportunity to avoid introducing oil into the system. Oil may be accidentally introduced into feedwater through pump or steam turbine lubrication system leaks or during maintenance activities. Due to oil’s tendency to float on water, it is difficult or impossible to remove oil from boiler water by blowdown, or to obtain a representative sample of boiler water for oil content testing. There is no easy way to confirm the presence of oil in the water. Its presence is revealed through the problems it causes.

Some of the most serious boiler operation problems such as tube warping, ruptures, localized overheating, foaming, priming, and scale formation can be traced to oil contamination. Overheating of boiler heating surfaces can occur when the oil forms a thin film on the internal surface, which acts as an insulator and retards the heat transfer process, resulting in an increase in tube metal temperature. Overheating can lead to pressure part warping and/or ruptures.

Foaming is the formation of foam or bubbles in the boiler, when steam bubbles do not coalesce and break. Foaming can be caused by excessive dissolved and suspended boiler water solids, sudden or dramatic load swings, or by some form of oil or soap. Animal fatty oils form soaps in the presence of boiler water alkalinities, thus creating foam in the boiler water. The foam produced may entirely fill the boiler drum steam space or just float on the surface in a thin layer. In either case, this foam causes appreciable boiler water entrainment, leading to the carryover of liquid water out of the drum into the superheaters or steam line. Dissolved chemicals or contaminants in the impure steam may foul superheater tubes and turbine blades, or just clog piping and traps.

Priming is characterized by large amounts of water passing out of the boiler with the steam, usually in intermittent slugs which may enter steam lines and steam turbines. Priming is more violent and spasmodic than foaming. This action is similar to the "bumping" experienced when water is boiled in an open beaker. It may occur simultaneously with foaming. High water levels in steam drums promote priming.

Since no method of internal conditioning can successfully cope with oil contamination, all oil should be removed from the boiler internal surfaces during commissioning by boil out or acid cleaning (see Section III). Oil in the feedwater should be removed externally before it can enter the boiler. Consult a water treatment expert for the best method.

8.3.3 Silica

Silica is problematic because it can be difficult to remove from water, and can form scale on heating surfaces or steam turbine components if not controlled. It is especially dangerous at pressures above 2000 psi, where it can gasify and be carried over in steam as a vapor, immune to the mechanical separation in the drum. There is no way to separate out gaseous silica. VPI recommends that the silica in the boiler water be kept as low as possible to guard the long life of the boiler components and the steam turbine. Consult a water treatment expert regarding control of silica in the feedwater.

8.3.4 Solids

Dissolved solids are in solution and cannot be removed by filtration. Suspended solids are those which are not in solution and which can be removed by filtration. Total solids represent the sum of the suspended and dissolved solids. Solids in boiler water may be magnetic or non-magnetic. TDS, or total dissolved solids, is the sum of all the impurities, including water treatment chemicals, in the boiler water. The additive effect of various boiler water constituents may produce a tendency for carryover.

Dissolved solids present in boiler water generally come from the solvent action of water in contact with the minerals of the earth or boiler components (ground water, or deposits already present in the boiler). Suspended solids are small particles of insoluble matter, mechanically introduced by the turbulent action of the water on solid objects or boiler parts.

Suspended solids may be corrosive in nature or form scale on boiler heating surfaces. For these reasons, suspended solids must be eliminated from boiler

water. Dissolved solids are typically sulfates, bicarbonates, and chlorides of calcium, magnesium, and sodium. Each of these ions may produce a specific effect in boiler feedwater. A high concentrations of dissolved solids can also cause foaming.

8.3.5 Hardness

Hardness in water is the sum of the calcium and magnesium present. Hardness is also reported as calcium hardness and magnesium hardness. In order to sub-divide the hardness in this manner the calcium hardness and total hardness are determined. The difference is assumed to be the magnesium hardness.

Hardness in water leads to scale formation. In boiler feed water conditioning, the hardness of water can cause the formation of scale on evaporative surfaces as well as excessive sludge or "mud", unless properly treated. Hardness may also cause scale and deposits in feed water heaters, feed lines, and economizers.

Total dissolved solids (TDS) can also be used as an indication of hardness. TDS is commonly measured using conductivity.

8.3.6 Calcium and Magnesium

Calcium and magnesium salts are the most common source of boiler scale. Internal chemical treatment is used to prevent deposit and scale formation from the residual hardness concentrations remaining in the feed water.

The most common source of scale is the breakdown of calcium bicarbonate to form calcium carbonate under the influence of heat. The precipitation of calcium carbonate to form boiler scale readily takes place where the boiler feed water contains any appreciable quantity of calcium bicarbonate. This action may also cause deposits to form in the feed lines, economizers, and feedwater heaters.

Calcium phosphate and calcium silicate are frequently deposited as boiler scale. Calcium silicate may be formed either from the combination of the calcium silicate ions naturally present or as a result of the use of sodium silicate as internal chemical treatment.

Magnesium salts present in boiler feed water are usually more easily prevented from forming scale than are the calcium salts. General practice is to precipitate magnesium in the boiler water in the form of magnesium hydroxide.

8.4 Other Water-Related Problems

8.4.1 Scale

The formation of scale and sludge deposits on boiler heating surfaces is the most serious problem encountered in steam generation. The object of the majority of the external treatment processes is to remove from the boiler feedwater those substances which will contribute to scale or deposit formations in the boiler.

The primary cause of scale formation is decreasing solubility levels with increasing temperature. As the operating temperature of the boiler increases, the salts become more and more insoluble. No method of external chemical treatment is effective at the highest boiler operating temperatures. As the feedwater temperature is elevated to the operating boiler water temperature and concentrations, the solubility of the scale forming salts is exceeded and they crystallize in the form of scale on the boiler heating surfaces.

Boiler scale creates a problem in boiler operation because the heat conductivity of the scale is lower than that of the steel. The presence of scale is therefore equivalent to spreading a thin film of insulation across the path of heat transfer from the high temperature gasses to the boiler water. This will reduce heat transfer and cause a loss in boiler efficiency. Stack gas temperature may increase as the boiler absorbs less heat. Eventually, scale formation can cause tubes to overheat, warp and rupture.

8.4.2 Steam Purity or Carryover

Carryover is the term applied to the continuous entrainment in the steam of a small quantity of boiler water solids. In other words, the steam issuing from the steam drum carries droplets of boiler water (mechanical carryover) or vaporized salts into the superheaters and steam turbine. The sum of the mechanical and vaporous carryover is the total carryover.

If excessive boiler water is carried over in the steam, the solids in the water will deposit in the superheater tubes, non-return valves, piping, or the steam turbine. These deposits act as insulators in superheater heating surfaces allowing the tube metal temperatures to rise. They can create imbalances of the steam turbine rotor. Encrustations of governor valves may permit over-speeding, damaging the steam turbine. Serious damage to equipment and losses to efficiency may result.

The boiler drums are designed with mechanical separation equipment, which “dries” the steam by removing water droplets. Mechanical separation is not effective in controlling volatile or vaporous materials such as gaseous silica, ammonia, carbon dioxide, and other gases. Concentration of these materials must be controlled in the boiler water, as they cannot be removed from the steam. This is most important in the case of silica which can vaporize in the steam path at pressures above 1000 psig (68.9 barg).

The most common causes of mechanical carryover are foaming or priming in the boiler, or excessive water level in the drum. These situations will allow significant amounts of water to enter the steam separators, reducing their efficiency. Priming and foaming are always undesirable and may be dangerous, and their cause should always be quickly investigated and corrected. Consult the ASME Boiler and Pressure Vessel Code, Section 7, Care of Power Boilers for causes and corrective courses of action related to internal chemical conditions.

A secondary and very preventable cause of boiler carryover is loose or worn steam separation equipment. Periodic inspection of the drum internals can prevent expensive steam turbine repairs. Vogt Power’s Aftermarket Services can provide guidelines or inspection services.

If carryover is occurring, the superheater can quickly be fouled or damaged. Warning signs of excessive carryover include an increase in pressure drop across the superheater or a failed superheater tube.

8.4.3 Hideout

Hideout is a temporary or permanent disappearance of water treatment chemicals within a steam generator. Hideout can occur in any steam generator circuit or any component within a steam cycle. It can be caused by a variation of chemical and physical phenomena. Hideout is identified by a change in water pH or conductivity. The most widely recognized hideout form is a loss of phosphate.

Phosphate treatments are used in most drum-type boilers for pH control and protection against hardness. It is, however, difficult to control in transient situations. Hideout and variations in water volume can make it difficult to control the phosphate concentration.

Not all boilers experience phosphate hideout. Whether or not it will occur will depend on the relationship between phosphate concentrations, metal temperatures,

and the availability of concentrating sites and deposits. Minimizing deposits in evaporator tubes reduces phosphate hideout.

Excessive hideout is normally corrected by chemical cleaning followed by conditioning of the cleaned surfaces with phosphate until a stable film of magnetite is reformed on the tube surfaces. Even though alkaline treatment may be difficult to control in some instances, its effectiveness in controlling contaminants is not impaired and it can be used effectively in emergencies.

8.5 Internal Treatment of Boiler Water for Natural Circulation Units

After initial treatment of the feedwater, the boiler water needs internal treatment to maintain appropriate pH, TDS levels (total dissolved solids), silica concentrations, etc., through the entire system. Common methods include conventional phosphate, coordinated phosphate, congruent phosphate, chelant, and volatile. Consult a water treatment expert for the best method to use for the actual operating conditions of the HRSG.

The American Boiler Manufacturer's Association (ABMA) and the American Society of Mechanical Engineers (ASME) have both studied the water quality requirements of boilers for different pressures and heat transfer rates. Their suggested limits are shown in Table 8.1 for the operator's convenience.

Table 8.1 Recommended Boiler Water Limits and Associated Steam Purity

DRUM TYPE BOILERS AT STEADY STATE FULL LOAD OPERATION

DRUM PRESSURE PSIG	RANGE TOTAL DISSOLVED SOLIDS (1) BOILER WATER ppm (MAX)	RANGE TOTAL ALKALINITY(2) BOILER WATER ppm	SUSPENDED SOLIDS BOILER WATER ppm (MAX)	RANGE TOTAL DISSOLVED SOLIDS (3,4) STEAM ppm (MAX EXPECTED VALUE)
0 - 300	700 - 3500	140 - 700	15	0.2 - 1.0
301 - 450	600 - 3000	120 - 600	10	0.2 -1.0
451 - 600	500 - 2500	100 - 500	8	0.2 - 1.0
601 - 750	400 - 2000	80 - 400	6	0.2 - 1.0
751 - 900	300 - 1500	60 - 300	4	0.2 - 1.0
901 - 1000	250 - 1250	50 - 250	2	0.2 - 1.0
1000 - 2000	100	Note (3)	1	0.1

NOTES: (1) Actual values within the range reflect the TDS in the feedwater.
Higher values are for high solids, lower values are for low solids in the feed water.

(2) Actual values within the range are directly proportional to the actual value of TDS of boiler water.
Higher values are for the high solids, lower values are for low solids in the boiler water.

(3) Dictated by boiler water treatment.

(4) These values are exclusive of silica.

Source -- The American Boiler Manufacturers Association

8.6 References

Betz Handbook of Industrial Water Conditioning - Ninth Edition

"Boiler Water Quality and Steam Purity Recommendations for Water Tube Boilers" - 1980 - American Boiler Manufacturers Association

"COMBUSTION - Fossil Power Systems" - Third Edition - Combustion Engineering, Inc.

EPRI Report CS-4629 "Interim Consensus Guidelines on Fossil Plant Chemistry"

"STEAM -Its generation and use." - 40th Edition -The Babcock & Wilcox Co.

The ASME Handbook on Water Technology for Thermal Systems

Note: New editions of the above references may be available.

9.0 PERFORMANCE PREDICTION

9.1 HRSG PERFORMANCE PREDICTION

The HRSG is designed to recover energy from gas turbine exhaust gas to produce steam that meets the requirements of the steam turbine. Expected performance such as steam flow, pressure, temperature (for each pressure level) are predicted for certain gas turbine operating conditions based upon specific exhaust gas flow, exhaust gas temperature, exhaust gas constituents, fuel analysis, fuel heating values, etc., provided to Vogt Power.

Since the expected performance is based on specific operating conditions, it is unlikely the plant will spend much time running under exact design conditions. Over the lifetime of the plant, the gas turbine performance will degrade, creating lower gas flows and higher gas temperatures, and affecting the HRSG output. In addition, the HRSG itself will age, and develop some gas side and water side fouling, which will affect HRSG performance. Be aware that the expected performance provided in this manual reflects a “new and clean” condition, and will not exactly match the day-to-day performance over the life of the unit.

9.2 IMPACT OF INDIVIDUAL PARAMETERS ON DESIGN AND PERFORMANCE

Unlike the input parameters for the design of a conventional boiler, the input for the HRSG is neither constant nor well defined. The GT flow and temperature cannot be regulated by the output demands of the HRSG because the GT itself is required to meet its own efficiency and electrical output. Even if the GT output is held constant, its exhaust conditions change as the ambient temperature changes and as the equipment ages. As the exact measurement of GT flow is difficult, it must be estimated based on correlations derived through tests. An HRSG whose design is based on estimated values may not perform as predicted, even if it is possible to meet the exact design conditions.

This section discusses the various parameters that affect the HRSG design, the probable errors in measuring their values, and the effect of each on the performance of the HRSG. Based on the information given, it is possible to develop an operating envelope for the HRSG.

The variables which influence the HRSG performance can be categorized as input, design and output variables. Input variables consist of:

Gas Turbine Exhaust Flow
Gas Turbine Exhaust Temperature
Gas Turbine Exhaust Constituents
Feedwater Temperature
Blowdown Rate
Steam Pressure
Burner Firing Rate

Design parameters which are either assumed or calculated include:

HRSG Geometry
Heat Transfer Coefficients
Gas Leakage
Thermal Losses

Output variables which influence the HRSG are:

Steam Temperature
Steam Quality
Variation in Operating Points

9.3 PARAMETER EFFECTS

The following paragraphs discuss the effect of each parameter on the HRSG performance, treating each parameter separately. The effect of changes in several factors taken in combination may not be completely predictable.

9.3.1 GAS TURBINE EXHAUST FLOW

In the design phase, gas turbine exhaust flows provided to VPI will generally include the base load ISO condition and corrected flows for the site conditions at base load. However, since an accurate measurement of GT exhaust flow is very difficult, a best estimate is obtained based on air and fuel measurement. In a typical gas turbine, the velocity may vary from 0% to about 300% of the average velocity across the GT outlet cross section. An HRSG designed for the estimated gas flow may not perform as predicted even if the design conditions are duplicated because the velocity distribution may lead to a different flow distribution through the tubes. Figure 9.6.1 shows the effect of changes in the gas flow rate on the steam flow and steam

temperature. The expected percent change in steam flow is equal to the percent change in gas flow.

The temperature of the superheated steam changes by about the same number of degrees Fahrenheit as the percentage change in the gas flow but in the opposite direction. A decrease in GT exhaust flow will lead to an increase in the steam superheat temperature.

9.3.2 GAS TURBINE EXHAUST TEMPERATURE

GT Exhaust Temperature, like exhaust flow, is difficult to measure, and the values given for the HRSG design will be best estimates only. Exhaust temperatures will vary by about 50°F-100°F (28°C-56°C) across the GT outlet duct cross section. An HRSG may not perform as designed because of maldistribution of GT temperature. As Figure 9.6.2 shows, both the steam flow and steam temperature change in the same direction as the change in GT exhaust temperature. An increase of about 5°F (3°C) in GT exhaust temperature increases the steam flow by 1% and increases steam temperature by about 2°F (1°C).

9.3.3 COMBUSTION TURBINE EXHAUST CONSTITUENTS

Gas turbine exhaust constituents, particularly the moisture content, are an important factor in the design and performance of an HRSG. Higher moisture content increases the gas enthalpy, which results in more heat available for the same temperature exhaust gas. The net result is more heat transfer for the same surface. Figure 9.6.3 shows the steam output variations based on the change in gas moisture content. For each 1% increase in moisture content, the steam flow increases by about 0.75% and the steam temperature decreases by about one-half a degree.

9.3.4 FEEDWATER TEMPERATURE

Feedwater temperature changes have a very minor influence on the steam output. As Figure 9.6.4 shows, a 10°F change in feedwater temperature changes the steam flow by about 0.1% and the steam temperature by about 0.1°F. There are two primary reasons for the low impact:

Feedwater heating is a small portion of the total HRSG duty.

The change in feedwater temperature changes the economizer section duty and the log mean temperature difference (LMTD) but in different directions,

which compensates the heat transfer surface area requirements to certain extent. For example, a 10°F (5°C) decrease in feedwater temperature increases the duty by about 4%, but increases the LMTD by about 3%. The net result is about 1% deficiency in the economizer surface. Since the economizer surface is a small part of the total surface, the total surface deficiency is much less and the effect on steam output is very minimal , as shown on Figure 9.6.4.

9.3.5 BLOWDOWN

Generally, blowdown is specified as a percentage of total feedwater flow. More blowdown means more loss of treated water and more loss of heat, which affects steam generation. However, the effect on steam flow is not very significant. As Figure 9.6.5 shows, doubling the blowdown from 4% to 8% changes the steam flow by about 0.8% (from 0.9% to 1.7%). Steam temperature is decreased 0.5°F.

9.3.6 HEAT TRANSFER COEFFICIENT

An exact calculation of the heat transfer coefficient is very difficult because of the large number of variables involved. Calculations are considered acceptable if they can predict the heat transfer coefficient within ±10% to 15%. Because of this margin, it is possible to have a discrepancy of about 10% to 15% between the actual and required surface areas of an HRSG. Designing the HRSG with more surface to cover for this discrepancy may not solve the problem; in a multi-section HRSG providing more surface in one section generally results in less heat available for the next section (increasing HP steam production decreases IP steam production). It is also possible that a correlation may predict good values for the heat transfer coefficient with design conditions but may give lesser or higher values at off design points. Figure 9.6.6 shows the effect of heat transfer coefficient on the steam flow. A 10% change in predicting the coefficient results in about 0.75% change in steam supply and about 10°F change in steam temperature. However, unlike the effect of other variables, which result in higher steam temperature for lower steam flow, the decrease in heat transfer coefficient produces both lower steam flow and lower steam temperature.

9.3.7 LEAKAGE

Due to pressure drop through the HRSG, the exhaust gas coming out of the gas turbine is under pressure and there is a possibility that it may leak out of the HRSG or expansion joints instead of going through the heat transfer

surfaces. Leakage generally occurs around inspection doors and other openings, as the HRSG design uses all-welded construction. This factor needs to be taken into account in the design phase only, as pressure variation from design conditions to the site conditions is very insignificant. The effect of leakage, as shown in Figure 9.6.7, is the same as that of a change in GT exhaust flow.

9.3.8 RADIATION AND OTHER LOSSES

All boilers lose heat to the atmosphere by heat transfer from the casing surface. HRSGs generally lose more heat than conventional boilers because they have more casing surface area compared to the amount of heating surface, particularly in the ducts. As in the case of other design variables, the heat loss should be taken into account while designing the HRSG. However, since the gas temperature at off-design points may be different than at the base load this may result in different heat loss. The effect of the loss as shown in Figure 9.6.8 is to decrease the steam output.

9.3.9 STEAM PRESSURE

The steam pressure is more significant than other input variables because in the operating phase the steam flow and temperature will be determined by the GT inputs and the effective surface available. Generally, the steam pressure will not vary if the steam is going to a process steam header. However, the pressure can vary significantly if the steam is used for a steam turbine with a sliding pressure requirement, or for a multiple processes with variable steam requirements. Steam flow and temperature changes due to outlet pressure variation are shown in Figure 9.6.9.

9.4 SUMMATION

The preceding paragraphs indicate that the most critical variables which influence the HRSG performance and which are beyond the control of the HRSG designer are GT Exhaust gas flow, GT exhaust gas temperature and the moisture content of the gases.

In general, the steam flow at a given GT load varies from +6.0% to -3.0% due to the tolerances in the input variables. The error margin increases with the decrease in GT load but remains constant with the change in the ambient conditions.

The steam temperature is affected considerably by changes in the GT load or ambient conditions. However, the effect of tolerances in the input variables is not very pronounced and it is generally of the order of +10°F (5°C) to -10°F (5°C). Figure 9.6.10

and Figure 9.6.11 show the cumulative effects of the error margins in the input variables for various ambient conditions and loads.

9.5 RECOMMENDATIONS AND CONCLUSIONS

An HRSG is designed based on the input variables as supplied by the GT manufacturer. Each of these variables changes with ambient conditions, GT load, steam turbine performance and equipment age. If steam output changes considerably from the predicted value, the HRSG and associated equipment should be examined to find a cause. It may be possible to make repairs or modifications to restore the plant to the expected operating range. The difficulty lies in deciding how much of the output deficiency can be attributed to input variables, and how much must be attributed to normal aging and degradation of the HRSG, GT, ST, and other plant equipment.

VPI can provide a “black box” program to aid the plant staff in determining expected performance at different operating conditions, based upon the gas turbine and steam turbine expected performance. This can be especially useful when major changes to other plant equipment are planned. Please contact VPI’s Aftermarket Services department for details.

9.6 FIGURES

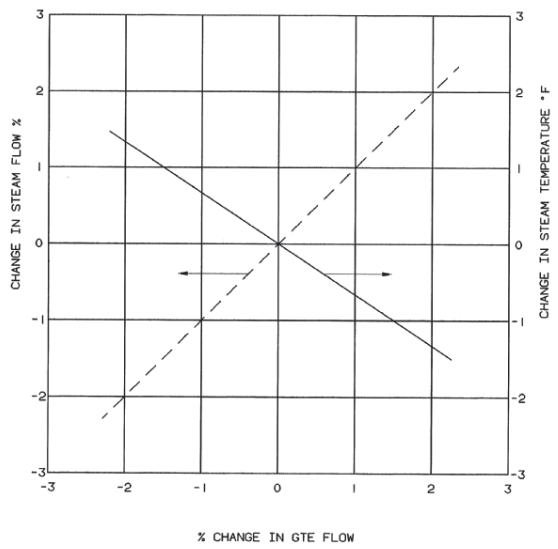

Figure 9.6.1

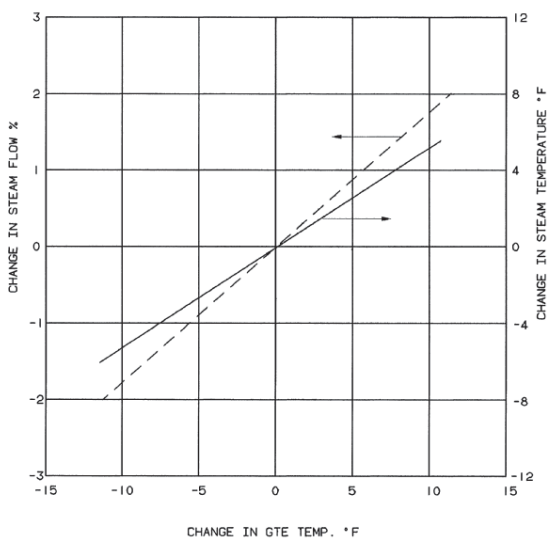

Figure 9.6.2

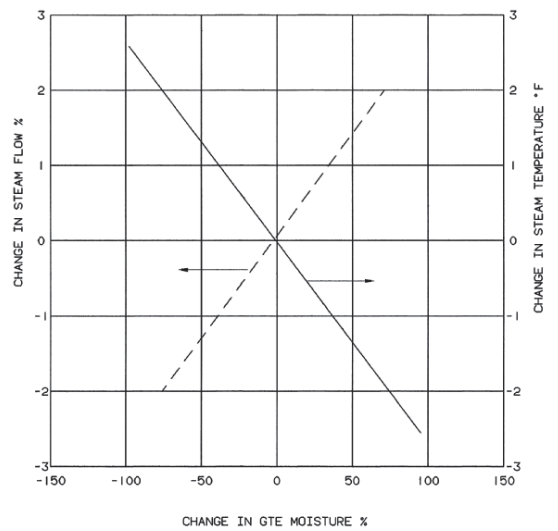

Figure 9.6.3

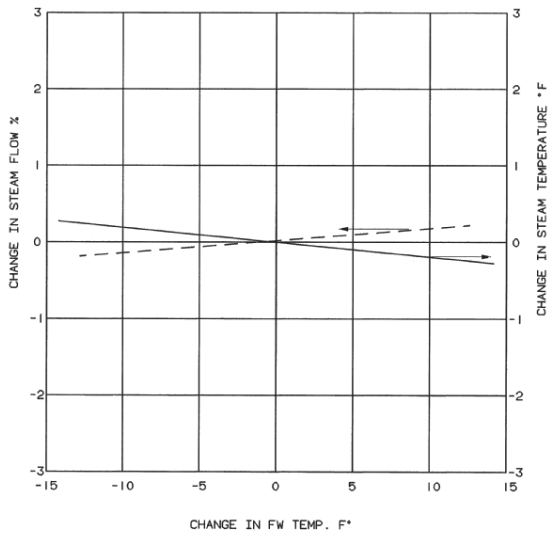

Figure 9.6.4

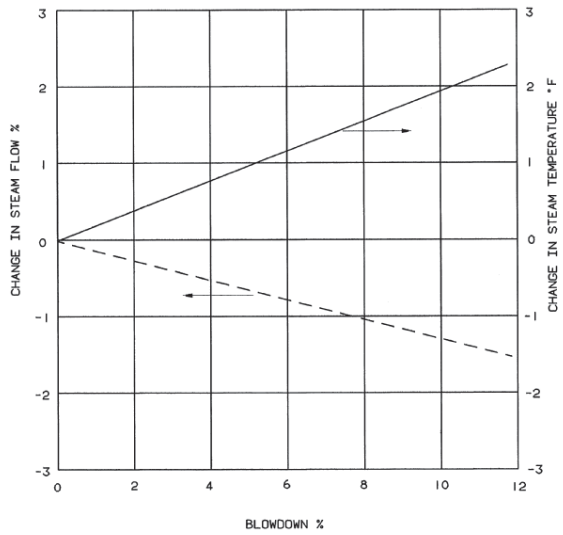

Figure 9.6.5

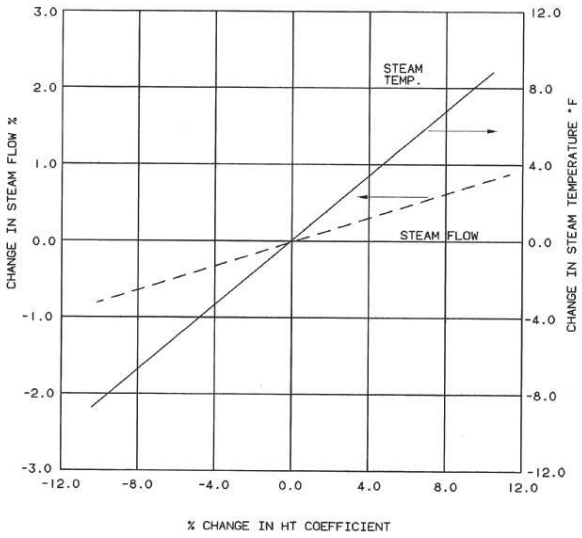

Figure 9.6.6

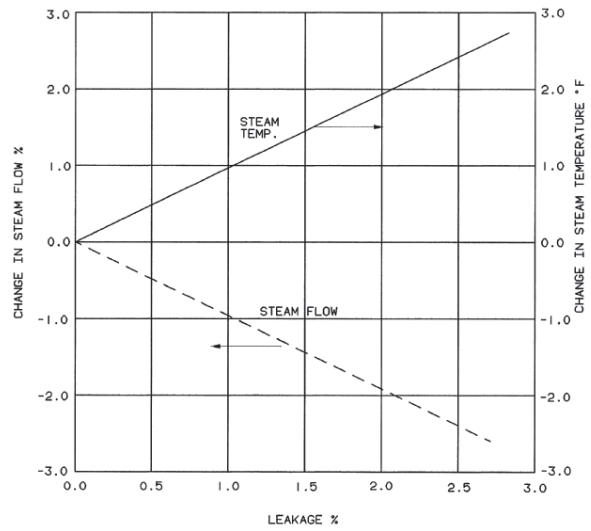

Figure 9.6.7

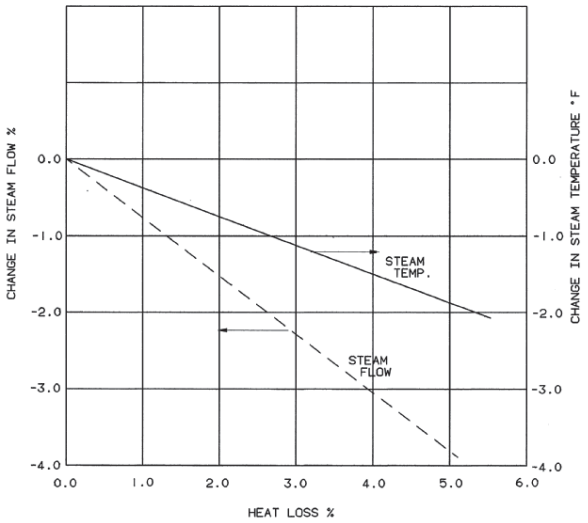

Figure 9.6.8

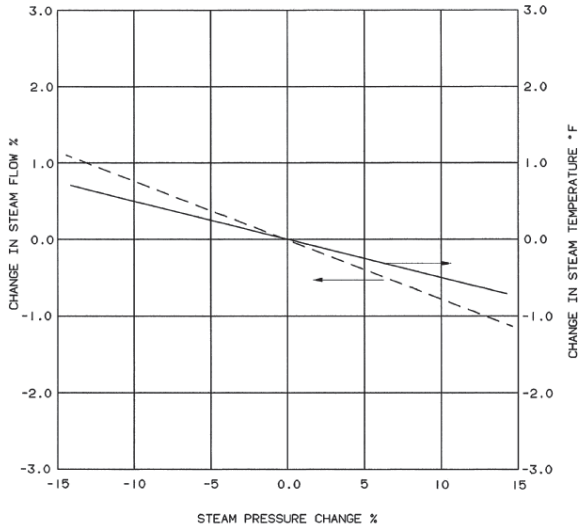

Figure 9.6.9

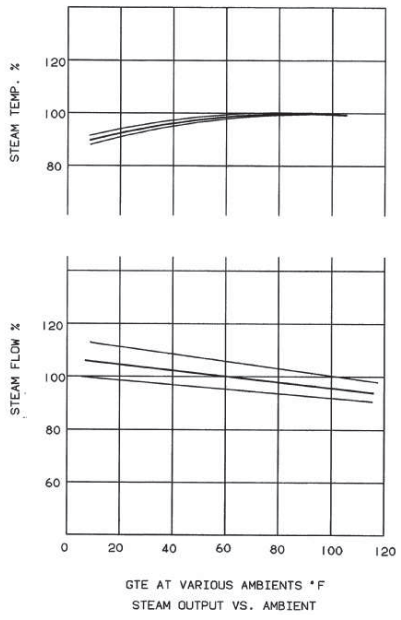

Figure 9.6.10

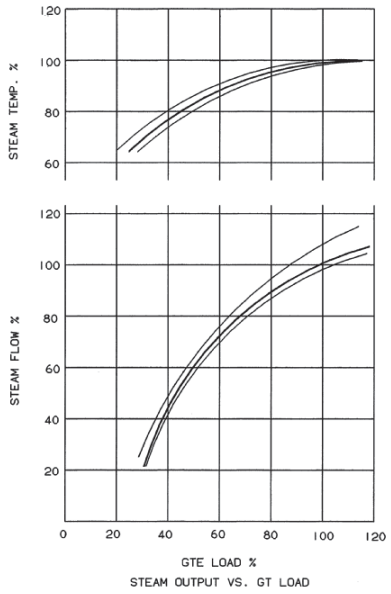

Figure 9.6.11

1.0 SAFETY PRECAUTIONS

Safety is everyone's business. This section's purpose is to inform the operators of the potential risks associated with the operation and maintenance of the Vogt Power HRSG.

NOTE: This section contains suggestions for safe operation and maintenance of the Vogt Power HRSG. This section shall not be considered as a safety standard or procedure. Minimum requirements are presented for the benefit of the reader, but this section is not intended to be all inclusive.

Proper installation, operation, and maintenance are essential for safe and reliable HRSG operation. The performance of the required tasks for HRSG operation and maintenance will require personnel to be in the proximity of fluids and materials at high temperatures and pressures. Precautions taken should include, but not be limited to, hearing protection, eye protection, protective clothing (i.e., gloves, hard hats, long sleeve shirts) as required for the task being performed. Due to the various circumstances and conditions in which plant personnel may be working and the consequences of each, Vogt Power cannot possibly evaluate all conditions that may injure personnel or equipment. Nevertheless, the following safety precautions are offered for plant personnel information only.

It is the purchaser's responsibility to ensure that the unit has been inspected and approved by the appropriate and applicable regulating authorities, including state regulators and his insurance company.

1.1 HRSG ACCESS

When entering ductwork or boiler casing through access doors for routine maintenance or inspections, ensure that the environment has been checked for man-safe conditions. Verify temperatures are not excessive, and that environmental gases are not be tainted with exhaust fumes or potentially hazardous material. When entering the cavity, look around to be sure there are no loose liner panels or other boiler components overhead. Never enter the boiler without complying with OSHA'S confined space entry requirements.

Extended outages for major HRSG upgrades or maintenance require a lock out of the GT from operation. Under no circumstances should the gas turbine have any chance of operation when personnel are inside the HRSG for inspection or maintenance.

After safe entry has been gained, ensure adequate lighting and ventilation have been installed to perform the task.

When entering steam drums, operators should mechanically ensure that drum access doors cannot be inadvertently closed, trapping personnel inside.

In inclement weather, operators should be aware of slick grating or icicles on the platforms external to the HRSG enclosure.

Operators should be alert for grating not properly fastened down. Loose grating can result in tripping hazards.

When the HRSG is in operation, never touch an exposed piece of process pipe or tubing without first testing for temperature.

Do not touch the HRSG casing while in operation without first testing with an instrument. Note that discolored areas on casing are indicative of hot spots. These can indicate insulation system failure.

1.2 VALVES AND INSTRUMENTS

Never repack or perform maintenance on a valve while it is under pressure unless a special procedure exists (i.e., setting of safety valves) and qualified personnel are performing the task.

Always be sure that all safety relief valves are in working order prior to start-up.

CAUTION: HRSG OPERATION WITH ANY SAFETY RELIEF VALVE IN NON-OPERATIONAL CONDITION COULD CAUSE SERIOUS INJURY AND EXCESSIVE DAMAGE TO HRSG PRESSURE PARTS.

When replacing instrumentation, always isolate the instrument with the root valves and remove pressure with instrument vent or blow off line. Do not try to repair an instrument while it is under pressure.

1.3 INSULATION

Repair damaged insulation and lagging as soon as possible, particularly in areas where personnel could be injured (i.e., near aisles, areas easily reached from platforms, ladders, stairs or grade, etc.). The casing insulation specified by Vogt Power is non-asbestos bearing mineral wool or ceramic fiber.

1.4 INSTRUMENT LINE BLOWNDOWN

When blowing down an instrument sensing line, hot water and steam will be discharged. Instrument sensing lines (normally not insulated) will be heated to high temperatures during blowdown. The area should be safe-guarded until lines have cooled. Note that excessive blowdown of transmitter lines will expose the transmitters to excess temperature and cause premature failure.

CAUTION: OPERATING GAGE GLASS VALVES INCORRECTLY CAN CAUSE DAMAGE TO GLASS PORTS AND RESULT IN SERIOUS INJURY.

Follow guidelines as described in Vendor manuals found in the Vogt Power HRSG Operantion and Maintenance Manual Volume IV.

When examining high pressure steam Lines for leaks, extreme care should be used, particularly if the leak is heard but not seen. Use a probe such as a 2 x 4 or broom handle when searching for leaks.

2.0 SUGGESTED OPERATIONAL PROCEDURE

2.1 As soon as possible during start up, place each feedwater regulator on automatic. Check the drum water level frequently. Never depend entirely upon automatic alarms or feedwater regulators to maintain evaporator drum water levels within required range. If drum water levels increased gradually, the boiler feedwater control valve(s) may be leaking. The most important rule in the safe operation of a natural circulation evaporator is to keep the water as near the design level as conditions will permit.

2.2 Normal practice is for the incoming "HRSG" operator to check the water column drains by blowing down the drains upon entering the boiler operations area in the beginning of each shift. More frequent blowdown may be necessary when trouble is experienced with boiler compounds, foaming, priming, and other feedwater trouble. Make provisions to "bypass" any low water sensors on gauge glass columns which may be tripped while blowing down the gauge glasses and water columns. Experience may indicate that blowing down less frequently is desirable. This should be worked out between the boiler operator, feedwater consultant, and the insurance inspector.

2.3 The water columns should be well-lit and the glasses must be kept clean. Do not allow steam or water to leak from the water column or gauge glass connections, as this will cause the gauge glasses to show a false level.

2.4 In normal operation, each safety valve should be checked periodically to insure that it is open and free, usually by raising the steam pressure until the safety valve pops, or by raising the valve disc, gate, or plug from its seat by hand (when pressure is greater than 75% of set pressure) on boilers operating below 600 psig (41.4 bar).

For pressures higher than 600 psig (41.4 bar), "lift assist" devices are available to check the popping or opening pressure of the safety valve without raising the boiler above the normal operating pressure. This hydraulic lift assist device can ensure that the set point is accurate but cannot check the valve for full lift nor does it provide data concerning blowdown; therefore, valve performance cannot be verified. Lift assist devices can only be used on valve designs that permit their use. The valve manufacturer should be contacted for the tools and technician to check the operating pressure and assist in restoring the valves to "safety valve standards" before the boiler is commissioned (See TAB II, Section 7, Paragraph 7.13).

2.5 Perform all boiler water and boiler feedwater tests as directed by your feedwater consultant. Adjust operations accordingly.

2.6 Operate the continuous blowdown valves as indicated by the boiler water tests to maintain the concentration of boiler water solids shall remain within the permissible limits (See Section I, Tab 8).

2.7 Blow the boiler down through the bottom (intermittent) blowdown valves once each eight (8) hour shift. In blowing down, follow the instructions on the valve. For valve sets, the valve next to the unit (root valve) should be opened first and closed last. Blowdown should result in a maximum water level decrease of 1/2" (12.5mm). Both valves should be closed tightly. If a blowdown valve leaks, repair it as soon as practical. Leaking valves can be detected by checking the discharge line temperature before blowing down.

2.8 The efficiency and capacity of a boiler depends upon maintaining its cleanliness both internally (water side) and externally. The cleanliness of the water side should follow the dictates of your water consultant, which should not vary much from the "Suggested Feedwater and Boiler Water Guidelines" as given in Section I Tab 8.0.

2.9 When the unit is opened for periodic inspection and general repairs, internal surfaces should be carefully examined. If any accumulations are noted, they should be removed and the reason for the accumulation determined, and if possible, corrected.

2.10 Should small casing leaks occur, locate their source, and repair as soon as possible. Some leaks can be repaired while the unit is on line. Contact Vogt Power's Field Service Department for assistance.

2.11 If a serious leak occurs in any pressure part, shut down the unit immediately. Have the failure examined by an authorized inspector and repaired before returning to service.

2.12 Do not allow water leakage to occur at manways and handholes. If a leak is discovered, replace the gasket and refinish the seating surfaces as soon as possible.

Repairs should never be made to any pressure part of the boiler piping, or appurtenances while under pressure (except in tightening valve packing). Steam leaks in the high pressure boiler system can cause serious injury.

2.13. A frequent check of the deaerator operation should be made to determine if oxygen content of the water being supplied to the system is at 7 ppb or less. If O2 content is higher, corrective action must be taken.

3.0 REMOVAL FROM SERVICE, LAY-UP, AND LONG TERM STORAGE

This section provides general recommendations and is not intended to be an operating instruction. Internal protection is required if the steam generator is to be out of service for more than 24 hours.

For any shut down period, the base of the stack should be cleaned of all debris and the stack drain line valve opened. If moisture is allowed to remain within the "gas side envelope," exterior surfaces of the pressure parts will rust. If this is allowed to continue for enough time, pressure part failure will occur.

A wide variety of boiler shutdown / lay-up procedures are in use with combined cycle plants.

3.1 PLANNING THE SHUTDOWN / LAY-UP

When it is time to remove an HRSG from service and place it in storage, a decision must be made regarding:

- How long it is to be stored?
- What service is expected to be available during storage, such as steam, nitrogen (N_2), and treated water?
- Will there be a danger of freezing?
- Will operators be around the unit to check an operation of SRV's, traps, and sump pumps?

Decide if the boiler is to be removed from service for a short period (hours) or an extended period (days or weeks) of time.

3.2 HRSG SHUTDOWN

Reference Section I, Tab 5 for shut down procedures.

The following general considerations should be observed when shutting down the unit:

- Do not feed cold water into a hot boiler. This practice can result in failure of metal parts due to thermal stress.

- Do not let the boiler(s) stand partially filled with water for several days. Oxygen (O_2) corrosion will be the end result, usually in the form of pitting.
- Take the boilers out of service by standard shutdown methods to repair pressure parts, when possible. Emergency shutdowns should be avoided, as they result in high thermal stresses that will reduce the operational life of the boiler.
- Make every effort to keep oil out of the boilers. Oil contamination will cause foaming on the drum water surface, making it impossible to accurately measure drum water level. If oil does enter the water side accidentally, consult your water consultant for corrective measures.
- Clean the water side of the HRSG as required by the water advisor or inspector before returning to operation. Be sure that the water advisor has access to drawings of the HRSG and these instructions.
- The superheater(s) will become condenser(s) as the boiler(s) cool. Each superheater module will fill with condensate and this will require the addition of feedwater to the boiler to supply the condensate. This is normal. When restart time comes, you may drain the condensed water into a feedwater storage tank as it is good water.

3.3 WET LAY-UP - NITROGEN METHOD

When HRSG units are used in cyclic operation, long time storage methods cannot be used. In this application, the following should be considered.

3.3.1 Stored Energy

The large mass of steel and water inside the HRSG means that there is a large quantity of stored energy available in the HRSG boiler after shutdown. By minimizing the draft through the HRSG by use of an outlet damper, this stored energy may keep the unit warm for 24 hours or more.

Pressure in the HRSG can drop rapidly if the stack and duct are opened to allow cool air to circulate through the gas side of the boiler. If the HRSG is bottled up so that outside air cannot circulate, it will stay warm for a longer period. However, the boiler will not remain static while bottled-up.

3.3.2 Pressure Equalization

If the HRSG is bottled up so that outside air cannot circulate, the entire HRSG will try to equalize in temperature as higher temperature sections transfer heat to lower temperature systems.

For example, if the low pressure boiler has been operating at say 5 psig (.34 bar), the temperature will be about 225°F (107°C). The average temperature of the HP economizer may be about 315°F (157°C) and the high pressure boiler may be approximately 550°F(287°C). If the unit is "bottled-up", heat would transfer from section to section until temperatures equalized at about 325 psig (22.4 bar) or 425°F(218°C). This will vary due to how fast the stack is capped and the ambient temperature. These pressures will over pressure the LP system and set off the LP boiler safety valve.

Operation by the operators will be required to keep the LP (and possibly IP) safety valves from popping during hot shutdown.

3.3.3 Stratification

In addition to temperature and pressure equalization within the multi-pressure unit, as soon as natural circulation ceases the system will stratify (see Section I, Tab 2 for a discussion of natural circulation). Without circulation, the hottest boiler water will move to the top of the tubes and drums while cooler water will gravitate to the lower headers and tubes. This is natural and should be of no concern unless the ambient temperature is below freezing and the stack is not capped.

3.3.4 Field Testing

The best plan is to try a set of conditions and record all data affecting the shutdown. If after the "off period" the HRSG still has positive pressure, a re-start can be made by draining the superheater and adjusting the water level in the drums.

3.3.5 Re-Start

With the water levels adjusted and the condensate drained from the superheater(s), re-start the CT. Quickly open each blowdown valve for a

two (2) second blowdown and bring the unit up on automatic control. Monitor water levels and flow during the re-start.

3.4 WET LAY-UP – CHEMICAL METHOD

Under the wet lay-up method, the boiler is held full of water, which is treated to render it non-corrosive. At least thirty (30) minutes before the boiler comes off line, the appropriate chemicals should be added in order to properly distribute them throughout the system prior to shut down. Due to the natural circulation design of Vogt Power HRSGs, it is not possible to circulate water through the tubes during standby periods.

Consult a qualified water treatment professional for the appropriate chemicals and concentrations.

In order to keep the internal boiler services properly protected, follow these guidelines:

3.4.1 Provide an expansion drum or tank above the top of the steam drum and fill unit to that level.

3.4.2 On units with superheaters, a nitrogen (N_2) blanket at approximately 5 psig (.34 bar) can be used on top of normal water level to prevent oxygen pitting.

3.4.3 To prevent corrosion, all water columns and gauge glass valves should be open as required for normal service and all drain valves should be closed.

Should an idle boiler be subject to freezing temperatures, the foregoing, will not apply. In such cases, the unit must be completely drained.

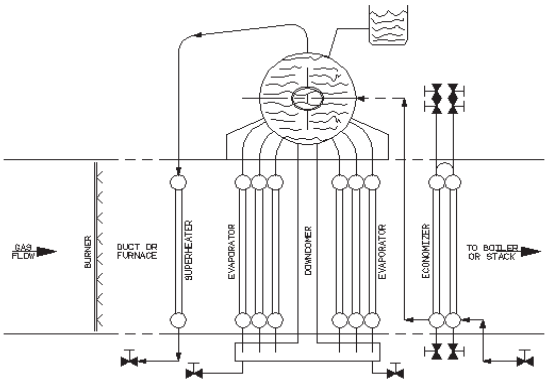

TYPICAL BOILER LAYOUT

3.5 HOT-DRY STEAM LAY-UP

Under the hot-dry method, the boiler and internal liner are kept warm by admitting live steam of available pressure into the steam drum. The required time to put the unit back into operation is kept to a reasonable minimum. The following steps are required under this method:

3.5.1 Drain all water from the unit. This includes the HP, IP, and LP economizer.

3.5.2 Install a steam trap so as to drain condensate at all superheater, evaporator, and economizer drain connections, or cycle the drains periodically. Automatic superheater drains may be used if provided.

3.5.3 Connect the necessary steam supply piping and condensate return. This is "good" water and should be recycled.

3.5.4 Admit the available steam into the steam drum. Steam pressure as low as 15 psig (1 bar) may be used.

3.5.5 Block air flow at all stacks and close all access doors to reduce steam consumption.

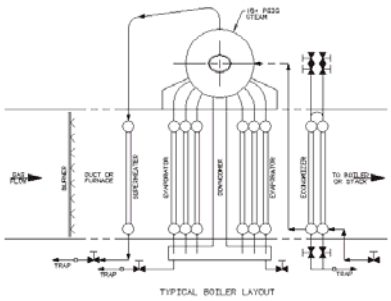

TYPICAL BOILER LAYOUT

3.6 DRY LAY-UP – CHEMICAL METHOD

If the potential for freezing exists during lay-up, a dry lay-up method is required. When a boiler is to stand idle in an exposed location for any indefinite period, it should be drained completely, being particularly careful to blow or otherwise remove all water from such places in drums, tubes, headers, superheaters, water columns, gauge glasses, etc.

3.6.1 Shallow pans, contrived to expose as much surface as possible, should be partially filled with calcium chloride or Silica gel desiccant and inserted in the "HRSG" boiler drum. Manway covers should be tightly shut, all vents and drains closed, and the boiler made as nearly "bottle-tight" as practical.

3.6.2 The calcium chloride or Silica gel is intended to absorb moisture entrained in the boiler atmosphere and should be examined and replaced or regenerated periodically.

3.6.3 Add a low pressure (5 psig / .34 bar) N_2 blanket in addition to the desiccant to further prevent oxygen attack on the water side.

3.6.4 A household type electric drive dehumidifier may be used to remove the moisture from air on the water side of the boiler in lieu of chemicals. This has the dual advantage of draining moisture to the outside and warming the air, further reducing corrosive conditions.

3.7 HOT-WET LAY-UP

Under the hot-wet method, the boiler water level is maintained close to low level but not low enough to sound alarms. Steam pressure is maintained. Proceed as follows:

3.7.1 If the boiler has been on line, increase the blowdown to reduce both suspended and dissolved solids to approximately 50% of normal operating levels. If boiler has not been on line, fill with hot deaerated boiler feedwater with "adjusted" 0_2 scavenger and alkalinity to maintain a protected boiler surface. Consult your boiler water consultant.

3.7.2 Inject steam into the evaporator using a sparging line in the lower header. Sparging line and connections can be added to an existing unit if this procedure is selected after initial installation. If the economizer is too large to heat by convection, circulate boiler water from the boiler into the boiler feed line.

3.7.3 Drain excess water from the unit as required based on the level indicators.

3.7.4 The stack can be capped to reduce steam demand if a stack damper is not installed.

3.7.5 Heat trace all non-heated lines, if required, to protect from freezing. Remember that circulation is very low, there is no guarantee that warm water will find it's way into closed off lines.

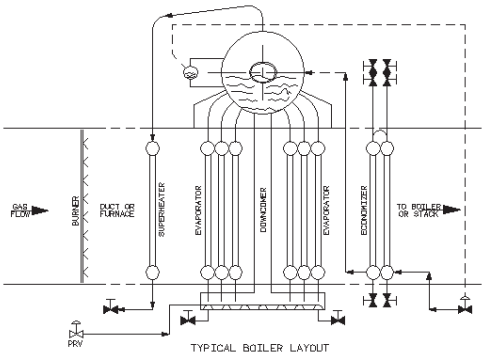

4.0 TUBE FAILURE ANALYSIS

This section is a basic guide to some of the more typical types of tube failures found in HRSG's. The first part describes how to take a tube sample. The second part gives a written description of some different types of failures. The last part illustrates various methods for tube failure repair.

4.1 How to Remove a Tube Sample for Inspection

It sometimes becomes necessary to remove a tube sample from the HRSG heating surface areas for a waterside inspection, or to be sent out for analysis. Certain procedures should be followed to insure that the sample is removed intact, and that it is documented as to its exact location.

When removing a tube sample:

4.1.1 The tube section should be saw-cut to prevent any slag from flowing inside the sample or the good section of tubing.

4.1.2 The sample should be documented 8 inches (203mm) to 10 inches (254mm) above and below the affected area.

4.1.3 The exact location should be documented as follows (See Figure 4.1):

4.1.3.1 Tubes should be numbered and counted from left to right and inlet to outlet of HRSG.

4.1.3.2 The module, row, and elevation should be noted and marked on the tube.

4.1.3.3 An arrow should be marked to indicate which end of the sample is up.

4.2 Types of Failure

The key to analyzing a tube failure is to obtain every piece of information as to what, when, where, to what extent surrounding the failure, in addition to the failure itself. Wide open tubes are not necessarily the result of overheat. Blisters do not occur because of defective tubes. Perfectly clean, non-restricted HRSG tubes have failed from short term overheat.

It is not difficult to analyze tube failures with sample and backup data. Only a limited number of failure types require lab micrographs to determine cause, such as hydrogen embrittlement and caustic stress corrosion.

4.2.1 Tube Leaks

4.2.1.1 The cause of a tube leak can be either design or operation oriented. The object is to determine the problem and apply the appropriate remedy.

4.2.1.2 Tube leak causes can be classified as mechanical problems, excessive temperatures, or corrosion mechanism.

4.2.2 Plugging of Reheater and Superheater Headers Due to Exfoliation

Flakes of exfoliated metal from the reheater and superheater tubes may lodge in the headers and form partial or complete plugs. When the headers become plugged, flow is restricted and tubes may fail due to overheating and swelling. Exfoliated metal can also cause turbine erosion.

4.2.3 Chelant Corrosion

Chelant corrosion, or stack, develops when excess concentrations of sodium salts are maintained over a period of many months. Chelant corrosion dissolves or thins the tube, but does not cause pitting. Damage will be concentrated in areas of stress, causing thinning of rolled tube ends, threaded members, baffle edges and other unrelieved stress points.

4.2.4 Oxygen Pitting - Economizer

Excessive oxygen in the feedwater can lead to small pits and corrosion of metal on the waterside of economizer tubes. Proper deaeration of feedwater is absolutely essential for protection of the economizer.

4.2.5 Hydrogen Attack or Damage

This type of failure is found in high pressure units generally above 1800 psig (124 bar). Hard dense scale forms on the tube waterside surface allowing hydrogen to concentrate under the deposit and permeate the metal. The hydrogen reacts with the carbon of the metal to form methane, which has much larger molecules than the carbon atom. This exerts pressure, and causes the metal to rupture from within. Ruptures are violent, sudden, and

can be disastrous. Ruptures take the form of a thin opening with thick edges along the axis of the tube.

4.2.6 Failures Due to Scale

4.2.6.1 Long Term, Creep Failure is caused by a build up of internal scale, which acts as an insulator, causing a gradual increase in the operating temperature of the tube metal. The tube appears swollen with a blister or bulge. The outside surface may have an elephant hide appearance. Ruptures are thin openings along the axis of the tube, which generally have thick edges.

4.2.6.2 Short Term Overheat Failure

A rapid elevation of the tube metal temperature caused by inadequate water supply to the tube (starvation) can result in a wide rupture. The edges of the ruptures are thin and sharp. In the superheater, a short term overheat could result from a blockage of steam flow.

4.2.6.3 Oxygen Pitting (Superheater) is usually found in the tight loops of the superheater module. It is caused by water or condensate which forms in the bends after shutdown working with oxygen in the air. It manifests as pitting and corrosion of the metal close to the out of service water level in the superheaters.

4.2.6.4 Exfoliation is found in high temperature sections, such as reheaters and superheaters, which have been exposed to metal temperatures over 950 °F (510°C) and have seen a number of temperature cycles. The most common area for exfoliation is the outlet legs of the reheater or superheater. Exfoliation appears as a flaking of metal scale on the inside of the tube.

4.2.7 Overheat

4.2.7.1 Long Term
- Low temperature for a long time, generally less than 1200°F (649°C) to1300 °F (704°C)
- Almost no swelling of the tube
- Tree bark texture on the outside of the tube
- Slow degradation of grain boundary strength.

- Sometimes considerable carbureted build-up or metal loss.

4.2.7.2 Intermediate Term Overheat is characterized by:
- Moderately high temperatures, generally 1300°F (704°C) to 1600°F (871°C)
- General swelling indicative if accelerated creep –or-
- Slight bulges or knots

4.2.7.3 Short Term Overheat is characterized by:
- Temperatures above 1600°F (871°C)
- Swelling is always apparent
- Knife edge openings in carbon steels. Note that chrome steels and stainless, although swollen, will not produce knife edges.

4.2.7.4 Causes of overheating include the inability of tube to transfer heat to the cooling medium due to scale impeding heat transfer, and the inability of tube to transfer heat to cooling medium due to plugging or other stoppage of cooling medium flow.

NOTE: Ninety-five (95) percent of superheater short term overheats occur during start-up or operation below 20% GT load.

4.2.8 External corrosion can be caused by oil ash (sulfur-vanadium attack at high temperature, out of service or low temperature sulfur (H2SO3) attack and caustic gouging (leaking tube seat).

4.2.9 Internal corrosion can be caused by oxygen pitting, concentration cell corrosion, under deposit alkaline attack, caustic corrosion in austenitic stainless steel, caustic stress corrosion (inter granular shear face), and hydrogen embrittlement ($2H_2 + 1 C \Rightarrow CH_4$ at grain boundaries)

4.2.10 Mechanical Corrosion can include stress tears (tube failures on a 45° shear plane), fatigue, such as circumferential cracks straight across tube thickness, trans granular shear face, or cracks propagating from the outside in, and erosion, which causes thinning of the tube with no swelling.

NOTE: Most tube fatigue failures end in stress tears as do some short term overheats. The reaction force from the escaping medium, plus a stress concentration at the end of a crack produce tearing.

4.2.11 Tube Defects

4.2.11.1 Tube defects in welded tubes can be caused by lack of fusion in welds or non-homogeneous skelp (strip that is formed into tube).

4.2.11.2 Tube defects in seamless tubes can be caused external or internal laps, imperfections or inclusions in the steel, and by non-concentric center or oval center. Note that due to the drawing process, it is virtually impossible to produce a non-circular tube O.D. Any tubes with an oval O.D. should be suspected of physical deformation or overheat.

4.2.12 Reporting Failures

Please include the following information when reporting failures to VPI:

- Where exactly in the boiler, with sketch
- Start-up related information - or - Operation information
- Date/time of discovery
- How discovered
- Description, sketch, and photos
- Possible cause
- Extent of damage
- Repair procedures
- Hydrostatic test results

4.3 Recommended Tube Leak Repair Procedure

In the unlikely event a tube leak occurs, Vogt Power suggests the following repair procedure.

4.3.1 Identify the location of the leak. Hydrostatic pressure from feedwater pumps may be necessary to visually identify location of leak. Install scaffolding in access lance if leak is located in upper portion of tube bank.

4.3.2 Vent the unit if hydrostatic pressure has been applied and drop the water level below the leak.

4.3.3 If access to the tube leak is obstructed by adjacent tubes, cut a path through the tube bank. The size of the pathway is to be determined by the welder making the repair.

4.3.4 Remove fins from the area directly around the leak on the leaking tube.

4.3.5 Ultrasonically test and dye penetrant test the area around the leak to determine the nature of tube failure.

4.3.6 Repair the tube leak.

4.3.7 Replace access path tubes in their original locations by removing approximately 3" (76mm) of fin at each weld joint and re-welding using the window weld procedure.

4.3.8 Dye-check each weld before blocking access with the next tube.

4.3.9 When all work is complete, hydrostatically test the unit.

NOTE: Above work is to be performed per ASME Boiler Pressure Vessel Code Sections I and IX.

4.4 Alternate Tube Leak Repair Procedure

If the window weld repair procedure is undesirable, suggests removing the leaking tube from service per the following procedure.

4.4.1 Identify the location of the leak. Hydrostatic pressure from feedwater pumps may be necessary to visually identify the location of the leak. Install scaffolding in access lane if leak is located in upper portion of tube bank.

4.4.2 Vent the unit if hydrostatic pressure has been applied. Completely drain the boiler or economizer based on the location of the leak.

4.4.3 Cut an oval section in from the top and bottom headers directly above the leaking tube (See Figure 4.2). Access to the top and bottom headers is provided through access doors in the attic and basement spaces.

4.4.4 Weld a steel plug in both ends of leaking tube (See Figure 4.3).

4.4.5 Re-weld oval sections previously removed from top and bottom headers.

4.4.6 When all work is complete, hydrostatically test the unit.

NOTE: Above work is to be performed per ASME Boiler Pressure Vessel Code Sections I and IX.

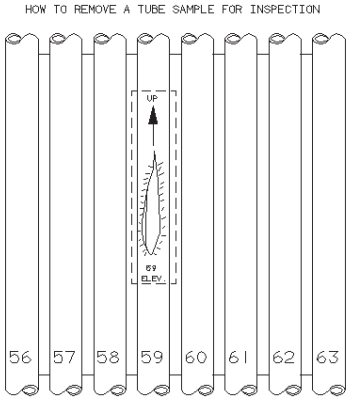

Figure 4.1 Typical Tube Removal Location Index

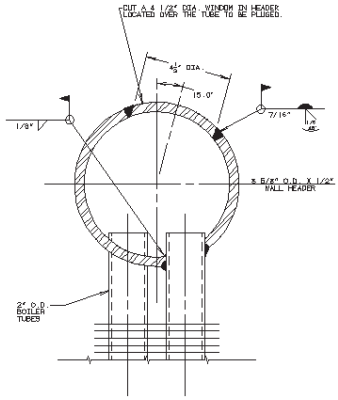

Figure 4.2 Typical Header Oval Removal

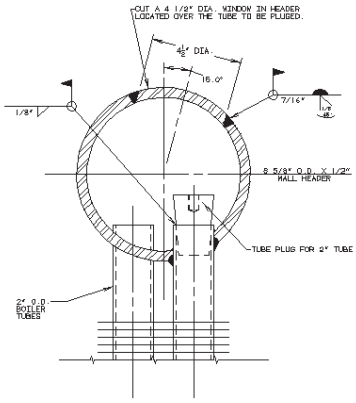

Figure 4.3 Typical Tube Plugging Process

5.0 TROUBLESHOOTING PROCEDURES

The ability to troubleshoot is not an inborn talent. It is a skill that can be acquired by anyone with a suitable background in boiler operations. One can become a good troubleshooter using:

- Sufficient knowledge of HRSG operations.
- Comprehension of the data contained in the HRSG Operation and Maintenance Manual.
- Sufficient knowledge of other types of power generation equipment
- Sufficient skill at interpreting instrument readings.
- Grasp of a logical approach to troubleshooting.

Logical troubleshooting does not recognize "Easter-egging," "cook-booking," or "trial-and-error" methods. The "Easter-egger" makes unsupported guesses as to the location of the problem. The "cook-booker" looks for clues in the troubleshooting chart of the technical manual. The "trial-and-error" method starts at one end of the equipment and works toward the other inspecting the installed pressure and temperature instruments. If any of the three methods locates the problem in a reasonable length of time, it is luck, not skill. Finding one bad or partially bad tube or weld among hundreds or thousands is not very easy to do by illogical methods.

Logical troubleshooting is a time-proven procedure used by all accomplished operators in any industry. Most of them have applied the procedure so often that they no longer pay attention to its fine points.

Probably no two operators would explain the procedure in the same manner, but all would agree that logical troubleshooting consists of a series of sequential steps based on observation and available fact that systemically narrow the problem down to the faulty part. Some would list the procedures in three or four steps. Others would count a dozen or more. Regardless, the principles would be the same.

This procedure applies six steps as a reasonable process. The steps in their sequential order are:

Step 1 - Symptom Recognition
Step 2 - Symptom Elaboration
Step 3 - List Probable Faulty Functions

Step 4 - Localize the Faulty Function
Step 5 - Localize the Faulty Heat Transfer Section
Step 6 - Failure Analysis

5.1 STEP 1 - SYMPTOM RECOGNITION

The first step in any troubleshooting process is recognizing the indication of a problem. Recognizing a problem in an HRSG is not always easy to do since conditions of less than peak performance are not always apparent. Lack of steam generation, low steam temperature, and low steam pressure are just a few of hundreds of examples.

There are many ways that the existence of a problem can be revealed. Obvious problems will undoubtedly be reported by the operators. These usually include complete or almost complete malfunction of the equipment. Problems not easily noticed are those that cause degradation in equipment performance.

5.2 STEP 2 - SYMPTOM ELABORATION

Breaking out tools, equipment specifications, drawings and proceeding headlong into troubleshooting on merely the original identity of a symptom is often proves to be an unnecessary expenditure of energy. By themselves, low steam flow, low steam temperature, low steam pressure, or excessive blowdown are symptoms of a problem. However, none of these symptoms alone can define the problem. It is counter-productive to attempt a solution before the problem is completely defined.

The procedures involved are dependent upon the available aids designed in the equipment and the nature of the original symptom. The aids include control system readings and built-in performance measuring indicators. Additional information can be obtained about any malfunction as the result of a systematic control system check. With a fair knowledge of how an HRSG works, manipulation of appropriate controls and switches and corresponding checks on equipment gauges and thermometers will reveal how the problem is affecting the entire HRSG. From these clues, it is possible to narrow down probable areas of the steam generator circuit that could contain the problem.

5.3 STEP 3 - LIST PROBABLE FAULTY FUNCTIONS

The third step requires that the troubleshooter take an "educated guess" as to the probable cause of the problem. From the elements of the symptom that have been identified, determine the most logical source. Locations should be confined to major subdivisions of the equipment, the major functional units. "Educated guesses" are logical conclusions made from knowledge of how the equipment works.

As an example, assume that the malfunctioning HRSG has low high pressure steam flow.

The "educated guess" could include any of the following: (1) HP economizer, (2) HP evaporator, (3) HP superheater, and (4) control system. Making an "educated guess" that the problem is a bad tube because past equipment problems were caused by bad tubes is not helpful. The purpose here is to use valid reasoning to isolate the probable functional area which may contain the problem. It may well be that the specific problem is a bad tube, but wholesale tube substitution takes a lot of time and quite often introduces additional problems.

Even an accomplished operator may not be able to list all of the functional units that are probable sources of a problem. But, with the exception of very obvious problems, any multi-unit piece of equipment will have two or more functional units that are likely sources of a given problem.

5.4 STEP 4 - LOCALIZE THE FAULTY FUNCTION

In this step, one of the "educated guesses" must be selected for testing. It is not necessarily the one that was thought of first. Selection of the functional unit to be tested (or verified) first should be based not only on priority of validity but also on difficulty in making necessary tests. Under some circumstances, a troubleshooter might elect to test the second most likely "educated guess", because the latter might involve difficulties that make testing very inconvenient (such as shutting down the unit) or require physical modification to modules that might later prove to have been unnecessary (such as cutting inspection holes in headers). Like all others, this step in troubleshooting procedure places emphasis on common sense thinking rather than the resultant action.

After selecting the order in which to check the HRSG functions listed, verify the first selection. Checks will normally be made at the output test point of the suspected unit. For instance, the operator could check the output at the test points provided for each unit listed as a probable faulty function.

If the operator does his "mental" work properly, manual work in gaining access to pressure gauges and equipment inspections can be limited to a bare minimum. This procedure differs from trial-and-error methods where the operator searches from point to point, hoping to locate the problem by luck. This waste valuable time and shows an unwillingness to rely technical knowledge that indicates that only luck will find the problem.

Upon completing a verification of the probable faulty unit selected, an operator will arrive at one of several conclusions. The test may verify that (1) this is the unit in which the problem lies, or (2) the problem could be in this unit plus one or more units from which it receives water or steam, or (3) the problem is not in this unit, or (4) the output looks suspicious and further verifying tests need to be made.

Whatever the conclusion, additional information is now available that can be used to substantiate or eliminate suspected units on the list or provide evidence for adding another. Tests of suspected unit outputs are continued until the faulty unit(s) is identified. The problem has been isolated to a fraction of the total number of circuits and parts in the equipment. At this point, the search can be confined to the functional area isolated.

Note: There are some types of equipment, such as instruments, that cannot be easily divided into functional units. In troubleshooting of this type of equipment, Steps 3 and 4 can be eliminated from the troubleshooting procedure.

5.5 STEP 5 - LOCALIZE THE FAULTY HEAT TRANSFER SECTION

After the faulty unit has been isolated, the next step is to identify the faulty modules. The procedures are used as before, now on a smaller scale. The unit is subdivided into circuit groups by function, and valid technical reasoning is employed to select those that might probably contain the problem. Using this procedure, the operator can find the problem without going through the unnecessary, time-wasting chore of test-point checking from one end of the unit to the other.

Work from the setting drawings or block diagram of the HRSG. Apply the information obtained from the preceding steps regarding the nature of the problem.

In narrowing down the problem to a single functional group of modules, employ a process called bracketing. In this process, brackets are placed, mentally or in pencil, around the module group in which the problem lies. Initially, a bracket is placed at each input known to be good and at each output known to be bad. As each deduction is made and verified by a test, the input or output bracket is moved to the point in the setting drawings where the test was made. In this manner, the closing brackets systematically narrow the fault to a single heat transfer section. In selecting a point on the servicing block diagram to which one of the brackets is to be moved, consider two things: the faulty characteristics of the improper module and the types of steam or water paths contained in the unit.

There are no hard-and-fast, step-by-step procedures in bracketing, but there are some realistic general rules. Examine the characteristics of the faulty module output to determine the module function that either generates or controls the improper characteristics. If the test does not reveal sufficient information for a valid bracket move, make another "educated guess."

5.6 STEP 6 - FAILURE ANALYSIS

The troubleshooting procedure thus far has narrowed the problem down to a single module consisting of tubes, headers, and a few parts. If there is no output from the circuit, it may be wise to resort to hydrostatic testing. However, such checks can be minimized if there is an external indication such as distorted HRSG casing or insulation, or unexplained water release.

When the faulty part has been identified, it should not be replaced until the maintenance personnel can substantiate that it is causing the actual problem. The suspected tube or valve may not be the reason, or the only reason, for the fault output of the HRSG boiler circuit. If the operator replaces the part without an adequate technical reason, he may not have cured the problem. Analyze the failure before making the repair.

5.7 SUMMARY

The six-step troubleshooting procedure is designed to isolate a problem in a logical manner. Success in using the procedure is dependent upon knowledge of the equipment and skill in using the technical manual and test equipment.

6.0 MAINTENANCE CHECKLISTS

Outage maintenance preparation requires proper securing of HRSG gas side casing and steam generator pressure parts so that no danger exists for personnel. The HRSG can be cleaned of loose debris or ash deposits from oil firing or SCR operation in a progressive sequence from the combustion turbine to outlet stack.

Deposits should be removed prior to any extended outage as they may contain an appreciable amount of sulfur or sulfur compounds. The deposits can absorb moisture contained in the atmosphere and form sulfuric acid which will corrode various pressure parts. Water washing is not recommended, unless absolutely necessary, and if it is to be done it should be done thoroughly. High pressure air or water lances may be used to remove ash deposits from extended heat transfer surfaces attached to the tubes. Soda ash may be added to the wash water to raise the pH to approximately 11.5 to 12.0. If sulfur compounds should remain on the extended surface tubes after a water wash, the sulfur will form sulfuric acid and corrosion may result. A partial water wash is worse than no water wash at all.

When the unit is in service, data including all HRSG gas side temperatures, water side temperatures, pressures, and flows, and gas side pressure drops should indicate problem areas of potential deposit accumulation.

The following paragraphs provide a simplified checklist for outage planning. The checklist serves as a basis for developing a detailed outage inspection plan.

6.1 DAILY WALKDOWN CHECKLIST

Visual check points during base load and / or normal operation. **Checked**

6.1.1 Ductwork external casing / expansion joints
- Check casing temperature, note any hot spots / paint discoloration _____
- Check for unusual noise inside duct _____
- Check metal bellows expansion joints for any damage, cracks, leaks, or discoloration _____
- Check expansion joint fabric and insulation for any damage / leaks _____

6.1.2 HRSG at Grade Level
- Check for steam / water leaks at valve packing, handholes, manways and piping flanges _____
- Check under unit / bottom casing and around the skids to make sure area is dry _____

- Check for noise / vibration conditions at pump and/or fan skids _____
- Check access doors for leaks / hot spots _____
- Check casing drains for leaks / hot spots _____

6.1.3 HRSG at Steam Drum Elevation
- Check for steam / water leaks at valve packing, manways and piping flanges _____
- Check gage glass for leaks, visibility and cleanliness _____
- Check gage glass illuminator light bulbs for operation _____
- Check safety valves for any steam leaks _____

6.1.4 General
- Inspect temperature gages and pressure gages for correct operation, check pressure gages for leaks. _____
- Check the burner flame using the viewports. Look for flames impinging on the tubes or liners, or uneven flames. _____

6.2 Drums, Headers, and Tubes - Water Side

Checked

- Steam drum(s) for corrosion, scale, pitting, or other metal reduction _____
- Clean manhole seats, resurface if necessary, and replace gaskets _____
- Inspect steam separation equipment in steam drum(s) for corrosion, deposits, security, and tightness of joints _____
- Check condition of all chemical feed and blowdown lines inside pressure parts for plugging, security, leaks, and orientation _____
- Check freedom of expansion of drums and headers, note any damage to liners, etc. _____
- Inspect tubes for corrosion, deposits, and pitting _____
- Replace all handhole gaskets on headers, inspect manhole plates and stud threads _____
- Make a complete water side examination and check for scale build up as necessary _____

6.3 Drums, Headers, and Tubes - Gas Side

Checked

- Inspect exterior of drums for signs of leaks, cracks, corrosion or overheating _____
- Check condition of exterior insulation; replace or repair as necessary _____
- Inspect drum supports for condition and check expansion clearance _____
- Inspect all blowdown connections for expansion and flexibility of support; inspect all piping and valves for leaks _____
- Visually check water wall tubes and fins (if applicable) for cracks _____
- Inspect exterior of all tubes for corrosion, build up, erosion, blisters, bowing, etc. _____
- Inspect headers for signs of steam generator water leakage _____
- Examine exterior of headers for corrosion, erosion, and condition of insulation _____
- Examine module hangers for damage or overheating _____

6.4 Superheater Modules

Checked

- Inspect superheater header and tubes for corrosion, erosion, overheating, misalignment, etc. _____
- Inspect superheater header and tubes for complete freedom of expansion _____
- Verify cleanliness and security of vent and drain connections and valves _____
- Examine superheater header and tube supports for security _____

6.5 Economizer Modules

Checked

- Inspect interior of tubes, return bends, and headers (where possible) for corrosion, oxygen pitting, and scale _____
- Inspect exterior of tubes and headers for corrosion, erosion, and deposits on top of lower headers, clean if needed _____
- Verify cleanliness and security of vent and drain connections and valves _____
- Inspect exterior of economizer casing for leaks and tightness of access doors _____
- Verify condition of casing insulation (inside and outside) _____
- Examine superheater header and tube supports for security _____

6.6 Casing, Insulation and Personnel Protection

Checked

- Test studs and washers for welds, expansion allowances, and tightness _____
- Inspect condition of insulation under liner where visible _____
- Inspect burner tile / liners for deterioration and signs of flame impingement _____
- Inspect exterior of casing and support steelwork for bent, broken, or bowed members; repair as necessary _____
- Inspect all access doors, observation doors, etc., for tightness; renew gaskets and/or glass as required _____
- Check condition of all baffle(s) and with particular attention to signs of leakage and security of supports _____

6.7 Water Columns

Checked

- Check gauge glasses for leaks, cleanliness, and visibility _____
- Check illuminators, reflectors, and mirrors for cleanliness and breakage _____
- Check operation and condition of gauge cocks and valves; inspect chains and pulleys if used; repair or replace as necessary _____
- Verify that water column is free to expand with boiler _____
- Inspect water column connections to drums for leaks, internal deposits, and missing insulation _____
- Verify operation of high, high-high, low, and low-low water alarms _____

6.8 Drum Water Level Control Valve

Checked

- Examine valve for leaks, operability, and cleanliness (do not dismantle if operation has been satisfactory) _____
- Check connecting lines and mechanisms for functionality _____

6.2.9 Valves

Checked

- Check condition and operation of all feedwater, blowdown, drain, and other miscellaneous valves; replace parts as necessary and repack _____

6.10 Safety Valves

The first four items should be performed only if the valve failed to perform properly during testing. All testing and repairs must be conducted by a qualified craftsman from the manufacturer, his certified representative, or an assembler.

	Checked
- Check condition of valve nozzle and disk seats; lap seats	_____
- Check condition of valve internal parts for corrosion, galling, and wear; recondition or replace	_____
- Check valve springs for cracking, pitting, resiliency, and end coil squareness	_____
- Check spindle for straightness and adjust ring threads for freedom of movement	_____
- Test operation of valves by steam pressure (on the boiler if necessary), and adjust to open and close at proper pressures; record set pressure and blowdown	_____
- Check discharge and drain piping for security, and allowance for boiler expansion	_____

6.11 Pumps and Fans

	Checked
- Check bearings for wear or shaft scoring	_____
- Check operation of bearing thermocouples for bearing temperature	_____
- Check cooling water inlet lines and drains for cracks, supports, and corrosion	_____
- Inspect pump drain box	_____
- Inspect shaft seals or glands	_____

6.12 Catalyst Banks / Ammonia Injection Grid

	Checked
- Inspect ammonia injection piping for deformation, verify supports	_____
- Inspect ammoinia injection ports for deposits or plugging. Clean as necessary.	_____
- Inspect catalyst bank structure for loose bolts or damaged steel. Replace / repair as necessary	_____
- Inspect catalyst for plugging / fouling	_____

6.13 SPIRAL WOUND GASKET BOLTING-UP PROCEDURES

Metallic Spiral Wound gaskets are typically used for high pressure drum manways, feeder header handholes, and pipeline flanges that must successfully pass a hydrostatic test and maintain a satisfactory seal under operating conditions. Flexible graphite or composite gaskets are commonly used on LP drum manway. Section I, Tab 1 of this manual provides the reference for the steam drum manway gasket specifications and installation instructions.

On high temperature applications, considerable relaxation of bolt stress can occur due to creep of the bolt material if the bolts are not properly torqued at installation. The level of relaxation depends upon the bolt material and temperature to which the bolt is subjected. In applications where a bolt is operating near the upper extremity of its recommended temperature range, it is highly feasible that the relaxation will be so great that leakage will occur after a period of time on a flange that has successfully passed the hydrostatic test. It is therefore essential to pre-stress a bolt to a degree that will guarantee maintenance of a stress level at operating conditions that will ensure a leak- tight joint.

In order to create an effective seal, any gasketed joint requires application of an even compressive force. From a practical standpoint, in order to achieve this, a very specific bolt-up procedure must be followed. Section I, Tab 1 of this manual provides the reference for the steam drum manway gasket specifications and installation instructions. Critical points for long term integrity of the gasket include:

- Inspect gasket surfaces. They must be clean and free of imperfections. Any foreign material should be carefully removed. Do not score the seating surface when cleaning.
- Bolts should be free of dirt and grit and well lubricated.
- Torque the bolts as described in the bolting procedure. Gasket must be evenly compressed to avoid damage to the gasket which cannot be corrected by subsequent tightening.
- In view of the inaccuracies associated with conventional bolt tightening tools, including torque wrenches, it may be pertinent to consider a more accurate method of pre-stressing bolts on flanges which continually suffer from leakage problems or where it is critical from a safety 6.13.3

visible all around the perimeter it is the wrong size. Either will quickly lead to failure.

A spiral-wound gasket will provide a reliable seal if properly installed in the application for which is designed. Please remember that the performance of spiral-wound gaskets is not solely dependent on the gasket itself but on a combination of variables, many of which are outside the control of the supplier. If joint leakage or a failure occurs, it is most often due to something other than failure of the gasket. If leakage does occur, the following items should be checked:

1. Is the correct new gasket being used?
2. Are flanges clean and true, and free of surface damage?
3. Do flanges have the correct surface finish?
4. Are nuts and bolts of the correct material and well lubricated?
5. Has a proper bolt-up procedure been followed and sufficient preload applied?
6. Is the gasket properly centered on the manway door? Is the gasket covered by the door?

If you have any problems, contact our technical service department - they are here to assist you! Please have the following information available when calling:

a. Operating pressure and temperature
b. Manway dimensions and shape (ie, 14" X 18" oval)
c. Manway ring ID
d. Manway cover OD
Manway bolting circle information (no. of bolts, diameter of bolts, bolt circle dimensions)

7.0 PRESSURE PART LIFE

The successful operation, maintenance, and HRSG Pressure Part Life depends on the proper start up, loading, and load changing procedures. These procedures gain in importance as units undergo frequent starting and loading cycles.

In many instances, HRSG pressure parts appear to start without difficulty in spite of improper methods. During the initial period of service, no problems will be evident. Close inspection of the pressure parts may later reveal unnecessary damage. The damage may include tube metal exfoliation, racking, swelling, or cracking of HRSG pressure parts. These conditions can be avoided by proper supervision of the HRSG by the operators.

Pressure part life is "used up" or expended by a combination of thermal stress, pressure stress, and high temperature creep. Thermal fatigue is the repeated thermal stress and strains produced by uneven heating or cooling when a pressure part shell is restrained and cannot expand or contract uniformly. Pressure stress and strains occur as the pressure part operating pressure is increased or decreased during operation. The thermal and pressure stresses produce fatigue cycle effects on pressure parts. These cycles are generated by the transient operation of the combined cycle plant such as start ups, shut downs, or load shifts. Creep is the change in physical properties in pressure parts that operate at elevated temperatures for prolonged periods of time.

During steady-state operation, the combined thermal and pressure stresses in pressure part shells are maintained at a relatively low level. However, during transient operation such as start ups, shutdowns, load changes, and emergencies, large thermal stress can be superimposed on the pressure stresses in the pressure part shells. A severe transient may produce yielding, resulting in the expenditure of a certain percentage of the pressure part fatigue life. The amount of life expenditure depends on the level of combined stress developed during each operation.

The expression of life expenditure due to fatigue and creep effects is referred to as cumulative damage, creep-fatigue damage, or pressure part life expenditure. The calculation of life expenditure is achieved by the life fraction rule outlined in ASME Section III Code Case N-47 for elevated temperature applications.

7.1 CREEP

The life of high temperature pressure parts such as superheaters and reheaters are affected by CREEP deformation. Creep deformation occurs in pressure parts exposed to high temperature for prolonged periods of time. Creep amplifies the damage caused by thermal and pressure stresses. Creep damage is typically modeled in three stages.

Stage I — The initial pressure part deformation is marked by small creep strains by a decreasing deformation rate during the initial service period.

Stage II — The continuing creep deformation is differentiated from Stage I deformation by an extremely small variation in deformation rate providing an essentially constant creep rate.

Stage III — In this final stage of creep deformation, creep is distinguished by an accelerating deformation rate leading to rupture. The creep-rupture phenomenon is modified by previously identified operating transients and leads to an accelerated failure mechanism referred to as creep failure.

7.2 THERMAL STRESS

Thermal Stress does not generally have an immediate effect on HRSG pressure part life. For example, if the HRSG is started one time at 500°F/hr (260°C/hr) steam/water mixture temperature ramp, a pressure part shell crack will not develop immediately. *It is the repeated cycling of such high stress that causes cracking.* Thermal stress is most intense at the shell surface, since it is caused by the difference between the inner or outer shell surface temperature and average metal shell temperature.

In order to explain the sources of the thermal stresses, which can produce pressure part cracking, four typical transients are considered. These are as follows:

1. Cold Start
2. Hot Start
3. Daily Load Change Cycle
4. Shutdown

Before considering these specific transients occurring in thick shell pressure parts, it is necessary to recognize that initial pressure part shell temperature, pressure, and final pressure part shell temperature are dependent on load. The HRSG High Pressure drum shell stresses will be investigated as a typical HRSG pressure part in the following paragraphs

For a cold start, the drum shell temperature changes with time, for a given rate of CT load increase. Prior to cold start, both the inner and outer pressure part shell surface temperatures are initially near ambient temperature. As the CT is started and loaded, heat is absorbed by the heat transfer surface or pressure parts increasing the temperature of the steam/water within the pressure parts.

The HRSG heat transfer modules absorb this heat with the extended surface or fins and transfer the heat to the outside surface of the tubes. The result of this absorption is to increase the outside tube wall temperature. The increase in outside tube wall temperature above the inside tube wall temperature creates a temperature differential. The temperature differential transmits the heat from the outside wall to inner wall by conduction through the tube shell increasing the inside tube wall temperature. Conduction transient heat transfer occurs in proportion to the wall thickness of the pressure part. In the case of a thin walled pressure part such as an evaporator module tube, this process occurs very rapidly resulting in a minimal inside to outside tube wall temperature differential.

The heat energy is then transferred to the fluid inside the tube causing the water temperature to rise and produce a steam/water mixture. The increased steam/water mixture temperature in an evaporator tube results in a fluid density change as outlined in Section 1, Tab 2. The evaporator tube is a component of a Natural Circulation Loop which contains a steam drum. In the drum the heated fluid contacts the drum shell inner surface. The drum shell outer surface is at ambient temperature because it is not exposed to the hot steam/water mixture.

The drum shell inner surface temperature follows the HP Evaporator steam/water mixture temperature very closely, increasing fairly rapidly, to the full load temperature value. The drum shell outer temperature lags well behind, thus producing an appreciable temperature difference between the inner surface and outer surface of the drum shell. *It is the difference in inner and outer drum shell temperatures that produces thermal stresses.*

Compressive stresses occur in the inner drum shell surface because the increased drum shell surface temperature creates an expansion force in the inner drum shell surface. The expansion of the inner drum shell surface is restrained by the outer drum shell surface which is still cold. If the start up water/steam mixture temperature ramp and associated pressure are sufficiently severe, the inner drum shell surface material yields in compression, so that the residual tensile stress results when full load, steady state conditions are reached. This residual tensile stress will then release or "soak out" depending on operating temperature and time to next shutdown or load change. The high pressure outer drum shell surface goes into tension, and then decreases to zero

when steady state is reached, if yielding has not occurred. Repeated yielding or cycling of stresses will use up or expend pressure part cyclic life as cyclic fatigue damage.

The magnitude of thermal stress and strain produced in any section of the pressure part is proportional to the difference between the temperature at the location and the pressure part average temperature. The maximum thermal stress and strain occur at the pressure part surfaces. If the pressure part surface temperature rate of change is sufficiently rapid, the surface thermal stress will exceed the yield stress in compression, so that a residual tensile stress is produced in the drum shell outer surface. When the steam/water temperature is decreased, the reverse situation occurs. The inner drum shell surface stress becomes a tensile stress at this time. The residual tensile stress and strain during the constant temperature portion of the cycle constitute a "hold or soak time". If there is time enough at the soak temperature, the stress due to this cycle will partially relax, and another cycle will produce like effects, but they are cumulative toward causing cracks. Risk of cracking occurs when the thermal stress exceeds the yield stress of the drum shell material. Furthermore, the risk of cracking greatly increases due to prolonged operation at elevated temperature (higher than rated temperature). This happens because material yield stress values drop substantially with temperature. Several load changes will consume considerable amounts of pressure part life.

During a typical HOT START, the initial inner and outer drum shell surface temperature vary approximately as they would during a COLD START. The drum outer shell temperature is initially higher than the inner shell temperature because the heat transfer surface acts as a condenser without heat input. As the start up proceeds, the drum outer shell temperature first dips and then, as the inner shell temperature increases, the outer shell temperature levels off and then increases to full load inner shell temperature. The outer shell temperature lags behind the inside shell temperature during its increase, so that during the first portion of the cycle the inner shell surface is hotter than the outer shell surface, and during the latter portion of the cycle the temperature difference is zero. This reversal in temperature change between the inner and outer drum shell surface temperatures causes a reversal in thermal stresses, using up the pressure part cyclic life.

During a typical Daily Load Cycle, the steam/water mixture in contact with the inner drum shell surface goes through a complete cycle of first increasing, then holding at a constant value, and then finally decreasing to the initial level (this corresponds to a load increase), operation at a constant load for a period of time, and then a load decrease to the original load. The inner drum shell surface follows the steam/water mixture closely since it is in contact with the steam/water mixture, and the surface heat transfer coefficient is high. The drum shell center temperature lags considerably behind during

both heating and cooling. The drum shell average temperature is intermediate between the inner and outer shell surface temperatures.

Shutdowns can be equally important. Steep down ramps will similarly cause the pressure part surface to yield in tension and consume cyclic life. Whenever the yield strength is exceeded during start ups, load changes, and shutdowns, material cyclic life is expended or used up, towards initiating a crack. Once such a crack is initiated, excessively steep ramps are likely to swiftly drive the crack deeper.

The magnitude of the thermal stress and strains is dependent on:

1. The extent and rate of temperature change.
2. The surface heat transfer coefficient.
3. The massiveness (diameter and thickness) of the pressure part.
4. Thermal properties of the material.
5. Thermal stress concentration factors in highly stressed regions.

In general, large diameter and thick shell pressure parts such as High Pressure Drums or Superheater/Reheater headers, fast rates of temperature change, and large amounts of change, will all cause large thermal stress and large expenditures of cyclic life.

<u>It should be emphasized that at any time before a crack is initiated there may not be any external symptoms of operating difficulty, or visible evidence of a crack.</u> The operators might assume that no damage has been done. The strain damage has been done, however, and is adding up so that it will finally produce a small or microscopic crack. Small, microscopic cracks can be drawn into deep or macroscopic (visible) cracks during severe ramps, because the shell surface is stretched in tension, pulling open the cracks.

<u>IMPORTANT</u>: IT IS IMPERATIVE THAT THE OPERATORS FOLLOW THE RECOMMENDED STARTING AND LOADING INSTRUCTIONS TO MAXIMIZE PRESSURE PART LIFE AND TO OPTIMALLY EXTEND AVAILABILITY AND RELIABILITY. SEE SECTION I, TAB 5.

8.0 WARRANTY, INSPECTION AND MAINTENANCE REPORTS AND FORMS

See the following pages for Warranty, Inspection and Maintenance Reports and Forms.

Equipment Failure Report

Report No:

Equipment Descriptions:

Serial No.: _____

Type

Description of Failure

Associated Maintenance Report

Failure Category

Inspection & Maintenance Record
Ducting

Record _____

Boiler Inspection: _____ Vogt Power Reference no: _____ Inspection Interval: _____

Plant no: _____ Maintenance Interval: _____

Boiler Location: _____ Year of Construction: _____

Date	Inspection	Maintenance	Inspection Location	Name Employee	Signature	Accept (Y/N)	Remarks

Inspection & Maintenance Record
Equipment

Record _____

Boiler Inspection: _____ Vogt Power Reference no: _____ Inspection Interval: _____

Plant no: _____ Maintenance Interval: _____

Boiler Location: _____ Year of Construction: _____

Date	Inspection	Maintenance	Equipment Reference No.	Name Employee	Signature	Accept (Y/N)	Remarks

Inspection & Maintenance Record
Expansion Joints

Record_____

Boiler Inspection: _____ Vogt Power Reference no: _____ Inspection Interval: _____

Plant no: _____ Maintenance Interval: _____

Boiler Location: _____ Year of Construction: _____

Number	Date	Inspection	Maintenance	Name Employee	Signature	Accept (Y/N)	Remarks
0							
0							
0							
0							
0							
0							
0							
0							
08							
0							
0							

Inspection & Maintenance Record
External Insulation

Record _____

Boiler Inspection: _____ Vogt Power Reference no: _____ Inspection Interval: _____

Plant no: _____ Maintenance Interval: _____

Boiler Location: _____ Year of Construction: _____

Date	Inspection	Maintenance	Name Employee	Signature	Accept (Y/N)	Remarks

Inspection & Maintenance Record
Internal Insulation

Record_____

Boiler Inspection: _____ Vogt Power Reference no: _____ Inspection Interval: _____

Plant no: _____ Maintenance Interval: _____

Boiler Location: _____ Year of Construction: _____

Date	Inspection	Maintenance	Name Employee	Signature	Accept (Y/N)	Remarks

Inspection & Maintenance Record
Pressure Parts

Record_____

Boiler Inspection: _____ Vogt Power Reference no: _____ Inspection Interval: _____

Plant no: _____ Maintenance Interval: _____

Boiler Location: _____ Year of Construction: _____

Date	Inspection	Maintenance	Inspection Location	Name Employee	Signature	Accept (Y/N)	Remarks

Maintenance Report

Report No.:

Description of Failure

Procedures Followed

Results

Spare Used

Equipment Failed

Further Comments

Preventive Maintenance Record

Record

Boiler Inspection: _____ Vogt Power Reference no: _____ Inspection Interval: _____

Plant no: _____ Maintenance Interval: _____

Boiler Location: _____ Year of Construction: _____

Date	Inspection	Maintenance	KKS-no.	Name Employee	Signature	Accept (Y/N)	Remarks

Warranty Claim Instructions: It is the policy of Vogt Power to resolve your warranty issue as fast as possible. In order to quickly communicate your warranty claim, please provide the following information and a description of the problem.

DATE: _____ VOGT POWER PROJECT NO.: _____ WARRANTY CLAIM NO.: _____

CUSTOMER/OWNER CONTACT: _____

COMPANY: _____ UNIT NO.: _____

ADDRESS: _____

PHONE NO.: _____ FAX NO.: _____

EMAIL: _____

CLAIM DESCRIPTION (Include System, Component, Tag Numbers and Drawings):

_____

RETURN TO: Vogt Power International Warranty Services
ADDRESS: 13551 Triton Park Blvd, Suite 2000, Louisville, KY 40223
ATTN: Mark Fisher, Warranty Manager
EMAIL: mfisher@vogtpower.com
PHONE: (502) 899-4503
FACSIMILE: (502) 891-1960

1.0 PRELIMINARY FILLING AND FLUSHING

The following procedures apply to the high pressure evaporator and economizer; the intermediate pressure evaporator and economizer; the low pressure evaporator; and the feedwater heater or low pressure evaporator.

1.1 Fill all boiler systems with cold water (above 70°F / 21°C) through the feedwater bypass lines for flushing. If cold water is not available, use boiler feedwater with extra care so as not to thermally shock the unit with hot water. USE CAUTION SO THAT NO ONE IS BURNED. The maximum temperature differential should be 50°F (28°C) between the water and the metal of the drum or economizer. Keep in mind that the water enters each module through the internal piping and the cold metal will not be exposed to the fresh hot water.

1.2 If a minimum of 100 psig / 6.9 bar (75 psig / 5.2 bar for the low pressure system) is available, flush the economizers by opening the drain valves until the water runs clear. Flushing is best done before drain lines are "hard piped" to a flash tank or drain pump. Repeat as often as required to clear headers and valves of construction dirt. Do not try to flush unless 100 psig (75 psig for the low pressure system) is available for the drain valves or debris may be trapped under the valve seat, causing the valve to leak.

1.3 During filling, vent the economizer(s) by opening the vent valves until all the trapped air or flashing steam is vented from the upper headers.

1.4 Flush the evaporators until the water runs clear from the bottom blowoff valves. Try to use an open drain that allows the boiler operator to check the water clarity as well as the valves for tight shutoff. Often a "free drain" is added to the blowdown piping for this purpose.

1.5 Continue to fill the boiler until water flows from the boiler drum vent. Close the drum vent when no additional air flows from this line.

When cold water is used, the complete "pressure unit" must be full before pressure builds on the system. Remember that with 80 ft. (24m) head, the pressure is about 35 psig (2.4 bar) at the lower drains without steam or air pressure.

1.6 Purge the air from the feedwater heater through the vent connections.

1.7 Flush the gauge glass and water columns valves until each runs clear and is free of air.

1.8 Flush out the boiler pressure gauge lines.

1.9 Flush out all instrument lines with the aid of the instrument engineer or technician.

1.10 Drop the level to normal and either chemically clean the unit or proceed with Operation.

2.0 HYDROSTATIC TEST

2.1. INTRODUCTION

2.1.1. This procedure provides guidance for conducting hydrostatic field tests of a Heat Recovery Steam Generator (HRSG).

2.1.2. An HRSG is composed of several pressure levels or sections of heating surfaces. These sections are designed, fabricated, and erected in accordance with ASME Code requirements found in Section I, VII, IX and/or B31.1, as applicable. Refer to P&ID drawings to determine the hydrostatic test boundaries.

2.1.3. Based on Code requirements, a field hydrostatic test is to be performed. During the test, the HRSG shall be inspected for leaks / failures by the erector's inspector and/or the VPI commissioning agent. The Owner may also provide a representative if so desired. Due to the design of HRSG's, multiple tests will be required. The appropriate sections of the HRSG shall be inspected at the time of each test. Refer to Section I Tab 3 for Design and Hydrostatic pressures.

2.2. PRETEST ACTIVITIES

2.2.1. The testing personnel shall develop a site plan which details how the test will be conducted. If there are any questions, Vogt Power International, applicable codes, and/or the AI shall be consulted.

2.2.2. Leaks at high pressure can cause serious injuries. The HRSG area should have temporary boundaries set-up to prevent access into test area. Adequate attention shall be given to provision of safety barriers, postings, notices, tags, flags, etc. for warning personnel during high pressure testing. Pressurized systems shall not be left unattended.

2.2.3. Manways and Handholes

2.2.3.1. All manways and handholes shall be opened and checked for cleanliness. Prior to closing for filling, these items shall be checked.

2.2.3.1.1. All loose material shall be removed.

2.2.3.1.2. All seating surfaces shall be inspected and repaired if required.

2.2.3.1.3. All gaskets shall be inspected and replaced as necessary.

2.2.3.1.4. When closing, inspect for proper clearances and alignment.

2.2.4. Pipe Supports

2.2.4.1. Variable and constant pipe supports shall have a hydro test pin installed per the manufacturer's instructions to prevent pipe movement during the hydrostatic test.

2.2.5. Instruments

2.2.5.1. Instrument sensing lines should be isolated (valved off), or disconnected when possible, to prevent foreign material from entering the instrument tubing.

2.2.5.2. All flow elements shall be removed.

2.2.6. Flanges

2.2.6.1. All flange connections shall be checked for proper bolting and gaskets.

2.2.7. Feedwater Pumps

2.2.7.1. Feedwater Pumps shall be isolated from the associated piping. Connections shall be blind flanged.

2.2.8. Valves

2.2.8.1. Safety valves with welded type bodies are supplied with a hydro test plug installed at the factory. Bolted style safety valves shall be blinded or pancaked to prevent lifting during over-pressurization. If the pancakes are used, the handles shall be painted a bright color for good visual verification that they are installed for hydrostatic testing and removed prior to operation. Do not use safety valve gages during hydrostatic testing as their use may result in damage to stems or seats.

2.2.8.2. Check all valve alignments against the test plan. All boundary valves shall be closed. All economizer, drum, and superheater vent valves shall be kept opened until all trapped air is removed.

2.2.8.3. All valves shall be tagged or marked for clear identification for operation during hydrostatic testing.

2.2.8.4. Attemperator valve shall be removed.

2.2.9. When possible, the test boundary should be extended to include the second vent and drain valves to minimize additional testing required by ASME/ANSI B31.1.

2.2.10. Each system physical configuration shall be reviewed to develop adequate fill/vent sequencing to assure all air is removed for hydro testing. System high points shall be vented sequentially. Sections left filled overnight, or for extended periods, shall be rechecked prior to testing

2.2.11. Walk down the entire system to verify that all equipment has been installed for the hydrostatic test. Failure to have all Code Equipment installed would/may require additional hydrostatic tests.

2.2.12. Hydrostatic test gauges shall be located at the top of the boiler when possible. When test configuration requires gauges to be located at the bottom of the HRSG, applied pressures shall take into account the effect of static head when determining the desired pressure. The gauge located at the pump operator station will also show higher pressure due to the static head.

2.2.13. The test apparatus shall have piping designed to the maximum hydrostatic pressure plus 6%.

2.3. An air leak test may be performed 30 psig minimum prior to the hydrostatic test if desired. Do not exceed 75 psig air pressure.

2.4. FILLING

2.4.1. Water for hydrotesting shall be potable with less than 50 mg/liter (about 50 ppm) chloride ion content or as agreed upon by Vogt Power International. Metal and water temperatures shall be allowed to stabilize prior to testing. In no case shall water and metal test temperature be less than 70 degrees F (21 C). Water temperature shall be within 50 degrees F (30 C) of the module header and drum metal temperature to avoid shocking the unit.

2.4.2. Fill system with cold water (above 70°F (21°C)). If cold water is not available, use boiler feedwater with extra care so as not to thermally shock the unit with hot water.

2.4.3. During filling, vent the economizer(s) by opening the vent valves until all the trapped air or flashing steam is vented from the upper headers of the low pressure and high pressure economizers.

2.4.4. Continue to fill the boiler until water flows from the highest vent. Close the vent when no additional air flows from this line.

2.4.5. As the heating sections and piping are being filled, all drain lines shall be bled to ensure that air is not trapped in these lines. The recommended minimum pressure for bleeding these lines is 25 psig (1.7 barg).

2.4.5.1. Sections which are filled and left over night shall be rechecked for air pockets prior to hydrostatic testing.

2.4.6. Some external piping is also equipped with vents. These vents shall also be bled similarly to the drain lines.

2.4.6.1. Piping which is filled and left over night shall be rechecked for air pockets prior to hydrostatic testing.

2.4.7. When cold water is used, the complete "pressure unit" must be full before pressure builds on the system. Remember that at 45 ft. (13.6 m) head, the pressure is about 33 psig (2.2 barg) at the lower drains without steam or air pressure.

2.4.8. After all HRSG Heating Surface sections and associated piping have been filled and all air has been purged/bled from the system, all code boundary valves shall be closed.

2.4.9. All handholes and manways shall be monitored during filling. If leaks occur and cannot be stopped by normal means, then filling shall be stopped and repairs made.

2.4.10. After all HRSG pressure parts have been filled and all air purged, a system walkdown shall be performed to verify the system boundaries and valve positions.

2.5. TEST PROCEDURE

2.5.1. The erector or testing personnel shall consult with the AI to determine minimum test parameters and have the agreement/concurrence prior to performing the test.

2.5.2. Testing shall be performed in accordance with ASME I PG-99 and ASME/ANSI B31.1, Chapter VI, Part 137, and witnessed by the Authorized Inspector. Pressure shall be applied gradually, and particular care shall be taken not to exceed the maximum pressures allowed. The rate of fill/pressurization shall be kept below the test apparatus relief capacity.

2.5.3. Drum manway bolts shall be monitored for re-tightening during the hydrostatic test to prevent leakage.

2.5.4. HRSG heating surface section under test shall not be left unattended.

2.5.5. The pressure shall be raised gradually to the hydrotest pressure of the section. The pressure may be increased by 100 psig per minute until the maximum allowable working pressure (MAWP) is reached and then by 25 psig per minute until the test pressure is reached.

2.5.6. The test pressure shall not be exceeded by more than 6%. In the event of exceeding this maximum, consult VPI Engineering for approval.

2.5.7. The hydrotest pressure shall be maintained for 30 minutes

2.5.8. The pressure may then be reduced by 25 psig per minute until the MAWP is reached.

2.6. INSPECTION

2.6.1. The test section shall be closely examined for leaks and/or deformation.

2.6.2. The test may conclude if no leaks, defects or pressure deviations are observed.

2.6.3. Any failures shall be recorded and tagged or repair. Repaired sections will require re-testing.

2.6.4. Upon successful test conclusion, a report will be prepared with the following information.

2.6.4.1. Job name and location
2.6.4.2. Job number
2.6.4.3. Test date
2.6.4.4. System tested
2.6.4.5. P&ID number
2.6.4.6. Applicable code
2.6.4.7. MAWP
2.6.4.8. Required test pressure
2.6.4.9. Actual test pressure
2.6.4.10. Ambient temperature
2.6.4.11. Test result
2.6.4.12. Reason for failure, if applicable
2.6.4.13. VPI (or erector) signoff and date
2.6.4.14. Owner signoff and date (as required)

2.7. SECURING FROM TEST

2.7.1. After completion of successful hydrostatic test, pressure shall be removed gradually from the system by opening vent valve(s). All temporary piping/hosing shall be removed.

2.7.2. After pressure reduction is completed, HRSG heating surface section shall be drained for lay-up, prepared for alkaline boil-out, or prepared for chemical cleaning.

2.7.3. HRSG sections can be gravity drained. To accelerate the draining process, oil free, hot air or nitrogen may be used. A centrifugal air compressor with the after-cooler bypassed may be used to supply the required air. If this type of compressor is unavailable, high pressure nitrogen source may be used.

3.0 ALKALINE BOILOUT

Alkaline boilout is used to remove oil, grease, and most protective coatings from tubes, headers, piping, and drum(s) prior to chemical cleaning or operation.

SUGGESTED PROCEDURE

3.1 Thoroughly mix the desired chemicals with the water while filling the unit through the economizer.

3.2 Slowly raise the temperature by any means available such as intermittently operating the gas turbine or steam heating of the chemical mix until the pressure is 25 to 50 psig (1.7 to 3.4 bar) in the boiler. To do this with steam, the stack must be tightly covered.

If steam is used, heat water externally and fill and drain until entire HRSG is equally heated. This is very time consuming because of the mass of steel that must be heated to approximately 240°F ±10°F (115.5°C ±6°C), plus the internal air space and casing, etc.

3.3 Maintain pressure for up to 48 hours. Set the continuous blowdown at 25% open. During this time, open the economizer drain valves in sequence with the blowdown valves.

3.3.1 Boil Out/Flush Out of Economizer

Install a circulating pump to remove water from the lower or bottom blowdown line and re-inject it into the economizer inlet to clean headers and tubes. This circulation should continue for three (3) or four (4) hours at maximum pressure and temperature per Section 3.2. The pump should have seals good for use with the cleaning solution at minimum conditions of 300°F (148.8°C) and 100 psig (6.9 bar). About three (3) to five (5) gallons (18.925 liters) per minute is a good size but a larger pump can be used (double this capacity for double width lines).

After circulation is complete, stop the pump, valve it off, and remove it from the system.

3.3.2 Open each economizer drain valve for approximately 10 seconds every 4 hours. Close valve firmly, but do not force it closed. Stop operation if valve is difficult to close. If so, reopen and blow again until valve is

flushed free of dirt and buckshot. While open, sharply (but carefully!) tap the valve body with a mallet to aid in loosening debris from valve body.

3.3.3 Open the regular bottom blowdown valves for 5 to 10 seconds maximum in four hour intervals. Add boiler feedwater as required to maintain drum levels to ±8" (203mm) of normal water level or within the visible range of the gauge glass.

When operating the bottom blowdown valves, open the upstream valve (valve closest to the boiler) first and close it last. This protects the inside valves seats from excessive wear.

About every four (4) hours, the drum level should be raised above the top of the gauge glass to clean the top of the steam drum. After a 10 minute soak, use the bottom blowdown valves to lower the level to within the sight glass.

3.3.4 Check the continuous blowdown (CBD) sample at least every two hours for total solids or alkalinity. Flush the CBD line by opening the control valve full and then re-setting it to 25 percent prior to taking the sample. Allow the sample to cool to 200 °F (93 °C) or below before analyzing. When total dissolved solids (TDS) drops to normal boiler water levels or below, boilout may be considered finished. See Section 1 Tab 8 for limits. Plot a curve of TDS versus time to aid in predicting completion.

3.3.5 The chemicals used should be as recommended by the water consultant. If commercial chemicals are not available, the following blend may be used to clean the unit:

Per Each 1000 lbs. or per each 1000 Kg of water:

3 lbs.	3 Kg.	Sodium Hydroxide (Caustic Soda) (Na OH)
3 lbs.	3 Kg.	Di-Sodium Phosphate (Na2 NP04) or Tri-Sodium Phosphate (Na3 PO4)
1 lb.	3 Kg.	Sodium Nitrate (Na NO3)
1 oz.	60 g.	Vel or equal detergent, or as a substitute for the detergents, use the following, but not both.

1 lb.	1 Kg.	Of a short chain anionic polymer that is stable to approximately 425 °F (218 °C)

3.4 PRECAUTIONS

3.4.1 Install temporary heavy duty glass in the drum level gauges (provided for initial commissioning) to protect regular glass from chemical damage.

3.4.2 Isolate any valves or instruments that the boil-out chemicals might damage (refer to vendor O&M manuals in Section IV).

3.4.3 Protective clothing should be worn while handling these chemicals. Eye protection is most important, but do not neglect rubber gloves, rain coat, and boots.

3.4.4 The chemicals should not be added to the boiler until boil-out is ready to begin. Drain and flush if chemicals have been added and the start of the "boil-out" is delayed over twenty-four (24) hours.

3.4.5 The superheater outlet must be vented to pass steam through all the modules for protection of superheater tubes. Drum vents should be closed at 15 psig (1 barg) or as soon as all air has been exhausted from the drums.

3.4.6 Drain and flush at least four times when the boil-out is completed. Leave the last dose of flush water in the unit and allow it to cool before making a complete inspection.

4.0 CHEMICAL CLEANING

The need for chemical cleaning a new or previously operated Vogt Power "HRSG" can only be determined by the system requirements. If it is desired to completely clear the entire system of magnetic oxides or remove calcium based scale, chemical cleaning is the best option. When an operating boiler has been fed unsatisfactory boiler feedwater, it may be necessary to chemically clean to remove scale deposits.

Vogt Power does not require chemical cleaning of newly installed equipment. If it is performed, it should be done by a reputable boiler cleaning contractor with knowledge of this particular type of boiler. Vogt Power will review cleaning procedures and offer comments upon request, but Vogt Power cannot take responsibility for the cleaning operation.

The following is offered as a guide only to aid in developing a safe and effective cleaning procedure.

4.1 PREPARATORY OPERATIONS

(If an alkaline boil-out has been performed, skip Section 4.1.1).

4.1.1 Clean all loose debris from the steam drum and cap any lines which lead to instruments that could be damaged by chemical cleaning. Place new gaskets on the manway covers.

4.1.2 Remove all floats, probes, and equipment that could be attacked by the cleaning solution, or, if impractical, cap them all from within the drum.

NOTE: Stainless steel components are subject to chloride attack. Hydrochloric acid solutions, even with inhibitors, should not be used.

4.1.4 Clean all debris from the lower circulating headers. Install new gaskets and close the lower header handholes.

4.1.5 Remove the regular gauge glasses and replace with plain, heavy duty disposable glasses for chemical cleaning. If there are no plain glasses available, replace the regular glasses complete with all gaskets and mica when cleaning is completed.

4.1.6 Blind off and bypass the feedwater control valve to avoid valve body or trim damage by cleaning solutions.

4.1.7 Attach the chemical cleaning lines to the chemical drain or regular drain valves as required by the consultant's procedure.

4.1.8 Fill the boiler with water and check the water side system for tightness. Close gas side access doors.

4.1.9 Before any chemical cleaning solution can work efficiently, the boiler(s), economizer(s), and superheater(s) must all be at an elevated temperature, usually about 180°F (82°C). If the system has just been through the alkaline boil-out procedure, the stacks and ducts can be sealed off to prevent cooling. The unit will then be ready for chemical cleaning as soon as all drains are routed into the chemical cleaning equipment.

4.1.10 If the boiler system has not been through the alkaline boilout as detailed in Tab 3 and 4.1.9, fill the boiler(s) through the economizer(s) with treated boiler feedwater and heat with the gas turbine exhaust. This heating should be continued until at least 15 to 25 psig (1 to 1.7 barg) steam is venting from the superheater vent valve(s). As the unit builds pressure flush out all economizer and superheater drain valves to remove buckshot and construction debris. The removal will not be as complete as with an alkaline boil-out because of the lack of detergency to break the surface tension of the construction debris. With extreme care, most of the loose material can be purged from the valves. The hot water drained from the boiler may be used by the chemical cleaning contractor to mix the chemicals. Use extreme caution while draining as some flashing will occur.

4.2 FILLING THE HRSG WITH CLEANING SOLUTION

WHILE ACID IS IN THE BOILER, NO WELDING MAY TAKE PLACE ON ANY BOILER COMPONENTS OR PIPING. Extreme corrosion has occurred when welding on metal containing acid. All construction around the unit must cease until all acid is removed and/or neutralized.

4.2.1 All chemicals must be mixed with both the inhibitor and water in tanks external to the boiler before pumping into the feedwater line. "In Line" mixing of acid and inhibitor will not be acceptable, unless diverted into a holding tank for complete blending before introduction into the boiler(s).

4.2.2 Introduce the initial cleaning solvent through the feedwater header. As the solution passes through the economizer modules each vent valve should be opened to vent air and gas as each "pass" is filling. Use care in venting to

protect equipment and personnel from chemicals (vent via hoses into holding tanks).

4.2.3 Continue to add solution until the cleaning solvent appears in the gauge glass. Continue as high in the drum as desired. Normally, there is nothing in the drum that a properly inhibited chemical solution will attack. Consequently the top vent line could be used for circulation through the drum. Use a hose to vent to a safe location such as a holding tank.

4.2.4 When the unit is filled to the desired level, the solvent should be left standing as long as required for 50% of the cleaning to take place.

4.2.5 During this time, fill the superheater modules with a suitable cleaning solution through the lower connections. Each superheater pass should be filled from the bottom upward to and through the vents.

4.3 CIRCULATING SOLVENT BY DRAIN and FILL METHOD

Due to the basic design of the module steam generator, it is impractical to clean the unit by use of a circulating pump. In order to clean all modules and drum(s) of the boiler and superheater, the system must be "filled and drained." Generally "clean by pumping" methods will clean only the economizer modules and the downcomer pipes. However, there are pumping and circulating options that can be effective if the downcomers are blocked properly to force flow through the evaporator sections.

If in doubt, have the contractor call Vogt Power and talk to the office of the Chief Engineer.

4.3.1 When sufficient time has elapsed to expect 50 percent of the cleaning to be finished, the cleaning solution should be dropped rapidly out of the unit into a holding tank, then tested for cleaning strength. Cleaning solution may be forced out by nitrogen pressure or may be pumped. Nitrogen (N_2) should be used to force the solution from the drains. Tests of solvents and dissolved deposit constituents should be according to ASTM Standard Method D-2790. For insoluble matter, ASTM Standard Method D-2332 should be followed.

4.3.2 Repeat the filling and draining operation in both the boiler section(s) and the superheater section(s) returning the solvent to full strength as required and adding external heat by a heat exchanger or by a direct steam sparger in the solvent circuit. For an HRSG superheater-boiler-economizer combination, there is no circulation possible during chemical cleaning except through the

economizer, down the main downcomer and out the drain chemical cleaning connection or blowdown.

It is necessary to circulate the cleaning solution by draining (to remove the solution) and by refilling (to recontact the surface). Filling through the economizer will automatically introduce chemical to this section with some velocity; however, filling and draining, even in the economizer section, is the only method to be 100 percent sure of changing the chemicals contacting the internal surfaces.

Note: It may be possible to force increased circulation through the evaporator section by blocking a percentage of the downcomer opening in the steam drum. This will force more flow into the rows of evaporator tubes.

4.4 NEUTRALIZING

After the cleaning is thought to be completed to the satisfaction of all concerned, drain and flush the unit with the neutralizing solution followed by water rinses. Continue to apply the "fill and drain" method of contacting all of the surfaces. After an inspection to insure that the cleaning is satisfactory by checking the lower header(s) and exposed drum portions, the unit should be passivated if storage is to be over 72 hours. The success of chemical cleaning is dependent upon the care with which the introduction of the solvent is made and the testing of the finished or spent solvent. There are two cleaning solutions that have been found excellent for rust removal.

4.4.1 The Citro-Solv method as used by Haliburton Services will clean the rust by solution in the citric acid (with either Rodine 31A or OSII at the rate of 1/2 gallon per 1000 gallons as the inhibitor). Ammonia is used to neutralize the citric acid. This reduces the disposal problem as only one solution remains.

4.4.2 More expensive but excellent for rust removal is a carefully controlled chelant soaking. This too, must be filled and drained but it has proven to do an excellent job.

4.4.3 Remove the stack cover when cleaning is completed, to aid in cooling.

4.5 INTERNAL INSPECTION

If desired, the upper and lower module headers can be examined through the risers or feeders with a boroscope to determine the effectiveness of the cleaning.

5.0 STEAM BLOW CLEANING

The purpose of steam blow cleaning is to remove weld-bead deposits, pipe slag, iron oxides, and other foreign material from power piping and the Heat Recover Steam Generator (HRSG) superheater surfaces to minimize the possibility of process equipment or steam turbine damage. Particles carried by steam into process equipment or steam turbines will affect and damage the steam path through wear.

Techniques for cleaning steam piping for a variety of process equipment and steam turbines furnished with combined cycle plants are covered. The Purchaser should apply only those guidelines and procedures which are applicable to the specific equipment. This development of the plants steam blow procedure should be governed by the following three issues.

5.1 OBJECT

Each facility performs the necessary number of steam blows until a source of clean steam (that is, a clean system) is obtained. A steam blow consists of heating and blowing steam through, and cooling the related piping. The inherent design of the process equipment or steam turbine allows steam to be supplied from the HRSG with the incorporation of temporary piping, materials, and silencer to satisfy steam blow operations.

5.2 EFFECTIVENESS

The effectiveness of steam blow cleaning is determined by observing a polished target located in the temporary piping. Solid particles carried by the steam impact the target and produce pits in its surface. The target is then analyzed by visual observation, in which the amount and size of all pits are determined. A decision is finally made with regard to the line being *adequately* clean, thereby signifying the termination of the particular steam blow.

5.3 TARGET ACCEPTANCE CRITERIA

A mutually agreed steam blow cleaning target acceptance criteria must be developed by the process equipment or steam turbine supplier, Vogt Power, Inc., and the owner as a minimum. The criteria shall establish the type of target, target cleanliness, and target location.

Typically, steam turbine manufacturers have the most stringent acceptance criteria while Vogt Power's criteria is based on the minimum cleaning required to prevent

damage to pressure parts. The owner must balance these two inputs to achieve the life expectancy for the facility.

5.4 MAIN STEAM PIPING

The most satisfactory method of cleaning the steam piping is by means of a heating-cooling and steam blowing cycle. Pressure is built up in the HRSG and main steam header and then released through the temporary piping. The lines cool while the steam pressure is being built up again. The cyclical heating, cooling, and blowing is repeated until the steam emerging from the steam blow piping is observed to be clean. Limiting the cleaning operation to a specific number of blowing cycles, or until the steam blow appears clean, may not always result in adequately clean piping.

The characteristics of HRSGs necessitate some change in cleaning methods as opposed to the acceptable methods used on conventional power boilers. Usually it is not possible for one HRSG, on a typical multi HRSG application, to furnish sufficient steam during a steam blow to obtain the force or cleaning ratio of one for cleaning of the main steam header piping. This prevents utilizing the conventional power boiler sequence of: fire to steam blow pressure, open steam blow valve and allow the pressure to decay to a minimum pressure level, close steam blow valve and repeat process. In addition, the volume of water stored in the HRSG evaporator section and the drum is less than the volume stored in the conventional power boiler and the same generating capacity. Allowing for these differences some combination of the following design and cleaning methods should be given consideration by the Purchaser.

5.4.1 Joint design of field welds should use first pass TIG consumable inserts.

5.4.2 Chemical cleaning of the heat recovery steam generators, the main steam header piping including steam turbine bypass piping prior to cleaning either by mechanical means, steam blow or by a gas steam blow.

5.4.3 Steam generated steam in the HRSG(s) occurs in the unfired mode utilizing the storage capacity as necessary from the deaerator and condenser hotwell to replenish boiler water spent in steam blow.

5.4.4 Gas blow cleaning of combined cycle equipment is restricted to the main steam header piping.

5.4.5 After the completion of any combination of the above, steam turbine operation with a fine mesh screen installed for a prescribed period of time beginning with turbine testing and ending sometime after steam turbine goes into commercial operation.

5.5 STEAM BLOW CONSIDERATIONS

For an effective steam blow, the HRSGs will be operated in the unfired mode. The auxiliary firing capabilities on fired heat recovery boiler applications will not be used during steam blow. The Purchaser shall determine from the plant arrangement what order to select for the steam blow of the HRSGs and the main steam lines.

Generally, the HRSGs are blown separately followed by the combined steam main steam header through the steam process equipment or turbine bypass piping and, finally, a steam blow of the main steam header through the process equipment or steam turbine stop valve(s). If there are two main stop valves, the Purchaser can select to steam blow both valves simultaneously, one valve at one time whichever is most economical, convenient and practical.

The Purchaser should make up or order from the valve supplier the cover plates, one for each main stop valve, to replace the normal stop valve covers. These temporary plates must be designed heavy enough and machined adequately to maintain the desired steam blow pressure without leakage. Pertinent dimensions of the permanent covers will be sent to the Purchaser as a reference for making up temporary plates. If the Purchaser wishes to steam blow one valve at time, he may then use the same plate and pipe for the second stop valve. In this case, the stop valve not being blown through should be covered with its permanent cover. The chemical cleaning fixture should be installed in the turbine stop valve during steam blow to prevent particles from depositing adjacent to the valve seat and plug.

Pressure readings during steam blow should be taken upstream of the boiler stop valves and as close as possible to the steam blow pipe discharge. The latter connection should be made at a convenient location not less than twenty diameters from the discharge end of the blow pipe in order to obtain a stable pressure reading. These readings will help substantiate the calculated steam generator pressure and pipe sizes selected for the steam blow operation.

The number of polished targets required to ascertain that the steam piping is adequately clean will vary dependent on the interpretation of the targets taken from the previous blows.

Following the initial three or four blows for each particular pipe run, when the steam appears to be clean by visual observation, a polished target should then be inserted in the blowpipe discharge for each subsequent blow. The targets can be made of steel, aluminum or copper strips, polished on four sides to obtain use from each.

Adequate communication must be established and maintained between the combustion turbine operation, HRSG operation, and the temporary steam blow valve operation. This might be backed up by a system of visual communication, such as indicating lights, since phone communication may become difficult due to high noise level at the steam blow valve. An arrangement should also be made to record pressure readings at various stations simultaneously through proper communications.

Sufficient reserve feedwater should be available in the deaerator storage tank, condenser hotwell, and reserve feedwater tanks for the steam blow. The Purchaser should provide sufficient time in the steam blow schedule to perform a satisfactory steam blow.

The following equipment and steam piping should be chemically cleaned and steam blown prior to undertaking plant startup testing.

5.5.1 Each HRSG and its steam lines.

5.5.2 The main steam lines and header from each HRSG through to the process equipment or turbine bypass piping just upstream of the turbine bypass desuperheater valve. The process equipment or turbine bypass desuperheater valve must not be in the steam path during steam blow.
The Purchaser shall supply temporary piping including a steam blow valve to be connected at a point just upstream of the turbine bypass desuperheater valve.

5.5.3 The main steam lines and header through to the process equipment or turbine stop valve(s).

5.5.4 The steam seal piping. No acid cleaning of seal steam piping recommended.

The Purchaser shall furnish the temporary piping and the steam blow valve(s). The Purchaser shall determine the arrangement and sizing of the temporary steam blow pipe as well as the type and number of steam blow valve(s) to be used. The steam blow pressure will be built up in the steam piping and released by the operation of the steam blow valve(s). The steam blow valve(s) shall have valve position jogging capabilities.

Several steam generator factors should be considered when steam blow cleaning down HRSGs. These include feedwater quality, drum thermal stresses, and steam generator design application.

Since the steam blow takes place during the initial operation of the plant, design deaeration levels of the feedwater may not be possible. The Purchaser should recognize that there is a risk of corrosion, especially in the economizer tubes, if normal feedwater oxygen levels are not maintained. To correct this situation, catalyzed hydrazine or other oxygen scavenging chemicals may be used during steam blow. This is essential, especially if the steam blow is to take place on a semi-continuous basis.

Steam drum/header thermal stress is potentially highest during the period water is flashing to steam during steam blow. A measure of this stress is the time rate of change of drum/header pressure which can be converted back through saturation temperatures to temperature rate. See the Start Up Procedure in Section I Tab 5 for the allowable pressure/temperature change in the drum/header versus drum/header pressure for the specific application. These curves will take into consideration parameters such as drum/header diameter, wall thickness, steady state stress, and relate this to pressure rise rate.

Due to the rapid decrease in saturation temperature in the HP Drum/Steam Header, relative to pressure below approximately 250 psig (17.2 barg), it is usual to terminate steam blow sequence before this pressure is reached.

The relative volume of evaporator and drum water space is considerably smaller in a heat recovery steam generator relative to that of a modern power boiler of the same steaming capacity. This difference usually necessitates a change in steam blow procedure than that associated with power boilers in order to obtain equivalent blowing times. Due to the inability of obtaining a significant blow time and remain within the drum stress limits, a semi-continuous process is described. Here steam is generated on a continuous basis at lower than rated pressure but slightly greater than rated flow with only a limited amount of flashing taking place. The chief consideration in this method is makeup capability. Usually the hotwell and/or deaerator storage will allow for a 5 to 7 minute blow.

In a heat HRSG steam blow, it must be recognized that the blown steam will have significant superheat. Any temporary piping installed for the blow should be designed for the expected temperature and pressure. Also, the superheater tube velocity should be limited to approximately double the design operating velocity.

When calculating the cleaning force ratios on heat recovery steam generators, it should be remembered that ambient temperature will have a significant affect on steam generation due to the combustion turbine exhaust gas flow characteristic. Highest flows occur at the lowest ambient temperature. The aspect of variable pressure operation may indicate that the best cleaning forces for a steam generator occur under different conditions than those optimum for a steam turbine, i.e.; steam generator steam flow

peaks while operating in the low pressure region (part load mode) and steam turbine peaks at its maximum load point.

For combined cycle units with multiple HRSGs supplying steam to a single turbine, it is unlikely that a single steam generator will be able to produce enough steam to reach a force ratio of one for the main steam header. In such cases, steam blow of the header with simultaneous operation of steam generators, gas blow of the main header, or mechanical cleaning of the header, after individual steam generator blows should be given serious consideration.

5.6 STEAM BLOW PRELIMINARY PREPARATIONS

The Purchaser should size and provide the temporary piping required for the steam blow. This blow piping must be large enough to develop a mass-velocity head in the permanent piping at lest equal to that developed during full-load operation. The size of the temporary piping is usually 8" to 14" (203-356 mm) in nominal diameter when blowing with a boiler pressure of 600 psig (41.4 barg) superheated steam.

Since the force on a particle is proportional to the mass-velocity head of the fluid, it appears reasonable that the mass-velocity head developed during the blowing cycle must be equal to that developed during full-load operation. This should take care of most loose pieces, although the time factor is involved and no one can be sure how long it takes pipe scale to loosen up, or such things as pieces of welding rod to work their way through the pipe lines, superheater and main steam lines.

Calculations can be made to show how much flow and what drum pressure is necessary for an assumed temporary pipe size to get a mass-velocity head during cleaning equal to that attained during full-load operation, based on the following.

5.6.1 As a first attempt, assume that the velocity at the pipe exit to atmosphere during steam blow is sonic, and that the pressure, P_p, just inside the pipe at the exit is 30 psia (2.07 bara). To make this assumption, it is necessary that all flow areas in the system be equal to or larger than the discharge area.

5.6.2 Estimate the steam conditions (pressure, enthalpy) at the boiler outlet expected during steam blow. From the curves on Figure 1, read the mass flow function, F_{30}. Calculate the mass flow, Q_c, as follows:

$$Q_c = F_{30} \times A_p$$

where A_p = area of pipe at discharge (in.^{2})

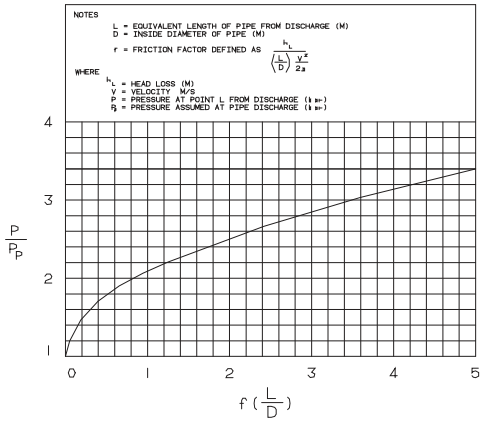

FIGURE 1

5.6.3 It is necessary to calculate the pressure drop through the temporary and permanent piping to arrive at an HRSG drum pressure curve. This curve should be used in determining the pressure drop near the discharge end of the temporary piping since the velocity is near sonic and ordinary calculation of pressure drop due to friction does not apply. In applying this curve, assume as a first trial and L is the total equivalent length to the temporary piping including the equivalent length of elbows, tees., etc., in the temporary system. Calculate the fL/D and enter the curve and thus calculate P, the

pressure at the distance L from the exit. Note that if fL/D of the temporary pipe is ore than 5, use a shorter L which will make fL/D equal 5 and use corresponding P/Pp to calculate P at the shorter L. Where fL/D is greater than 5, the pressure drop is a straight line function of L and can be calculated by conventional method. Then calculate by conventional straight line methods the pressure drop due to friction in the piping from the point L from the exit to the boiler outlet, thus arriving at the boiler outlet pressure Pc.

5.6.4 Calculate the cleaning force ratio at the HRSG outlet using calculated Pc and expected enthalpy. This ratio compares the mass velocity head during cleaning with that during cleaning with that developed during normal full-load operation. The cleaning force ratio is expressed by:

$$R = \left\{ \frac{(Q_c)}{(Q_{max})} \right\}^2 \times \frac{V_c}{V_{max}}$$

where:

Q_c = calculated flow during cleaning (lb/h)

Q_{max} = max load flow (lb/h)

V_c = specific volume at Pc (ft³/lb)

P_c = pressure during cleaning at boiler outlet (psia)

V_{max} = specific volume at Pmax (ft³/lb)

P_{max} = pressure at maximum load flow at boiler outlet (psia)

5.6.5 If this ratio R is less than one and the steam velocity in the superheater tubes is less than twice the allowable, divide the pressure assumed inside pipe (Pp) by this ratio and repeat the above process; thus, the required flow and pressures for equivalent cleaning forces can be determined, establishing the required sizes for the temporary blowpipes. Note that for a discharge pressure different than 30 psia (2.07 bara), the flow function is:

$$Fp = F_{30} \times (Pp/30)$$

The size of the temporary pipe is a most important factor. The use of a larger pipe will result in lesser flows and lesser pressure levels required for the same cleaning force. The size effect is proportional to the ratio of diameters to the fourth power. In no case, however, should the temporary pipe have greater flow area than the permanent piping.

5.6.6 If the ratio R cannot be adjusted to meet a ratio of unity without exceeding twice the allowable steam velocity in the superheater tubes, then the boiler pressure to be used during steam blow can be selected as follows:

Determine the steam generator pressure equivalent to the point where the steam velocity in the superheater tubes is equivalent to twice the allowable, subtract a nominal pressure of 50 psi (3.45 bar) and round off to the next lower practical boiler pressure setting.

For example, if the HRSG pressure calculates to be 683 psi (47.1 bar) for the point where the steam velocity reaches 600 ft/s (183 m/s) then:

683 psi - 50 psi = 633 psi
47.1 bar – 3.45 bar = 43.7 bar

The next lower practical steam generator pressure can be selected either as 600 psi (41.4 bar) or 625 psi (4.31 MPa) and be used as the steam blow release pressure.

5.7 HRSG AND MAIN STEAM LINES STEAM BLOW

5.7.1 Suggested preparations to be made prior to undertaking a steam blow are given as guidance information and the assumption that the process equipment or steam turbine unit has one main stop valve:

5.7.1.1 Check to ensure that the main stop vale is closed tightly.

5.7.1.2 Remove the permanent head and the steam strainer from the main stop valve. It is necessary to plug the pilot passages of the valve during steam blow to keep foreign material out of the assembly. These protective devices should be installed for steam blow and must be removed before starting the process equipment or steam turbine.

5.7.1.3 Install a temporary steam blow cover on the main stop valve. A new gasket is not required. Install the temporary piping to the top

of this plate and run blowpipe out of building to a safe area. A steam blow valve should be installed at some convenient place in the temporary piping.

5.7.1.4 Secure all permanent and temporary piping properly with sufficient flexibility for thermal expansion. Make provisions for taking pressure readings and for adequate communication between plant control.

5.7.1.5 Remove the attemperator nozzle, if applicable, and install a blind flange.

5.7.1.6 Close isolation valves on steam header instrumentation such as pressure transmitters, gauge lines, etc. This will eliminate pockets for foreign matter to collect. Sensing lines necessary for controls used during steam blow must be left open.

5.7.1.7 Hotwell and deaerator level controls as well as boiler feedpump-recirculation controls should be checked out and operational.

5.7.1.8 HRSG drum level controls should be checked out and operational.

5.7.1.9 HRSG pressure and temperature instrumentation as well as damper and motor operated valve controls should be checked out and operational.

5.7.1.10 Steam turbine condenser circulating system should be checked out and operational.

5.7.1.11 The temporary steam blow valve should be power actuated and be able to operate as a control valve with valve position jogging capabilities.

5.7.2 The procedure for blowing down one HRSG is suggested as follows:

5.7.2.1 Fill condenser hotwell and deaerator storage tank to maximum level with feedwater quality water.

5.7.2.2 Start combustion turbine and bring to load point (probably low load for first blow, base load for subsequent blows).

5.7.2.3 Warm up HRSG by admitting small quantities of exhaust gas. Vents, drains, and circulating system are to be operated per instruction book.

5.7.2.4 When pressure is adequate to close HRSG vents, start admitting small quantities of steam to main header to start its warm up.

5.7.2.5 Bring combustion turbine to base load and continue warming main header until it is above saturation temperature for the steam blow pressure. Combustion Turbine exhaust gas flow can be adjusted, vent, drain, and steam blow valve(s) to bring drum pressure to the desired level.

5.7.2.6 When the required HRSG warm up pressure is reached in drum and the header is determined, final build up to steam blow can start by adjusting HRSG gas flow from the CT. Pressure should be held near the calculated steam blow pressure by adjusting the blowdown control valve. Drum water level should be maintained near its high alarm point.

5.7.2.7 After reaching steady state, continue opening the steam blow control valve to allow drum pressure decrease at the allowable rate.

5.7.2.8 To terminate a steam blow, interrupt the CT exhaust gas flow to the HRSG and maintain steam pressure by adjusting the steam blow control valves.

5.7.2.9 The operator should be aware of water levels in the hotwell and deaerator during the blow and remember that some feedwater will be needed during the idle period between blows.

5.7.2.10 After a steam blow is terminated, a small flow of steam will keep the header warm until hotwell and deaerator levels are brought back to starting water levels. The combustion turbine could remain at base load or be adjusted to suit system requirements. The steam blow valve can be throttled to hold the desired HRSG hold pressure during this period.

5.7.2.11 The above steps should be repeated for each HRSG until each unit accomplishes successful steam blow. Then a combined steam blow should be undertaken to clean the main steam header piping

including the process equipment or steam turbine bypass steam piping up to but not through the desuperheating-reducing valve.

5.8 PREPARATORY OPERATIONS

5.8.1 The necessary blanking fixtures, temporary steam blow valve, and temporary piping must be properly sized, installed, and anchored. In addition, calculations must be performed in conjunction with the determined temporary pipe size to allow the mass-velocity developed in the permanent piping to be at least equal to the mass-velocity developed during normal full-load operation.

5.8.2 The calculations allow the corresponding flow and pressure leaving the HRSG to be determined as well as the pressure drop through the temporary and permanent piping. Also, they ensure that particles are carried to and impact the polished target. The appearance of the target will then be representative of an effective steam blow (because, according to Newton's Second Law, the force on a particle is proportional to the mass-velocity) and allow an accurate determination of line cleanliness to be made.

5.8.3 A procedure outlining how the steam blows will be conducted must be developed and reviewed with all involved personnel. It is important that this procedure incorporate all related equipment interfaces, safety precautions, and *steam-blow target-acceptance criteria*. In addition, a summary of the calculated system pressures for each phase of the steam-blowing operation must be included to allow these pressures to be used during the actual operation.

5.8.4 Finally, a sufficient quantity of targets with opposing sides polished to obtain multiple uses must be available. Target material is normally steel, but aluminum or copper may be used.

5.9 ACCEPTANCE CRITERIA

5.9.1 As stated in available literature, primarily from steam turbine manufacturers, a system has been adequately cleaned when a polished target inserted in the blowpipe discharge shows no pitting.

5.9.2 The initial machined targets should not be inserted until 3 to 4 blows have been completed and the steam appears to be clean by visually observing the steam as it exits the temporary discharge pipe. At first, the steam will appear to be an orange-rust color due to the removal of ferric oxide (Fe_2O_3) from the

system. After improvement, a polished target should be installed for each subsequent blow until no pitting exists.

5.9.3 The following drawbacks may exist while attempting to obtain a target that has no pitting, a condition defined as a completely smooth target with the exception of slight discoloration due to heat or water/steam chemistry.

5.9.3.1 If for some reason the temporary pipe has been sized incorrectly or the available steam pressure is inadequate, the overall effectiveness of the steam-blowing operation will be poor. This being the case, the attainment of a completely smooth target may not be indicative of a clean system, as the following shows. Knowing the force on a particle is proportional to the mass-velocity, the pit established by particle M_2 will be much smaller than that developed by particle M_1 and will possibly be nonexistent. Thus, a line cleaned with less than full-load mass-velocity will exhibit an acceptable target that is not representative of a truly clean system.

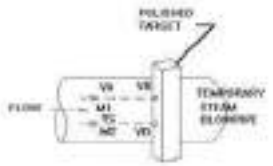

5.9.3.2 The duration of each phase of the steam-blow operation (main steam, cold reheat, and hot reheat) may become excessive and be detrimental to the overall plant startup schedule. Also, the wear

and tear on certain pieces of equipment, which may not receive this type of service normally, will reduce overall plant availability.

5.9.3.3 Realizing that the time required to loosen scale and to move weld beads and other foreign matter through the system is basically indeterminate, the chances of obtaining consecutively clean, smooth targets without an excessive number of blows is not good.

5.9.4 As explained earlier, the key to a successful steam-blowing operation is to obtain the same mass-velocity in the permanent piping that is achieved during normal full-load operation. If this is the case, and knowing that the force on a particle is proportional to the mass-velocity, then a clean, smooth target will be representative and guarantee that the system is clean. This leads us to conclude the following:

5.9.4.1 The mass-velocity developed during the actual steam-blowing operation should be verified to be correct by recording system pressures at the inlet to the process equipment or turbine stop valves and at the discharge of the temporary steam blow pipe. If these pressure, when compared with the original calculated pressures, are in agreement, they will indicate that the proper boiler pressure and temporary pipe size are being used, thus confirming that the permanent piping is being cleaned at its normal full-load mass-velocity.

5.9.4.2 Knowing that the mass-velocity is correct, an interpretation of the target can be performed that will ensure a clean system has been obtained.

5.9.4.3 Realizing that the overall goal is to minimize the wearing effect on the steam path of the process equipment or steam turbine, which can be caused by the large coarse particles as well as small fine particles, it is now practical to have the maximum amount of these particles removed knowing that the mass-velocity is correct.

5.10 Target Appearance

5.10.1 The quantity and type of all pits--raised and unraised must be carefully analyzed concerning overall size and whether or not the force of impact along with the particle's sectional pressure has caused the metal surrounding the pit to raise above the target surface. Sectional pressure is found by dividing the weight of a particle by its maximum cross-sectional area.

5.10.2 In general, the target must be clean with the exception of possible discoloration. Acceptable discoloration should only be a result of heat (for example, heat being applied to cold-rolled steel) and not because of black iron oxide carried in the steam.

5.11 Allowable Pits.

5.11.1 Specifically realizing that the exposed surface of the target consumes only a fraction of the cross-sectional area of the temporary pipe, *the number of unraised pits allowed will be five or fewer.* Furthermore, absolutely no pits resulting from the raising of metal above the target surface are permitted. Realizing that turbulent flow will exist, the *unraised pits* will be restricted to an area on the target that experiences greater than average velocity. The following figure clarifies this point and establishes these boundaries.

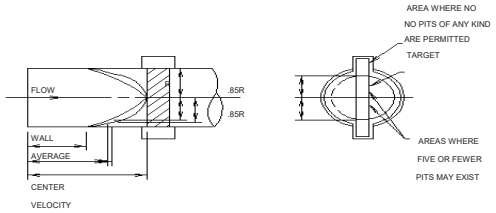

5.11.2 Finally, a total of *five consecutive targets with fewer than five unraised pits per target* must be obtained to conclude that no additional cleaning will be accomplished by continuing the steam-blowing process. This comparison will consist by collecting *three consecutive targets*, allowing the permanent piping and steam generator to cool for 24 hours, reheating and finally collecting *two consecutive targets.* If any of these targets exceeds the pitting criteria, further steam blows must be performed to obtain the correct number of acceptable targets in the specified sequence.

5.11.3 By adapting the acceptance criteria, once a valid comparison has proved that the actual-vs.-calculated-system pressures are alike, the assurance that the system has been effectively cleaned is high. Also, the overall duration of the steam-blowing will be realistic.

6.0. COMMISSIONING

6.1 If not previously completed, inspect the entire unit, consisting of gas ducts, access lanes between module units, stack base, and each manway opening at bottom of modules to be sure that all boiler handholes and manways are tight and ready for start up. Remove all tools and foreign matter from the gas side of the unit. This is particularly true of any combustible debris around the superheater and boiler inlet.

6.2. Make sure no personnel, equipment, or materials are left inside the gas path before closing the duct and casing manways.

6.3. Examine all the auxiliary equipment, making sure that all equipment has been supplied for design conditions and are operable. Examine all lower areas of the unit to make sure adequate expansion clearance has been allowed for and no drain line or header movement will be impeded. Thermal expansion of the SH or RH sections on some units may be as great as 6" in the downward direction.

Remove the hydro-plugs or blinds on the safety valves (as applicable) used for boiler hydrostatic test before starting boilers. As a general rule, safety valves with butt welded inlets will have hydro-plugs, valves with flanged inlets will use blind flanges.

NOTE: The removal of hydro-plugs and any disassembly or setting of the safety valves must be completed by a field serviceman with a "V" stamp. It is recommended that the original valve manufacturer be contacted to ensure that all valve warranties and guarantees are not voided.

6.4 If the feedwater heaters, evaporators, economizers, and superheater modules have not been recently filled with boiler water or stored as per Section II Part 10, open the bottom (intermittent) blowdown valve(s), the feedwater heater drain valves, the economizer drain valve(s), and the superheater drain valves. Open the economizer, steam drum, superheater, reheater, and feedwater heater vent valve(s).

6.5 Allow the unit to drain completely free of all residual water. If boilers have been stored with good boiler grade water, drain only the superheaters.

6.6 Fill the low pressure (LP) boiler through the feedwater inlet. Close the boiler feed line drain valve(s), the economizer drain valve(s) progressively (as water enters each pass), and the boiler bottom drain(s) or blowdown(s) when clean water has

reached the feeder headers. Flush the lines between the low pressure boiler and the boiler feed pumps. Open strainers, flanges, or sections of pipe to flush lines thoroughly. Also make sure all water lines to any attemperators have been flushed thoroughly to avoid plugging any attemperator nozzles.

If lines have been "hard piped" before this operation, it is best to "listen" with an industrial stethoscope or "feel" the valve(s) for temperature increase if using hot water in order to verify lines have flow and are properly flushed.

6.7 Slowly fill all of the boiler(s) using normal feedwater (cool, if available) to a level of about one inch above the bottom of the gauge glass (or until the low water cutout or alarm has cleared). During start up reheater sections will be run dry. Feedwater temperature for each boiler should not be more than 50 °F (28°C) higher than the metal of the drums and headers being filled. If hot water is used, extreme care must be taken to feed the water slowly and vent sufficiently so that a maximum of 15 psig (1 bar) results from the flashing feedwater.

6.8 Re-check all economizer drum vents during this filling and flushing; open until filled and then close to contain water and steam. Open superheater drains.

6.9 When each drum level reaches one inch above the bottom of the gauge glass (or clears the low level cutoff), close the economizer vents and close the boiler feedwater valve(s). Keep the superheater vents and drains open.

6.10 The unit is now ready for exhaust gases (GTE). Start the combustion turbine and bring up to Full Speed No Load (FSNL). Follow the start-up guidelines given in Section I, Tab 5 of this manual.

6.11 As the pressure increases, blow down the steam pressure gauge drain lines, the water columns, water gauge glass drain lines, and all other instrument lines at 1/4, 1/2, 3/4, and full pressure to insure proper flushing and operation of instrumentation and valves.

Close the superheater drains at the pressure recommended in Section I, Tab 5 of this manual.

6.12 On pressures up to 600 psig (41.3 bar), lift the safety valves manually when the steam pressure is 75% of the nameplate pressure to blow the seat clean. The safety valves should then be tested by raising the boiler steam pressure to "set pressure" of each valve to see that it relieves and re-seats at the correct pressure within allowed tolerance. If field testing the safety valves is not practical, each valve should be bench tested by a firm holding an ASME "V" stamp. This should

be done in accordance with all applicable codes. Careful records of the pressures at which these valves relieve and re-seat must be made and signed by all witnesses. ASME Power Boiler Code, Section I, PG 72.3 (A86) states this must be done by the manufacturer or his authorized representative (See Note in Paragraph 6.3).

6.13 Open the non-return bypass line valve(s) during steam line warm-up. The drain valves between the main steam stop valves and the non-return valves should be opened to drain condensate. Allow the steam lines to heat up to saturation temperature, but keep the condensate pockets drained dry.

6.14 As the boiler(s) heats up and the pressure builds, the water level in the gauge glass(es) will rise due to the expansion of the water. As the pressure increases this "swell" effect will cease and the level will be controlled by the level control valves. Care must be taken that the water level is maintained at plus or minus 4" (100mm) of the Normal Water Level (NWL) when the unit is put into service, to prevent water being carried over into the superheater or steam header. The water level should be maintained within the visibility range of the gauge glasses throughout the start up period. The unit should be blown down only if necessary to maintain the water level within the visible range.

6.15 Refer to Section I, Tab 5 for acceptable start up ramp rates and specific start up instructions. Venting of steam may be necessary to maintain the steam pressure. The HP drum ramp rate should be maintained in order to prevent early fatigue failure of boiler components. Outside of this restriction, the boiler can be increased to full load pressure and temperature as fast as the turbine will permit. A hot start from 600 psig (41.4 bar) to full load pressure and temperature is generally faster and sometimes as fast as the turbine will permit.

6.16 When the steam outlet pressure is the same as the line pressure, the lines will be equalized. The main steam stop valve should then be fully opened. As the unit reaches line pressure and is steaming, the non-return valve should travel to the full open position.

6.17 If a steam-turbine generator is the sole or main high pressure steam user, regulate the steam production to accommodate the turbine requirements.

6.19. After a new unit has been brought up to working pressure and temperature, it is important to check all manway bolts for tightness. "Snug up" all loose bolts.

6.20. Platforms, conduit supports, pipe, and ladders must be checked for proper expansion allowance during initial operation.

OPERATION & MAINTENANCE MANUAL

For

Vogt Power International Inc.
Heat Recovery Steam Generators

For

ABPR5 Combined Cycle Cogeneration Plant Project
Amata B. Grimm Power (Rayong) 5 Limited

Vogt Power Project No. 17491

Vogt Power Document No. V17491-OMNE-002

VOLUME 2

OPERATION & MAINTENANCE MANUAL

For

Vogt Power International, Inc.
Heat Recovery Steam Generators

for

Amata B. Grimm Power (Rayong) 5 Limited
ABPR4 Combined Cycle Cogeneration Plant Project

Vogt Power Project No. 17491

Vogt Power Document No. V17491-OMNE-002

Written By: Rattiya Pimchaichon

Reviewed By: Nick Siripun

Revision: 01
Date: 22 June 2018

The purpose of this manual is to suggest procedures for the operation and maintenance of the HRSG and its subsidiary parts. This guide does not cover all variations in equipment, nor does it provide for every possible requirement or contingency. The specific site conditions, staffing, accessibility, and interfacing equipment must be considered when implementing the information provided herein.

Refer to the Vogt Power International Erection Manual for specific information concerning unloading, storage, and installation of the equipment. Refer to the Vogt Power International Training Manual for operator training. Should other information be desired, or particular situations arise that are not addressed in this manual, the matter should be referred to Vogt Power International.

This manual describes the HRSG, its components and ancillaries to aid the Owner in its development of appropriate procedures for operating and maintaining the equipment. It also contains specific design and performance information, including drawings, equipment lists, and data sheets, purely for convenience. However, this document is not contractual, and should not be referred to in contractual matters.

This document contains minimum procedures for operating and maintaining the HRSG components and is intended to assist the operators in planning and scheduling operational and maintenance activities. It is not intended to and does not cover all details or variations in equipment, or provide for every possible contingency.

INDEX

VOLUME 1 – Vogt Power HRSG O&M Manual

SECTION I DESIGN DATA

Tab 1 - Drawing and Document List
Tab 2 - System Design Description
Tab 3 - Safety Valve Data
Tab 4 - Performance Data
Tab 5 - Start-up Procedure
Tab 6 - Gas Side Pressure Drop
Tab 7 - Heating Surface Data
Tab 8 - Boiler Feedwater and Boiler Water
Tab 9 - Performance Prediction

SECTION II OPERATIONAL PROCEDURES

Tab 1 - Safety Precautions
Tab 2 - Suggested Operational Procedure
Tab 3 - Removal from Service, Lay-up, and Long Term Storage
Tab 4 - Tube Failure Analysis
Tab 5 - Troubleshooting Procedures
Tab 6 - Maintenance Checklists
Tab 7 - Pressure Part Life
Tab 8 - Warranty, Inspection and Maintenance Reports and Forms

SECTION III COMMISSIONING PROCEDURES

Tab 1 - Preliminary Filling and Flushing
Tab 2 - Hydrostatic Test
Tab 3 - Alkaline Boilout
Tab 4 - Chemical Cleaning
Tab 5 - Steam Blow Cleaning
Tab 6 - Commissioning

SECTION IV SUBVENDOR MANUALS

Volume 2 – Divert Damper

Volume 3 – Valves and Inline Components

Tab 1 - Control Valves
Tab 2 - Safety Valves
Tab 3 - General Service Valves
Tab 4 - Actuators for General Service Valves
Tab 5 - Strainers
Tab 6 - Steam Sample Nozzles
Tab 7 - Instrument Valves
Tab 8 - Attemperators

Volume 4 – Instrumentation

Tab 1 - Transmitters
Tab 2 Level Gauges and Remote Level indicators
Tab 3 - Thermocouples & Temperature Indicators
Tab 4 - Pressure Gauges and DP Gauges

Volume 5 – Deaerator & Heat Exchanger

Tab 1 - Deaerator

Volume 6 – Miscellaneous Equipment

Tab 1 - Outlet Expansion Joints
Tab 2 - Inlet Expansion Joints
Tab 3 - Steam Silencers
Tab 4 - Pipe Supports
Tab 5 - Flow Elements
Tab 6 - Aircraft Warning Lights
Tab 7 - Stack Silencers

BALTEC IES

SGT-800 DIVERTER DAMPER

OPERATING MANUAL

Client.....Vogt Power International
Client PO No.....V0010431
Client Job No.....V17491
Site Location.....Amata City Industrial Estate, Rayong Province, Thailand
Project Description.....2 off SGT-800 Bypass Exhaust Systems
Manual Prepared by.....DR
Baltec File.....8790-90-0004
Date.....October 2006
Revision Level.....1

VOGT POWER INTERNATIONAL

VOGT POWER INTERNATIONAL

BALTEC IES

DIVERTER DAMPER OPERATING MANUAL

This publication contains essential information for the assembly, installation and safe, efficient operation of the BALTEC IES Diverter Dampers.

Carefully read this publication before assembling and installing the equipment and review this and any associated documentation before commencing the commissioning procedure.

NOTE:
FAILURE TO COMPLY WITH THESE INSTRUCTIONS COULD, UNDER EXTREME CONDITIONS, CAUSE PREMATURE COMPONENT FAILURE, INVALIDATE THE BALTEC WARRANTY AND MAY RESULT PROPERTY DAMAGE.

WARNING!
NEVER STAND UNDERNEATH A PARTIALLY- OR FULLY-OPEN DIVERTER BLADE UNLESS THE COMPLETE DRIVE SYSTEM IS INSTALLED. IF ACCESS TO THE AREA BENEATH THE DIVERTER BLADE IS NECESSARY (EG. TO INSPECT LANDING BARS), IT SHOULD ONLY BE DONE WITH THE DRIVE SYSTEM FULLY INSTALLED AND ONLY WITH THE BLADE STATIONARY. FAILURE TO FOLLOW THESE SAFETY GUIDELINES MAY RESULT IN SERIOUS INJURY OR DEATH.

As part of our warranty conditions, a BALTEC IES engineer must supervise the commissioning procedure and any subsequent inspections associated with the installation. BALTEC IES cannot be responsible for rectification costs or waiting time incurred by their representatives as a result of damage or incorrect installation. BALTEC IES engineering representatives are available for assembly, commissioning and maintenance advice by writing to the below address, or by faxing or telephoning:

BALTEC IES PTY LTD
FACTORY 4, 35 GILBERT PARK DRIVE
KNOXFIELD, VICTORIA, 3180
AUSTRALIA

TEL: +61 3 9763 6711
FAX: +61 3 9763 6799

PLEASE QUOTE OUR CONTRACT NUMBER **8790** IN ALL COMMUNICATIONS.

REVISION LOG

Date	Rev	Pages Affected	Revision Description
21 Oct 2016	1	all	First issue to client

CONTENTS

FOREWORD **5**

1 INTRODUCTION **6**

1.1 System Description 6
1.2 Major Components 6
1.3 Principle of Operation 7
1.4 Seal Air System 7
1.5 Local Control Panel 7

2 DIVERTER CONTROL FROM THE HMI PANEL **8**

2.1 Prior to Operation 8
2.2 HMI Panel – Overview & Function Keys 9
2.3 Starting and Stopping the System 10
2.4 Switching between Local and Remote Operating Mode 10
2.5 Operation in Local Mode 11
2.6 Operation in Remote (DCS) Mode 11
2.7 Status Indicators on the Home Screen 12
2.8 Alarm Screen & Troubleshooting 13

3 DIVERTER OPERATIONAL PHILOSOPHY **14**

3.1 Opening to HRSG 14
3.2 Closing to HRSG 14
3.3 Emergency Closing to HRSG 14
3.4 Slow Opening & Closing 15
3.5 Seal Air System Operation 15
3.6 Appendix A1 – System Alarms 16

FOREWORD

The purpose of this Manual

The aim of this manual is to help the end user gain a greater understanding of the BALTEC Diverter Damper control system by detailing adequate procedures for the operation of the equipment supplied.

The Arrangement of the Manual

The manual is divided into sections, or chapters, each covering logical sub-divisions. The chapters are numbered with single figures, e.g. 1, 2, 3, etc., and may also be divided into sub-sections with decimal numbers following on from the section they are in, e.g. 1.1, 1.2, 1.3 etc.

Whilst every care is taken to ensure that the information in the manual is correct, no liability can be accepted by the authors for loss, damage or injury caused by errors in, or omissions from the information given.

Component manufacturers continually make changes to specifications and recommendations, and these, when notified, are incorporated into our manuals at the earliest opportunity.

1 INTRODUCTION

1.1 System Description

This manual covers the Baltec Electric-Drive Diverter Damper. In this damper, the torque required to move the diverter blade is supplied by a single centrally-mounted electric actuator. The actuator is coupled with splined drive shafts to two right angle bevel gearboxes, and these in turn drive worm gearboxes which are connected directly to the diverter blade pivot shaft.

A local control panel, providing all the features necessary to control the diverter blade locally and remotely, is mounted close to the diverter. The electric actuator is fully self-contained and interfaces directly with the local control panel. In addition to the drive motor, it also contains the necessary limit switches, torque switches and a 4-20mA position transmitter.

Power is supplied to the actuator by a variable speed drive (VSD) fitted inside the local control panel. The VSD allows the diverter blade speed of travel to be precisely controlled. In particular this allows the blade to slow before contacting the mechanical stops and also allows a faster speed for emergency closing.

1.2 Major Components

The control system within the local panel comprises a Siemens S7-1200 series PLC and a Telemecanique AVT-31 series variable speed drive.

The main components / features of the Auma electric actuator are as follows:

- 4.0kW 3-phase 400V 50Hz drive motor, nominal output speed 125rpm
- Three sets of open/close direction limit switches for interface to PLC system
- One set of open/close direction torque switches for interface to PLC system
- 4-20mA electronic position transmitter for remote indication of blade position
- Local dial-type mechanical position indicator
- Hand wheel for emergency manual operation
- Permissible ambient temperature range -25°C to +70°C
- Enclosure sealed to IP67, epoxy painted

The reduction ratios of the gearboxes are as follows:

- Worm drive gearboxes: 52:1
- Right angle bevel gearboxes 8:1
- Overall reduction 416:1

1.3 Principle of Operation

The actuator motor is driven directly by the VSD fitted inside the local control panel. The direction and speed of blade movement is controlled electronically by the PLC via a single +/-10V command signal to the VSD.

The PLC accepts commands from the local panel's HMI pushbuttons and/or the client's central control room (DCS), depending on the operating mode (local or remote). The PLC also monitors inputs from the limit switches and other sensors fitted to the actuator, as well as the switchgear components inside the local panel and the field-mounted transmitters. The PLC controls the VSD if the blade requires moving, and the seal air fan MOVs (motor operated valves) when the seal air system needs to run.

During normal opening and closing of the blade, the actuator motor will be run at approximately 45Hz, giving a nominal 60sec operating time. Over the last 10 degrees of travel in each direction, as indicated by the position transmitter, the frequency will be ramped down gradually to slow the blade. This allows the blade to approach the mechanical stops slowly, thus preventing any possible damage to the blade, blade stops or seals. During emergency closing only, the output frequency will be increased to approximately 60Hz to give a faster than normal closing time (45sec nominal).

Whenever the blade is stationary, regardless of its actual position, it will be safely locked in that position by the worm drive gearboxes, which are self-locking by virtue of their design. This is the case even in the event of a complete power failure.

1.4 Seal Air System

The seal air system will operate in the fully closed and fully open positions. A pair of Seal Air Fans, operating through interconnecting pipe work, supplies air to the interspace between the two rows of diverter blade seals, at a pressure above that of the operating pressure within the duct. This ensures that any leakage is into the duct, not out from it, thus providing 100% isolation of the turbine exhaust gases. The PLC controls the MOVs to direct air to the appropriate section of the diverter, according to the blade position. For this project, the fans are switched directly by the MCC in the client's DCS.

1.5 Local Control Panel

The local control panel contains all the logic and switchgear necessary to control the operation of the diverter and the seal air system. It includes the following major components:

- Main isolator for incoming 3-phase power
- Isolator for incoming 1-phase UPS power (for control system only)
- Circuit breakers for VSD, and internal logic
- Contactor for energising the VSD
- Variable speed drive (VSD) to power the diverter drive actuator
- Programmable Logic Controller (PLC) System with associated I/O modules
- 24VDC Power Supply for the PLC and control system
- Differential Pressure Transmitters for the Seal Air System
- Colour LCD HMI panel for local control and to indicate the Diverter status
- Interface terminals for remote operation and monitoring from the DCS
- Emergency stop button

2 DIVERTER CONTROL FROM THE HMI PANEL

After commissioning, the control of the diverter will normally be done remotely from the client's central control room (DCS), where the diverter blade position should be calculated to suit the operating conditions of the turbine and HRSG. The DCS also controls the operation of the fans. Local control from the control panel is also possible, but usually reserved for commissioning and maintenance purposes.

Please note the following definitions when reading the following sections of this manual:

The **Closed (0%) Position** is defined as the blade being **closed to the HRSG** (open to atmosphere). "Close Diverter" means moving the blade towards the closed position.

The **Open (100%) Position** is defined as the blade being **open to the HRSG** (closed to atmosphere). "Open Diverter" means moving the blade towards the open position.

2.1 Prior to Operation

To enable operation of the Diverter Control System, the following precursor conditions should be met:

- All circuit breakers inside the control panel turned ON
- 3-phase power available and Main Isolator turned ON
- 1-phase UPS power available and UPS Isolator turned ON
- Emergency Stop button RELEASED
- Isolation valves for differential pressure transmitters OPENED
- Manual butterfly valves at Seal Air Fan outlets OPENED
- Motor-operated butterfly valve actuators set to REMOTE mode
- Perform a visual check to ensure integrity of all pipes, hoses, cables and other components connected to the Diverter Damper

2.2 HMI Panel – Overview & Function Keys

The HMI (Human-Machine Interface) Panel indicates at a glance the operational status of the Diverter and its ancillary components, and provides local buttons for opening & closing the Diverter during commissioning and maintenance operations. All normally used functions are contained within the Home Screen, with an Alarm Screen providing specific information on any alarms that may be present. The typical arrangement of the Home Screen is shown in Fig 1 below.

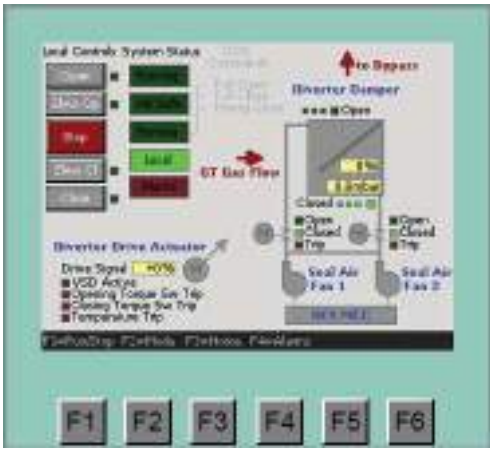

Fig 1. HMI Panel – Home Screen overview

The function keys at the bottom of the HMI have the following function:

- F1 – toggles the system status between Running and Stopped
- F2 – toggles the operating mode between Local and Remote (DCS) Control
- F3 – selects the Home Screen (as shown in Fig 1)
- F4 – selects the Alarm Screen (see section 3.8)

The following information is always displayed on the Home Screen:

- Diverter blade actual position (0~100%)
- Diverter limit and torque switch status (activated/not activated/trip)
- Local Controls (when in Local Mode) or DCS Commands (when in Remote Mode)
- Drive Signal (0~±100%) corresponding to the speed and direction of blade movement. "+" indicates opening direction and "-" indicates closing direction is selected.
- Seal Air MOV status (open/closed/trip)
- Emergency Stop status

Seal Air System differential pressure (mbar) is displayed whenever the diverter is fully open or fully closed, together with an "Air Barrier Safe" indicator if the pressure is above the minimum limit of 2.5mbar.

2.3 Starting and Stopping the System

Simply press function key F1 at the bottom of the HMI to toggle the system between Running and Stopped. The current status is indicated by either illuminating or dimming the 'Running' indicator at the top left of the HMI, as illustrated in Fig 2 below.

When stopped, all diverter ancillary equipment will be inoperable, including the VSD/drive actuator, and both seal air MOVs will be closed. When set to running, normal operation of the system is possible in either Local or Remote mode (see next section).

Whenever the system is running and the blade is in the fully open or fully closed position, the control system will automatically open the MOVs and wait for the DCS to start one seal air fan.

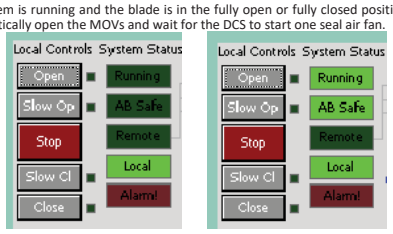

Fig 2. Indication of System Stopped (left) and System Running (right)

NOTE: The system will revert to Stopped and will require the operator to manually switch to Running in the following circumstances:

- On first power-up of the system
- If the UPS power supply to the PLC system has been lost and restored
- If the Emergency Stop button has been pressed and subsequently released

2.4 Switching between Local and Remote Operating Mode

Press function key F2 at the bottom of the HMI to toggle the system between Local and Remote Operating Mode. The current operating mode is indicated by illuminating the appropriate indicator at the top left of the HMI, as illustrated in Fig 3 below.

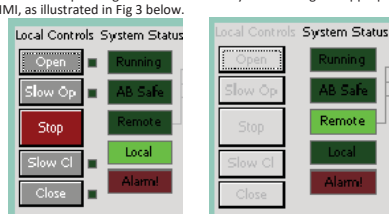

Fig 3. Indication of Local Mode (left) and Remote Mode (right)

2.5 Operation in Local Mode

Local Mode is generally used for commissioning and/or maintenance purposes. When in Local Mode, the Diverter may be opened or closed using the buttons under 'Local Controls' on the HMI touch screen (visible on the left-hand side of Fig 2 and Fig 3). The functions of each button are as follows:

- Open — Moves the diverter blade automatically to the Fully Open position
- Slow Op — Moves the diverter blade at a minimum speed to the Fully Open position. Generally used to safely position the damper prior to initial limit switch & position transmitter adjustment
- Stop — Stops the diverter blade at its current position
- Slow Cl — Moves the diverter blade at a minimum speed to the Fully Closed position. Generally used to safely position the damper prior to initial limit switch & position transmitter adjustment
- Close — Moves the diverter blade automatically to the Fully Closed position

These buttons are latching. For example, "Open" only needs to be touched once to fully open the diverter. In Local Mode, the DCS commands (including Emergency Close) are inoperable and only a shaded outline will be visible on the screen.

2.6 Operation in Remote (DCS) Mode

Remote Mode is expected to be the normal long-term operating mode of the Diverter. In this mode, the control system responds to commands from the client's DCS and the local controls are inoperable and only their shaded outline will be visible on the screen. The status of the DCS commands are shown on the HMI as illustrated in Fig 4, and behaviour is as follows:

- Full Open — Providing the system is running, will Fully Open the diverter blade.
- Full Close — Providing the system is running, will Fully Close the diverter blade.
- Emerg Close — Providing the system is running, will Fully Close the diverter blade at a high speed in an emergency. This overrides all other DCS commands, including Full Open.

NOTE: The local emergency stop button will still function when in remote mode.

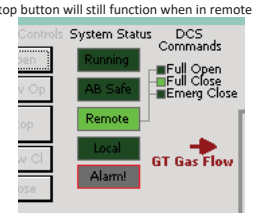

Fig 4. Example of DCS command – "Full Close" command active

2.7 Status Indicators on the Home Screen

The status of all major diverter components is displayed on the Home Screen and illustrated in Fig 5. A green indicator is illuminated for 'running' or to indicate positive status, and a red indicator is illuminated for a 'trip' (fault) condition.

Fig 5. Example of indicators shown on Home Screen. VSD active (left) and MOV trip (right)

When any trip condition occurs (even if not shown on the Home Screen), the Common Alarm indicator will flash red on the Home Screen as shown in Fig 6, and the operator may press F2 to see further details in the Alarm Screen.

Fig 6. Alarm condition indicated (illuminated red)

Limit switches inside the actuator are used to control the fully open or fully closed position. They are voted 2 out of 3, meaning at least two of the three switches need to be activated before the end position is confirmed. An illustration is given in Fig 7 below.

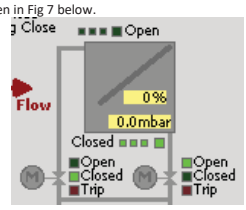

Fig 7. Limit switch indication. Example shows diverter in the fully closed position (3 x closed limit switches activated)

2.8 Alarm Screen & Troubleshooting

Pressing function key F4 will activate the Alarm Screen and give a breakdown of any alarms that are present. Individual alarms are indicated on the Alarm Screen by illuminating a red indicator as shown in Fig 8. Pressing F3 will revert back to the Home Screen.

Fig 8. Trip conditions displayed on the Alarm Screen. Any fault is illuminated in red.

Some alarms may be cleared by pressing the adjacent 'Reset' button on the HMI, however others must be cleared by correcting the condition itself (for example resetting a circuit breaker). A detailed list of the possible alarms, their likely causes and the action necessary to clear the fault is given in Appendix A1.

3 DIVERTER OPERATIONAL PHILOSOPHY

3.1 Opening to HRSG

Opening of the diverter blade will take place in the following circumstances if the system is currently Running:

- System in Local Mode:
  - Open button is pressed on the HMI Panel
- System in Remote Mode:
  - DCS 'Diverter Full Open' signal is received (N.O. contact closes and is maintained closed)

When the local 'Stop' button is pressed or the DCS command removed, the blade speed will be ramped down to zero.

3.2 Closing to HRSG

Closing of the diverter blade will take place in the following circumstances if the system is currently Running:

- System in Local Mode:
  - Close button is pressed on the HMI Panel
- System in Remote Mode:
  - DCS 'Diverter Close' signal is received (N.O. contact closes and is maintained closed)

When the local 'Stop' button is pressed or the DCS command removed, the blade speed will be ramped down to zero.

NOTE: In remote mode when opening or closing, the diverter blade cannot be stopped in the 'exclusion zones' between 0~10% or 90~100%. For example, if the diverter is closing and the 'Full Close' signal is removed at the 7% position, the diverter will continue closing until it is fully closed. As another example, if the diverter is opening and at the 3% position, it will continue opening until the 10% position is reached.

3.3 Emergency Closing to HRSG

Emergency Closing of the diverter blade will take place in the following circumstances, providing the system is currently Running:

- System in Remote Mode:
  - DCS 'Diverter Emergency Close' signal is received (N.C. contact opens)

The Emergency Close command is latching, that is once the command is received the Diverter will continue to the fully closed position even if the emergency close command is removed.

NOTE: If the DCS Emergency Close command is already present when switching to Remote Mode or when starting the system whilst already in remote mode, the emergency close feature will be disabled for safety reasons. It can be reinstated by removing and re-applying the DCS emergency close command, by switching back to Local Mode or by clearing the 'Emerg Close Disabled' alarm on the Alarm Screen.

3.4 Slow Opening & Closing

Slow Opening or Closing of the diverter blade will take place in the following circumstances if the system is currently Running:

- System in Local Mode:
  - Slow Open button or Slow Close is operated on the HMI Panel
  - A position transmitter fault is present and the diverter needs to open or close as per the preceding sections. The blade will stop when the limit switches are activated.

- System in Remote Mode:
  - A position transmitter fault is present and the diverter needs to open or close as per the preceding sections. The blade will stop when the limit switches are activated.

This feature is intended mainly for use during initial setup of the limit switches and/or calibration of the position transmitter, because the blade can be safely positioned to either extremity even if the position transmitter and/or limit switches are out of adjustment.

3.5 Seal Air System Operation

The Seal Air System will automatically operate the MOVs if the system is Running and the Diverter is either fully open or fully closed, irrespective of whether the operating mode is Local or Remote. For this project the fans are controlled directly by the DCS.

Operation of the Seal Air System is as follows:

- HRSG MOV is signaled to open and Bypass MOV is signaled to close (for diverter closed position)
- Bypass MOV is signaled to open and HRSG MOV is signaled to close (for diverter open position)
- The MOVs are monitored by the PLC and an alarm initiated if they do not fully open/close correctly
- The DCS should monitor the 'diverter closed' and 'diverter open' feedback signals from the local control panel and switch on one fan if either condition exists
- HRSG differential pressure (for diverter closed position) or Bypass differential pressure (for diverter open position) is displayed on the HMI in millibar (mbar).
- The AB Safe (Air Barrier Safe) indicator will be illuminated if the dP is above the minimum requirement (2.5mbar), and the 'Air Barrier Safe' signal will be sent to the DCS.
- If the DCS does not receive the 'Air Barrier Safe' signal within approx. 30 seconds of starting the fan, the duty fan should be stopped and the standby fan started by the DCS
- An alarm is initiated by the local control panel after 60 seconds if the minimum required differential pressure cannot be achieved, and both MOVs will be closed to prevent back-flow of hot gas

Normal operating pressure of the fans is anticipated to be around 60-70mbar. A mechanical gauge with pulsation damper is mounted at the discharge of each fan, having a range of 0~1600mmWC (0-160mbar).

NOTE: The fan discharge pressure gauge & the differential pressure transmitters have inline isolation valves. Ensure that all isolation valves are ON (opened) during normal operation of the system. Only turn the isolation valves OFF if the gauge or transmitter requires removal for maintenance or replacement.

In any intermediate position between fully open and fully closed, both MOVs will be closed.

DIVERTER DAMPER
OPERATING MANUAL

3.6 Appendix A1 – System Alarms

Group	Alarm/Trip Condition	Possible Causes	Procedure to Clear Fault
Seal Air System	Differential Pressure Low	DCS is not switching on duty or standby fan	Check DCS logic & feedback signals to DCS
		Fan rotational direction incorrect	Check and correct fan rotational direction
		Local control system not running or emergency stop pressed	Check/reset emergency stop & set system to 'running' mode
		Fan check valve stuck closed	Remove flexible hose and inspect check valve flap
		MOVs not opening fully	Check operation of MOV(s) and reset limit switches if necessary
		Blade is not fully reaching the end position and/or achieving a proper mechanical seal	Check blade positioning and blade seal condition by internal inspection. Re-adjust limit switches and/or blade stops if required
	Bypass or HRSG MOV Fault	MOV has not moved to the required position	Check MOV setup & wiring
	Bypass or HRSG dP Transmitter Fault (signal is not in the range 3.5~20.5mA)	Open circuit or short circuit in transmitter wiring	Check transmitter wiring
		Transmitter calibration	Check transmitter calibration / full scale setting
		Faulty transmitter	Replace transmitter
		Incorrect or reversed connection of instrument tubing to the measuring ports on the diverter	Check tubing installation against drawing and correct

DIVERTER DAMPER
OPERATING MANUAL

Group	Alarm/Trip Condition	Possible Causes	Procedure to Clear Fault
Control System	Surge Suppressor Trip	The surge suppressor module has absorbed a voltage spike caused by a lightning strike or similar	Replace the surge suppressor module
	Emergency Stop Activated	Local Emergency Stop has been activated	Reset local emergency stop with the key
	Emergency Close Disabled	Remote Mode has been selected, or the system has been started, with the DCS Emergency Close command already active	De-activate the emergency close command, switch back to Local Mode or press 'reset' to clear the alarm and proceed with emergency close
VSD	VSD Circuit Breaker	Circuit breaker setting	Check & correct circuit breaker setting
		Actuator overloaded	Check the drive system & diverter blade for mechanical obstructions
		VSD parameters incorrect	Check that VSD is programmed according to project-specific parameter list
		Faulty wiring from VSD to actuator	Check wiring and manually reset the circuit breaker
	VSD Contactor Fault	Contactor has not opened or closed in response to the PLC signal (possibly open circuit coil or welded contacts)	Check / replace contactor or press 'reset' to clear fault and try again
	VSD Internal Fault	VSD has not given a 'healthy' signal to PLC after the contactor closes	Reset VSD faults from the Alarm Screen and re-check
		VSD parameters incorrect	Check that VSD is programmed according to project-specific parameter list
		VSD circuit breaker has tripped while the VSD is active (see above)	Check VSD circuit breaker

DIVERTER DAMPER
OPERATING MANUAL

Group	Alarm/Trip Condition	Possible Causes	Procedure to Clear Fault
Actuator	Actuator Direction Fault	Actuator motor wiring is incorrect, resulting in incorrect rotation.	Check actuator wiring against drawings
	Position Transmitter Fault	Open circuit or short circuit in transmitter wiring	Check transmitter wiring
		Faulty transmitter	Replace transmitter
		Faulty PLC analogue input module	Replace analogue input module
	Open or Closed Limit Switch Fault	Blade is not moving in response to commands due to a VSD or actuator fault	Diagnose problem with drive system
		The three switches are not giving the same signal, or a wire is broken	Check wiring and limit switch adjustment
		The switches are simultaneously indicating diverter open & diverter closed	Check wiring and limit switch adjustment
	Opening or Closing Torque Switch Trip	Actuator overloaded	Check the drive system & diverter blade for mechanical obstructions
		Incorrect adjustment of torque switches	Check and adjust actuator torque switches
	Temperature Trip	Wiring problem	Check torque switch wiring against drawings
		Actuator overloaded	Check the drive system & diverter blade for mechanical obstructions
		Rated duty cycle of actuator has been exceeded	Allow actuator to cool and the fault will automatically clear
		Wiring problem	Check temperature switch wiring against drawings

SGT-800 DIVERTER DAMPER

SEAL AIR FAN
OPERATION AND MAINTENANCE MANUAL

Client ..... Vogt Power International
Client PO No. V0010411
Client Job No. V17491
Site Location ..... Amata City Industrial Estate, Rayong Province, Thailand
Project Description ..... 2-off SGT-800 Bypass Exhaust Systems
Manual Prepared by ..... DR
Baltec File 8790-90-0006
Date ..... October 2016
Revision Level 1

VOGT POWER INTERNATIONAL
Dec 01 2016

VOGT POWER INTERNATIONAL
V17491-ADIE-800-01
16 Nov 2016

This publication contains essential information for the assembly, installation and safe, efficient operation of the BALTEC IES Diverter Dampers.

Carefully read this publication before assembling and installing the equipment and review this and any associated documentation before commencing the commissioning procedure.

NOTE:
FAILURE TO COMPLY WITH THESE INSTRUCTIONS COULD, UNDER EXTREME CONDITIONS, CAUSE PREMATURE COMPONENT FAILURE, INVALIDATE THE BALTEC WARRANTY AND MAY RESULT PROPERTY DAMAGE.

WARNING!
NEVER STAND UNDERNEATH A PARTIALLY- OR FULLY-OPEN DIVERTER BLADE UNLESS THE COMPLETE DRIVE SYSTEM IS INSTALLED. IF ACCESS TO THE AREA BENEATH THE DIVERTER BLADE IS NECESSARY (EG. TO INSPECT LANDING BARS), IT SHOULD ONLY BE DONE WITH THE DRIVE SYSTEM FULLY INSTALLED AND ONLY WITH THE BLADE STATIONARY. FAILURE TO FOLLOW THESE SAFETY GUIDELINES MAY RESULT IN SERIOUS INJURY OR DEATH.

As part of our warranty conditions, a BALTEC IES engineer must supervise the commissioning procedure and any subsequent inspections associated with the installation. BALTEC IES cannot be responsible for rectification costs or waiting time incurred by their representatives as a result of damage or incorrect installation. BALTEC IES engineering representatives are available for assembly, commissioning and maintenance advice by writing to the below address, or by faxing or telephoning:

BALTEC INLET & EXHAUST SYSTEMS PTY LTD
FACTORY 4, 35 GILBERT PARK DRIVE
KNOXFIELD, VICTORIA, 3180
AUSTRALIA

TEL: +61 3 9763 6711
FAX: +61 3 9763 6799

PLEASE QUOTE OUR CONTRACT NUMBER **8790** IN ALL COMMUNICATIONS.

REVISION LOG

Date	Rev	Pages Affected	Revision Description
21 October 2016	1	all	First issue

TABLE OF CONTENTS

FOREWORD **5**
1 INTRODUCTION **6**
1.1 SEAL AIR FAN SPECIFICATIONS 6
1.2 SAFETY PRECAUTIONS 6
2 FAN OPERATION **7**
2.1 INITIAL STARTUP 7
2.2 FAN OPERATION 7
2.3 FAN BALANCE 7
2.4 BEARING VIBRATION LIMITS 8
2.5 VIBRATION DETECTION PROCEDURE 8
2.6 LUBRICATION 8
3 TROUBLE-SHOOTING GUIDE **10**
APPENDIX A – FAN & MOTOR DATA SHEET **12**

FOREWORD

The purpose of this Manual

The aim of this manual is to help the end user gain a greater understanding of the Seal Air Fans installed as part of the Diverter Damper system supplied by BALTEC IES.

The Arrangement of the Manual

The manual is divided into sections, or chapters, each covering logical sub-divisions. The chapters are numbered with single figures, eg. 1, 2, 3, etc, and may also be divided into sub-sections with decimal numbers following on from the section they are in, eg. 1.1, 1.2, 1.3 etc.

Whilst every care is taken to ensure that the information in the manual is correct, no liability can be accepted by the authors for loss, damage or injury caused by errors in, or omissions from the information given.

Component manufacturers continually make changes to specifications and recommendations, and these, when notified, are incorporated into our manuals at the earliest opportunity.

1 INTRODUCTION

1.1 Seal Air Fan Specifications

The seal air fans, supplied by Fans Direct Pty Ltd (under license from Chicago Blower), meet the following specifications:

Table 1 – Seal Air fan technical specifications

Output Volume Flow rate	3000 m^3/hr
Ouput pressure gain	6 kPa
Maximum noise level @ 1m, 1.5m above floor	85 dB (A)
Motor manufacturer	WEG
Motor operating voltage	400V
Motor phase	3 phase
Motor output power	11 kW

1.2 Safety Precautions

The fan supplied is a rotating piece of equipment that can become a source of danger to life, and can cause injury if not properly applied. Maximum operating temperature and speed for which this fan is designed must not be exceeded. These limits are given in this manual. Personnel who will operate this fan, or those who will perform maintenance thereon, must be given a copy of this manual to read, and be warned of the potential hazards of this equipment. This manual contains general recommendations, but attention must also be paid to the specific safety requirements which apply to the individual installation. Such requirements are outlined in federal, state and local safety codes. Strict compliance with these codes, as well as strict adherence to installation instructions, are the responsibility of the user and are necessary to the safe operation of this fan.

Bearing assemblies and drive couplings must be covered so that no rotating element can snag clothing or skin.

Shaft cooling wheels or any other rotating part must be covered.

Any open sheave, pulley, sprocket, belt, chain, and other similar transmission device must be enclosed by guards.

Another potential hazard is the ability of the fan to convey loose material which can be a projectile. Ducts must be protected to prevent objects from entering the airstream. Place suitable guards over inlets and outlets of fans to prevent the entrance of clothing or flesh into the rotating parts.

The housing access doors must not be opened when the fan is in operation. Those on the discharge side of the fan can explode when unbolted.

Proper protection from electrical start of the fan during maintenance is required. A disconnect switch provided with a padlock to prevent operation of the fan is required. In addition, a disconnect switch should be located at the fan for use by personnel working on the fan.

2 FAN OPERATION

2.1 Initial Startup

The following general check lists should act as an aid to the operation of the fans. It is not intended to cover all contingencies and it is assumed that the installing contractor is experienced with this type of equipment, and will follow all good initial startup procedures.

2.2 Fan Operation

Equipment must be installed in accordance with BALTEC instructions and those of the manufacturers of components, and a check must be made for tightness of all hardware and mounting bolts. The fan will then be ready to operate after final safety checks to prevent injury to personnel or damage to the equipment.

1. Lock out power source.
2. Check bearings for cleanliness, burrs and corrosion.
3. Check foundation bolts for tightness.
4. Check inside of housing and duct work for extraneous matter and debris. Secure all access doors.
5. Check wheel position for proper clearance at inlet.
6. Turn wheel by hand, if possible, to see that it rotates freely.
7. Start fan with driver and check for proper rotation direction.
8. Start equipment in accordance with recommendations of Baltec IES.
9. Allow unit to reach full speed, then shut down. During this short period check for vibration or any unusual noise. If any are observed, locate the cause and correct.
10. Lock the power source in "OFF" position.
11. Recheck for tightness of hold down bolts, all set screws and keys, and tighten if necessary. Initial start-up has a tendency to relieve the tightness of nuts, bolts and set screws.

Assuming unit operates satisfactorily, the run-in period must be at least eight hours. Observe bearings a minimum of once each hour during the first eight hours of operation. There need be no concern if the bare hand can be held on the bearing for one second on ambient air fans.

Check the equipment for vibration. If vibration is excessive, stop the fan and determine the cause of vibration. Do not operate until cause has been corrected. See Trouble Shooting Guide, Pages 11-12.

NOTES:

- If the fan is to be stored for long periods of time without operating, the fan must be manually rotated every 2 weeks
- Fans should be stored indoors until ready for installation
- Foundations should be checked to ensure provision has been made for water drainage, in accordance with the foundation drawing
- Once the fans are installed, terminal box gaskets and cable glands must be installed properly to avoid water ingress

2.3 Fan Balance

Heavy rotors and high speeds make dynamic balancing a necessity. This balancing is carefully done at our plant by experienced personnel. Occasionally, mishaps in transportation, handling, operation, or wear, will necessitate rebalancing in the field. The impeller must be rebalanced when mounted on a soft foundation and coupled to its own driver to suit the foundation peculiarities. However, fan motors cannot be balanced or operated on weak or inadequately supported foundations.

Balancing impellers is a delicate operation and requires specialized knowledge, experience, and careful procedures. A balance weight of a few grams incorrectly placed may cause serious damage. For these reasons we strongly recommend that an experienced Chicago Blower factory representative be contacted.

NOTE: Improperly levelled fans can result in vibration problems

2.4 Bearing Vibration Limits

Running fan(s) with high vibration could result in personal injury or property damage.

Vibration amplitudes shown are peak velocity, inches/sec. and are measured in all three planes on bearing housings; vertical, horizontal and axial. See Table 2.

ALARM values are a warning that vibration must be corrected at the earliest possible moment (short term hours).Long term operation, at or exceeding ALARM values, greatly reduces rotor and bearing life/hours and voids the Chicago Blower warranty.

SHUT-DOWN limit signals hazardous operation and requires immediate repair. Operation at this limit could result in injury or property damage.

Table 2 – Vibration Limits for fan during operation.

		Vibration Limit (mm/s)			
ACMA Fan Category	**Balance Grade**	**Factory Tested**	**Field Startup**	**Field Alarm**	**Field Shutdown**
BV-3	G6.3	3.81	6.35	10.16	12.7

NOTES:

1. Vibration Limits are for a fully assembled fan, rigidly mounted.
2. Values are peak velocity (filter out) at fan rotational speed
3. Field vibration level of a fan is not solely dependent upon the balance grade. Installation factors and the mass and stiffness of the supporting system will influence the field vibration level. Therefore, field vibration is not the responsibility of the fan manufacturer.

2.5 Lubrication

The bearings fitted to the fan motors require regular greasing through the grease nipples every 18000 hours of operating. This is to be undertaken while the fan is in operating to ensure even spread of grease on the bearing wearing surfaces.

2.6 Vibration Detection Procedure

For causes of vibration, see the trouble shooting guide on page 11-12.

To insure long life and trouble-free service, a frequent and regular check of all equipment should be made. A preventative maintenance schedule is a necessity for an extended fan life. After approximately one (1) month of operation, all bolts for base, hub, bearing, pedestal, etc. should be retightened.

Potentially damaging conditions are often signalled in advance by changes in vibration and sound. A simple, regular audio-visual inspection of fan operation leads to correction of the condition before expensive damage occurs. Vibration levels should be checked by an approved technician using electronic vibration equipment.

Should vibration become problematic, vibration sensors can be attached to the fan in order to measure vibration in the directions shown in figure 1. Ideal locations for sensor mounting is shown in figure 2, with these positions being dependant on size of sensor and design of fan casing.

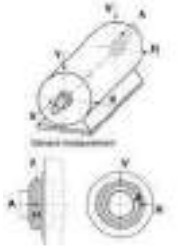

Figure 1 – Vibration measurement directions:
A – Axial
V – Vertical
H – Horizontal

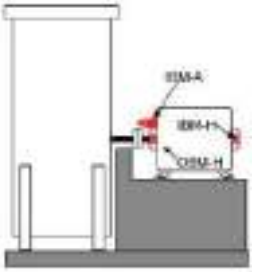

Figure 2 – Vibration sensor ideal locations

Accelerometer Mounting must be as close as possible to the bearing and as close as possible to the centreline. In addition, the accelerometer is firmly attached with a magnet on an even surface which is free of debris, rust and flaking paint. Mounting guidelines are illustrated in figure 3 below.

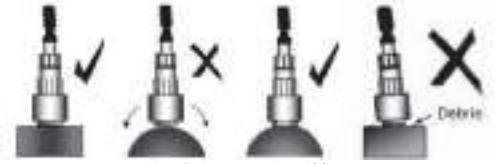

Figure 3 – Sensor mounting guidelines

3 TROUBLE-SHOOTING GUIDE

PROBLEM	CAUSE	REMEDY
VIBRATION	The most common cause of vibration problems is an out of balance fan wheel or rotor.	Check the wheel for dirt or foreign material, especially hard-to-see places like the backside of the wheel and the underside of the blades. Airfoil blades are usually hollow. When exposed to rain or excessive moisture, they can get water inside of them. Drilling one 3/16" drain hole in the upper surface of each blade near the trailing edge should cure the problem. Rebalancing is usually not necessary. Inspect the wheel for erosion or corrosion. Usually wheel erosion will occur at the leading edge of the blade. On a paddle wheel type fan the outer blade tip may also be worn. An airfoil wheel exposed to sand or abrasive dust can actually develop pin holes in the leading edge of the blade. Do all you can to eliminate these damaging conditions and then rebalance the wheel. If the wheel is seriously damaged it will have to be replaced.
	Improper or loose mounting.	Foundation bolts and motor mounting bolts can loosen themselves. Make sure they are tight.
	Loose set screws that hold the wheel to the shaft.	Again tighten the screws, but first be certain the wheel hasn't shifted on the shaft or is rubbing on the inlet cone or drive side of the housing.
	Bent motor shaft.	First, check the shaft with a dial indicator. If bent, the motor armature assembly or the whole motor should be replaced as soon as possible to avoid replacing the entire fan.
	Fan wheel turbulence due to the rotor running backwards.	Since blade angles and shapes vary greatly, it is easy to misread rotor direction. Check for correct wheel rotation, clockwise or counterclockwise, as seen from the drive side.
	Air pulsation.	Fan may be operating in the stall area of its performance curve. That means it is oversized for your particular system or the system resistance is higher than intended. You can lower the system resistance by opening the dampers further (if possible).

PROBLEM	CAUSE	REMEDY
NOISE	Foreign material in the fan housing.	This could be anything from a loosened bolt to somebody's lunch bag. Inspect the wheel and inside of fan housing and clean thoroughly.
	Worn ball or roller bearings (howling, screeching or clicking).	Change the bearings immediately before they cause additional damage. Failing bearings tend to wear the shaft, so you want to be absolutely certain the shaft is full size before installing new bearings. "Mike" the shaft under the bearing and next to it and compare the two readings. If they don't match, replace the motor armature assembly. New bearings installed on a worn shaft will not last long.
	If the fan housing has a metal shaft seal, it could be misaligned and rubbing on the shaft.	Loosen seal plate bolts, recenter the seal on the fan shaft and tighten the bolts. If the seal is fiberglass, cork or rubber, be sure the metal backing plate does not touch the shaft.
OVERHEATED BEARINGS	Motor bearings may be worn and failing	Replace the bearings. Remember to also check the shaft (refer back to the NOISE section)
	Bearing exposed to "heat soak" from an oven or dryer after shutdown.	"Heat soak" occurs when a fan is idle and its shaftcooling wheel can no longer prevent heat from reaching the inboard bearing. Heat from inside the fan can then actually cook the grease. Continue to run the fan for 15 minutes after the heat is removed. This will cool the fan shaft and protect the bearing.
POOR AIR PERFORMANCE	Fan rotation incorrect.	Refer to the Vibration section on the previous page. An easy way to change rotation on most 3-phase motors is to reverse any two motor leads.
	Restrictions in pipework.	Correct one or more of the following conditions. • Make sure manual valves are fully open • Make sure MOV's are set correctly • Make sure that flexible element is in good condition, connected properly and not damaged

APPENDIX A – FAN & MOTOR DATA SHEET

Halifax Fan Ltd.
Brookfoot Business Park, Brighouse, West Yorks, United Kingdom, HD6 2SD
www.halifax-fan.co.uk
Tel:- +44 (0)1484 475123 email:- sales@halifax-fan.com

Performance Data for Halifax No.24.5 Mercury Backward Inclined Fan

Duty Point

Volume Flow Rate:- 3000 m³/hr
Fan Static Pressure:- 5954.77 Pa
Fan Speed:- 2940 RPM
Gas Density:- 1.142 kg/m³

Fan Static Efficiency:- 64.6 %

Outlet velocity:- 20.32 m/s

Power absorbed:- 7.67 kW, Use A 11 kW Motor

Fan Performance Data

Volume m³/hr	FSP Pa	FTP Pa	Power kW	FSE %	FTE %	Outlet Velocity m/s
0	5678.2	5678.2	1.19	0	0	0
461	5787.4	5792.97	2.19	33.8	33.9	3.13
923	5878.39	5900.67	3.19	47.3	47.5	6.25
1384	5932.99	5983.11	4.18	54.5	55	9.38
1846	5976.67	6065.77	5.19	59.1	60	12.5
2307	5991.23	6130.46	6.16	62.3	63.7	15.63
2769	5976.67	6177.16	7.17	64.1	66.2	18.75
3000	5954.77	6191.55	7.67	64.6	67.2	20.32
3230	5932.99	6205.87	8.17	65.2	68.2	21.88
3692	5842	6198.41	9.19	65.2	69.2	25.01
4153	5705.86	6156.95	10.19	64.6	69.7	28.13
4614	5514.41	6071.31	11.2	63.1	69.5	31.26
5076	5277.82	5951.67	12.27	60.7	68.4	34.38
5537	5023.02	5824.96	13.34	57.9	67.2	37.51
5999	4731.83	5673	14.4	54.7	65.6	40.63
6460	4395.51	5487.04	15.47	51	63.6	43.76
6922	3985.66	5238.69	16.6	46.2	60.7	46.89
7383	3512.48	4938.15	17.7	40.7	57.2	50.01
7844	2991.98	4601.42	18.82	34.6	53.3	53.14
8306	2424.16	4228.52	19.89	28.1	49	56.26
8767	1819.94	3830.35	20.85	21.3	44.7	59.39
9229	1128.36	3355.97	21.71	13.3	39.6	62.51
9690	327.59	2783.53	22.52	3.9	33.3	65.64
9875	7.28	2557.67	22.76	0.1	30.8	66.89

Calc By - Elvis Zhuang Date - 12/04/16

All copyright held in this document is vested in Halifax Fan Ltd. It contains proprietary information and may not be disclosed to any third party or reproduced in any form without the written permission of Halifax Fan Ltd.

Halifax No.24.5 Mercury Backward Inclined Fan Performance Curve

Operating Conditions :- Fan Speed - 2950 RPM Gas Density - 1.142kg/m³

Halifax Fan Ltd
Brookfoot Business Park, Brighouse
West Yorks, United Kingdom, HD6 2SD
email:- sales@halifax-fan.com
Tel:- +44 (0)1484 475123

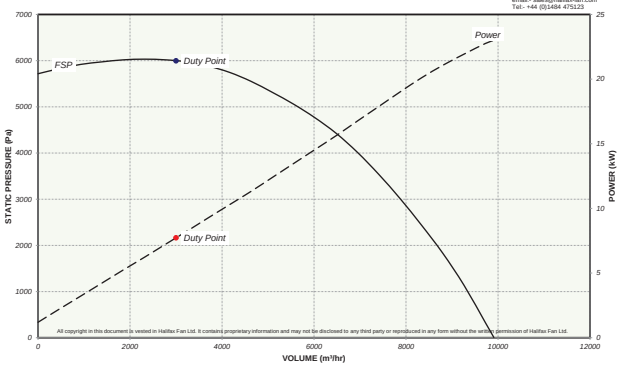

PLOT BY - Elvis Zhuang , DATE - 12/04/16 , CURVE NUMBER - N/A

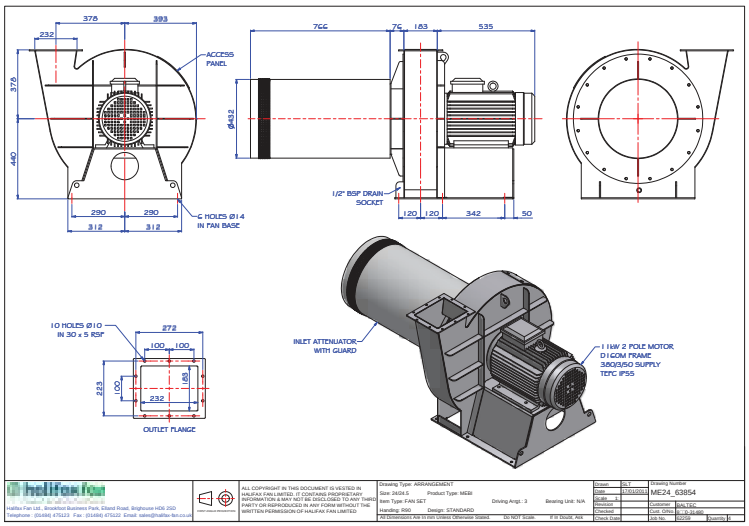

www.weg.net/au

W21 Performance Data - 2 Pole

Part No.	Output kW	IEC Frame	Rated speed (rpm)	Full load current I (A)	Locked rotor current I_L/I_n	Full load torque T (Nm)	Locked rotor torque T_L/T_n	Break-down torque T_b/T_n	400 V % of full load Efficiency η 50	75	100	Power factor (Cos φ) 50	75	100	Sound pressure level dB (A)	Moment of Inertia J (kgm²)	Max. locked rotor time(s) Cold	Hot	Approx Weight (kg)
2 Pole - 3000 rpm - 50 Hz - Aluminium Frame																			
K07 ALW21	0.18	63	2785	0.53	4.6	0.59	2.9	2.8	54.1	60.9	62.6	0.50	0.64	0.75	52	0.0001	62	28	6.2
K1 ALW21	0.25	63	2775	0.73	4.7	0.88	3.2	2.9	55.9	62.7	64.5	0.49	0.63	0.74	52	0.0002	53	24	6.7
K3 ALW21	0.37	63	2745	0.88	5.2	1.27	2.8	2.6	68.0	72.5	72.5	0.58	0.72	0.81	52	0.0002	31	14	8.0
K5 ALW21	0.55	71	2795	1.23	5.3	1.86	2.7	2.7	68.9	71.7	72.5	0.65	0.79	0.86	56	0.0004	33	15	8.5
K7 ALE2W21	0.75	80	2850	1.56	7.0	2.55	3.2	3.7	77.8	82.4	82.4	0.65	0.75	0.81	59	0.0008	44	20	11.0
K9 ALE2W21	1.1	80	2835	2.26	7.8	3.72	3.4	3.4	80.2	82.7	83.7	0.58	0.72	0.81	59	0.0010	33	15	13.8
K11 ALE2W21	1.5	90S/L	2865	3.05	7.3	5.00	2.8	2.8	82.8	84.8	84.6	0.60	0.73	0.81	62	0.0021	22	10	15.4
K15 ALE2W21	2.2	90S/L	2875	4.39	8.4	7.35	3.7	3.5	84.0	86.5	87.1	0.58	0.72	0.80	62	0.0027	20	9	18.4
K22 ALE2W21	3	100L	2900	5.51	8.9	9.90	3.0	3.1	84.0	86.7	88.0	0.69	0.81	0.86	67	0.0067	22	10	26.4
K192 ALE2W21	4	112M	2910	7.27	8.2	13.1	2.7	3.4	87.0	88.8	89.0	0.68	0.81	0.86	64	0.0084	37	17	39.4
K20 ALE2W21	5.5	132S	2940	10.1	8.0	17.9	2.7	3.2	88.4	90.2	90.3	0.68	0.78	0.84	67	0.0206	42	19	55.2
K24 ALE2W21	7.5	132S	2915	13.8	6.8	24.6	2.2	2.9	87.3	88.3	88.7	0.67	0.79	0.85	67	0.0198	29	13	63.2
K27 ALE2W21	9.2	132M	2920	17.1	7.6	30.1	2.5	3.2	87.6	88.6	89.0	0.65	0.77	0.84	67	0.0234	22	10	71.1
2 Pole - 3000 rpm - 50 Hz - Cast Iron Frame																			
K29 E2W21	11	160M	2955	19.9	8.5	35.6	2.8	3.3	89.8	92.1	92.5	0.66	0.77	0.83	70	0.053	31	14	110
K31 E2W21	15	160M	2950	26.5	8.2	48.6	2.4	3.3	90.8	92.2	92.7	0.70	0.80	0.85	70	0.0588	24	11	115
K33 E2W21	18.5	160L	2950	33.3	8.8	60.0	2.5	3.2	91.0	92.0	92.0	0.70	0.80	0.83	70	0.0677	22	10	136
K36 E2W21	22	180M	2955	38.3	8.6	71.1	2.7	3.3	92.5	93.8	94.0	0.73	0.82	0.85	70	0.1192	31	14	180
K37 E2W21	30	200L	2965	51.9	7.4	96.7	2.7	2.8	93.0	94.2	94.6	0.73	0.81	0.85	74	0.2063	68	31	245
K39 E2W21	37	200L	2965	63.3	7.6	120	2.7	2.7	93.0	94.0	94.6	0.72	0.82	0.86	74	0.2242	55	25	260
K41 E2W21	45	225S/M	2970	75.1	8.5	145	2.4	2.9	92.5	93.7	93.7	0.80	0.87	0.89	82	0.4485	40	18	411
K43 E2W21	55	250S/M	2970	91.5	8.9	177	2.6	3.4	92.8	94.0	94.0	0.80	0.86	0.88	82	0.5023	33	15	490
K45 E2W21	75	250S/M	2965	123	8.5	241	3.0	3.4	92.5	94.0	94.5	0.81	0.87	0.90	82	0.5561	22	10	490
K47 E2W21	90	280S/M	2980	149	8.2	289	2.2	2.8	93.5	94.8	94.8	0.77	0.85	0.88	83	1.4100	92	42	780
K49 E2W21	110	280S/M	2975	182	8.0	353	2.3	2.8	93.8	94.8	95.0	0.80	0.86	0.88	83	1.5100	44	20	830
K61 E2W21	132	315S/M	2975	215	7.8	423	2.2	2.7	94.1	95.4	96.0	0.80	0.87	0.89	83	1.7400	70	32	900
K51 E2W21	150	315S/M	2975	243	7.9	482	2.2	2.7	94.5	95.4	95.4	0.82	0.88	0.90	83	2.1200	68	31	1010
K162 E2W21	160	315S/M	2975	260	7.8	515	2.2	2.5	94.5	95.4	95.4	0.83	0.88	0.89	83	2.1200	73	33	1010
K53 E2W21	185	315S/M	2975	308	8.2	594	2.4	2.8	94.4	95.6	95.6	0.78	0.84	0.87	83	2.1200	62	28	1010
K202 E2W21	200	315S/M	2980	335	7.9	641	2.2	2.9	95.0	95.6	95.6	0.70	0.82	0.86	83	2.1700	108	49	1045
K55 E2W21	220	355M/L	2990	349	8.5	704	2.2	3.0	94.5	95.6	95.6	0.83	0.89	0.91	81	5.1700	143	65	1650
K57 E2W21	250	355M/L	2985	392	7.8	800	1.7	2.5	95.4	96.3	96.4	0.86	0.91	0.92	81	5.7500	143	65	1750
High-Output Design - Reduced Frame																			
K29/1 E2W21	11	132M	2930	19.7	7.6	35.9	2.4	3.2	89.3	90.6	90.6	0.72	0.82	0.86	67	0.0318	29	13	78.5

Mounting Configurations

Part numbers for alternative mounting configurations

K11 ALE2W21 = W21 E2 General Purpose, B3 (Foot Mounted)
M11 ALE2W21 = W21 E2 General Purpose, B5 (Flange Mounted)
L11 ALE2W21 = W21 E2 General Purpose, B35 (Foot & Flange Mounted)

Notes:

1) Standard voltage:

		50 Hz	60 Hz
Up to 100 frame	Δ	220-240 V	380-415 V
	Y	380-415 V	440-480 V
From 112 to 355 frame	Δ	380-415 V	440-480 V
	Y	660-690 V	760-830 V

2) The values shown are subject to change without prior notice.
To obtain actual values prior to order placement contact your nearest WEG office.
3) Efficiency test method B as per AS/NZS 1359.5-2004.
4) Noise level is mean sound pressure at 1 meter as per AS 60034.9 standard.

W21 Mechanical Data

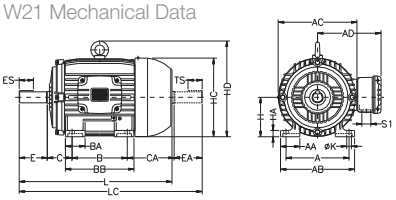

Notes applicable to pages 8 & 9:

- ** Shaft dimensions for 2 pole only.*
- *** Applicable to 4, 6, 8 pole motors.*
- *For Frame 100L, 3 kW, 4 pole E2 line, the L dimension is 420 mm and LC dimension is 475 mm.*
- *All dimensions are given in mm.*
- *The values shown are for horizontal mounting applications with direct coupling.*
- *Customers must notify WEG of applications for vertical mounting or with pulleys.*
- *For certified drawing dimensions, please contact WEG.*

Main Dimensions (mm)																			Bearings	
IEC Frame	A	AA	AB	AC	AD	B	BA	BB	C	CA	H	HA	HC	HD	K	L	LC	S1	D.E.	N.D.E.
63	100	21	116	125	119	80	22	95	40	78	63	8	124	N/A	7	216	241	M20x 1.5	6201-ZZ	6201-ZZ
71	112	30	132	141	127	90	38	114	45	88	71	12	139	N/A	7	248	276	M20x 1.5	6203-ZZ	6202-ZZ
80	125	35	149	159	136	100	40	126	50	93	80	13	157	N/A	10	276	313	M20x 1.5	6204-ZZ	6203-ZZ
90S	140	38	164	179	155	100	42	131	56	104	90	15	177	N/A	10	304	350	M20x 1.5	6205-ZZ	6204-ZZ
90L	140	38	164	179	155	125	42	156	56	104	90	15	177	N/A	10	329	375	M20x 1.5	6205-ZZ	6204-ZZ
100L	160	49	188	199	165	140	50	173	63	118	100	16	198	N/A	12	376	431	M20x 1.5	6206-ZZ	6205-ZZ
112M	190	48	220	222	184	140	50	177	70	128	112	18.5	235	280	12	393	448	M25x 1.5	6307-ZZ	6206-ZZ
132S	216	51	248	270	212	140	55	187	89	150	132	20	274	319	12	452	519	M25x 1.5	6308-ZZ	6207-ZZ
132M	216	51	248	270	212	178	55	225	89	150	132	20	274	319	12	490	557	M25x 1.5	6308-ZZ	6207-ZZ
160M	254	64	308	312	255	210	65	254	108	174	160	22	317	370	14.5	598	712	2x M32x 1.5	6309-C3	6209-C3
160L	254	64	308	312	255	254	65	298	108	174	160	22	317	370	14.5	642	756	2x M32x 1.5	6309-C3	6209-C3
180M	279	80	350	358	275	241	75	294	121	200	180	28	360	413	14.5	664	782	2x M40x 1.5	6311-C3	6211-C3
180L	279	80	350	358	275	279	75	332	121	200	180	28	360	413	14.5	702	820	2x M40x 1.5	6311-C3	6211-C3
200M	318	82	385	396	300	267	85	332	133	222	200	30	402	464	18.5	729	842	2x M50x 1.5	6312-C3	6212-C3
200L	318	82	385	396	300	305	85	370	133	222	200	30	402	464	18.5	767	880	2x M50x 1.5	6312-C3	6212-C3
225S/M 2P*	356	80	436	476	373	286	105	391	149	280	225	34	466	537	18.5	817	966	2x M50x 1.5	6314-C3	6314-C3
225S/M**	356	80	436	476	373	311	105	391	149	255	225	34	466	537	18.5	847	995	2x M50x 1.5	6314-C3	6314-C3
250S/M 2P*	406	100	506	476	373	311	138	449	168	312	250	42	491	562	24	923	1071	2x M63x 1.5	6314-C3	6314-C3
250S/M**	406	100	506	476	373	349	138	449	168	274	250	42	491	562	24	923	1071	2x M63x 1.5	6316-C3	6314-C3
280S/M 2P*	457	100	557	600	468	368	142	510	190	350	280	42	578	668	24	1036	1188	2x M63x 1.5	6314-C3	6314-C3
280S/M**	457	100	557	600	468	419	142	510	190	299	280	42	578	668	24	1066	1218	2x M63x 1.5	6319-C3	6316-C3
315S/M 2P*	508	120	628	600	497	406	152	558	216	376	315	52	613	703	28	1126	1274	2x M63x 1.5	6314-C3	6314-C3
315S/M**	508	120	628	600	497	457	152	558	216	325	315	52	613	703	28	1156	1308	2x M63x 1.5	6319-C3	6316-C3
355M/L 2P*	610	140	750	816	685	560	200	760	254	467	355	50	725	834	28	1396	1561	2x M63x 1.5	6316-C3	6314-C3
355M/L**	610	140	750	816	685	630	200	760	254	397	355	50	725	834	28	1466	1661	2x M63x 1.5	6322-C3	6319-C3

Standard Mounting Configurations and Symbols

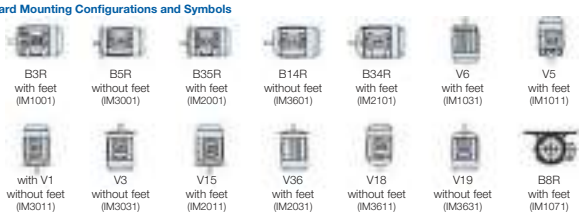

Note: The terminal box can be supplied on top (stock standard), right or left side viewing the motor from the D.E. shaft. This information must be indicated on purchase order.

W21 Mechanical Data

Shaft Dimensions

Drive End (D.E.)

Non Drive End (N.D.E.)

Shaft Dimensions (mm)																
IEC Frame	D.E. shaft dimensions							N.D.E. shaft dimensions								
	ØD	E	ES	F	G	GD	d1	ØDA	EA	TS	FA	GB	GF	d2
63	11j6	23	14	4	8.5	4	EM4	9j6	20	12	3	7.2	3	EM3
71	14j6	30	18	5	11	5	DM5	11j6	23	14	4	8.5	4	EM4
80	19j6	40	28	6	15.5	6	DM6	14j6	30	18	5	11	5	DM4
90S	24j6	50	36	8	20	7	DM8	16j6	40	28	5	13	5	DM6
90L	24j6	50	36	8	20	7	DM8	16j6	40	28	5	13	5	DM6
100L	28j6	60	45	8	24	7	DM10	22j6	50	36	6	18.5	6	DM8
112M	28j6	60	45	8	24	7	DM10	24j6	50	36	8	20	7	DM8
132S	38k6	80	63	10	33	8	DM12	28j6	60	45	8	24	7	DM10
132M	38k6	80	63	10	33	8	DM12	28j6	60	45	8	24	7	DM10
160M	42k6	110	80	12	37	8	DM16	42k6	110	80	12	37	8	DM16
160L	42k6	110	80	12	37	8	DM16	42k6	110	80	12	37	8	DM16
180M	48k6	110	80	14	42.5	9	DM16	48k6	110	80	14	42.5	9	DM16
180L	48k6	110	80	14	42.5	9	DM16	48k6	110	80	14	42.5	9	DM16
200M	55m6	110	80	16	49	10	M20	48k6	110	80	14	42.5	9	M20
200L	55m6	110	80	16	49	10	M20	48k6	110	80	14	42.5	9	M20
225S/M 2P*	55m6	110	100	16	49	10	M20	55m6	110	100	16	49	10	M20
225S/M**	60m6	140	125	18	53	11	M20	60m6	140	125	18	53	11	M20
250S/M 2P*	60m6	140	125	18	53	11	M20	60m6	140	125	18	53	11	M20
250S/M**	70m6	140	125	20	62.5	12	M20	60m6	140	125	18	53	11	M20
280S/M 2P*	65m6	140	125	18	58	11	M20	60m6	140	125	18	53	11	M20
280S/M**	80m6	170	160	22	71	14	M20	65m6	140	125	18	58	11	M20
315S/M 2P*	65m6	140	125	18	58	11	M20	60m6	140	125	18	53	11	M20
315S/M**	85m6	170	160	22	76	14	M20	65m6	140	125	18	58	11	M20
355M/L 2P*	75m6	140	125	20	67.5	12	M20	60m6	140	125	18	53	11	M20
355M/L**	100m6	210	200	28	90	16	M24	80m6	170	160	22	71	14	M20

FC Flange IEC B14A, B14B & NEMA C

Mounting configurations B14, B34, V18, V19

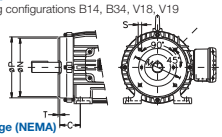

FC Flange (NEMA)

IEC Frame	"FC" flange dimensions (mm)							No. of holes
	Flange	C	ØM	ØN	ØP	S	T	
63	FC-95	40	95.2	76.2	143	UNC 1/4" x20	4	4
71	FC-95	45	95.2	76.2	143	UNC 1/4" x20	4	4
80	FC-95	50	95.2	76.2	143	UNC 1/4" x20	4	4
90S&L	FC-149	56	149.2	114.3	165	UNC 3/8" x16	4	4
100L	FC-149	63	149.2	114.3	165	UNC 3/8" x16	4	4
112M	FC-184	70	184.2	215.9	225	UNC 1/2" x13	6.3	4
132S&M	FC-184	89	184.2	215.9	225	UNC 1/2" x13	6.3	4
160M&L	FC-184	108	184.2	215.9	225	UNC 1/2" x13	6.3	4
180M&L	FC-228	121	228.6	266.7	280	UNC 1/2" x13	6.3	4
200M&L	FC-228	133	228.6	266.7	280	UNC 1/2" x13	6.3	4
225S/M	FC-279	149	279.4	317.5	395	UNC 5/8" x11	6.3	8
250S/M	FC-355	168	355.6	406.4	455	UNC 5/8" x11	6.3	8
280S/M	FC-355	190	355.6	406.4	455	UNC 5/8" x11	6.3	8
315S/M	FC-368	216	368.3	419.1	455	UNC 5/8" x11	6.3	8
355M/L	FC-368	254	368.3	419.1	455	UNC 5/8" x11	6.3	8

C-DIN Flange (DIN 42677) (B14A)

IEC Frame	"C" DIN flange dimensions (mm)							No. of holes
	Flange	C	ØM	ØN	ØP	S	T	
63	C-90	40	75	60	90	M5	2.5	4
71	C-105	45	85	70	105	M6	2.5	4
80	C-120	50	100	80	120	M6	3	4
90S&L	C-140	56	115	95	140	M8	3	4
100L	C-160	63	130	110	160	M8	3.5	4
112M	C-160	70	130	110	160	M8	3.5	4
132S&M	C-200	89	165	130	200	M10	3.5	4
160M&L	C-250	108	215	180	250	M12	4	4

C-DIN Flange "Higher" (DIN 42677) (B14B)

IEC Frame	"B14B" DIN flange dimensions (mm)							No. of holes
	Flange	C	ØM	ØN	ØP	S	T	
63	FG 063CD120GG	40	100	80	120	M6	3	4
71	FG 071CD140GG	45	115	95	140	M8	3	4
80	FG 080CD160GG	50	130	110	160	M8	3.5	4
90	FG 090CD160GG	56	130	110	160	M8	3.5	4
100	FG 100CD200GG	63	165	139	200	M10	3.5	4
112	FG 112CD200GG	70	165	130	200	M10	3.5	4

FF Flange (IEC)

Mounting configurations B35, B5, V1, V3, V15, V36

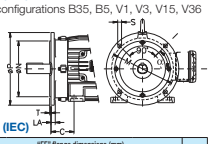

FF Flange (IEC)

IEC Frame	"FF" flange dimensions (mm)									No. of holes
	Flange	C	LA	ØM	ØN	ØP	T	S	α	
63	FF-115	40	9	115	95	140	3	10	45°	4
71	FF-130	45	9	130	110	160	3.5	10	45°	4
80	FF-165	50	10	165	130	200	3.5	12	45°	4
90S&L	FF-165	56	10	165	130	200	3.5	12	45°	4
100L	FF-215	63	11	215	180	250	4	15	45°	4
112M	FF-215	70	11	215	180	250	4	15	45°	4
132S&M	FF-265	89	12	265	230	300	4	15	45°	4
160M&L	FF-300	108	18	300	250	350	5	19	45°	4
180M&L	FF-300	121	18	300	250	350	5	19	45°	4
200M&L	FF-350	133	18	350	300	400	5	19	45°	4
225S/M	FF-400	149	18	400	350	450	5	19	22°30'	8
250S/M	FF-500	168	18	500	450	550	5	19	22°30'	8
280S/M	FF-500	190	18	500	450	550	5	19	22°30'	8
315S/M	FF-600	216	22	600	550	660	6	24	22°30'	8
355M/L	FF-740	254	22	740	680	800	6	24	22°30'	8

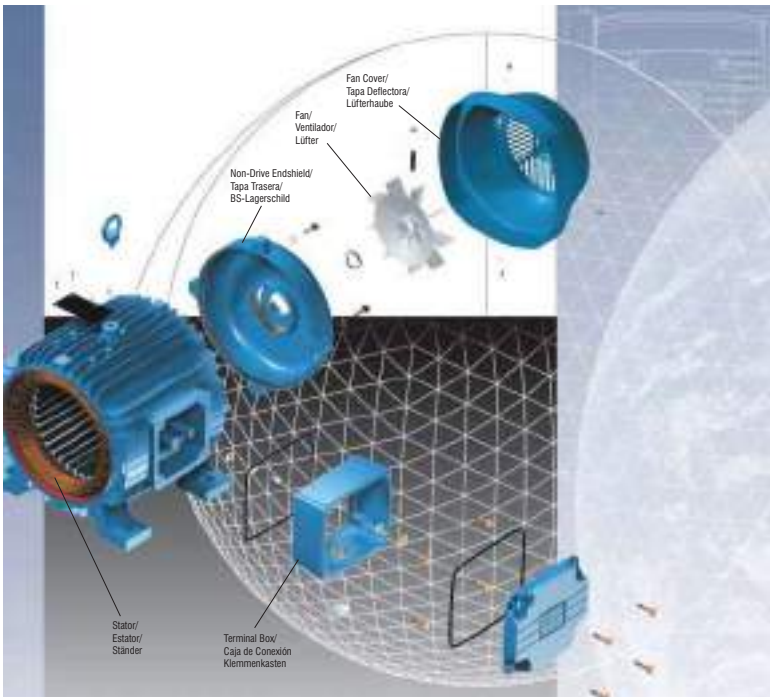

Installation and Maintenance Manual for Electric Motors

Manual de Instalación y Mantenimiento de Motores Eléctricos

Aufstellungs - Und Wartungsanleitungen für Elektrische Motoren

MOTORS AND DRIVES

FOREWORD

The electric motor is an equipment widely used by man in the industrial development as most of the machines he has been inventing depend on it.
Taking into consideration the prominent role the electric motor plays on people's life, it must be regarded as a prime power unit embodying features that require special care including its installation and maintenance in order to ensure perfect operation and longer life to the unit. This means that the electric motor should receive particular attention.
The INSTALLATION AND MAINTENANCE MANUAL FOR LOW VOLTAGE THREE-PHASE INDUCTION MOTORS intends to assist those who deal with electric machines facilitating their task to preserve the most important item of the unit:

THE ELECTRIC MOTOR.

WEG

TABLE OF CONTENTS

1 - INTRODUCTION 1-03
2 - BASIC INSTRUCTIONS 1-03
2.1 - General Instructions 1-03
2.2 - Delivery 1-03
2.3 - Storage 1-03

3 - INSTALLATION 1-04
3.1 - Mechanical Aspects 1-04
3.1.1 - Foundation 1-04
3.1.2 - Types of bases 1-04
3.1.3 - Alignment 1-04
3.1.4 - Coupling 1-05
3.2 - Electrical Aspects 1-09
3.2.1 - Power Supply System 1-09
3.2.2 - Starting of Electric Motors 1-09
3.2.3 - Motor Protection 1-10
3.3 - Start-up 1-11
3.3.1 - Preliminary Inspection 1-11
3.3.2 - The First Start-up 1-11
3.3.3 - Operation 1-12
3.3.4 - Stopping 1-12

4 - MAINTENANCE 1-14
4.1 - Cleanliness 1-14
4.2 - Lubrication 1-14
4.2.1 - Lubrication Intervals 1-14
4.2.2 - Quality and Quantity of Grease 1-14
4.2.3 - Lubrication Instructions 1-14
4.2.4 - Replacement of Bearings 1-14
4.3 - Miscellaneous Recommendations 1-15

5 - ABNORMAL SITUATIONS DURING OPERATION 1-19

1 - INTRODUCTION

This manual covers all WEG asynchronous induction squirrel cage motors, that is, three phase motors in frames 63 to 355, and single-phase motors.
The motors mentioned in this manual are subject to continuous improvement. Therefore, any information is subject to change without prior notice.
For further details, please contact WEG.

2 - BASIC INSTRUCTIONS

2.1 - GENERAL INSTRUCTIONS

All personnel involved with electrical equipment, either installation, operation or maintenance should be well-informed and updated concerning the safety norms and principles that govern the work and, furthermore, they are advised to heed them. Before work commences, it is the responsibility of the person in charge to ascertain that these have been duly complied with and to alert his personnel of the inherent hazards of the job in hand.
It is recommended that these tasks be undertaken by qualified personnel.
Fire fighting equipment, and notices concerning first aid should not be lacking at the work site; these should be visible and accessible at all times.

2.2 - DELIVERY

Prior to shipment, motors are factory-tested and dynamically balanced. With half key to ensure perfect operation.
Upon receipt, we recommend careful handling and a physical checking for any damage which may have occured during transportation.
In the event of any damage, both the nearest WEG sales office and the carrier should be informed immediately.

2.3 - STORAGE

Motors should be lifted by their eyebolts and never by the shaft. Raising and lowering must be steady and jolttless, otherwise bearings may be damaged.
When motors are not immediately installed, they should be stored in their normal upright position in a dry even temperature place, free of dust, gases and corrosive smoke. Other objects should not be placed on or against them.
Motors stored over long periods are subject to loss of insulation resistance and oxidation of bearings.

Bearings and the lubricant deserve special attention during long periods of storage. Depending on the length and conditions of storage it may be necessary to regrease or change rusted bearings. The weight of the rotor in an inactive motor tends to expel grease from the bearing surfaces thereby removing the protective film that impedes metal-to-metal contact. As a preventive measure against the formation of corrosion by contact, motors should not be stored near machines which cause vibrations, and their shaft should be rotated manually at least once a month.

Recommendations for Storage of Bearings:

- Ambient must be dry with relative humidity not exceeding 60%.
- Clean room with temperature ranging from 10ºC to 30ºC.
- Maximum stacking of 5 boxes.
- Far from chemical products and tubes conducting steams, water and compressed air.
- They should not be stacked over stone floors or against walls.
- Stock should follow the first-in-first-out principle.
- Double shielded bearings should not remain in stock for more than 2 years.

Storage of motors:
- Mounted motors which are kept in stock must have their shaft turned periodically, at least once a month, in order to renew the grease on the bearing races.

It is difficult to prescribe rules for the actual insulation resistance value of a machine as the resistance varies according to the type, size and rated voltage and the state of the insulation material used, method of construction and the machine's insulation antecedents. A lot of experience is necessary to decide when a machine is ready or not to be put into service. Periodical records are useful to take such decision.

The following guidelines show the approximate values that can be expected of a clean and dry machine when, at 40ºC, test voltage is applied over a period of one minute.

Insulation resistance Rm is obtained by the formula:

$$Rm = Un + 1$$

where: Rm - minimum recommended insulation resistance in MΩ with winding at 40ºC.
Un - machine rated voltage in kV.

In case that the test is carried out at a temperature other that 40ºC, the reading must be corrected to 40ºC using a curve of insulation resistance vs. temperature for the particular machine. If such curve is not available, an approximation is possible with the aid of Figure 2.1; it is possible to verify that resistance practically doubles every 10ºC that insulating temperature is lowered.

On new machines, lower values are often attained due to solvents present in the insulating varnishes that later evaporate during normal operation. This does not necessarily mean that the machine is not operational, since insulating resistance will increase after a period of service.

On motors which have been in service for a period of time, much larger values are often attained. A comparison of the values recorded in previous tests on the same machine, under similar load, temperature and humidity conditions, serves as a better indication of insulation condition than that of the value coming from a single test. Any substantial or sudden reduction is suspect.

Insulation resistance is usually measured with a MEGGER. In the event that insulation resistance be inferior to the values coming from the above formula, motors should be submitted to a drying process.

This drying process should be carried out in a stove, where the rate of temperature rise should not exceed 5ºC per hour and the temperature should not exceed 110ºC.

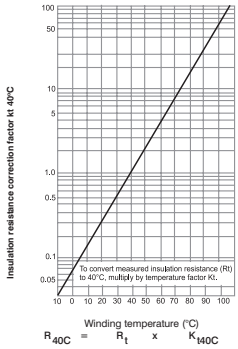

Fig. 2.1 Approximate calculation curve of the insulation resistance.

3 - INSTALLATION

Electric machines should be installed in such a way to allow easy access for inspection and maintenance. Should the surrounding atmosphere be humid, corrosive or containing flammable substance or particles, it is essential to ensure an adequate degree of protection.
The installation of motors on ambients where there are steams, gases or dusts, flammable or combustible materials, subject to fire or explosion, should be undertaken according to appropriate and governing codes, such as ABNT/IEC 7914, NBR 5418, VDE 0165, NEC-ART. 500, UL-674.
Under no circumstances motors can be enclosed in boxes or covered with materials which may impede or reduce the free circulation of cooling air.
Machines fitted with external ventilation should be at least 50cm far from the wall to permit air movement.
The place of installation should allow for air renewal at a rate of 20 cubic meter per minute for each 100kW of motor output considering ambient temperature of 40ºC and altitude of 1000 m.a.s.l.

3.1 - MECHANICAL ASPECTS

3.1.1 - FOUNDATION

The motor base must be level and as far as possible free of vibrations.
A concrete foundation is recommended for motors over 100 HP (75kW).
The choice of base will depend upon the nature of the soil at the place of installation or of the floor capacity in the case of buildings.
When designing the motor base, keep in mind that the motor may ocasionally be run at a torque above that of the rated full load torque.
Based upon Figure 3.1, foundation stresses can be calculated by using the following formula:

$$F1 = 0.5.g.G - \frac{4\,Tmax}{A} \qquad F2 = 0.5.g.G + \frac{4\,Tmax}{A}$$

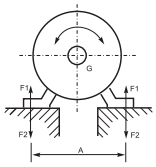

Fig. 3.1 - Base Stresses

Where:
F1 and F2 - Lateral Stress (N)
g - Gravity Force (9.8m/s²)
G - Motor Weight (kg)
Tmax - Breakdown torque (Nm)
A - Obtained from the dimensional drawing of the motor(m)

Sunken bolts or metallic base plates should be used to secure the motor to the base.

3.1.2 - TYPES OF BASES

a) Slide Rails

When motor drive is by pulleys the motor should be mounted on slide rails and the lower part of the belt should be pulling to avoid belt sleppage during operation and also to avoid the belts to operate sidewise causing damage to bearing shoulders.
The rail nearest the drive pulley is positioned in such a way that the adjusting bolt be between the motor and the driven machine. The other rail should be placed with the bolt in the opposite position, as shown in Fig. 3.2.

The motor is bolted to the rails and set on the base. Drive and driven pulley centers must be correctly aligned on the same way, motor and driven machine shafts must be parallel.

The belt should not be overly stretched, see Fig. 3.10.
After the alignment, the rails are fixed, as shown below:

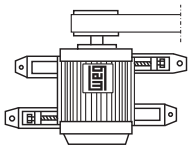

Fig. 3.2 - Positioning of slide rails for motor alignment.

b) Foundation Studs

Very often, particularly when drive is by flexible coupling, motor is anchored directly to the base with foundation studs.
This type of coupling does not allow any thrust over the bearings and it is of low cost.
Foundation studs should neither be painted nor rusted as both interfere with the adherence of the concrete, and bring about loosening.

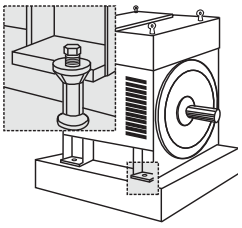

Fig. 3.3 - Motor mounted on a concrete base with foundation studs.

c) Metallic Base

Motor-generator sets are assembled and tested at the factory prior to delivery. However, before putting into service at site, coupling alignment should be carefully checked as the metallic base could have suffered displacement during transit due to internal stresses of the material.
The metallic base is susceptible to distortion if secured to a foundation that is not completely flat.
Machines should not be removed from their common metallic base for alignment; the metallic base should be level on the actual foundation with the aid of a spirit level (or similar instrument).
When a metallic base is used to adjust the height of the motor shaft end with the machine shaft end, the latter should be level on the concrete base.
After the base has been levelled, foundation, studs tightened, and the coupling checked, the metal base and the studs are cemented.

3.1.3- ALIGNMENT

The electric motor should be accurately aligned with the driven machine, particularly in cases of direct coupling. An incorrect alignment can cause bearing failure, vibrations and even shaft rupture.
The best way to ensure correct alignment is to use dial gauges

placed on each coupling half, one reading radially and the other axially.
Thus, simultaneous readings are possible and allow checking for any parallel (Fig. 3.4) and concentricity deviations (Fig. 3.5) by rotating the shafts one turn.
Gauge readings should not exceed 0.05 mm.

Fig. 3.4 - Deviation from parallelism

Fig. 3.5 - Deviation from concentricity

3.1.4- COUPLING

a) Direct Coupling

Direct coupling is always preferable due to low cost, space economy, no belt slippage and lower accident risk.
In cases of speed ratio drives, it is also common to use a direct coupling with a reducer (gear box).
CAUTION: Carefully align the shaft ends using, whenever feasible, a flexible coupling, leaving a minimum tolerance of 3 mm between the couplings (GAP).

b) Gear Coupling

Poorly aligned gear couplings are the cause of jerking motions which cause vibrations on the actual drive and on the motor.
Therefore, due care must be taken for perfect shaft alignment: exactly parallel in the case of straight gears and at the correct angle for bevel or helical gears.
Perfect gear engagement can be checked by the insertion of a strip of paper on which the teeth marks will be traced after a single rotation.

c) Belt and Pulley Coupling

Belt coupling is most commonly used when a speed ratio is required.
Assembly of Pulleys: To assemble pulleys on shaft ends with a keyway and threaded end holes the pulley should be inserted halfway up the keyway merely by manual pressure.
On shafts without threaded end holes, the heating of the pulley to about 80ºC is recommended, or alternatively, the devices illustrated in Figure 3.6 may be employed.

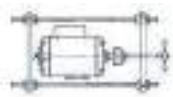

Fig. 3.6 - Pulley mounting device

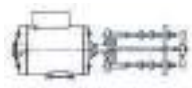

Fig. 3.7 - Pulley extractor

Hammers should be avoided during the fitting of pulleys and bearings. The fitting of bearings with the aid of hammers leaves blemishes on the bearing races. These initially small flaws increase with usage and can develop to a stage that completely impairs the bearing.
The correct positioning of a pulley is shown in Figure 3.8.

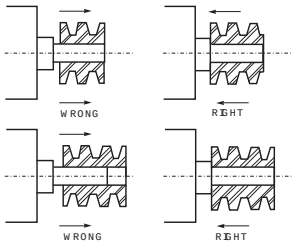

Fig. 3.8 - Correct positioning of pulley on the shaft.

RUNNING: To avoid needless radial stresses on the bearings it is imperative that shafts are parallel and the pulleys perfectly aligned. (Figure 3.9).

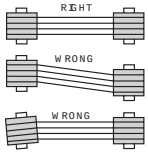

Fig. 3.9 - Correct pulley alignment

Pulleys that are too small should be avoided; these cause shaft flexion because belt traction increases in proportion to a decrease in the pulley size. Table 1 determines minimum pulley diameters, and Table 2 and 3 refer to the maximum stresses acceptable on motor bearings up to frame 355.

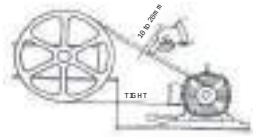

Fig. 3.10 - Belt tensions

Laterally misaligned pulleys, when running, transmit alternating knocks to the rotor and can damage the bearing housing. Belt slippage can be avoided by applying a resin (rosin for example).
Belt tension should be sufficient to avoid slippage during operation.

TABLE 1

MINIMUM PITCH DIAMETER OF PULLEYS							
Frame	BALL BEARINGS						
	Bearing	Size X (mm)					
		20	40	60	80	100	120
63	6201-ZZ	40	---	---	---	---	---
71	6203-ZZ	40	40	---	---	---	---
80	6204-ZZ	40	40	---	---	---	---
90	6205-ZZ	63	71	80	---	---	---
100	6206-ZZ	71	80	90	---	---	---
112	6307-ZZ	71	80	90	---	---	---
132	6308-ZZ	---	100	112	125	---	---
160	6309-Z-C3	---	140	160	180	200	---
180	6311-Z-C3	---	---	160	180	200	224
200	6312-Z-C3	---	---	200	224	250	280

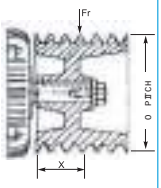

TABLE 1.1

Frame	Poles	BALL BEARINGS				
		Bearing	Size X (mm)			
			50	80	110	140
225	IV-VI-VIII	6314	250	265	280	300
250	IV-VI-VIII	6314	375	400	425	450
280	IV-VI-VIII	6316	500	530	560	600
315	IV-VI-VIII	6319	-----	-----	-----	-----
355	IV-VI-VIII	6322	-----	-----	-----	-----

For II pole motors, contact WEG.

TABLE 1.2

Frame	Poles	Roller Bearings						
		Bearing	Size x (mm)					
			50	80	100	140	170	210
225	IV-VI-VIII	NU 314	77	80	110	136	-----	-----
250	IV-VI-VIII	NU 314	105	115	145	175	-----	-----
280	IV-VI-VIII	NU 316	135	140	170	210	-----	-----
315	IV-VI-VIII	NU 319	-----	170	185	225	285	-----
355	IV-VI-VIII	NU 322	-----	-----	345	410	455	565

TABLE 2

MAXIMUM ACCEPTABLE RADIAL LOAD (N) - IP55 MOTORS - 60Hz				
FRAME	POLES			
	II	IV	VI	VIII
63	245	294	-----	-----
71	294	392	-----	----
80	343	491	-----	-----
90	392	540	589	687
100	589	785	883	981
112	1040	1275	1472	1668
132	1275	1570	1864	1962
160	1570	1962	2256	2551
180	2060	2649	3041	3434
200	2354	3139	3630	4120
225	3041	4120	4415	5003
250	2845	3728	4316	4807
280	3532	4513	5101	5690
315	3335	4905	5690	6475
355	----	15402	15402	15402

MAXIMUM ACCEPTABLE RADIAL LOAD (N) - IP55 MOTORS - 50Hz				
FRAME	POLES			
	II	IV	VI	VIII
63	245	294	-----	-----
71	294	392	-----	----
80	343	491	-----	-----
90	392	589	638	687
100	589	834	932	1079
112	1079	1373	1570	1766
132	1373	1668	1962	2060
160	1668	2060	2403	2698
180	2158	2796	3237	3630
200	2502	3335	3826	4365
225	3237	4365	4709	5297
250	3041	3924	4611	5101
280	3728	4807	5396	5984
315	3532	5199	5984	6867
355	----	16285	16285	16285

TABLE 2.1

MAXIMUM ACCEPTABLE RADIAL LOAD (Kgf) - 60Hz AND 50Hz				
NEMA 56 MOTORS (SINGLE-PHASE)				
FRAME	RADIAL FORCE (N)			
	POLES			
	II	IV	VI	VIII
56 A	245	343	-----	-----
56 B	294	343	-----	-----
56 D	343	441	-----	-----
SAW ARBOR MOTORS (THREE-PHASE)				
80 S - MS	981	-----	-----	-----
80 H - MS	981	-----	-----	-----
80 L - MS	981	-----	-----	-----
90 L - MS	1275	1570	-----	-----

Concerning ODP NEMA 48 & 56 fractional motors, these have the following features:

- Rotor: Squirrel cage
- Protection: Open drip proof
- Insulation: Class "B" (130ºC) - IEC 34
- Cooling system: internal
- Bearings: Ball
- Standards: NEMA MG-1
- Voltage: Single phase: 110/220V
  Three phase: 220/380V
- Frequency: 60Hz and 50Hz

For more information referring to motor features, please contact WEG.

TABLE 3

MAXIMUM ACCEPTABLE AXIAL LOAD (N) - f = 60 Hz																
TOTALLY ENCLOSED FAN COOLED MOTORS - IP55																
FRAME	POSITION / MOUNTING CONFIGURATION															
					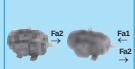											
	II	IV	VI	VIII	II	IV	VI	VIII	II	IV	VI	VIII	II	IV	VI	VIII
63	275	363	422	-	275	363	422	-	265	343	412	-	265	343	412	-
71	294	402	471	530	363	491	579	647	284	383	451	520	353	481	559	638
80	353	481	559	638	471	647	755	844	334	451	530	608	461	618	726	824
90	451	618	746	834	491	667	824	922	422	569	706	785	461	628	775	873
100	481	657	795	903	687	932	1128	1275	432	589	726	834	638	873	1069	1207
112	677	912	1109	1275	1197	1628	1972	2227	608	824	1020	1187	1138	1540	1874	2139
132	834	1158	1383	1570	1422	1982	2364	2659	706	1010	1207	1364	1305	1825	2178	2453
160	1197	1648	1884	2168	2040	2747	3178	3620	952	1383	1560	1884	1795	2482	2855	3335
180	-	2178	2492	2815	-	3718	4307	4846	-	1825	1991	2315	-	3375	3806	4365
200	1668	2207	2659	3041	3129	4130	4895	5552	1197	1579	2040	2472	2659	3483	4277	4983
225	3983	5278	6200	6985	3983	5278	6200	6985	3335	4454	5297	6082	3335	4454	5297	6082
250	3895	5180	6053	6828	3895	5180	6053	6828	3129	4169	4876	5651	3129	4169	4876	5651
280	3747	5964	7073	7985	3747	5964	7073	7985	2541	4424	5307	6239	2541	4424	5307	6239
315	3424	5562	6622	7514	3424	5562	6622	7514	1579	3208	3924	4836	1579	3208	3924	4836
355	3120	6259	7338	8299	3120	6259	7338	8299	451	2109	2443	2659	451	2109	2443	2659

MAXIMUM ACCEPTABLE AXIAL LOAD (N) - f = 50 Hz																
TOTALLY ENCLOSED FAN COOLED MOTORS - IP55																
FRAME	POSITION / MOUNTING CONFIGURATION															
	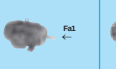				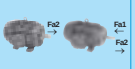								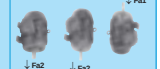			
	II	IV	VI	VIII	II	IV	VI	VIII	II	IV	VI	VIII	II	IV	VI	VIII
63	294	392	441	-	294	392	441	-	284	363	441	-	294	392	441	-
71	314	432	491	559	392	520	618	687	304	402	481	549	373	510	589	677
80	373	510	589	677	491	687	785	893	353	481	559	647	491	657	765	873
90	481	657	785	883	520	706	873	981	441	618	746	834	491	667	824	922
100	510	697	844	961	726	981	1197	1354	461	628	765	883	677	922	1128	1275
112	716	961	1177	1354	1275	1727	2090	2354	647	873	1079	1256	1207	1628	1982	2266
132	883	1226	1472	1668	1511	2080	2502	2815	765	1069	1275	1442	1383	1933	2305	2600
160	1275	1746	1991	2296	2158	2914	3375	3836	1010	1472	1658	1991	1903	2629	3021	3532
180	-	2305	2649	2982	-	3944	4562	5131	-	1933	2109	2453	-	3581	4032	4630
200	1766	2335	2815	3227	3316	4375	5189	5886	1275	1668	2158	2619	2815	3689	4532	5278
225	4218	5592	6573	7407	4218	5592	6573	7407	3532	4719	5611	6445	3532	4719	5611	6445
250	4120	5494	6416	7230	4120	5494	6416	7230	3316	4415	5160	5984	3316	4415	5160	5984
280	3973	6318	7505	8466	3973	6318	7505	8466	2688	4689	5621	6612	2688	4689	5621	6612
315	3630	5886	7014	7966	3630	5886	7014	7966	1668	3404	4159	5121	1668	3404	4159	5121
355	3306	6632	7779	8790	3306	6632	7779	8790	481	2237	2590	2815	481	2237	2590	2815

TABLE 3.1

MAXIMUM ACCEPTABLE AXIAL LOAD (N) - f = 60 Hz and 50Hz								
FRAME	POSITION / MOUNTING CONFIGURATION FRAME							
			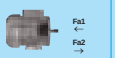		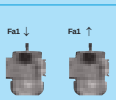		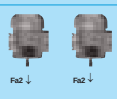	
	II	IV	II	IV	II	IV	II	IV
56 A	294	392	363	491	275	373	343	471
56 B	294	392	353	481	275	363	343	461
56 D	275	383	461	638	255	353	441	608

3.2 - ELECTRICAL ASPECTS

3.2.1- POWER SUPPLY SYSTEM

Proper electric power supply is very important. The choice of motor feed conductors, whether branch or distribution circuits, should be based on the rated current of the motors as per IEC 34 Standard.

NOTE: In the case of variable speed motors, the highest value among the rated currents should be considered. When motor operation is intermittent the conductors should have a current carrying capacity equal or greater, to the product of the motor rated current times the running cycle factor shown in Table 4.

IMPORTANT: For a correct choice of motor feed conductors, we recommend to check the standards requirements for industrial installations.

TABLE 4

Service Duty Factor				
Classification \ Motor Rated Service Time	5 min.	15 min.	30 to 60 min.	Continuous
Short (valve operation, contact operation, etc.)	1.10	1.20	1.50	-
Intermittent (load or building elevators, tools, pumps, rolling bridges, etc.)	0.85	0.85	0.90	1.40
Periodical (Rolling mill, mining machines, etc.)	0.85	0.90	0.95	1.40
Variable	1.10	1.20	1.50	2.00

3.2.2 - STARTING OF ELECTRIC MOTORS

Induction motors can be started by the following methods:

DIRECT STARTING

Whenever possible a three phase motor with a squirrel cage should be started directly at full voltage supply by means of contactors. It has to be taken into account that for a certain motor, torque and current curves are fixed, independently of the load, for constant voltage.

In cases where motor starting current is high, this can cause interference to the following:

a) Significant voltage drop in the power supply feeding system. As a consequence, other equipment connected to the same system can suffer interference.

b) The protection system (cables and contactors) must be overdesigned leading to a high cost.

c) Power supply utilities will limit the supply voltage drop.

In cases where DOL starting is not feasible due to above given reasons, then indirect system can be used in order to reduce the starting current such as:
- Star-delta starting
- Starting with compensating switch (auto-transformer starting)
- Series-parallel starting
- Electronic starting (soft-start)

STAR-DELTA STARTING

It is fundamental for star-delta starting that three phase motor have the required number of leads to allow connection on both voltages, that is, 220/380V, 380/660V or 440/760V.
These motors should have at least 6 connecting leads. The starting has to be made at no load. The star-delta starting can be used when the motor torque curve is sufficiently high to guarantee acceleration of the load at reduced voltage. At star connection, current is reduced to 25% to 30% of the starting current in comparison to delta connection.
Torque curve is also reduced proportionally. For this reason, every time a star-delta starting is required, a high torque curve motor must be used.
WEG motors have high starting and breakdown torque. Hence, they are suitable in most cases for star-delta starting.
The load resistant torque can not exceed the motor starting torque, neither the current when switching to delta connection can not be of an unacceptable value.
There are cases where this starting method can not be used. For example, when the resistant torque is too high. If the starting is made at star, motor will accelerate the load up to approximately 85% of the rated speed. In this point, the switch must be connected at delta. In this case, the current which is about the rated current jumps, suddenly, which is in fact not advantageous, as the purpose is to reduce the starting current.
Table 5 shows the most common multiple rated voltages for three phase motors and their use to the usual power supply voltages.
The DOL or compensating switch starting is applicable to all cases of table 5.

TABLE 5

Normal connections for three phase motors		
Winding design	Operation Voltage	Star-delta starting
220V/380V	220 V 380 V	yes no
220/440/230/460	220V/230V 440V/760V	no yes
380V/660V	380V	yes
220/380/440/760	220V 380V 440V	yes no yes

STARTING WITH COMPENSATING SWITCH (AUTO-TRANSFORMER)

This starting method can be used to start motors hooked to the load. It reduces the starting current avoiding in this way overload giving the motor enough torque for the starting and acceleration. The voltage in the compensating switch is reduced through an auto-transformer which normally has TAPS of 50, 65 and 80% of the rated voltage.

SERIES - PARALLEL STARTING

For series-parallel starting, motor must allow reconnection for two voltages:
The lowest to be equal to the power supply voltage and the other twice higher.
This starting method requires 9 connecting leads in the motor, and the most common voltage is 220/440V, that is, during the starting, motor is series connected until it reaches the rated speed and then it is switched to parallel connection.

ELECTRONIC STARTING (SOFT START)

The advance of the electronics has allowed creation of the solid state starting switch which is composed of a set of pairs of tiristors (SCR) (or combination of tiristors/diodes), one on each motor output borne.
The trigger angle of each pair of tiristors is controlled electronically to apply a variable voltage to the motor terminals during the acceleration. At the final moment of the starting, typically adjusted between 2 and 30 seconds, voltage reaches its full load value after a smooth acceleration or an increasing ramp, instead of being submitted to increasing or sudden jumps.
Due to that it is possible to keep the starting current (in the power supply) close to the rated current and with slight variation.
Besides the advantage of controlling the voltage (current) during the starting, the electronic switch has also the advantage of not having moving parts or those that generate arc, as it happens with mechanical switches. This is a strong point of the electronic switches as their useful life is extended.

3.2.3 - MOTOR PROTECTION

Motors in continuous use should be protected from overloads by means of a device incorporated into the motor, or by an independent device, usually a fixed or adjustable thermal relay equal or less than to the value originated from the multiplication of the rated feed current at full load by:
- 1.25 for motors with a service factor equal or superior to 1.15; or
- 1.15 for motors with service factor equal to 1.0 (IEC 34)

Some motors are optionally fitted with overheating protective devices such as thermoresistances, thermistors, thermostats or thermal protectors.
The type of temperature detector to be used are selected taking into consideration the motor insulation temperature, type of motor and customer requirement.

THERMOSTAT (THERMAL PROBE)

They are bimetallic thermal detectors with normally closed silver contacts. They open as the temperature increases and then return to the original position as soon as the temperature acting on the bimetallic decreases, allowing new closing of the contacts.
Thermostats can be used for alarm, tripping systems or both (alarm and tripping) of three phase electric motors when requested by the customer. Thermostats are series connected directly to the contactor coil circuit.
Depending on the safety level and customer requirement, three thermostats (one per phase) or six thermostats (two per phase) can be installed. In order to operate as alarm and tripping (two thermostats per phase), the alarm thermostats must be suitable to act at the motor predetermined temperature, while the tripping thermostats must act at the maximum temperature of the insulating material.
Thermostats are also used on special applications of single phase motors. On these applications, the thermostat can be series connected with the motor power supply as long as the motor current does not exceed the maximum acceptable current of the thermostat.
If this occurs, connect the thermostat in series with the contactor coil.
Thermostats are installed in the coil heads of different phases.

THERMISTORS (PTC and NTC)

These are semi-conductor heat detectors which sharply change their resistance upon reading a set temperature.
PTC - Positive temperature coeficient.
NTC - Negative temperature coeficient.
The PTC type is a thermistor whose resistance increases sharply to a temperature defined value specified for each type. This sudden variation of the resistance interrupts the current in the PTC by acting an outlet relay which switches off the main circuit. It can also be used for alarm and tripping systems (two per phase).
NTC thermistors, which act adversily of PTC's, are not normally used on WEG motors as the control electronic circuits available commonly apply to PTC's.
Thermistors have reduced size, do not suffer mechanical wear and act quicker in relation to other temperature detectors.
Fitted with control electronic circuits, thermistors give complete protection for overheating, overload, sub or overvoltages or frequent reversing or on - off operations.
It is a low cost device, similar to a PT-100, but it requires a commanding relay for alarm or operation.

RESISTANCE TEMPERATURE DETECTORS (RTD) PT-100

The RTD operates on the principle that the electrical resistance of a metallic conductor varies linearly with the temperature. It is an element usually made of copper, platinum or nickel which allows a continuous follow up of the motor heating process through a control panel of high precision and acting sensibility. Highly used in the industry in general where temperature measuring and automation techniques are required. Also widely used on applications that require irregular intermittent duty.
A single detector can be used for alarm and tripping purposes.

THERMAL PROTECTORS

These are bimetallic thermal detectors with normally closed silver contacts. Mainly used as protection of single phase motors against overheating caused by overloads, locked rotor, voltage drop, etc. They are normally fitted in the motors when requested by the customer. The basic components are a bimetallic disc, two flexible contacts, a resistance and a pair of fixed contacts.
It is series connected with the supply voltage and, due to a thermal dissipation caused by the current pass through its internal resistance, the disc is deformed enough to open the contacts, and then motor feeding is interrupted. As soon as the temperature comes down, the protector should react.
Based on the resetting, there are two types of thermal protectors:

a) Automatic overload protector where the resetting is done automatically.

b) Manual overload protector when the resetting is done through a manual release.

Table 6 shows a comparison between motor protection systems.

TABLE 6

COMPARISON BETWEEN MOTOR PROTECTION SYSTEMS			
Causes of overheating	Current-based protection		Protection with probe thermistor in motor
	Fuse only	Fuse and thermal protector	
Overload with 1.2 times rated current	○	●	●
Duty cycles S1 to S10	○	◑	●
Brakings, reversals and frequent starts	○	◑	●
Operation with more than 15 starts p/hour	○	◑	●
Locked rotor	◑	◑	●
Fault on one phase	○	◑	●
Excessive voltage fluctuation	○	●	●
Frequency fluctuation on main supply	○	●	●
Excessive ambient temperature	○	●	●
External heating caused by bearings, belts, pulleys, etc.	○	○	●
Obstructed ventilation	○	○	●

CAPTION ○ *Unprotected*
◑ *Partially protected*
● *Totally protected*

3.3 - START-UP

3.3.1 - PRELIMINARY INSPECTION

Before starting a motor for the first time, check the following:

a) Remove all locking devices and blocks used in transit and chek that the motor rotates freely;
b) Check if the motor is firmly secured and that coupling elements are correctly mounted and aligned;
c) Ascertain that voltage and frequency correspond to those indicated on the nameplate. Motor performance will be satisfactory as long as voltage and frequency remain in the range determined by IEC Standard.
d) Check if connections are in accordance with the connection diagram shown on the nameplate and be sure that all terminal screws and nuts are tight;
e) Check the motor for proper grounding. Providing that there are no specifications calling for ground-insulated installation, the motor must be grounded in accordance with prevalent standard for grounding electrical machines. The screw identified by the symbol (⏚) should be used for this purpose. This screw is generally to be found in the terminal box or on the motor foot.
f) Check if motor leads correspond with the main supply as well as the control wires, and the overload protection device are in accordance with IEC Standards;
g) If the motor has been stored in a humid place, or has been stopped for some time, measure the insulating resistance as recommended under the item covering storage instructions;
h) Start the motor uncoupled to ascertain that it is running freely and in the desired direction.
To reverse the rotation of a three-phase motor, invert two terminal leads of the main power supply.
Medium voltage motors having an arrow on the frame indicating rotation direction can only turn in the direction shown;

3.3.2 - THE FIRST START-UP

THREE-PHASE MOTOR WITH SQUIRREL CAGE ROTOR

After careful checking of the motor, follow the normal sequence of starting operations listed in the control instructions for the initial start-up.

BEARING SPECIFICATION BY MOTOR TYPE

TABLE 7

FRAMES	Mounting Config.	BEARINGS	
		DE	ODE
TEFC motors			
63	all mounting configurations	6201-ZZ	6201-ZZ
71		6203-ZZ	6202-ZZ
80		6204-ZZ	6203-ZZ
90 S		6205-ZZ	6204-ZZ
90 L		6205-ZZ	6204-ZZ
100 L		6206-ZZ	6205-ZZ
112 M		6307-ZZ	6206-ZZ
132 S		6308-ZZ	6207-ZZ
132 M		6308-ZZ	6207-ZZ
160 M		6309-Z-C3	6209-Z-C3
160 L		6309-Z-C3	6209-Z-C3
180 M		6311-Z-C3	6211-Z-C3
180 L		6311-Z-C3	6211-Z-C3
200 L		6312-Z-C3	6212-Z-C3
200 M		6312-Z-C3	6212-Z-C3
225 S/M		6314-C3	6314-C3
250 S/M		6314-C3	6314-C3
280 S/M		6314-C3**	6314-C3
		6316-C3	6316-C3
315 S/M		6314-C3**	6314-C3
		6319-C3	6316-C3
355 M/L		6314-C3	6314-C3
		NU322-C3	6319-C3

*** Only valid for 2 pole motors.*

3.3.3 - OPERATION

Drive the motor coupled to the load for a period of at least one hour while watching for abnormal noises or signs of overheating.
Compare the line current with the value shown on the nameplate.
Under continuous running conditions without load fluctuations, this should not exceed the rated current times the service factor, also shown on the nameplate.
All measuring and control instruments and apparatus should be continuously checked for any deviation and any irregularities corrected.

3.3.4 - STOPPING

Warning:

To touch any moving part of a running motor, even though disconnected, is a danger to life and limb.

Three-phase motor with squirrel cage rotor:
Open the stator circuits switch. With the motor at a complete stop, reset the auto-transformer, if any, to the "start" position.

BEARING SPECIFICATION BY MOTOR TYPE

TABLE 8

FRAMES	Mounting Config.	BEARINGS	
		DE	ODE
TEFC motors			
143 T	all mounting configurations	6205-ZZ	6204-ZZ
145 T		6205-ZZ	6204-ZZ
182 T		6307-ZZ	6206-ZZ
184 T		6307-ZZ	6206-ZZ
213 T		6308-ZZ	6207-ZZ
215 T		6308-ZZ	6207-ZZ
254 T		6309-C3	6209-C3
256 T		6309-C3	6209-C3
284 T / TS		6311-C3	6211-C3
286 T / TS		6311-C3	6211-C3
324 T / TS		6312-C3	6212-C3
326 T / TS		6312-C3	6212-C3
364 T / TS		6314-C3	6314-C3
365 T / TS		6314-C3	6314-C3
404 T		6314-C3	6314-C3
405 TS		6314-C3	6314-C3
444 T		6316-C3	6316-C3
444 TS		6314-C3**	6314-C3
445 T		6316-C3	6316-C3
445 TS		6314-C3**	6314-C3
504 Z		6319-C3	6316-C3
505 U		6314-C3**	6314-C3
505 Z		6319-C3	6316-C3
586 T		6314-C3	6314-C3
587 T		NU 322-C3	6319-C3

*** Only valid for 2 pole motors.*

BEARING SPECIFICATION BY MOTOR TYPE

BEARINGS FOR SAW ARBOR MOTORS

TABLE 8A

SAW ARBOR	Mounting Config.	BEARINGS	
		DE	ODE
80 S MS	B 3	6307-ZZ	6207-ZZ
80 M MS		6307-ZZ	6207-ZZ
80 L MS		6307-ZZ	6207-ZZ
90 L MS		6308-ZZ	6208-ZZ

NEMA FRAME MOTORS

TABLE 8B

NEMA Frames	Mounting Config.	BEARINGS	
		DE	ODE
ODP motors			
48B	all mounting configurations	6203-ZZ	6202-ZZ
56 A		6203-ZZ	6202-ZZ
56 B		6203-ZZ	6202-ZZ
56 D		6204-ZZ	6202-ZZ
56 H		6204-ZZ	6202-ZZ

BEARING LUBRICATION INTERVALS AND AMOUNT OF GREASE

TABLE 9

BALL BEARINGS - SERIES 62/63													
Relubrication intervals (running hours - horizontal position)													
	II pole		IV pole		VI pole		VIII pole		X pole		XII pole		Amount of grease
Serie 62													
Bearing	60Hz	50Hz	60Hz	50Hz	60Hz	50Hz	60Hz	50Hz	60Hz	50Hz	60Hz	50Hz	(g)
6209	18400	20000	20000	20000	20000	20000	20000	20000	20000	20000	20000	20000	9
6211	14200	16500	20000	20000	20000	20000	20000	20000	20000	20000	20000	20000	11
6212	12100	14400	20000	20000	20000	20000	20000	20000	20000	20000	20000	20000	13
Serie 63													
Bearing	60Hz	50Hz	60Hz	50Hz	60Hz	50Hz	60Hz	50Hz	60Hz	50Hz	60Hz	50Hz	(g)
6309	15700	18100	20000	20000	20000	20000	20000	20000	20000	20000	20000	20000	13
6311	11500	13700	20000	20000	20000	20000	20000	20000	20000	20000	20000	20000	18
6312	9800	11900	20000	20000	20000	20000	20000	20000	20000	20000	20000	20000	21
6314	3600	4500	9700	11600	14200	16400	17300	19700	19700	20000	20000	20000	27
6316	-	-	8500	10400	12800	14900	15900	18700	18700	20000	20000	20000	34
6319	-	-	7000	9000	11000	13000	14000	17400	17400	18600	18600	20000	45
6322	-	-	5100	7200	9200	10800	11800	15100	15100	15500	15500	19300	60

TABLE 10

ROLLER BEARINGS - SERIES NU 3													
Relubrication intervals (running hours - horizontal position)													
	II pole		IV pole		VI pole		VIII pole		X pole		XII pole		Amount of grease
Bearing	60Hz	50Hz	60Hz	50Hz	60Hz	50Hz	60Hz	50Hz	60Hz	50Hz	60Hz	50Hz	(g)
NU 309	9800	13300	20000	20000	20000	20000	20000	20000	20000	20000	20000	20000	13
NU 311	6400	9200	19100	20000	20000	20000	20000	20000	20000	20000	20000	20000	18
NU 312	5100	7600	17200	20000	20000	20000	20000	20000	20000	20000	20000	20000	21
NU 314	1600	2500	7100	8900	11000	13100	15100	16900	16900	19300	19300	20000	27
NU 316	-	-	6000	7600	9500	11600	13800	15500	15500	17800	17800	20000	34
NU 319	-	-	4700	6000	7600	9800	12200	13700	13700	15700	15700	20000	45
NU 322	-	-	3300	4400	5900	7800	10700	11500	11500	13400	13400	17300	60
NU 324	-	-	2400	3500	5000	6600	10000	10200	10200	12100	12100	15000	72

Notes:
- The ZZ bearings from 6201 to 6307 do not require relubrication as its life time is about 20,000 hours.
- Tables 9 and 10 are intended for the lubrication period under bearing temperature of 70°C (for bearings up to 6312 and NU 312) and temperature of 85°C (for bearings 6314 and NU 314 and larger).
- For each 15°C of temperature rise, the relubrication period is reduced by half.
- The relubrication periods given above are for those cases applying Polyrex® EM grease.
- When motors are used on the vertical position, their relubrication interval is reduced by half if compared to horizontal position motors.

Compatibility of Polyrex® EM grease with other types of grease:

Containing polyurea thickener and mineral oil, the Polyrex® EM grease is compatible with other types of grease that contain:
- Lithium base or complex of lithium or polyurea and highly refined mineral oil.
- Inhibitor additive against corrosion, rust and anti-oxidant additive.

Notes:
- Although Polyrex® EM is compatible with types of grease given above, we do no recommended to mix it with any other greases.
- If you intend to use a type of grease different than those recommended above , first contact WEG.
- On applications (with high or low temperatures, speed variation, etc), the type of grease and relubrification interval are given on an dditional nameplate attached to the motor.

4 - MAINTENANCE

A well-designed maintenance program for electric motors, when correctly used, can be summed up as: periodical inspection of insulation levels, temperature rise, wear, bearing lubrication at the occasional checking of fan air flow.
Inspection cycles depend upon the type of motor and the conditions under which it operates.

4.1 - CLEANLINESS

Motors should be kept clean, free of dust, debris and oil. Soft brushes or clean cotton rags should be used for cleaning. A jet of compressed air should be used to remove non-abrasive dust from the fan cover and any accumulated grime from the fan and cooling fins.
Terminal boxes fitted to motors with IP-55 protection should be cleaned; their terminals should be free of oxidation, in perfect mechanical condition, and all unused space dust-free.
Motors with IP(W) 55 protection are recommended for use under unfavourable ambient conditions.

4.2 - LUBRICATION

Motors made up to frame 160 are not fitted with grease fitting, while larger frames up to frame 200 this device is optional.
For frame 225 to 355 grease fitting is supplied as standard.
Proper Lubrication extends bearing life.
Lubrication Maintenance Includes:

a) Attention to the overall state of the bearings;
b) Cleaning and lubrication;
c) Careful inspection of the bearings.

Bearing temperature control is also part of routine maintenance. The temperature of bearings lubricated with suitable grease as recommended under item 4.2.2 should not exceed 70°C.
Constant temperature control is possible with the aid of external thermometers or by embedded thermal elements. WEG motors are normally equipped with grease lubricated ball or roller bearings.
Bearings should be lubricated to avoid the metallic contact of the moving parts, and also for protection against corrosion and wear.
Lubricant properties deteriorate in the course of time and mechanical operation and, furthermore, all lubricants are subject to contamination under working conditions.
For this reason, lubricants must be renewed and any lubricant consumed needs replacing from time to time.

4.2.1 - LUBRICATION INTERVALS

To apply correct amount of grease is an important aspect for a good lubrication.
Relubrication must be made based on the relubrication intervals Table. However, when a motor is fitted with a lubrication instructions plate, these instructions must be followed.
For an efficient initial bearing lubrication, the motor manual or the Lubrication Table must be followed. If this information is not available, the bearing must be greased up to its half (only the empty space between the moving parts).
When performing these tasks, care and cleanliness are recommended in order to avoid penetration of dust into the bearings.

4.2.2 - QUALITY AND QUANTITY OF GREASE

Correct lubrication is important!
Grease must be applied correctly and in sufficient quantity as both insufficient or excessive greasing are harmful.
Excessive greasing causes overheating brought about by the greater resistance caused on the rotating parts and, in particular, by the compacting of the lubricant and its eventual loss of lubricating qualities.
This can cause seepage with the grease penetrating the motor and dripping on the coils or other motor components.
A lithium based grease is commonly used for the lubrication of electric motor bearings as it has good mechanical stability, insoluble in water.

Greases for standard motors

Type	Supplier	Frame
Polyrex©EM	Esso	63 to 355M/L

This grease should never be mixed with different base greases.
More details about the greases mentioned above can be obtained at an authorized service agent or you can contact WEG directly.
For special greases, please contact WEG.

4.2.3. LUBRICATION INSTRUCTIONS

- Inject about half the estimated amount of grease and run the motor at full speed for approximately a minute; switch off the motor and inject the remaining grease.
The injection of all the grease with the motor at rest could cause penetration of a portion of the lubricant through the internal seal of the bearing case and hence into the motor.
Nipples must be clean prior to introduction of grease to avoid entry of any alien bodies into the bearing.
For lubricating, use only a manual grease gun.

BEARING LUBRICATION STEPS

1. Clean the area around the grease nipples with clean cotton fabric.
2. With the motor running, add grease with a manual grease gun until the quantity of grease recommended in Tables 9 or 10 has been applied.
3. Allow the motor to run long enough to eject all excess of grease.

4.2.4 - REPLACEMENT OF BEARINGS

The opening of a motor to replace a bearing should only be carried out by qualified personnel.
Damage to the core after the removal of the bearing cover is avoided by filling the gap between the rotor and the stator with stiff paper of a proper thickness.
Providing suitable tooling is employed, disassembly of a bearing is not difficult (Bearing Extractor).
The extractor grips should be applied to the sidewall of the inner ring to the stripped, or to an adjacent part.

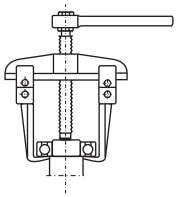

Fig. 4.2 - Bearing Extractor

To ensure perfect functioning and no injury to the bearing parts, it is essential that the assembly be undertaken under conditions of

complete cleanliness and by competent personnel.
New bearings should not be removed from their packages until the moment of assembly.
Prior to fitting a new bearing, ascertain that the shaft has no rough edges or signs of hammering.
During assembly bearings cannot be subjected to direct blows. The aid used to press or strike the bearing should be applied to the inner ring.
Protect all machined parts against oxidation by applying a coating of vaseline or oil immediately after cleaning.

STRIPPING OF WINDINGS - This step requires great care to avoid knocking and/or denting of enclosure joints and, when removing the sealing compound from the terminal box, damage or cracking of the frame.

IMPREGNATION - Protect all frame threads by using appropriate bolts, and terminal box support fitting with a non-adhesive varnish (ISO 287 - ISOLASIL).
Protective varnish on machined parts should be removed soon after treating with impregnation varnish. This operation should be carried out manually without using tools.

ASSEMBLY - Inspect all parts for defects, such as cracks, joint incrustations, damaged threads and other potential problems.
Assemble using a rubber headed mallet and a bronze bushing after ascertaining that all parts are perfect by fitted.
Bolts should be positioned with corresponding spring washers and evenly tightened.

TESTING - Rotate the shaft by hand while examining for any drag problems on covers or fastening rings.

MOUNTING THE TERMINAL BOX - Prior to fitting the terminal box all cable outled on the frame should be sealed with a self estinguishible sponge compound (1st layer) and on Explosion Proof Motors an Epoxy resin (ISO 340) mixed with ground quartz (2nd layer).

Drying time for this mixture is two hours during which the frame should not be handled and cable outlets should be upwards.
When dry, see that the outlets and areas around the cables are perfectly sealed.
Mount the terminal box and paint the motor.

4.3- MISCELLANEOUS RECOMMENDATIONS

- Any damaged parts (cracks, pittings in machined surfaces, defective threads) must be replaced and under no circumstances should attempt be made to recover them.

- Upon reassembling explosion proof motors IP(W) 55, the replacement of all seals is mandatory.

SINGLE PHASE MOTORS

SINGLE PHASE ASYNCHRONOUS INDUCTION MOTORS:

ADVANTAGES:
WEG single phase motors, totally enclosed fan cooled (degree of protection IP55) are highly resistant to bad weather, any external contamination and action and penetration of rodents, and they offer more additional advantages in relation to standard motors.
The capacitors - start and run-supply superior power factor and high efficiency, offering significant energy saving.
The energy saving obtained by using this new single phase motors can be calculated comparing the efficiency and power factor curves in order to know the investment payback.
These motors are built with an efficient starting method. The centrifugal switch mounted on a ridig base is fitted with special steel helicoidal springs, resistant to fatigue, driven by counter-weights designed in such a way to ensure the closing and opening under minimum and maximum established speeds.

FRACTIONAL MOTORS

FRACTIONAL ODP NEMA 48 AND 56 MOTORS:

SINGLE PHASE: Built with high starting torque which are suitable for heavy loads.
They are supplied with starting capacitor.

APPLICATIONS: Compressors, pumps, industrial air conditioning equipment, general machines and tooling, other industrial and commercial components requiring high starting torque.

THREE PHASE: Designed with torque suitable to drive industrial machines as well as optimized breakdown torques to operate under instantaneous overload conditions.

APPLICATIONS: Compressors, pumps, fans, chippers and general use machines powered by three phase network and continuous duty.

THREE PHASE ODP FRACTIONAL MOTOR "JET PUMP"

This type of motor can be used where three phase power supply is applicable. It has high starting torque, and breakdown torque approximately 3 times the rated current.

FRACTIONAL ODP "JET PUMP" MOTOR - START CAPACITOR

It is a single phase motor designed with a main winding and a capacitor series connected with the auxiliary winding.
The centrifugal switch disconnects the auxiliary winding when motor reaches about 80% of the synchronous speed. Then the motor operates continuously with the main winding.
The start capacitor motors present high torques. The starting torque varies between 200 and 350% of the rated torque, and the breakdown torque between 200% and 300% of the rated torque.
Based on these features, this type of motor is recommended for heavy starting load and it is used for the range of output up to 3HP (2.2kW).

APPLICATIONS: Water pumping systems by jet pumps, commercial and industrial pumps, domestic use pumps, centrifugal pumps and hydraulic pumps.

FRACTIONAL ODP MOTOR "JET PUMP PLUS" - SPLIT PHASE

It is a single phase motor built with two windings: main and starting auxiliary. The centrifugal switch disconnects the auxiliary winding when the motor reaches about 70% of the synchronous speed. Then the motor operates continuously with the main winding.
The "Jet Pump Plus - Split Phase" has moderated torques. The starting torque varies between 150% and 200% of the rated torque, and the breakdown torque between 200% and 300% of the rated torque.
It is a type of motor recommended for applications that require few starts and low starting torque.

These are the mechanical characteristics for this line of motors:
- Squirrel cage rotor
- Ball bearings
- 1045 steel shaft or stainless steel (optional)
- Feet and thermal protector (optional)
- CCW rotation direction
- Voltages:single-phase: 110V, 220V or 110/220V
  split-phase: without capacitor
- Standard painting is Red Oxid Primer.
- Degree of Protection is IP21.

THREE PHASE MOTOR - PREMIUM HIGH EFFICIENCY

Standard Features:
- Frequency: 60Hz and 50Hz
- Voltages: 220/380V, 380/660V, 440/760V or 220/380/440V
- Service Factor: 1.0
- Class of insulation: "F"
- Degree of Protection: IP55
- Design N (IEC 85)
- Speeds: 60Hz: 3600, 1800, 1200 and 900 rpm
  50Hz: 3000,1500,1000 and 750 rpm
- Temperature rise: below 80ºC

Optional Features:
- Class of insulation: "H"
- Degree of Protection: IP(W)55
- Thermal protection: Thermostats or thermistors
- Space heaters
- Routine and type test (IEC 34-2), witnessed or not.

Optional Features on Request:
- Design: H
- Hazardous location motors
- Explosion proof motors
- Increased safety
- Marine duty motors

THREE PHASE BRAKE MOTORS - *Single Disc*

GENERAL DESCRIPTION:
The brake motor is composed of an induction motor coupled to a single disc brake forming an integral and compact unit.
The induction motor is a totally enclosed fan cooled motor with the same mechanical and electrical performance of the WEG standard motors.
The brake is built with few movable parts which gives long life with reduced maintenance. The two faces of the brake pads create a large contact area which reduces the pressure over them, reduces the heating and the wear is minimum.
Besides, the brake is cooled by the same motor cooling.
The electromagnet drive coil, protected with epoxy resin, operates continuously with voltages varying 10% above and below the rated voltage. It is DC powered, supplied by a bridge rectifier made of silicon diodes and varistors which avoid sudden voltage peaks and allow a quick current switching off.
The DC power supply gives the brake a quicker and uniform operation.

APPLICATIONS:
Brake motors are commonly used on: tooling-machines, sewing machines, packing machines, conveyors, bottle washing machines, winding machines, folding machines, hoists, rolling bridges, elevators, printing machines and others. In general terms, on equipment requiring quick stops based on safety, positioning and time saving factors.

BRAKE OPERATION:
When motor is switched off from power supply, the control also interrupts the coil current and then the electromagnet stops operating.
The pressure springs force the armature towards the motor non drive endshield. The braking pads, which are fitted in the braking disc, are compressed between the two friction surfaces, the armature and the endshield braking the motor until it stops.
The armature is pulled against the electromagnet frame by eliminating the spring resistance. Once they are free, the braking pads move axially in their fittings and they stay out of the friction area.
In this way, the braking is finished permitting the motor to start freely.
As an option, WEG can supply lining braking disc.

INSTALLATION:
Brake motors can be mounted in any position as long as it is not subject to penetration of water, oil, abrasive dust, etc through the air inlet.

When normally mounted, the brake motor complies with Degree of Protection IP54 of IEC.

CONNECTION DIAGRAM
The WEG Brakemotor allows 3 types of connection diagram supplying slow, medium and quick brakings.

a) Slow Braking
The feeding of the brake coil bridge rectifier is done directly from the motor terminals, without interruption, as shown below:

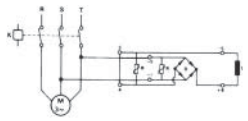

D - Bridge rectifier
R - Varistors
L - Electromagnet coil
K - Contactor

Fig. 1 - Connection diagram for slow braking

b) Medium Braking:
In this case a contact for interruption of the bridge rectifier feeding current in the AC circuit is fitted. It is essential that this be a NO auxiliar contact of the contactor itself or motor magnetic switch in order to allow switch on and off of brake and motor simultaneously.

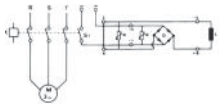

D- Bridge rectifier
R- Varistors
L- Electromagnet coil
K- Contactor
S1- NO auxiliary contact.

Fig 2 - Connection diagram for medium braking.

c) Quick Braking:
A contact for interruption is directly fitted in one of the coil feeding cables in the DC circuit.
It is essential that this is a NO auxiliary contact of the contactor itself or motor magnetic switch.

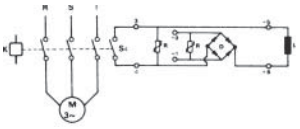

D - Bridge rectifier
R - Varistors
L - Electromagnet coil
K - Contactor
S1 - NO auxiliary contact

Fig. 3 - Connection Diagram for quick braking.

BRAKE COIL FEEDING:

The medium and quick braking allow two feeding alternatives:

a) Through motor terminals:
Motor 220/380V: Connect motor terminals 2 and 6 to terminals 1 and 2 of the bridge rectifier.
Motor 220/380/440/760V: connect motor terminals 1 and 4 to terminals 1 and 2 of the bridge rectifier.
Two speed motor 220V.
- High Speed: Connect motor terminals 4 and 6 to terminals 1 and 2 of the bridge rectifier.
- Low Speed: Connect motor terminals 1 and 2 to terminals 1 and 2 of the bridge rectifier.
- Motor 440V: Connect two of the motor terminals to terminals 1 and 2 of the bridge rectifier.

b) Independent Feeding:
For motor built for other voltages, connect the brake coil terminals to the independent 24ADC power supply. However, always with simultaneous interruption with motor feeding. With independent feeding it is possible to electrically release the brake, as shown in Fig. 4.
D - Bridge rectifier

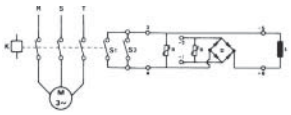

R - Varistors
L - Electromagnet coil
K - Contactor
S1 - NO auxiliary contact
S2 - Electric release switch

Fig. 4 - Connection Diagram for independent feeding.

BRAKING TORQUE

It is possible to obtain a smoother motor stop by reducing the braking torque value. This is done by removing the brake pressure springs.

IMPORTANT:

The springs must be removed in such a way the remaining ones stay symmetrically disposed, avoiding in this way any friction even after operating the motor, and uneven wear of the braking pads.

BRAKE MAINTENANCE

As they are of simple construction, brake motors require low maintenance. What it is required to do is a periodical airgap adjustment.
It is recommended to clean internally the brake motor in cases of penetration of water, dust, etc. or at the time motor periodical maintenance is carried out.

AIRGAP ADJUSTMENT
WEG brake motors are supplied with an initial factory set air gap, that is, a gap between the armature and the frame with the brake energized, pre-adjusted at the factory to the minimum value as indicated in Table 1.

TABLE 1

FRAME	Initial (factory set) Air gap (mm)	Maximum air gap (mm)
71	0.2 - 0.3	0.6
80	0.2 - 0.3	0.6
90 S - 90 L	0.2 - 0.3	0.6
100 L	0.2 - 0.3	0.6
112 M	0.2 - 0.3	0.6
132 S - 132 M	0.3 - 0.4	0.8
160M - 160L	0,3 - 0,4	0,8

Due to the natural wear of the braking pads, the size of the air gap gradually increases without affecting the performance of the brake until it reaches the maximum value shown on Table 1.
To adjust the air gap to its initial value, proceed as follows:
a - Unfasten the bolts and remove the fan cover
b - Remove the protective band
c - Measure the air gap in three places, near the adjustment screws, using a set of feeler gauges.
d - If the width of the gap is equal to or greater than the maximum indicated, or if the three readings are not the same, proceed to adjust as follows:
1) Loosen the fixing bolts and the adjustment screws.
2) Adjust the air gap to the initial value indicated in Table 1 by equally adjusting the three adjustment screws.
   The value of the air gap must be uniform at the three measured points, and be such that the feeler gauge corresponding to the minimum gap, moves freely and the feeler gauge corresponding to the maximum gap cannot be introduced to any of the measured points.
3) Adjust the adjustment screws until the ends touch the motor endshield. Do not adjust any further.
4) Tighten the fixing bolts.
5) Re-check the air gap to ensure the measurements are as per Point 2 above.
6) Replace the protective band.
7) Replace the fan cover

Periodical Inspection and Re-adjustment of the air gap

The time interval between periodical adjustments of the air gap, that is, the number of braking operations until the wear of pads leads the air gap to it maximum value depends on the load, the frequency of operations, and the condition of the working environment, etc. The ideal interval can only be determined by closely observing the performance of the brake motor during the first months of its operating under actual working conditions. As a guide, Table 2 indicates the typical values which can be expected under normal working conditions. The wear of the brake linings depends on the moment of inertia of the load.

EXPLOSION PROOF MOTORS

The motors are designed to operate in ambients considered as dangerous.
These are areas where inflamable gases, steams or combustible gas are or can be in the environment continuous, intermittent or periodically in amount enough to produce explosive mixture or inflamable originated from seepage, repairs or maintenance.
Due to this, the design and manufacturing criteria of the motor components are differentiated from standard motor lines, specially in reference to mechanical aspects.
This motor line follows the recommendations of the following standards: ABNT (Brazilian Association of Technical Standards), IEC (International Electrical Code), UL (Underwriters Laboratories Inc.), CSA (Canadian Standards Association).
The special features of an explosion proof motor are the following:
- Mechanical resistance strong enough to withstand the impact of an internal explosion.
- Dimensional geometric tolerances and controlled rugosity level to avoid passage of flames to the outside and to control the amount of

gases exchanged between inside and outside of the motor.
Below you will find an explanation of the features which make a motor to become explosion proof:

CONSTRUCTION FEATURES:

The features described above, by themselves, do not guarantee that the motor meets the Standard specifications. Then suitable

MECHANICAL RESISTANCE	- Cast iron rugged construction (walls are thicker); corrosion resistant. - Fixation of endshields made with tempered internally haxangled bolts, with high resistance to traction. - More bolts to fix the endshield
TIGHNESS	- Use of epoxy base sealing compound between frame and terminal box - Fitting between endshields and frame with larger dimensions in comparison to standard motors, as per IEC 34-7 Standard. - Use of an internal DE and NDE bearing cap. - Touching surface between T-box and frame and T-box and endshield are machined (which does not require rubber sealing ring).

procedures and tools are required.
Therefore, explosion proof motors can not be assembled or serviced by personnel not authorized.

WARNING:
The operation place of an electric explosion proof motor is harmful to life.

5 - ABNORMAL SITUATIONS DURING OPERATION

ANALYSIS OF SOME ABNORMAL SITUATIONS AND POSSIBLE CAUSES ON ELECTRIC MOTORS:

ABNORMAL SITUATION	POSSIBLE CAUSES
MOTOR DOES NOT START	- Lack of voltage on motor terminals - Low feeding voltage - Wrong connection - Incorrect numbering of leads - Excessive load - Open stationary switch - Damaged capacitor - Auxiliary coil interrupted
LOW STARTING TORQUE	- Incorrect internal connection - Failed rotor - Rotor out of center - Voltage below the rated voltage - Frequency below the rated frequency - Frequency above the rated frequency - Capacitance below that specified - Capacitors series connected instead of parallel
LOW BREAKDOWN TORQUE	- Failed rotor - Rotor with bar inclination above that specified - Rotor out of center - Voltage below the rated voltage - Run capacitor below that specified
HIGH NO LOAD CURRENT	- Air gap above that specified - Voltage above that specified - Frequency below that specified - Wrong internal connection - Rotor out of center - Rotor rubbing on the stator - Defective bearing - Endbells fitted under pressure or badly fitted - Steel magnetic lamination without treatment - Run capacitor out of that specified - Stationary/centrifugal switch do not open
HIGH CURRENT UNDER LOAD	- Voltage out of the rated voltage - Overload - Frequency out of the rated frequency - Belts excessively tightened - Rotor rubbing on the stator
LOW INSULATION RESISTANCE	- Damaged slot insulating materials - Cut leads - Coil head touching the motor frame - Humidity or chemical agents present - Dust on the winding

ABNORMAL SITUATION	POSSIBLE CAUSES
BEARING HEATING	- Excessive amount of grease - Excessive axial thrust or radial force of the belt - Bent shaft - Loose endbells or out of center - Lack of grease - Foreign bodies in the grease
MOTOR OVERHEATING	- Obstructed ventilation - Smaller size fan - Voltage or frequency out of that specified - Rotor rubbing on the shaft - Failed rotor - Stator with insufficient impregnation - Overload - Defective bearing - Consecutive starts - Air gap below that specified - Improper run capacitor - Wrong connections
HIGH NOISE LEVEL	- Unbalancing - Bent shaft - Incorrect alignment - Rotor out of center - Wrong connections - Foreign bodies in the air gap - Foreign bodies between fan and fan cover - Worn bearings - Improper slots combination - Inadequate aerodynamic
EXCESSIVE VIBRATION	- Rotor out of center - Unbalance power supply voltage - Failed rotor - Wrong connections - Unbalanced rotor - Bearing housing with excessive clearance - Rotor rubbing on the stator - Bent shaft - Stator laminations loose - Use of fractional groups on run capacitor single-phase winding

SERVICE

Leaving the factory in perfect conditions is not enough for the electric motor. Although the high quality standard assured by Weg for several years of operation, there will be a day when the motor will require service: This can be corrective, preventive or orientative.
Weg gives great inportance to service as this makes part of a successful sale.
Weg service is immediate and efficient.
At the moment you buy a Weg electric motor, you are also receiving an uncomparable know-how developed in the company and you will count on our authorized services during the whole motor operating life, carefully selected and strategically located in more than fifty countries.

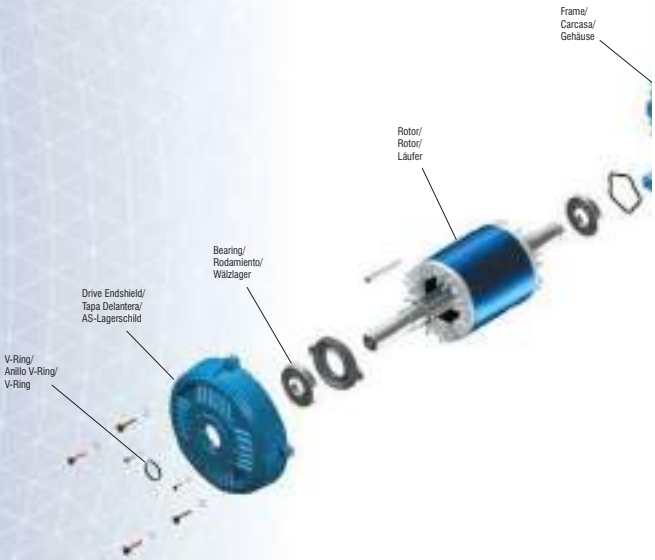

WEG EXPORTADORA S.A.
AV. PREFEITO WALDEMAR GRUBBA, 3000
89256-900 - JARAGUÁ DO SUL - SC - BRAZIL
PHONE: 55 (47) 3372-4000 - FAX: 55 (47) 3372-4060
www.weg.net

CAT 250.09/082006

BALTEC IES

SGT-800 BYPASS EXHAUST SYSTEM

INSTALLATION AND MAINTENANCE MANUAL

Client ..... Vogt Power International
Client PO No V0010431
Client Job No. V17491
Site Location ..... Amata City Industrial Estate, Rayong Province, Thailand
Project Description ..... 2-off SGT-800 Bypass Exhaust Systems
Manual Prepared by ..... DB
Baltec File 8790-90-0002
Date ..... October 2016
Revision Level 3

VOGT POWER INTERNATIONAL
For Construction / Fabrication
Graph: [illegible] | Jun 21-2018

VOGT POWER INTERNATIONAL
V17491-ADXE-500-02
20-Jun-2018

This publication contains essential information for the assembly, installation and safe, efficient operation of the BALTEC IES Bypass Exhaust System.

Carefully read this publication before assembling and installing the exhaust system and review this and any associated documentation before commencing the commissioning procedure.

NOTE:
FAILURE TO COMPLY WITH THESE INSTRUCTIONS COULD, UNDER EXTREME CONDITIONS, CAUSE PREMATURE COMPONENT FAILURE, INVALIDATE THE BALTEC WARRANTY AND MAY RESULT PROPERTY DAMAGE.

WARNING!
NEVER STAND UNDERNEATH A PARTIALLY- OR FULLY-OPEN DIVERTER BLADE UNLESS THE COMPLETE DRIVE SYSTEM IS INSTALLED. IF ACCESS TO THE AREA BENEATH THE DIVERTER BLADE IS NECESSARY (EG. TO INSPECT LANDING BARS), IT SHOULD ONLY BE DONE WITH THE DRIVE SYSTEM FULLY INSTALLED AND ONLY WITH THE BLADE STATIONARY. FAILURE TO FOLLOW THESE SAFETY GUIDELINES MAY RESULT IN SERIOUS INJURY OR DEATH.

As part of our warranty conditions, a BALTEC IES engineer must supervise the commissioning procedure and any subsequent inspections associated with the installation. BALTEC IES cannot be responsible for rectification costs or waiting time incurred by their representatives as a result of damage or incorrect installation. BALTEC IES engineering representatives are available for assembly, commissioning and maintenance advice by writing to the below address, or by faxing or telephoning:

BALTEC INLET & EXHAUST SYSTEMS PTY LTD
FACTORY 2, 35 GILBERT PARK DRIVE
KNOXFIELD, VICTORIA, 3180
AUSTRALIA

TEL: +61 3 9763 6711
FAX: +61 3 9763 6799

PLEASE QUOTE OUR CONTRACT NUMBER **8790** IN ALL COMMUNICATIONS.

REVISION LOG

Date	Rev	Pages Affected	Revision Description
21 Oct 2016	1	all	First issue to client
10 Nov 2016	2	all	Minor update
18 Jun 2018	3	17	Appendix update

TABLE OF CONTENTS

TABLE OF CONTENTS 4
FOREWORD 5
1 INTRODUCTION 6
1.1 Description 6
1.2 Normal Operation 6
2 DESIGN DATA 7
3 RECEIVAL AND STORAGE 8
3.1 Delivery 8
3.2 Receiving Inspection 9
3.3 Storage 9
4 ASSEMBLY INSTRUCTIONS 10
4.1 Diverter Damper 10
4.2 GT Transition Duct & Expansion Joint 11
4.3 HRSG Outlet Duct 12
4.4 HRSG Expansion Joint 13
4.5 Bypass Expansion Joint 14
5 MAINTENANCE OF THE BYPASS EXHAUST SYSTEM 15
5.1 Maintenance and Inspection Intervals 15
5.2 Paintwork 15
5.3 Insulation and Internal Cladding 15
6 RECOMMENDED SPARE PARTS 16
APPENDIX A 17

FOREWORD

The purpose of this Manual

The aim of this manual is to help the end user gain a greater understanding of the BALTEC IES Bypass Exhaust System by detailing adequate procedures for the installation and maintenance of the equipment supplied.

The Arrangement of the Manual

The manual is divided into sections, or chapters, each covering logical sub-divisions. The chapters are numbered with single figures, eg. 1, 2, 3, etc, and may also be divided into sub-sections with decimal numbers following on from the section they are in, eg. 1.1, 1.2, 1.3 etc.

Whilst every care is taken to ensure that the information in the manual is correct, no liability can be accepted by the authors for loss, damage or injury caused by errors in, or omissions from the information given.

Component manufacturers continually make changes to specifications and recommendations, and these, when notified, are incorporated into our manuals at the earliest opportunity.

1 INTRODUCTION

1.1 Description

The BALTEC Bypass Exhaust System with Diverter Damper is designed to direct the hot gases from the gas turbine either through the Bypass Stack (supplied by others) into the atmosphere, clear of the site, or to the HRSG (boiler).

Exhaust gas flow from the turbine outlet is directed to the Diverter Damper via a Horizontal Transition Duct with integral hot-cold Expansion Joint at the GT end. The Horizontal Transition Duct has inlet gas path dimensions of 3.00m diameter and outlet gas path of 3.05 x 3.05m.

A 1m long Extension Duct and Expansion Joint is provided at the HRSG outlet side of the Diverter Damper. The flow to the HRSG may be regulated, according to the position of the damper blade. A blanking plate is also provided at the HRSG outlet for safe isolation of the HRSG during maintenance operations. Diverter and HRSG outlet gas path dimensions are 3.05m x 3.05m square.

Note that the Bypass Stack for this project is supplied by others, and connects with Baltec's expansion joint fitted to the bypass outlet of the diverter damper.

1.2 Normal Operation

In normal operation, the Bypass Stack is only used when the HRSG is unable to accept the hot gases from the Gas Turbine, hence the Stack is not normally in use. Being a passive component in the system, there are no controls, adjustments or maintenance procedures required, and only occasional inspections are necessary.

The Diverter Damper itself also requires minimal maintenance. For details, refer to the Diverter Damper Installation and Maintenance manual 8790-90-0003.

2 DESIGN DATA

TURBINE TYPE ..... Siemens SGT-800
BALTEC UNIT TYPE ..... Exhaust System with Diverter Damper
DIVERTER DRIVE TYPE ..... Electric, Pivot-Drive
ATTITUDE OF SYSTEM (DIVERTER) ..... Horizontal, 90° to GT outlet duct
ATTITUDE OF SYSTEM (STACK – supplied by others) ..... Vertical, upwards gas path
NOMINAL GAS FLOW ..... 131 kg/sec @ ISO Conditions
OPERATING TEMPERATURE ..... 563°C @ ISO Conditions

3 RECEIVAL AND STORAGE

3.1 Delivery

The Exhaust Systems will each be delivered to site broken down into the following components:

- 1-off Diverter Frame with Blade and worm gearboxes pre-fitted
- 1 set Drive System Components (actuator, gearboxes & drive shafts)
- 2-off Seal air fans
- 1-off Set of ancillary equipment. eg. pressure gauges, seal air valves, piping, etc
- 1-off GT Transition Duct and hot-cold Expansion Joint Assembly
- 1-off HRSG Outlet Duct
- 1-off HRSG Blanking Plate
- 1-set HRSG Outlet Expansion Joint Flanges, Belt and Bolster
- 1-set Bypass Outlet Expansion Joint Flanges, Belt and Bolster
- 1 set Connecting bolts and assembly hardware, including joiner bars

The general sequence for assembling the exhaust system shall be as follows:

1. Diverter Damper
2. GT Transition Duct
3. HRSG Outlet Duct
4. HRSG Expansion Joint
5. Bypass Expansion Joint
6. Ancillary equipment (fans, pipes, valves, etc)

This sequence should be taken as a guide only, and the actual assembly order may be changed due to site conditions and requirements. For example, some duct sections may be pre-assembled together at ground level if crane capacity permits.

It is important that the sub-contractor carrying out the assembly must be experienced in carrying out this type of work. These instructions assume familiarity with the nature of work, its difficulties and the precautions which must be taken.

Execution of all work shall be of the best workmanship in order to guarantee fit and function of the delivered materials. All personnel engaged in the assembly must be trades people who are suitably qualified for the task(s) they are performing, with the combined workforce being qualified in full range of welding, boiler-making, rigging, fitting, sheet metal work, lagging and painting.

3.2 Receiving Inspection

Upon delivery to site, a thorough inspection of the equipment should be carried out and any damage or missing components advised to Baltec IES.

Note that all equipment will be delivered to site with Primer Paint only applied (except for some galvanized components or as otherwise agreed with the client as per the contract scope of supply). Application of Top Coat Paint is recommended immediately following erection of the exhaust system. Refer to section 5.2 of this manual for further details on the paint specification.

3.3 Storage

If possible, repair any damaged paint work, particularly if the equipment is likely to be stored for more than several weeks (remember that repair is much easier and safer on the ground compared to hanging in a basket from a crane many metres in the air).

Off-load the sections from the transport vehicles as they arrive at site and store them in a convenient location for access by crane. All the equipment should be put down on timber to raise it clear of the ground. Minimise paintwork damage by using the lifting lugs or webbing type slings. If chain slings are used, ensure the paintwork is protected using materials such as old conveyor belting or carpet.

Temporary bracings are provided for transport and assembly. These bracings need to remain in place until the notification of Baltec's supervisor.

Refer to the Diverter Installation and Maintenance manual 8790-90-0003 for additional unloading/storage procedures specific to the Diverter Damper.

Special care needs to be given to the Anchorage Bolts. These bolts are supplied by Baltec IES (according to Baltec's drawings), and should be handed over to the Civil Contractor prior to the Erection of the Exhaust System. If the end-user decides to provide the anchor bolts at their end, details and specification need to match Baltec drawings. The Civil Contractor is fully responsible for accurately embedding the Anchorage Bolts to the locations set out on the latest revisions of the foundation drawings. The relevant drawings are as follows (revisions given in the Appendix are current at the time of writing this manual):

8790-01-0001 – Exhaust System General Arrangement
8790-01-0002 – Foundation Layouts & Loads
8790-01-0004 – Anchor Details: Diverter Damper
8790-01-0005 – Anchor Details [H1-H4]: Transition Duct & HRSG Outlet Duct

The Civil Contractor is requested to contact either Baltec Inlet & Exhaust Systems (Melbourne, Australia) to ensure that they have the latest revisions of the drawings before commencement of any work.

If there are any deviations to the supplied Anchorage Bolts with respect to drawings, please contact Baltec's Engineers and/or Supervisors for clarification.

The Civil Contractor is also responsible to store the shim plates in a secure place until needed during erection.

4 ASSEMBLY INSTRUCTIONS

The following detailed component assembly and erection procedures are to be read in conjunction with the component drawings listed in the relevant section. A site representative from BALTEC shall first approve any deviation from these instructions.

The general erection sequence is set out in the 8790-05+ series drawings in Appendix A. Appendix A contains the latest revisions of the drawings at the time of printing this manual, however they may be revised prior to delivery of the equipment to site.

The Civil Contractor is requested to contact either Baltec Inlet & Exhaust Systems (Melbourne, Australia) or Vogt Power International (USA) to ensure that they have the latest revisions of the drawings before commencement of any work.

A breakdown of the erection sequence is as follows:

4.1 Diverter Damper

Reference GA drawing: *8790-13-0001*

Reference drawing series: *8790-13+ (refer to Diverter I&M Manual 8790-90-0003)*

Erection procedure:

Prior to commencement, the RLs and CLs of the Diverter Damper foundation footprints and turbine shall be checked against specifications and drawings.

The Support Legs must be positioned first onto the foundation bolts secured into position. The Frame of the Diverter can then be installed and secured onto the Support Legs using the fasteners provided. If necessary, adjust the RLs with the supplied shims. Do not fully tension any fasteners or grout the foundations until the horizontal ducts upstream and downstream of the diverter have been installed and connected to the Diverter (refer to the following sections).

NOTE: The Diverter will typically be transported to site with the worm gearboxes already fitted. The only additional assembly required will be to install the Drive System components such as bevel gearboxes, electric actuator and drive shafts, and ancillary equipment such as the seal air fans. Refer to 8790-90-0003 Diverter Installation and Maintenance Manual for details.

4.2 GT Transition Duct & Expansion Joint

Reference GA drawing:
8790-12-0001 – GT Transition Duct General Arrangement
8790-12-1000 – GT Transition Duct Cold Shell
8790-12-1300 – Personnel Protection for Access Door
8790-12-1400 – Access Ladder
8790-12-2000 – GT Transition Duct Cladding
8790-12-3000 – Expansion Joint Belt Details
8790-12-4000 – Hot Flange Assembly
8790-12-5000 – Support Leg Assembly
8790-12-6000 – Personnel Protection

Reference drawing series: *8790-12+*

Erection procedure:

Prior to commencement, the RLs and CLs of the GT Transition Duct foundation footprints and turbine shall be checked against specifications and drawings.

The Support Legs must be positioned first onto the foundation bolts and secured into position. The GT Transition Duct can then be installed and secured onto the Support Legs using the fasteners provided. If necessary, adjust the RLs with the supplied shims.

Install temporary bolts through the bolt holes on adjacent flanges of the Diverter and GT Transition Duct. Do not fully tighten any fasteners or grout the foundations at this stage until the HRSG Outlet Duct has also been installed (refer to the following section).

All flanged connections between the Diverter Damper and GT Transition must now be fully externally seal welded and internally butt welded as per erection drawing details. After welding is complete, the flange bolts should be removed one-by-one and replaced with joiner bars that are to be welded into position at each side.

Internal splice sections shall be filled with insulation to the depth specified and flashing liner plates should be installed (flashing liners are part of the 8790-13+ Diverter drawing set – refer to the Diverter I&M Manual 8790-90-0003 for details). Overhead insulation can be secured temporarily with wire tied between the liner plates. There must be a washer on every pin before each liner plate is installed. After installing the liner plates fit a washer and nut on every pin. Nip the nut and back off ½ turn before tack welding. All nuts are to be tack welded to the stud and to the washer.

The GT Expansion Joint components are delivered to site in disassembled form. Once the Gas Turbine and the GT Transition Duct are in place, the Hot Flange may be positioned and welded to the Gas Turbine Outlet Flange following Siemens' standard procedure. Next install the downstream EJ liners (2017 & 2018) to the GT Transition Duct with nuts & washers (2024) supplied.

Install the Bolster from outside, starting at one end and working around, pushing it into the cavity. Then install the Expansion Joint Belt and clamp into position using the clamp bars (3003 for hot side & 3004 for cold side) and nuts & washers (3006 & 3007) provided. Install the Ladder and Personnel Protection according to the relevant 8790-12+ series drawings.

Note: After installation and prior to start-up of the turbine, the tension of all Expansion Joint Belt clamp nuts should be checked and tightened.

4.3 HRSG Outlet Duct

Reference GA drawing: *8790-14-0001 –HRSG Outlet Duct General Arrangement*
8790-14-0300 – Support Legs
8790-14-0001 – Blanking Plate General Arrangement

Reference drawing series: *8790-14+*

Erection procedure:

Prior to commencement, the RLs and CLs of the HRSG Outlet Duct foundation footprints and turbine shall be checked against specifications and drawings.

The Support Legs must be positioned first onto the foundation bolts and secured into position. The HRSG Outlet Duct can then be installed and secured onto the Support Legs using the fasteners provided. If necessary, adjust the RLs with the supplied shims.

Install temporary bolts through the bolt holes on adjacent flanges of the Diverter and HRSG Outlet Duct, and tighten firmly. Tighten all foundation nuts firmly on the Diverter Damper, GT Transition Duct and HRSG Outlet Duct and again check the RLs. The base plates & shims should then be grouted using a suitable non-shrink grout. Minimum compressive strength recommended for the grout is 350 kgf/cm^2 (35 MPa).

All flanged connections between the Diverter Damper and HRSG Outlet must now be fully externally seal welded and internally butt welded as per erection details. After seal welding is complete, the flange bolts should be removed one-by-one and replaced with joiner bars that are to be welded into position at each side.

Internal splice sections shall be filled with insulation to the depth specified and flashing liner plates should be installed (flashing liners are part of the 8790-13+ Diverter drawing set – refer to the Diverter I&M Manual 8790-90-0003 for details). Overhead insulation can be secured temporarily with wire tied between the liner plates.

Ensure that the liner plates are overlapping with the joints oriented so that the exhaust stream flows over the joint rather than into it.

There must be a washer on every pin before each liner plate is installed. After installing the liner plates fit a washer and nut on every pin. Nip the nut and back off ½ turn before tack welding. All nuts are to be tack welded to the stud and to the washer.

NOTE: It is recommended that the Expansion Joint at the outlet of the HRSG Outlet Duct is not installed until installation of the HRSG unit has been completed (see section 4.4). Until such time, the Blanking Plate should be installed and the Expansion Joint components should be kept in storage, preferably with the flanges laid flat and supported on wooden beams or blocks, where there is minimal risk of damage occurring prior to installation.

4.4 HRSG Expansion Joint

Reference GA drawings: *8790-15-0001 – HRSG Expansion Joint*
8790-15-1900 – Protection Mesh Panel

Reference drawing series: *8790-15+*

Erection procedure:

Prior to commencement, the RLs and CLs of the interfacing flanges to which the Expansion Joint will be connected shall be checked against specifications.

The expansion joints are shipped as loose components for this project and are assembled in situ as part of the erection procedure.

Firstly, install both upstream and downstream flanges to the HRSG Extension Duct and HRSG Inlet Duct (supplied by others), respectively, with permanent erection bolts. Fiberglass Ladder Tape gasket material must be inserted between the mating flanges prior to bolting to ensure a gas-tight seal. This connection should be left as bolted-type to allow the Expansion Joint removal and/or Blanking Plate insertion. Alternatively, the connection to the HRSG Inlet Duct may be welded, at the discretion of the HRSG supplier. Note that for this Expansion Joint the Inlet Liner assembly is integral with the Expansion Joint Inlet Flange.

Install the Expansion Joint Belt and clamp into position using the clamp channels (0500, 0600 & 0700) and fixing nuts provided. Ensure splice washers (0900 & 1000) are fitted at joins between adjacent clamp channels as per the drawing.

Ensure the insulation has been installed right up to the HRSG Inlet Duct Flange – install additional insulation if required. Next install the Bolster from inside the duct, starting at one end and working around, pushing it into the cavity between the expansion joint belt and the pre-installed inlet liners, checking that there are no gaps present between the Bolster and insulation at the HRSG side after installation.

Install the Expansion Joint Outlet Liners by firstly sliding the leading edge under the inlet liners. These overlap into the HRSG Inlet Duct and connect to the first two rows of liner pins in the HRSG Inlet Duct. Follow VPI standard procedure for installing and tack-welding the nuts.

Perform a final check to ensure that the overlap of the internal flow liners is correctly orientated relative to the direction of gas flow.

Install the Protection Mesh Panel to the top & side of the Expansion Joint as per the drawings, and connect the turnbuckles between the Expansion Joint Inlet Flanges and the anchor points provided on the HRSG Extension Duct (these allow the Flange to be retracted prior to inserting the Blanking Plate)

NOTE: After installation and prior to start-up of the turbine, the tension of all Expansion Joint Belt clamp nuts should be checked and tightened.

4.5 Bypass Expansion Joint

Reference GA drawings: *8790-16-0001 – Bypass Expansion Joint*
8790-16-0200 – Outlet Liner Assembly

Reference drawing series: *8790-16+*

Erection procedure:

Prior to commencement, the RLs and CLs of the interfacing flanges to which the Expansion Joint will be connected shall be checked against specifications.

The expansion joints are shipped as loose components for this project and are assembled in situ as part of the erection procedure.

Firstly install both upper and lower flanges to the Lower Transition Duct (supplied by others) and the Diverter Bypass Outlet, respectively, with temporary bolts. The connections between the Diverter Damper and Expansion Joint must now be fully externally seal welded and internally butt welded as per erection details. After seal welding is complete, the flange bolts should be removed one-by-one and replaced with joiner bars that are to be welded into position at each side.

Once welding is completed, install the Expansion Joint Belt and clamp into position using the clamp channels (0500 & 0501) and fixing nuts provided. Ensure splice washers (0502 & 0503) are fitted at joins between adjacent clamp channels as per the drawing.

Install the Expansion Joint Outlet Liners. These overlap into the Lower Transition Duct and connect to the bottom two rows of liner pins in the Lower Transition Duct. Follow VPI standard procedure for installing and tack-welding the nuts.

Ensure the insulation has been installed right up to the Diverter Bypass Outlet Flange and the Lower Transition Duct Inlet Flange – install additional insulation if required. Next install the Bolster from inside the duct, starting at one end and working around, pushing it into the cavity between the expansion joint belt and the outlet liner, checking that there are no gaps present between the Bolster and insulation at the Diverter Bypass Outlet after installation.

Finally, install the Expansion Joint Inlet Liners. These actually form part of the 8790-13+ Diverter drawing set – see I&M Manual 8790-90-0003 for details.

Perform a final check to ensure that the overlap of the internal flow liners is correctly orientated relative to the direction of gas flow.

NOTE: After installation and prior to start-up of the turbine, the tension of all Expansion Joint Belt clamp nuts should be checked and tightened.

5 MAINTENANCE OF THE BYPASS EXHAUST SYSTEM

5.1 Maintenance and Inspection Intervals

The recommended maintenance intervals are the minimum necessary to ensure satisfactory life of the exhaust system. However at the discretion of the Site Engineer, it may be necessary to increase or decrease the maintenance intervals as dictated by local conditions. Provided that all maintenance is ultimately carried out, the intervals may be varied by plus or minus 20% without detriment.

If a maintenance problem is discovered and shut down for repair is not possible then obviously more frequent inspections and reports on the progress of the problem are necessary.

The whole system is subject to turbulent gas flows and high noise levels which can cause the vibration of some components, and over time it is possible for fatigue cracks to develop. Note that Stainless steel components are more susceptible to this than plain carbon steel. This type of failure needs to be checked for, but is only likely to occur after many years of operation.

5.2 Paintwork

Physical damage to the paintwork will likely occur from time to time and a yearly inspection of the paintwork is advisable. Damaged areas should be noted and repairs done to restore it. Discolouration due to rust should be inspected and corrected eg. Joints re-sealed. Refer to Baltec IES Paint Specification document in Appendix A for technical details of paint.

Reference Specification: 8790-90-0043

5.3 Insulation and Internal Cladding

With the system shut down it is possible to visually inspect the interior of the Diverter Damper, GT Transition Duct and HRSG Outlet Duct to ensure that all cladding is intact. The Bypass Stack (supplied by others) may also be visually inspected from the Diverter by looking up through the bypass outlet.

After several years of operation, a check of the duct shell temperature distribution using an infra-red camera when the stack is in use will indicate the condition of the insulation. Heat damaged paint work is the usual indicator of damaged or displaced insulation.

6 RECOMMENDED SPARE PARTS

The Exhaust System Components are designed for many years of trouble-free operation, so no spares are required apart from holding a few joint bolts and some touch-up paint. Premature failure of components is very unlikely, hence any major spares cannot be determined until a problem is detected during operation.

Refer to the Diverter Damper Installation and Maintenance manual 8790-90-0003 for details of recommended spares specific to the Diverter Damper.

APPENDIX A

Exhaust System Drawings (26 drawings total):

Drawing/Doc No	*Rev*	*Title*
8790-01-0001	02	Exhaust System General Arrangement
8790-01-0002	01	Foundation Layout & Loads
8790-01-0003	01	Diverter Damper Interface Flanges
8790-01-0004	01	Diverter Foundation Anchor Details
8790-01-0005	01	Exhaust System Anchor Details
8790-05-0001	01	Site Erection Completed Assembly & Flange Connection Summary
8790-05-0010	01	Site Erection Flanged Connection Details
8790-05-0020	01	Site Erection General Sequence
8790-05-0100	02	Site Erection – Diverter Lifting Points
8790-12-0001	02	GT Transition Duct & GT Expansion Joint General Arrangement
8790-12-1000	01	GT Transition Duct – Cold Shell
8790-12-1300	01	GT Transition Duct - Personnel Protection for Access Door
8790-12-1400	01	GT Transition Duct – Access Ladder
8790-12-2000	01	GT Transition Duct – Cladding
8790-12-3000	01	GT Transition Duct – Expansion Joint Belt
8790-12-4000	01	GT Transition Duct – Hot Flange
8790-12-5000	01	GT Transition Duct – Support Leg Assembly
8790-12-6000	01	GT Transition Duct – Personnel Protection
8790-13-0001	04	Diverter Damper General Arrangement
8790-14-0001	01	HRSG Outlet Duct General Arrangement
8790-14-0300	01	HRSG Outlet Duct – Support Legs
8790-15-0001	01	HRSG Expansion Joint General Arrangement
8790-15-0300	01	HRSG Expansion Joint Liner Assembly
8790-15-1900	01	HRSG Expansion Joint Protection Mesh Panel
8790-16-0001	01	Bypass Expansion Joint General Arrangement
8790-16-0200	01	Bypass Expansion Joint Outlet Liner Assembly
8790-17-0001	01	Blanking Plate General Arrangement

Paint Specification Document (1 document):

Drawing/Doc No	*Rev*	*Title*
8790-90-0043	01	Paint Specification

Diverter Damper Drawings:

Drawing/Doc No	*Title*
8790-13+	Refer to Diverter Damper Installation and Maintenance Manual 8790-90-0003 for details

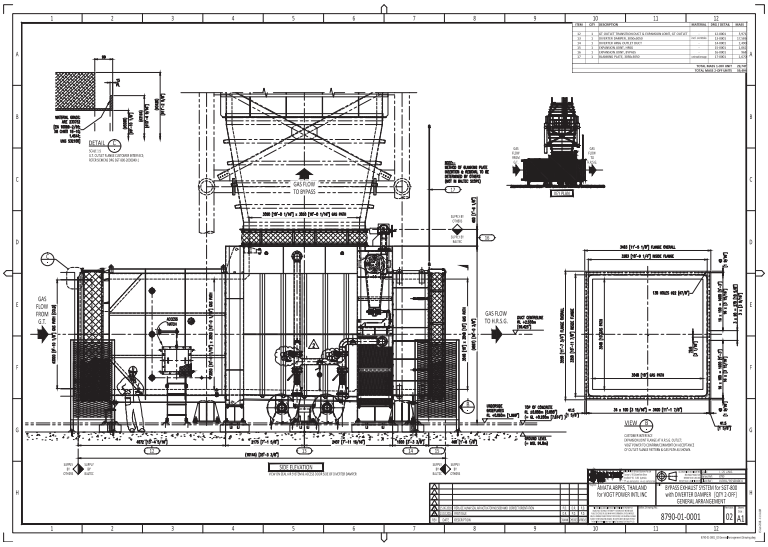

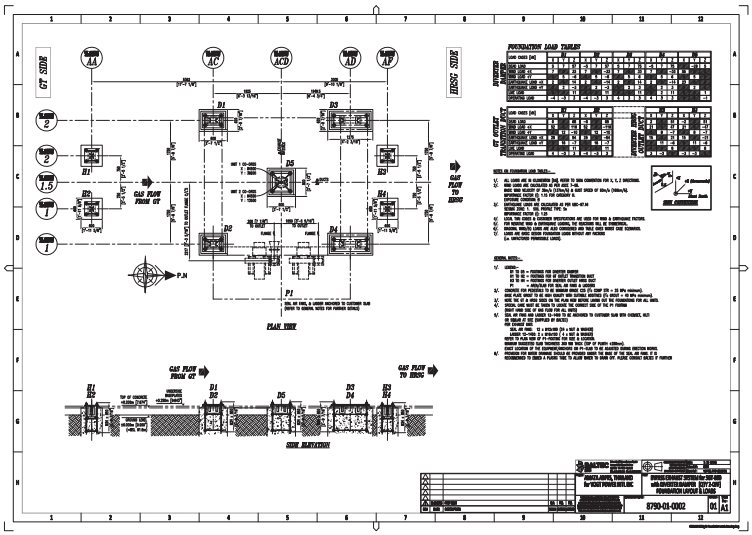

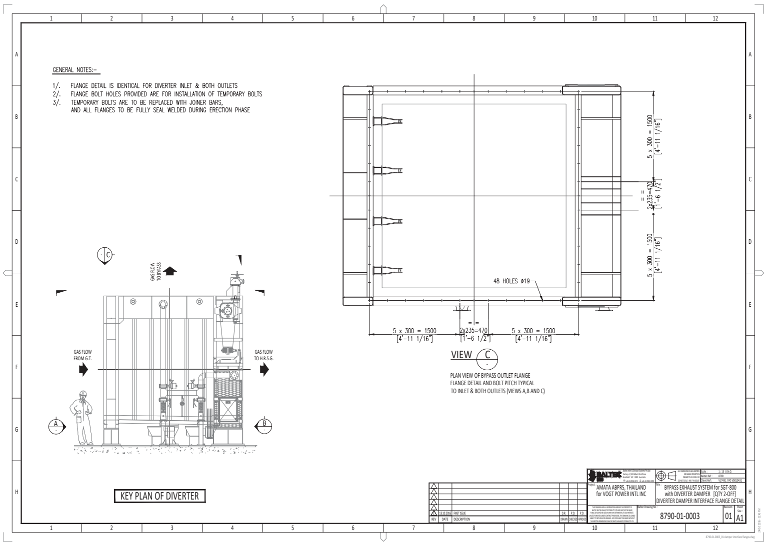
GENERAL NOTES:-
1/. FLANGE DETAIL IS IDENTICAL FOR DIVERTER INLET & BOTH OUTLETS
2/. FLANGE BOLT HOLES PROVIDED ARE FOR INSTALLATION OF TEMPORARY BOLTS
3/. TEMPORARY BOLTS ARE TO BE REPLACED WITH JOINER BARS, AND ALL FLANGES TO BE FULLY SEAL WELDED DURING ERECTION PHASE
48 HOLES ⌀19
VIEW C
PLAN VIEW OF BYPASS OUTLET FLANGE FLANGE DETAIL AND BOLT PITCH TYPICAL TO INLET & BOTH OUTLETS (VIEWS A,B AND C)
KEY PLAN OF DIVERTER
AMATA ABPRS, THAILAND for VOGT POWER INTL INC
BYPASS EXHAUST SYSTEM for SGT-800 with DIVERTER DAMPER [QTY 2-OFF] DIVERTER DAMPER INTERFACE FLANGE DETAIL
8790-01-0003

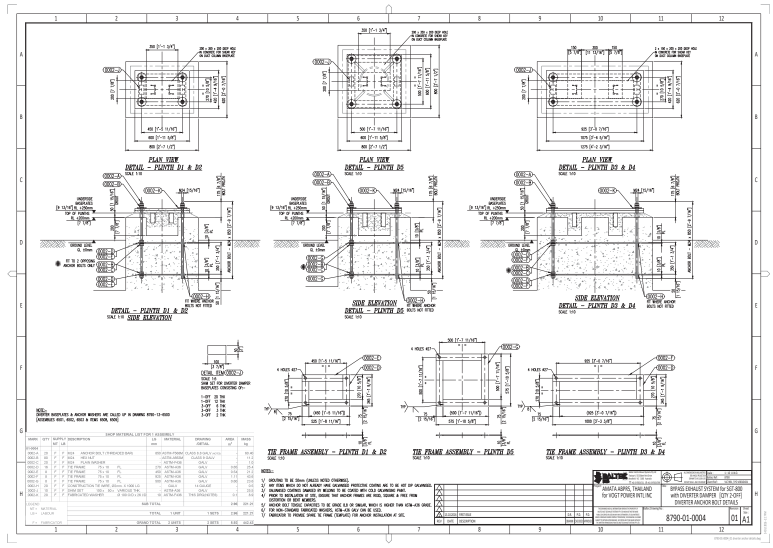
PLAN VIEW DETAIL - PLINTH D1 & D2
PLAN VIEW DETAIL - PLINTH D5
PLAN VIEW DETAIL - PLINTH D3 & D4
DETAIL - PLINTH D1 & D2 SIDE ELEVATION
SIDE ELEVATION DETAIL - PLINTH D5
SIDE ELEVATION DETAIL - PLINTH D3 & D4
TIE FRAME ASSEMBLY - PLINTH D1 & D2
TIE FRAME ASSEMBLY - PLINTH D5
TIE FRAME ASSEMBLY - PLINTH D3 & D4
AMATA ABPRS, THAILAND for VOGT POWER INTL INC
BYPASS EXHAUST SYSTEM for SGT-800 with DIVERTER DAMPER [QTY 2-OFF] DIVERTER ANCHOR BOLT DETAILS
8790-01-0004

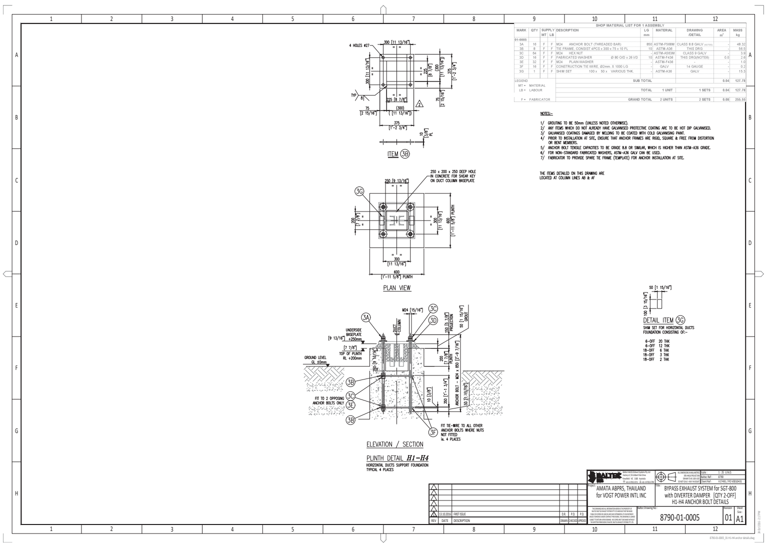
PLAN VIEW
ELEVATION / SECTION
PLINTH DETAIL H1-H4
AMATA ABPRS, THAILAND for VOGT POWER INTL INC
BYPASS EXHAUST SYSTEM for SGT-800 with DIVERTER DAMPER [QTY 2-OFF] H1-H4 ANCHOR BOLT DETAILS
8790-01-0005

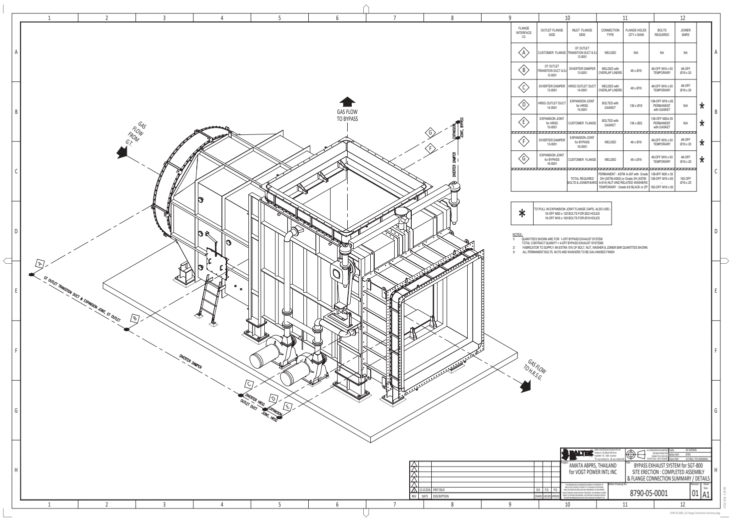
GAS FLOW TO BYPASS
GAS FLOW TO H.R.S.G.
AMATA ABPRS, THAILAND for VOGT POWER INTL INC
BYPASS EXHAUST SYSTEM for SGT-800 SITE ERECTION - COMPLETED ASSEMBLY & FLANGE CONNECTION SUMMARY / DETAILS
8790-05-0001

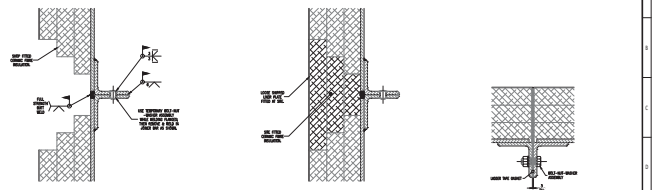

TYPICAL WELDED FLANGE DETAIL

SCALE 1:10
STEP 1 WELDING OF NEOPRENE & JOINER BARS.

TYPICAL WELDED FLANGE DETAIL

SCALE 1:10
STEP 2 WELDING, EXPANDED FOAM INSULATION & GASKET TAPERED FOAM PIECES.
(EXCEPT FOR BOLTED EXPANSION JOINT)

TYPICAL BOLTED FLANGE DETAIL

SCALE 1:10
BOLTING EXPANSION JOINT ATTACH BOLT TO EXPANSION JOINT FLANGE, & NOT SHOWING AS A BOLTED CONNECTION. REFER TO FIELD MANUAL FOR EXPANSION JOINT CONNECTION ARRANGEMENT.

JOINER BAR DETAIL 416x20

SCALE 1:1
MATERIAL : A516-60
WELD BY HEADER = 152 GT

ANANTA AMPHIS, THAILAND for VOGT POWER INTL INC	BYPASS EXHAUST SYSTEM for SGT-800 SITE ERECTION : FLANGE CONNECTION JOINER BAR DETAILS		
8790-05-0010	01	A1	

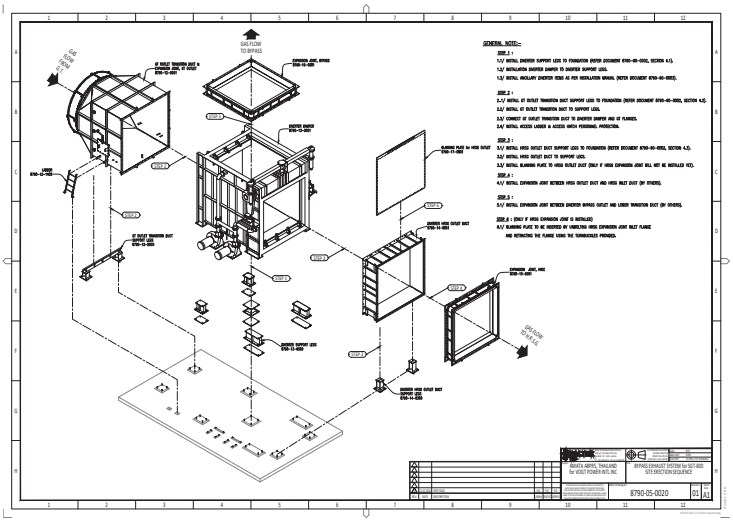

GENERAL NOTE:-

SEQ# 1 :
1.1/ INSTALL DAMPER SUPPORT LEGS TO FOUNDATION (REFER DOCUMENT 8790-00-0002, SECTION 4.1).
1.2/ INSTALLATION DAMPER DAMPER TO DAMPER SUPPORT LEGS.
1.3/ INSTALL ANCILLARY DAMPER SEAL AS PER INSTALLATION MANUAL (REFER DOCUMENT 8790-00-0002).

SEQ# 2 :
2.1/ INSTALL GT OUTLET TRANSITION DUCT SUPPORT LEGS TO FOUNDATION (REFER DOCUMENT 8790-00-0002, SECTION 4.5)
2.2/ INSTALL GT OUTLET TRANSITION DUCT TO SUPPORT LEGS.
2.3/ CONNECT GT OUTLET TRANSITION DUCT TO DAMPER DAMPER AND GT FLANGES.
2.4/ INSTALL ACCESS LADDER & ACCESS HATCH PERSONNEL PROTECTION.

SEQ# 3 :
3.1/ INSTALL HRSG OUTLET DUCT SUPPORT LEGS TO FOUNDATION (REFER DOCUMENT 8790-00-0002, SECTION 4.5).
3.2/ INSTALL HRSG OUTLET DUCT TO SUPPORT LEGS.
3.3/ INSTALL PLANNING PLATE TO HRSG OUTLET DUCT (ONLY IF HRSG EXPANSION JOINT WILL NOT BE INSTALLED YET).

SEQ# 4 :
4.1/ INSTALL EXPANSION JOINT BETWEEN HRSG OUTLET DUCT AND HRSG INLET DUCT (BY OTHERS).

SEQ# 5 :
5.1/ INSTALL EXPANSION JOINT BETWEEN DAMPER BYPASS OUTLET AND LOWER TRANSITION DUCT (BY OTHERS).

SEQ# 6 : (ONLY IF HRSG EXPANSION JOINT IS INSTALLED)
6.1/ PLANNING PLATE TO BE REMOVED BY UNBOLTING HRSG EXPANSION JOINT INLET FLANGE AND REFASTENING THE FLANGE USING THE TEMPORARILY PROVIDED.

ANANTA AMPHIS, THAILAND for VOGT POWER INTL INC	BYPASS EXHAUST SYSTEM for SGT-800 SITE ERECTION SEQUENCE		
8790-05-0020	01	A1	

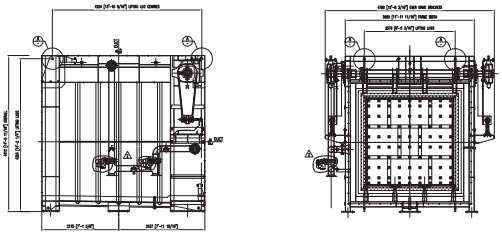

ANANTA AMPHIS, THAILAND for VOGT POWER INTL INC	BYPASS EXHAUST SYSTEM (EXPANSION) DAMPER DAMPER LIFTING POINTS		
8790-05-0100	02	A1	

ITEM	QTY	DESCRIPTION	MATL	DRW/ SHT	MASS (kg)
1100	1	SHELL ASSEMBLY	-	12-1000	4,[illegible]
1105	1	ACCESS DOOR ASSEMBLY	-	12-1105	81,4
1200	1	ACCESS DOOR 80-NPW ASSEMBLY	-	12-1200	5,4
1400	1	HEAT SEAMED - ACCESS DOOR ASSEMBLY	-	12-1300	5,4
1400	1	LADDER ASSEMBLY	-	12-1400	26,4
1800	1	LINER PLATE ASSEMBLY	-	12-0000	2,700,4
5800	1	EXPANSION BELT & HARDWARE	-	12-3000	751,7
4800	1	INLET FLANGE ASSEMBLY	-	12-4000	1[illegible],0
5800	1	SUPPORT LEG ASSEMBLY	-	12-5000	195,2
6800	1	PERSONAL PROTECTION ASSEMBLY	-	12-6000	24,2
		SUB TOTAL			5,872
		TOTAL	1 UNIT	2 SETS	5,872
		GRAND TOTAL	2 UNITS	2 SETS	11,742

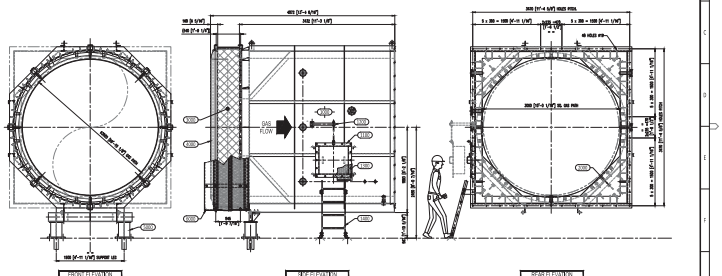

GENERAL NOTES:
1/ ALL TOLERANCES TO BE NOTED CHANGED.
2/ ALL FLANGES ARE DRAWN TO ASTM STANDARD.
3/ ALL HOLES 4mm PLUS OR MINUS, NOT SAME.
4/ CHECK HOLES PLACE ON ALL JOINTING SHEET.
5/ CHECK TO CONFIRM PART DIMENSIONS.

ANANTA AMPHIS, THAILAND for VOGT POWER INTL INC	GT OUTLET TRANSITION DUCT & EJ GENERAL ARRANGEMENT		
8790-12-0001	02	A1	

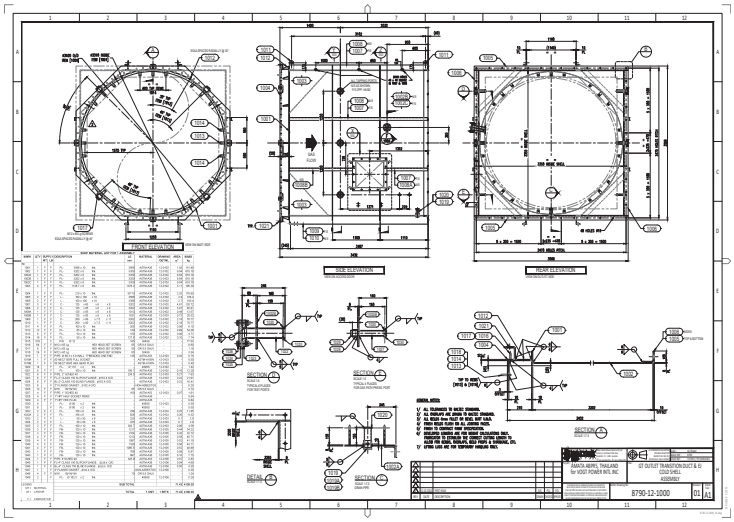
FRONT ELEVATION
SIDE ELEVATION
REAR ELEVATION
SECTION
DETAIL
GENERAL NOTES:
1/ ALL TOLERANCES TO BE MADE AVAILABLE TO THE ERECTOR ON THE DRAWINGS.
2/ ALL WELDS SHALL BE FULLY TO WELD, BUT LEAK.
3/ FINISH WELDS FLUSH ON ALL JOINTS PRIOR TO ASSEMBLY.
4/ ALL WELDS SHALL BE FULLY TO WELD, BUT LEAK.
5/ DRAWING SHOWS ONLY FOR PRODUCT CALCULATION ONLY. FABRICATOR TO CONSULT WITH DESIGNER ENGINEER TO ACCOMMODATE THE ACTUAL SITE CONDITION.
6/ ALL WELDS SHALL BE FULLY TO WELD, BUT LEAK.
7/ OTHER LOAD AND FOR TEMPORARY WORKING PURPOSE.
AMATA ABIPEL THAILAND for VOGT POWER INTL INC
GT OUTLET TRANSITION DUCT & EJ COLD SHELL ASSEMBLY
8790-12-1000
01
A1

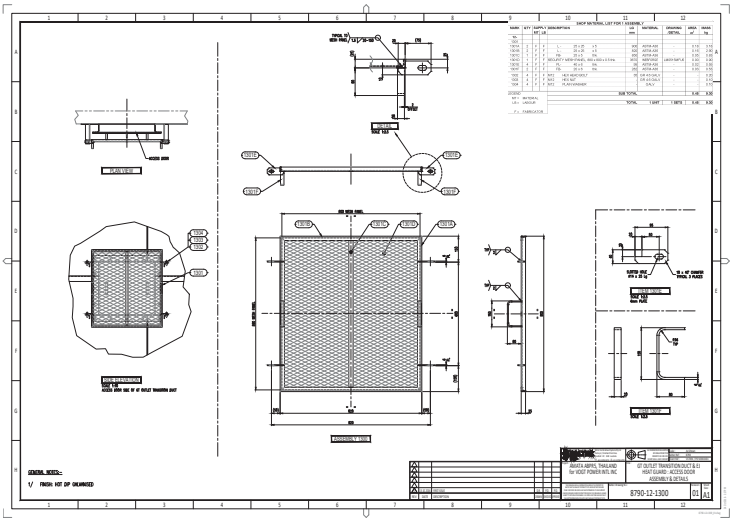
PLAN VIEW
ASSEMBLY VIEW
GENERAL NOTES:-
1/ FINISH: HOT DIP GALVANIZED
AMATA ABIPEL THAILAND for VOGT POWER INTL INC
GT OUTLET TRANSITION DUCT & EJ HOST GUARD - ACCESS DOOR ASSEMBLY & DETAILS
8790-12-1300
01
A1

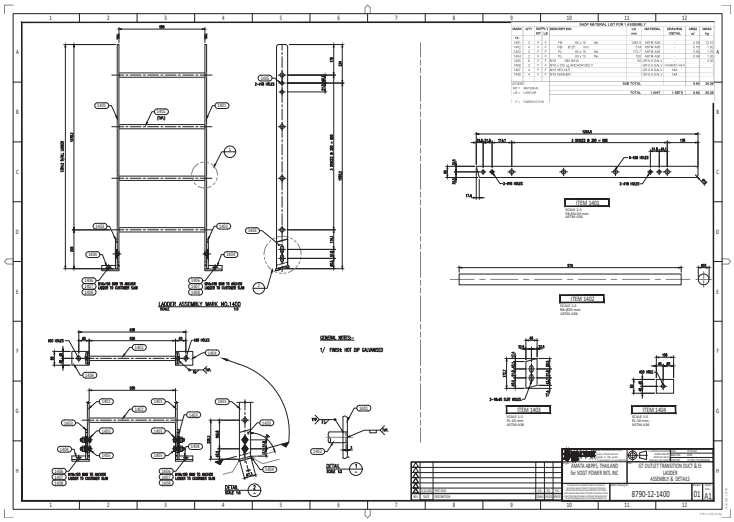
LADDER ASSEMBLY MARK NO.1400
GENERAL NOTES:-
1/ FINISH: HOT DIP GALVANIZED
AMATA ABIPEL THAILAND for VOGT POWER INTL INC
GT OUTLET TRANSITION DUCT & EJ LADDER ASSEMBLY & DETAILS
8790-12-1400
01
A1

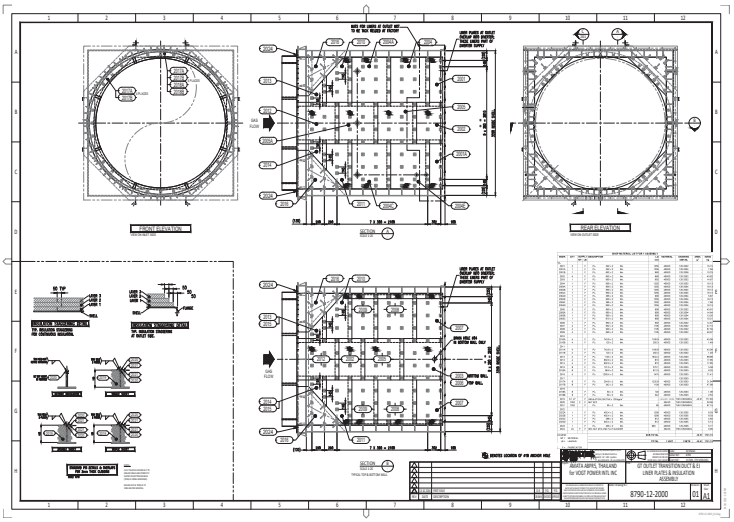
FRONT ELEVATION
REAR ELEVATION
AMATA ABIPEL THAILAND for VOGT POWER INTL INC
GT OUTLET TRANSITION DUCT & EJ LINER PLATES & INSULATION ASSEMBLY
8790-12-2000
01
A1

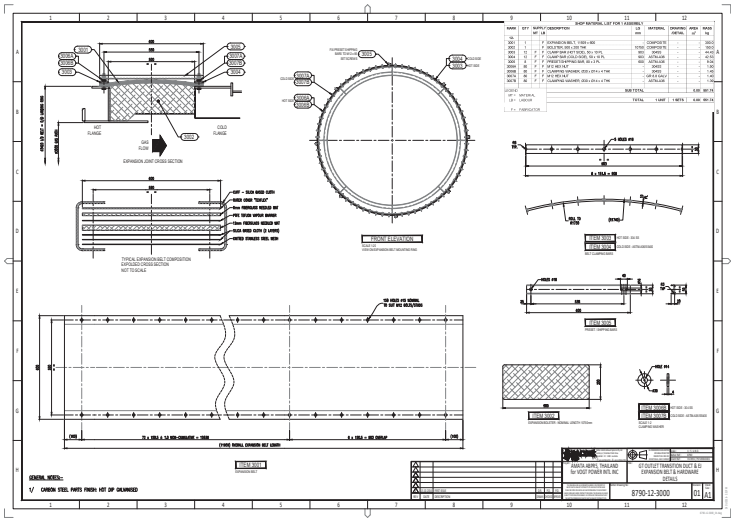
SHOP MATERIAL LIST FOR 1 ASSEMBLY
MARK | QTY | SUPPLY DESCRIPTION | UK mm | MATERIAL | DRAWING /DETAIL | AREA m² | MASS kg
3001 | 1 | F | EXPANSION BELT, 1100 x 200 | COMPOSITE | - | - | 28kG
3002 | 1 | F | SOLUTION, 600 x 200 THK | STEEL COMPOSITE | - | - | 180kG
3003 | 12 | F | CLAMP BAR (CUT STEEL 50 x 10 PT) | 50 x 10 PL | - | - | 44.4C
3004 | 8 | F | FIREBRICK (FIREBRICK 230 x 114 x 75 PL) | 230 x 114 x 75 | - | - | 8.0C
3005 | 8 | F | FIREBRICK/PAPER BAR (50 x 75 PL) | 600 ASTM A36 | - | - | 9.0C
3006 | 16 | F | SET BELT | 20MM | - | - | 1.4C
3007 | 16 | F | CLAMPING SPANNER (200 x 20 PL) x 4 THK | 200 x 20 PL | - | - | 1.4C
3008 | 16 | F | CLAMP BAR | 100 x 10 PL | - | - | 1.4C
3009 | 16 | F | CLAMPING WASHERS (200 x 20 x 4 THK | ASTM A36 | - | - | 1.4C
SUB TOTAL
TOTAL 1 UNIT 1 SETS 0.0C 0C.2C
FRONT ELEVATION
ITEM 3001
ITEM 3004
ITEM 3005
ITEM 3006
ITEM 3007
ITEM 3008
ITEM 3009
GENERAL NOTES:-
1/ CARBON STEEL PARTS FINISH: HOT DIP GALVANIZED
AMATA ABPEL THAILAND
for VOGT POWER INTL INC
GT OUTLET TRANSITION DUCT & EJ
EXPANSION BELT & HARDWARE
DETAILS
8790-12-3000
01
A1

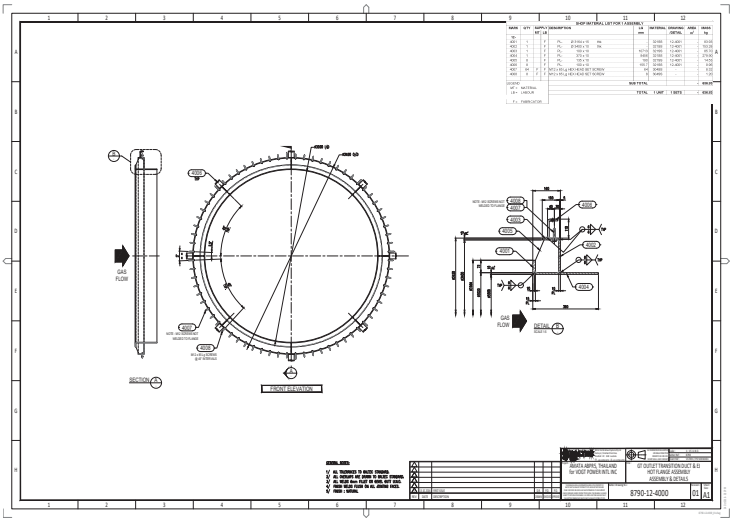
SHOP MATERIAL LIST FOR 1 ASSEMBLY
MARK | QTY | SUPPLY DESCRIPTION | UK mm | MATERIAL /DETAIL | DRAWING /DETAIL | AREA m² | MASS kg
4001 | 1 | F | PL | 20 X 914 x 10 | PIN | - | 50/40 | 0.4001 | 0.0C
4002 | 1 | F | PL | 20 X 1400 x 10 | PIN | - | 50/40 | 1400.00 | 0.0C
4003 | 1 | F | PL | 10 X 1 | - | 50/40 | 0.4001 | 0.0C
4004 | 1 | F | PL | 10 x 10 | - | 50/40 | 0.4001 | 0.0C
4005 | 6 | F | PL | 100 x 10 | - | 50/40 | 0.4001 | 14.0C
4006 | 6 | F | PL | 100 x 10 | - | 50/40 | 0.4001 | 14.0C
4007 | 96 | F | M12 x 80 x 40 HEX HEAD SET SCREW | - | 304 | 304/40 | - | 0.0C
4008 | 6 | F | M12 x 80 x 40 HEX HEAD SET SCREW | - | 304 | 304/40 | - | 0.0C
SUB TOTAL
TOTAL 1 UNIT 1 SETS 0.0C 0C.2C
SECTION
FRONT ELEVATION
DETAIL
GENERAL NOTES:-
1/ ALL THICKNESS TO ONLY STANDARD.
2/ ALL DIMENSIONS ARE GIVEN TO ONLY STANDARD.
3/ ALL WELDS 6mm FILLET OR GIVEN, UNLESS OTHERWISE.
4/ FINISH WELDS FLUSH ON ALL EXTERNAL FACES.
5/ FINISH : GENERAL
AMATA ABPEL THAILAND
for VOGT POWER INTL INC
GT OUTLET TRANSITION DUCT & EJ
HOTT FLANGE ASSEMBLY
ASSEMBLY & DETAILS
8790-12-4000
01
A1

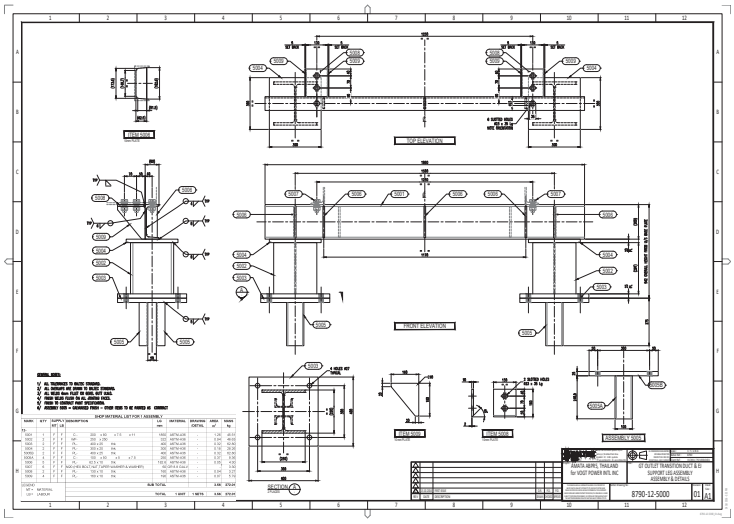
SHOP MATERIAL LIST FOR 1 ASSEMBLY
MARK | QTY | SUPPLY DESCRIPTION | UK mm | MATERIAL | DRAWING /DETAIL | AREA m² | MASS kg
5001 | 1 | F | CH. 200 x 50 x 7.5 x 11 | 5001 ASTM A36 | - | 1.0C | 40.4C
5002 | 1 | F | CH. 200 x 50 | 200 ASTM A36 | - | 0.4C | 16.4C
5003 | 1 | F | CH. 400 x 50 | 400 ASTM A36 | - | 0.4C | 36.4C
5004 | 2 | F | CH. 300 x 50 | 300 ASTM A36 | - | 0.7C | 24.0C
5005 | 2 | F | CH. 300 x 50 | 300 ASTM A36 | - | 0.7C | 24.0C
5006 | 2 | F | CH. 200 x 50 x 5 x 7.5 | 200 ASTM A36 | - | 0.2C | 9.4C
5007 | 2 | F | CH. 50 X 10 | 50 X ASTM A36 | - | 0.0C | 4.0C
5008 | 2 | F | PL. 100 x 10 (PLATE X-WASHER) | 100 X ASTM A36 | - | - | 1.4C
5009 | 2 | F | PL. 100 x 10 | 100 ASTM A36 | - | 0.1C | 0.1C
5010 | 4 | F | PL. 100 x 10 | 100 ASTM A36 | - | 0.0C | 0.7C
SUB TOTAL
TOTAL 1 UNIT 1 SETS 0.0C 0C.0C
FRONT ELEVATION
ITEM 5002
ITEM 5003
ITEM 5004
ITEM 5005
ITEM 5006
ITEM 5007
ITEM 5008
ITEM 5009
ITEM 5010
SECTION
GENERAL NOTES:-
1/ ALL THICKNESS TO ONLY STANDARD.
2/ ALL DIMENSIONS ARE GIVEN TO ONLY STANDARD.
3/ ALL WELDS 6mm FILLET OR GIVEN, UNLESS OTHERWISE.
4/ FINISH WELDS FLUSH ON ALL EXTERNAL FACES.
5/ FINISH : GENERAL
6/ ASSEMBLY 5000 = CHANNELS FINISH = STEEL PLATE TO BE ANNEED AS CONNECT
AMATA ABPEL THAILAND
for VOGT POWER INTL INC
GT OUTLET TRANSITION DUCT & EJ
SUPPORT LEG ASSEMBLY
ASSEMBLY & DETAILS
8790-12-5000
01
A1

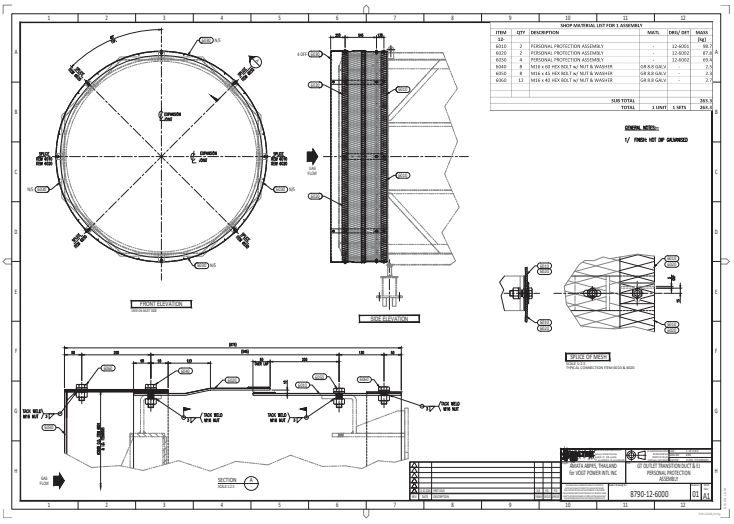
SHOP MATERIAL LIST FOR 1 ASSEMBLY
ITEM | QTY | DESCRIPTION | MAT'L | DRW/ DET | MASS [kg]
6010 | 2 | PERSONAL PROTECTION ASSEMBLY | - | 12-6001 | 87.0
6010 | 2 | PERSONAL PROTECTION ASSEMBLY | - | 12-6002 | 87.0
6030 | 4 | PERSONAL PROTECTION ASSEMBLY | - | 12-6003 | 21.0
6060 | 8 | M16 x 40 HEX BOLT w/ NUT & WASHER | GR 8.8 GALV | - | - | 2.5
6060 | 8 | M16 x 45 HEX BOLT w/ NUT & WASHER | GR 8.8 GALV | - | - | 2.5
6060 | 12 | M16 x 45 HEX BOLT w/ NUT & WASHER | GR 8.8 GALV | - | - | 2.5
SUB TOTAL 265.5
TOTAL 1 UNIT 1 SETS 265.5
GENERAL NOTES:-
1/ FINISH: HOT DIP GALVANIZED
FRONT ELEVATION
SIDE ELEVATION
SPLICE OF MESH
SECTION
AMATA ABPEL THAILAND
for VOGT POWER INTL INC
GT OUTLET TRANSITION DUCT & EJ
PERSONAL PROTECTION
ASSEMBLY
8790-12-6000
01
A1

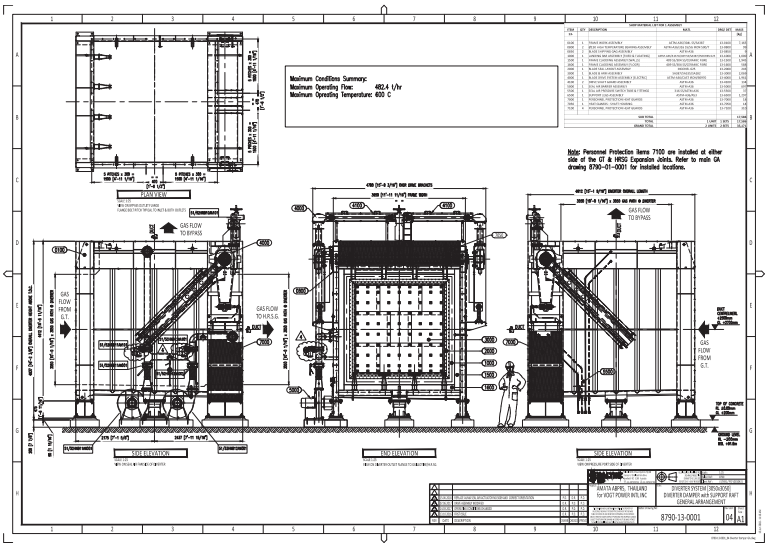
Maximum Conditions Summary:
Maximum Operating Flow: 482.4 t/hr
Maximum Operating Temperature: 600 C
Note: Personnel Protection Items 7100 are installed at either side of the GT & HRSG Expansion Joints. Refer to main GA drawing 8790-01-0001 for installed locations.
FAN VIEW
SIDE ELEVATION
END ELEVATION
SIDE ELEVATION
GAS FLOW TO BYPASS
GAS FLOW FROM G.T.
GAS FLOW TO H.R.S.G.
AMATA ABPRS, THAILAND for VOGT POWER INTL INC
DIVERTER SYSTEM (DISCHARGE) DIVERTER DAMPER with SUPPORT RAFT GENERAL ARRANGEMENT
8790-13-0001
04
A1

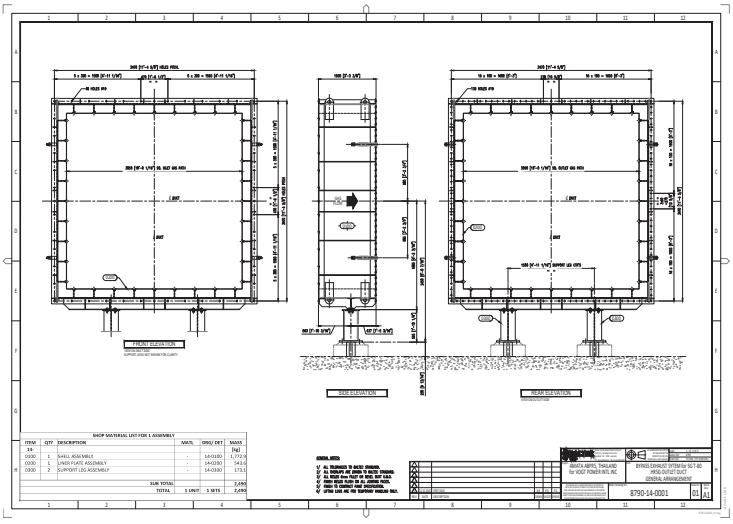
FRONT ELEVATION
SIDE ELEVATION
REAR ELEVATION
SHOP MATERIAL LIST FOR 1 ASSEMBLY
AMATA ABPRS, THAILAND for VOGT POWER INTL INC
BYPASS EXHAUST SYSTEM for SGT-80 HRSG OUTLET DUCT GENERAL ARRANGEMENT
8790-14-0001
01
A1

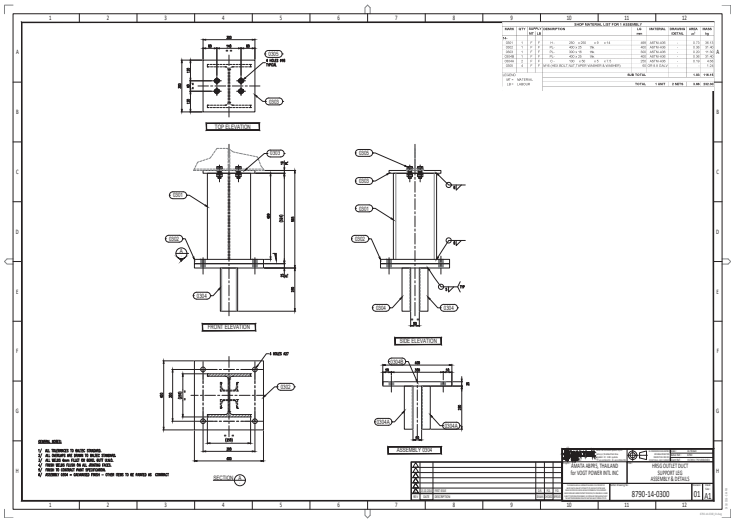
TOP ELEVATION
FRONT ELEVATION
SIDE ELEVATION
ASSEMBLY VIEW
SECTION
AMATA ABPRS, THAILAND for VOGT POWER INTL INC
HRSG OUTLET DUCT SUPPORT LEG ASSEMBLY & DETAILS
8790-14-0300
01
A1

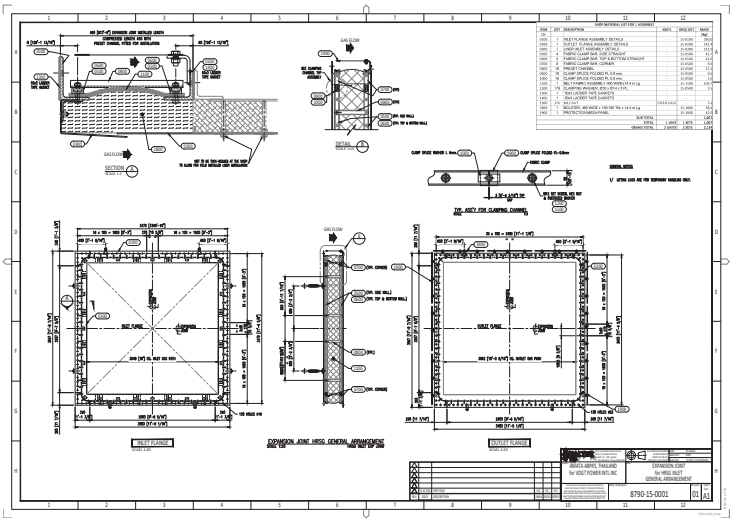
SECTION
DETAIL
TOP ASSY FOR CLAMPING CHANNEL
INLET FLANGE
OUTLET FLANGE
EXPANSION JOINT HRSG GENERAL ARRANGEMENT
AMATA ABPRS, THAILAND for VOGT POWER INTL INC
EXPANSION JOINT for HRSG INLET GENERAL ARRANGEMENT
8790-15-0001
01
A1

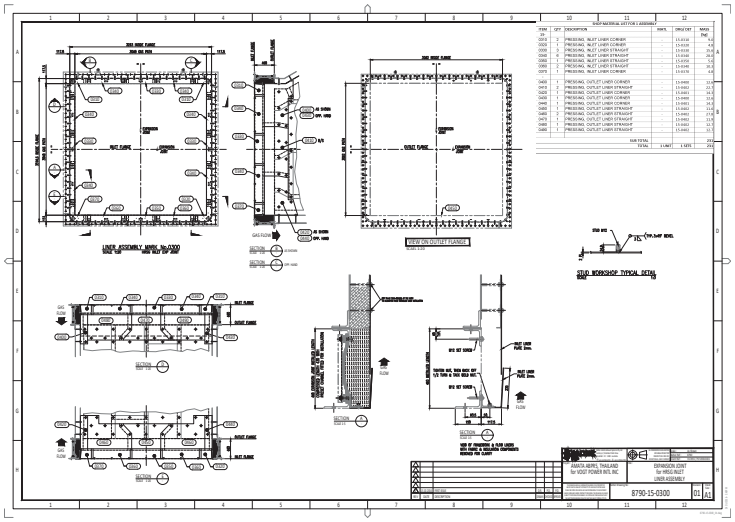
LINER ASSEMBLY MARK: No.0300
VIEW ON OUTLET FLANGE
STUD WORKSHOP TYPICAL DETAIL
SECTION
DETAIL
SHOP MATERIAL LIST FOR 1 ASSEMBLY
ITEM QTY DESCRIPTION MARK DRAG INT MASS (kg)
0100 1 PRESSING, INLET LINER CORNER - 15-0140 4.0
0105 1 PRESSING, INLET LINER CORNER - 15-0130 4.0
0110 1 PRESSING, INLET LINER STRAIGHT - 15-0150 26.0
0115 6 PRESSING, INLET LINER STRAIGHT - 15-0160 26.0
0200 1 PRESSING, INLET LINER STRAIGHT - 15-0170 5.0
0205 1 PRESSING, INLET LINER STRAIGHT - 15-0180 30.0
0375 1 PRESSING, INLET LINER CORNER - 15-0170 4.0
0400 1 PRESSING, OUTLET LINER CORNER - 15-0460 11.0
0410 2 PRESSING, OUTLET LINER STRAIGHT - 15-0460 21.0
0415 2 PRESSING, OUTLET LINER STRAIGHT - 15-0460 21.0
0420 1 PRESSING, OUTLET LINER CORNER - 15-0460 10.0
0440 1 PRESSING, OUTLET LINER CORNER - 15-0461 16.0
0450 1 PRESSING, OUTLET LINER STRAIGHT - 15-0462 11.0
0460 2 PRESSING, OUTLET LINER STRAIGHT - 15-0463 21.0
0465 2 PRESSING, OUTLET LINER STRAIGHT - 15-0464 21.0
0480 1 PRESSING, OUTLET LINER STRAIGHT - 15-0465 11.0
0486 1 PRESSING, OUTLET LINER STRAIGHT - 15-0466 11.0
SUB TOTAL 293
TOTAL 1 UNIT 1 SETS 293
ANAYA ASPHL THAILAND
for VOEST POWER INTL INC
EXPANSION JOINT
for WEIR INLET
LINER ASSEMBLY
8790-15-0300
01
A1

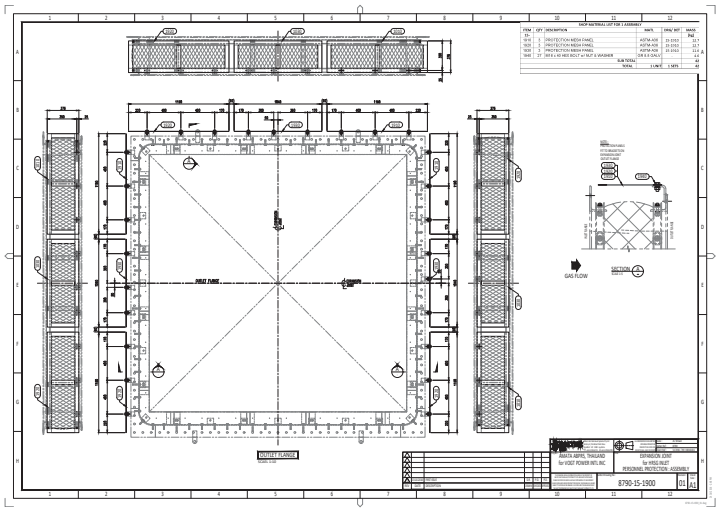
OUTLET FLANGE
GAS FLOW
SHOP MATERIAL LIST FOR 1 ASSEMBLY
ITEM QTY DESCRIPTION MARK DRAG INT MASS (kg)
01 1 PROTECTION MEDIA PANEL - - 11.7
0210 1 PROTECTION MEDIA PANEL - ASTM A36 15-0310 12.7
0215 1 PROTECTION MEDIA PANEL - ASTM A36 15-0320 12.7
0220 1 PROTECTION MEDIA PANEL - ASTM A36 15-0330 12.7
0840 27 M8 x 40 HEX BOLT w/NUT & WASHER - DIN 6.8 (GALV) - 0.7
SUB TOTAL 57
TOTAL 1 UNIT 1 SETS 57
ANAYA ASPHL THAILAND
for VOEST POWER INTL INC
EXPANSION JOINT
for WEIR INLET
PERSONAL PROTECTION ASSEMBLY
8790-15-1900
01
A1

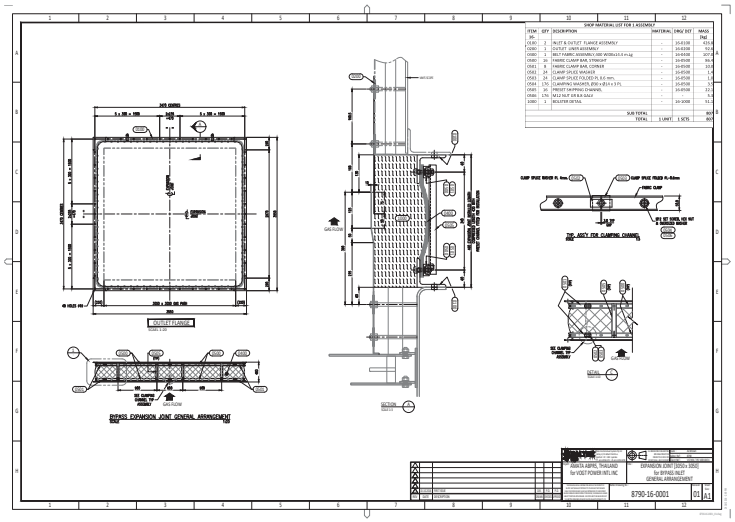
OUTLET FLANGE
EXPANSION JOINT GENERAL ARRANGEMENT
SHOP MATERIAL LIST FOR 1 ASSEMBLY
ITEM QTY DESCRIPTION MATERIAL DRAG INT MASS (kg)
0100 1 INLET & OUTLET FLANGE ASSEMBLY - 16-0100 455.0
0200 1 OUTLET LINER ASSEMBLY - 16-0300 70.0
0300 1 INLET FABRIC ASSEMBLY (WE WORKS 5.5 m sq) - 16-0400 207.0
0400 1 OUTLET FABRIC ASSEMBLY - 16-0500 70.0
0501 8 FABRIC CLAMP BAR, CORNER - 16-0508 3.4
0502 24 CLAMP SPLICE WASHER - 16-0509 1.7
0503 24 CLAMP SPLICE PLATE (PL) 9.0, 6.C. mm. - 16-0510 1.8
0504 176 CLAMPING WASHER, (ENS x Ø13 x 3 P). - 16-0508 3.7
0505 24 FRIEZT SWIPPING CHANNEL - 16-0506 22.2
0506 176 M12 NUT STR & GALV - - 6.2
0300 1 ROUTER DETAIL - 16-3000 51.1
SUB TOTAL 893
TOTAL 1 UNIT 1 SETS 893
ANAYA ASPHL THAILAND
for VOEST POWER INTL INC
EXPANSION JOINT (3500x3 3500)
for BYPASS INLET
GENERAL ARRANGEMENT
8790-16-0001
01
A1

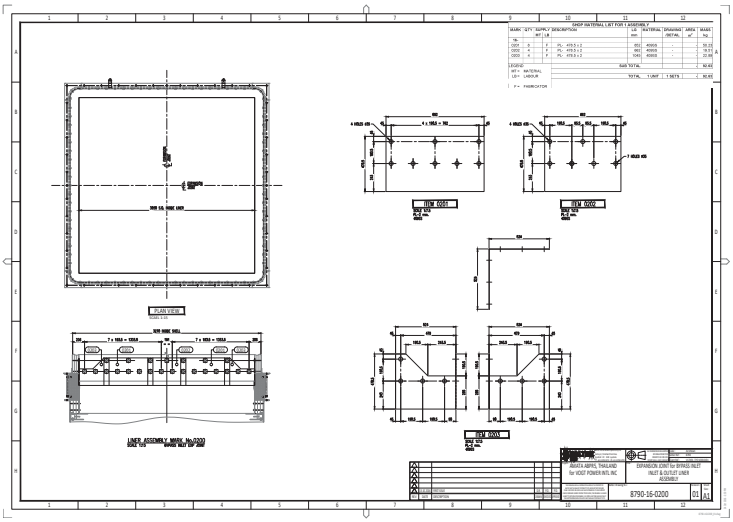
PLAN VIEW
ITEM 0001
ITEM 0002
ITEM 0003
LINER ASSEMBLY MARK: No.0200
SHOP MATERIAL LIST FOR 1 ASSEMBLY
MARK QTY SUPPLY DESCRIPTION LG MATERIAL DRAWING AREA MASS
MT LG mm DWG. NO. (m²) (kg)
0100 8 F PL- 470.0 x 2 - - - 30.10
0200 4 F PL- 470.0 x 2 0G1 40005 - - 19.53
0300 4 F PL- 470.0 x 2 0H1 40005 - - 22.00
0400 4 F PL- 470.0 x 2 0H1 40005 - - 22.00
SUB TOTAL 93.63
MT = MATERIAL
LG = LANDLAP
F = FABRICATOR
TOTAL 1 UNIT 1 SETS 93.63
ANAYA ASPHL THAILAND
for VOEST POWER INTL INC
EXPANSION JOINT for BYPASS INLET
INLET & OUTLET LINER
ASSEMBLY
8790-16-0200
01
A1

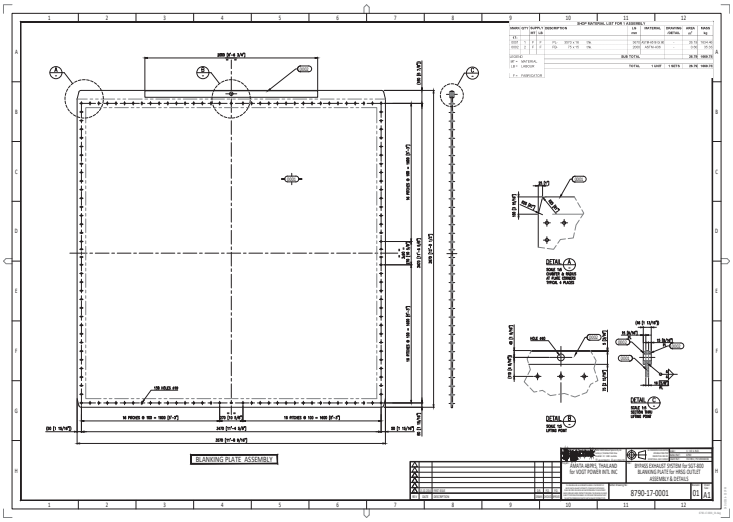

PAINT SPECIFICATION

8790-90-0043
AMATA ABPR5 PROJECT, THAILAND

Surface Preparation

All surfaces to be cleaned of all foreign matter, grease and weld spatter and prepared to SP10-Sa2½.

External Painting – Diverter Damper, GT Transition Duct, HRSG Outlet Duct and Expansion Joints:

Coating Spec: International Interzinc 22 – DFT 50µm or
Jotun Resist 86 (Jotazinc) – DFT 50µm with approval from Baltec

External Coating – Ladders, Platforms, Gratings & Hand Rails (incl. mid rail, kick plates and stanchions)

Coating Spec: Hot-Dip Galvanized

Internal Painting (insulated surfaces where applicable)

Coating Spec: International Interzinc 22 – DFT 50µm or
Jotun Resist 86 (Jotazinc) - DFT 50µm with approval from Baltec

Notes

- Painting to include face of flanges and ID of bolt holes.
- Temporary shipping braces and other temporary items that need to be removed prior to operating the equipment to be painted Bright Yellow.
- Primer coat for all items (where required) to be supplied by fabricator and applied at workshop.
- Intermediate & top coat for all items (where required) to be supplied by others and applied at site.
- One coat of weldable primer (Interplate 11 or similar, 100mm wide strip, 1x20µ) to be applied by fabricator at workshop to all field-welded connections.
- Areas of Stainless Steel 409 that have been subject to welding, grinding or polishing to have a light coat of clear aerosol lacquer applied for temporary surface protection.

Exclusions

Chrome Molly, Stainless steel, galvanised steel (unless specified otherwise), plastic and aluminium surfaces.

Site touch-up

- Not applicable to Baltec's scope for this project.

SGT-800 DIVERTER DAMPER

INSTALLATION AND MAINTENANCE MANUAL

Client ..... Vogt Power International
Client PO No V00L0431
Client Job No. V17491
Site Location ..... Amata City Industrial Estate, Rayong Province, Thailand
Project Description ..... 2-off SGT-800 Bypass Exhaust Systems
Manual Prepared by ..... DH
Baltec File 8790-90-0001
Date ..... January 2018
Revision Level 4

VOGT POWER INTERNATIONAL
For Construction / Fabrication
Issue Date Jun-21-2018

VOGT POWER INTERNATIONAL
V17491-ADXE-501-02
20-Jun-2018

DIVERTER DAMPER INSTALLATION & MAINTENANCE

This publication contains essential information for the assembly, installation and safe, efficient operation of the BALTEC IES Exhaust System.

Carefully read this publication before assembling and installing the exhaust system and review this and any associated documentation before commencing the commissioning procedure.

NOTE:
FAILURE TO COMPLY WITH THESE INSTRUCTIONS COULD, UNDER EXTREME CONDITIONS, CAUSE PREMATURE COMPONENT FAILURE, INVALIDATE THE BALTEC WARRANTY AND MAY RESULT PROPERTY DAMAGE.

WARNING!
NEVER STAND UNDERNEATH A PARTIALLY- OR FULLY-OPEN DIVERTER BLADE UNLESS THE COMPLETE DRIVE SYSTEM IS INSTALLED. IF ACCESS TO THE AREA BENEATH THE DIVERTER BLADE IS NECESSARY (E.G. TO INSPECT LANDING BARS), IT SHOULD ONLY BE DONE WITH THE DRIVE SYSTEM FULLY INSTALLED AND ONLY WITH THE BLADE STATIONARY. FAILURE TO FOLLOW THESE SAFETY GUIDELINES MAY RESULT IN SERIOUS INJURY OR DEATH.

As part of our warranty conditions, a BALTEC IES engineer must supervise the commissioning procedure and any subsequent inspections associated with the installation. BALTEC IES cannot be responsible for rectification costs or waiting time incurred by their representatives as a result of damage or incorrect installation. BALTEC IES engineering representatives are available for assembly, commissioning and maintenance advice by writing to the below address, or by faxing or telephoning:

BALTEC INLET & EXHAUST SYSTEMS PTY LTD
Level 1, 10 FERNTREE PLACE
NOTTING HILL, VICTORIA, 3168
AUSTRALIA

TEL: +61 3 9763 6711
FAX: +61 3 9763 6799

PLEASE QUOTE OUR CONTRACT NUMBER **8790** IN ALL COMMUNICATIONS.

REVISION LOG

Date	Rev	Pages Affected	Revision Description
21 Oct 2016	1	all	First issue to client
05 Jan 2018	2	27	Appendix updated
25 Jan 2018	3	27	Appendix updated
16 Jun 2018	4	27	Appendix updated

TABLE OF CONTENTS

TABLE OF CONTENTS **4**
FOREWORD **5**
1 INTRODUCTION **6**
2 DESIGN DATA & PERFORMANCE **7**
3 PROPRIETARY COMPONENT SPECIFICATION **9**
4 WATER DRAINAGE SYSTEM **11**
5 RECEIVAL AND UNLOADING **12**
5.1 Receiving Inspection 12
5.2 Unloading at site 12
5.3 Lifting Precautions 12
5.4 Equipment Storage 12
6 INSTALLATION OF THE DIVERTER **13**
6.1 Foundations 13
6.2 Diverter & Drive System 14
6.3 Seal Air system & Instrumentation 15
6.4 Local Control Panel & Electrical Wiring 17
7 MAINTENANCE OF THE DIVERTER **18**
7.1 Maintenance and Inspection intervals 18
7.2 Lubrication 19
7.3 Periodic Testing 19
7.4 Blade Seal Element Replacement 19
7.5 Shaft Seals 21
7.6 High Temperature Bearing Replacement 23
7.7 Position Transmitter and Limit Switches 24
APPENDIX A **27**

FOREWORD

The purpose of this Manual

The aim of this manual is to help the end user gain a greater understanding of the BALTEC IES Exhaust System and Diverter Damper by detailing adequate procedures for the installation and maintenance of the equipment supplied.

The Arrangement of the Manual

The manual is divided into sections, or chapters, each covering logical sub-divisions. The chapters are numbered with single figures, e.g. 1, 2, 3, etc, and may also be divided into sub-sections with decimal numbers following on from the section they are in, e.g. 1.1, 1.2, 1.3 etc.

Whilst every care is taken to ensure that the information in the manual is correct, no liability can be accepted by the authors for loss, damage or injury caused by errors in, or omissions from the information given.

Component manufacturers continually make changes to specifications and recommendations, and these, when notified, are incorporated into our manuals at the earliest opportunity.

1 INTRODUCTION

The BALTEC IES Diverter Damper is essentially a valve with one inlet and two outlets. It is arranged so that it directs the gas flow from its inlet to either or both of its outlets. It cannot close off both outlets simultaneously.

The BALTEC IES Diverter Damper comprises a flanged and braced box (commonly referred to as the plenum chamber) which is fully insulated internally with ceramic fibre. Contained within the plenum is an insulated blade assembly containing two pairs of sealing elements around its perimeter; one pair to provide a seal on the HRSG side, the other to provide a seal on the Bypass side. The Blade assembly incorporates a pivot shaft on which it rotates through a 90-degree arc, and the drive system is of the direct-drive type, where torque is applied directly to the blade pivot shaft ends.

The torque required to move the diverter blade is supplied by a single centrally-mounted electric actuator. The actuator is coupled with splined drive shafts to two right angle bevel gearboxes, and these in turn drive worm gearboxes which are connected directly to the diverter blade pivot shaft.

A local control panel, providing all the features necessary to control the diverter blade locally and remotely, is mounted close to the diverter on a mounting skid / rain canopy. The electric actuator is fully self-contained and interfaces directly with the local control panel. In addition to the drive motor, it also contains the necessary limit switches, torque switches and a 4-20mA position transmitter.

A Seal Air Fan assembly, operating through interconnecting pipe work, supplies air to the interspace between the two rows of blade seals at a pressure above that of the operating pressure within the duct. This ensures that any leakage is into the duct, not out from it, thus providing 100% isolation. There are two fans provided, one duty fan and one standby fan, to ensure that the system will remain operational even in the unlikely event a fan failure.

NOTE: For this project, the seal air fan motors are directly controlled by the client's MCC/DCS.

2 DESIGN DATA & PERFORMANCE

TURBINE TYPE.....Siemens SGT-800

BALTEC UNIT TYPE ..... Exhaust System with Diverter Damper

DIVERTER DRIVE TYPE .....Electric, Pivot-Drive

ACTUATOR MOTOR SIZE 4kW

ATTITUDE OF SYSTEM (DIVERTER) .....Horizontal, 90° to GT outlet duct

ATTITUDE OF SYSTEM (STACK – supplied by others) .....Vertical, upwards gas path

NOMINAL GAS FLOW ..... 131 kg/sec @ ISO conditions

OPERATING TEMPERATURE ..... 563°C @ ISO conditions

SEALING SYSTEM ..... Duplex Blade Seals with Seal Air Barrier

SEAL AIR FAN MOTOR SIZE..... 11 kW

SEAL AIR SYSTEM MINIMUM SAFE PRESSURE .....2.5mbar / 25 mm H_2O

SEALING EFFICIENCY.....100% (with Seal Air System running)

DIVERTER OPENING TIME .....60 sec nominal#

DIVERTER CLOSING TIME .....60 sec nominal#

EMERGENCY CLOSING TIME.....40 sec nominal#

These values are nominal and may vary slightly from the figures shown

For details of approximate gas flow to HRSG vs. blade position, refer to Table 1 on the following page. This data is preliminary only, based on typical HRSG flow vs back-pressure behaviour.

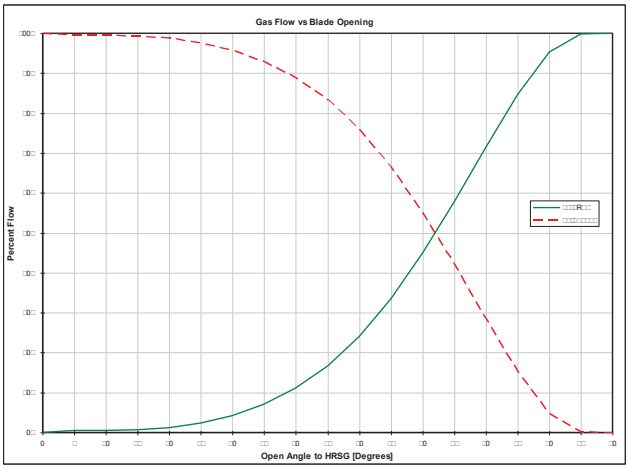

Table 1. Percent gas flow to HRSG (and Bypass) vs. blade open angle

3 PROPRIETARY COMPONENT SPECIFICATION

The following is a list of the major components fitted to the Diverter unit. The suppliers will be as listed, or equivalent. Quantities listed are per Diverter:

High Temperature Bearings for pivot shaft:

MANUFACTURER	:	Baltec Design – CBC manufacture
TYPE	:	150mm diameter
QUANTITY SUPPLIED	:	2

Blade Seals:

MANUFACTURER	:	Baltec Design & manufacture
TYPE	:	Inconel 625, laser-cut and pressed
QUANTITY SUPPLIED	:	1 set

Shaft Seals:

MANUFACTURER	:	Baltec Design & manufacture
TYPE	:	Graphite / 316SS sandwich construction 150mm internal diameter
QUANTITY SUPPLIED	:	2

Electric Actuator:

MANUFACTURER	:	Auma
TYPE	:	SA14.6 with space heater 400V 50Hz 3-phase, 4.0kW, 125rpm
QUANTITY SUPPLIED	:	1

Drive Shafts:

MANUFACTURER	:	Indrotech
TYPE	:	1550-series with 1500 SAE flanges
QUANTITY SUPPLIED	:	2

Bevel Gearboxes:

MANUFACTURER	:	Auma
TYPE	:	GK25.2 Ratio 8:1
QUANTITY SUPPLIED	:	2

Worm Gearboxes:

MANUFACTURER	:	Auma
TYPE	:	GSD250.3 Version RR + LR, ratio 52:1
QUANTITY SUPPLIED	:	2

Seal Air Fans:

MANUFACTURER	:	Halifax
TYPE	:	No. 24.5 Mercury Backward Inclined Fans with Inlet Silencers, 3000m³/hr @ 6kPa
MOTOR TYPE	:	WEG 11kW, TEFC
QUANTITY SUPPLIED	:	2

Quarter-turn Seal Air Actuator:

MANUFACTURER	:	Auma
TYPE	:	SQ05.2/AM01.1 220-240V 50Hz 1-phase, 16sec open/close
QUANTITIY SUPPLIED	:	2

4 WATER DRAINAGE SYSTEM

Water that may collect in the floor of the Diverter during long periods of shut down can be drained via a 50NB ball valve located underneath and in the centre of the Diverter. It is recommended that the drain valve is plumbed directly into the customer's water drain line. Alternatively, water from the valve can be allowed to drain directly onto the ground underneath the Diverter. Note that the 50NB valves are supplied separately and should be fitted at site in place of the pre-fitted hex plugs as part of the installation process.

Similarly, there are four 50NB sockets located at the top of the Diverter (two at each side) to allow water that accumulates on the Diverter Blade to be drained, in the case of the Diverter Blade being left in the horizontal position (closed to bypass stack) during long periods of shutdown. Again, it is recommended that these sockets are plumbed into the customer's drain line. Alternatively, water from the sockets can be allowed to drain directly onto the ground underneath by removing the hex plugs.

IMPORTANT SAFETY NOTE IF THE DRAIN SOCKETS ARE NOT PLUMBED TO CUSTOMER'S DRAIN: To avoid the possibility of hot gases escaping from the drain points during operation of the Diverter, the valves and/or hex plug(s) must only be opened/removed when the gas turbine is shut down. Always ensure the drain valve in the floor is fully closed and the hex plugs for the blade drain are installed and fully tightened before restarting the turbine. Failure to observe this warning could result in serious injury to the operator.

For this project, there is a similar water drainage system in the floor of the GT Transition Duct.

5 RECEIVAL AND UNLOADING

5.1 Receiving Inspection
Upon delivery to site, a thorough inspection of the equipment should be carried out and any damage or missing components advised to Baltec.

5.2 Unloading at site
The unit is likely to be lifted from a low loader when it arrives at site. The Diverter Blade will be pre-assembled into the frame in the workshop prior to delivery and will be secured in position inside the frame by two shipping gags. These gags are painted yellow and must be removed prior to commissioning/operation of the Diverter Damper.

The worm gearboxes (at either side of the Diverter) will also be pre-assembled to the Diverter, however other drive system components, including the actuator, drive shafts and bevel gearboxes will typically be delivered separately and will need to be installed to the Diverter Damper (see 6.2.5).

The Diverter components should be unloaded and placed on level timber blocks to raise them clear of the ground until ready for installation, preferably close to the area where final assembly will take place. Items such as actuators, gearboxes, fans, and valves should be stored in an indoor area until ready for installation.

5.3 Lifting Precautions
Refer to the following drawing in Appendix A when lifting the Diverter Damper:

8790-05-0100 – Diverter Lifting Points

Please note the following important points when lifting the Diverter Damper off the truck or into position on site:

- No special spreader bars or lifting frames are required
- Four lifting lugs are provided at the top of the damper, with 60m diameter holes for the shackle pins, as shown on drawing 8790-05-0100.
- Minimum rigging angle is 60 degrees to the horizontal (maximum 30 degrees to vertical).

Please consult Baltec if any additional information is required regarding lifting of equipment.

5.4 Equipment Storage
If equipment is to be stored for more than several weeks prior to installation, it is recommended that the Seal Air Fans are stored indoors and that the impellers are periodically rotated by hand to prevent the possibility of damage to the motor bearings from remaining loaded in a static position. See also Section 3.3 in the Bypass Exhaust System Installation & Maintenance Manual (8790-90-0002) for general equipment storage notes.

6 INSTALLATION OF THE DIVERTER

6.1 Foundations

Check that the foundations have been prepared in accordance with approved drawings:

8790-01-0002 – Foundation Layout and Loads
8790-01-0004 – Anchor Details [D1-D5]: Diverter Damper
8790-13-0001 – Diverter Damper General Arrangement showing RL

8790-13-6500 – Diverter Damper Support Leg Details

Note: It is highly recommended that the erection contractor checks the latest revisions of the above drawings, as well as any other drawing in this manual with Baltec at the time of erection.

It is recommended that the foundations for the Seal Air Fans are constructed either with an embedded drain pipe under the fan base, or with a small channel in the concrete to allow water run-off from under the fan. Please consult Baltec if further details are required

6.2 Diverter & Drive System

Refer to the following drawings in Appendix A when assembling the Diverter & Drive System:

8790-13-1500 – Diverter Cladding (walls)
8790-13-1600 – Diverter Cladding (floor)
8790-13-4000 – Drive System General Arrangement
8790-13-4100 – Drive Shaft Guard Assembly
8790-13-4600 – Drive System Mechanical Locking
8790-13-7000 – Diverter Personnel Protection (sides)
8790-13-7050 – Diverter Personnel Protection (top)

6.2.1 Install the Support Legs into position and secure to the foundations with the nuts provided. Do not fully tension the nuts at this stage. Refer to drawing 8790-13-6500 for details.

6.2.2 Lift the Diverter into position onto the Support Legs.

6.2.3 Check RLs and alignment of the Diverter ducting flanges, vertically as well as horizontally, before tightening the bolts securing it to the Support Legs. If necessary, adjust vertically with the shims provided.

6.2.4 After the GT Transition Duct and HRSG Outlet Duct are installed and connected to the Diverter (for full procedure, refer to Exhaust System Installation & Maintenance Manual 8790-90-0002), fully tension the foundation anchorage nuts and grout the footings using a suitable non-shrink grout with minimum compressive strength of 350 kg/cm^2 (35 MPa)

6.2.5 Install the drive system components including bevel gearboxes, electric actuator, blade locking device and drive shafts according to drawing nos. 8790-13-4000 & 8790-13-4600 in Appendix A. Consult Baltec if any additional information is required.

NOTE: During assembly, inspect the actuator and bevel gearbox shafts to which the drive shaft couplings are installed to ensure grub screw dimples have been made according to the note on the drive system drawing (temporarily remove the couplings from the shafts if necessary to perform this inspection). Tighten all drive system grub screws securely using Loctite thread-locking compound or similar.

6.2.6 Refer to the drive system drawing for any welds that need to be applied at site, for example between the torque reaction brackets and the damper frame.

6.2.7 Install the drive shaft guards as shown on drawing 8790-13-4100.

6.2.8 Install the personnel protection panels as per drawings 8790-13-7000 & 7050.

6.2.9 Prior to commissioning, remove the shipping bolts & gags retaining the Diverter Blade in the vertical position (gags are painted yellow for easy identification). Failure to remove the shipping gags may result in drive system damage if it is attempted to move the diverter blade with them still installed.

6.2.10 If desired, remove the hex plugs at the water drain points and replace with the provided stainless steel ball valves. These may then be plumbed to the water drain line as noted in Section 4.

NOTE: Tighten all foundation bolts snug tight

6.3 Seal Air system & Instrumentation

Refer to the following drawings in Appendix A when assembling the Seal Air System:
8790-13-5000 – Seal Air System General Arrangement
8790-13-5500 – Seal Air System Instrument Tubing

6.3.1 If not done prior to delivery, assemble the seal air pipes (items 5001 & 5002) onto the diverter as shown in the Seal Air System GA drawing. Install the supplied high-temperature gaskets between the flanges on the diverter shell and the pipe flanges. Do not fully tension the bolts until all pipework is installed.

6.3.2 Install the header pipe (item 5003) and the two motor-operated butterfly valves (MOVs, item 5009) as shown on the drawing. No gaskets are necessary as the valve faces are self-sealing.

6.3.3 Install the two manual butterfly valves (item 5010) and custom flanges (item 5004) to the header pipe. Again, no gaskets are necessary for these valves.

6.3.4 Manually operate all valves to check that the vanes do not catch on the inside of the pipe work and adjust their positions if necessary before fully tensioning the bolts.

6.3.5 Place gasket tape or Silastic sealant between the check valves (item 5007) and discharge flanges of the seal air fans (item 5008) and bolt together (if not already done prior to delivery).

6.3.6 Position the fans (5008) under the pipework such that the check valve outlets align with the manual butterfly valves / custom flanges above, and check the location / orientation against the Seal Air System drawing. Mark the concrete through the mounting holes and drill for masonry anchors. Temporarily move the fans while the masonry anchors are being installed.

6.3.7 **IMPORTANT!** Place the fans in position with additional nuts and flat washers fitted underneath the fan base, so that the fan is level and there is room for approximately 30mm of grout between the fan base and the concrete. Install nuts and flat washers to the top of the fan base and fully tighten. Perform a final check that the fan is level in all axes and grout the foundations using a non-shrink grout. Ensure there is a clear path for water to drain from under the base of the fan.

NOTE: Improperly levelled fans can result in vibration problems.

6.3.8 Cut to length and install the flexible hose (item 5011) between the check valves and the pipework using the hose clamps provided (item 5012). Ensure the hose is not too long, as this could lead to swelling during operation & possible degradation in seal air system performance. Silastic or similar sealant may be used on each hose connection to ensure an airtight fit.

6.3.9 Install the fan discharge pressure gauge (item 5015) to the as shown on the drawing. The gauge is supplied with a pulsation damper that must be installed between the fitting and the gauge to prevent needle fluctuations that may otherwise shorten the gauge life.

6.3.10 Install the instrument tubing & associated parts according to drawing: 8790-13-5500. Where lengths of tubing need to be connected together, use compression unions. Take care to hold all compression fittings securely when tightening to avoid rotation. For this project there are differential pressure transmitters installed inside the local control panel for interface to the PLC system (see next section) as well as local differential pressure gauges.

NOTES:
- If the fan is to be stored for long periods of time without operating, the fan must be manually rotated every 2 weeks
- Fans should be stored indoors until ready for installation
- Foundations should be checked to ensure provision has been made for water drainage, in accordance with the foundation drawing
- Once the fans are installed, terminal box gaskets and cable glands must be installed properly to avoid water ingress

6.4 Local Control Panel & Electrical Wiring

Refer to the following drawings/documents in Appendix A when installing Local Control Panel & Electrical Wiring:
8790-85-0009 – DCS I/O Summary
8790-85-0020 – Field Wiring (Power)
8790-85-0021 – Field Wiring (Control)
8790-85-1001 – Local Control Panel External Layout
8790-85-1002 – Local Control Panel Internal Layout
8790-85-0500 – Local Control Panel Mounting Skid / Rain Canopy
8790-85+ – Diverter Damper Electrical and P&ID Drawings

6.4.1 The Local Control Panel should be mounted to the supplied mounting skid / rain canopy, which should preferably be located on the Seal Air System side of the Diverter, as close as practical to the Drive System (to minimise wiring lengths). Affix the Control Panel Skid to the concrete with masonry anchors, and then bolt the Control Panel into position on the skid. The conduits & cables for incoming power feeders and power/control for the Diverter ancillary items should be terminated as close as possible to the base of the Control Panel skid.

NOTE: Electrical cables, conduit and/or cable tray is to be supplied by the client for site installation. Materials and installation method are at the discretion of the DCS supplier and/or site electrical contractor, providing the cables meet the minimum specifications set out on the field wiring diagrams.

6.4.2 In accordance with the field wiring diagrams in appendix A, run interconnecting wiring from terminal blocks in the bottom of the control panel and out through the gland plate via conduit or cable try to:

- Drive system actuator motor & heater
- Drive system actuator limit switches, torque switches and position transmitter
- Seal air valve actuators

NOTE: For this project, the seal air fan motors are powered directly from the client's MCC.

6.4.3 Connect signal wiring for control & feedback signals to/from the client's central control room (DCS) to the terminal blocks specified in drawings 8790-85-0009, using the wire numbering system provided by the client.

NOTE: DCS signal cables can only be connected once the DCS is ready for interfacing to the Diverter Damper. It is therefore acceptable to leave this wiring disconnected until such time. The diverter can be operated in "local" mode until this wiring is completed.

6.4.4 Connect the incoming 400V 50Hz 3-phase power supply and 230V 50Hz 1-phase UPS supply to the terminal blocks inside the control panel. Be sure to also connect the Earth cable. Once all field wiring has been completed and checked thoroughly by Baltec's Site Engineer, switch on the 3-phase and 1-phase UPS supplies at the MCC/DCS.

6.4.5 Jog each fan momentarily to check rotational direction. Correct if necessary by swapping any two phases, preferably at the equipment end of the cable.

IMPORTANT: Perform a final inspection and ensure that all the electrical cables are connected as per the Field Wiring drawings and located where they cannot be damaged by heat or abrasion. Also check that all wiring is in accordance with the local regulatory standards and project site requirements. Refer to document no. 8790-90-0104 in Appendix A for the full Commissioning Procedure & consult Baltec if any further information is required.

7 MAINTENANCE OF THE DIVERTER

7.1 Maintenance and Inspection intervals

The recommended maintenance intervals shown here are the minimum necessary to ensure satisfactory long-term operation of the Diverter. However at the discretion of the Site Engineer, it may be necessary to alter the maintenance intervals as dictated by local conditions and the expected operating cycle of the Diverter. Provided that all maintenance is ultimately carried out, the intervals may be varied by plus or minus 20% without detriment.

Recommended scheduled inspection / maintenance operations are as follows:

Item	Detail	Frequency
Diverter Drive System components, including Actuator, Drive Shafts & Gearboxes	Check for any signs of damage or lubricant leakage	Every 6 months
Diverter Pivot Shaft Bearings	Check for any signs of wear of damage	Every 6 months
Diverter Pivot Shaft Seals	Check for any signs of wear of damage, evidence of Exhaust Gas leakage (e.g. burnt paint) or signs that the Shaft is not passing centrally though the Seal	Every 6 months
Seal Air Fans	Check for any abnormal noises or vibration	Monthly
Seal Air MOVs	Check for correct operation	Every 3 months
Instrument Tubing Drains	Remove the drain caps from each tubing run to allow any condensate to drain out (4 places)	Every 3 months
Diverter Blade Seals	Check for any signs of wear of damage, or for loose seal elements (requires internal access to the Diverter Duct)	Any periods of Gas Turbine shutdown, or at least every 12 months
Diverter Water Drainage	Open water drain valve and/or remove hex plugs from blade drain points to allow accumulated water to drain out	Every week during long shutdown periods
Diverter Seal Air Pressure	Check actual pressure displayed on local control system HMI or local dP gauges to ensure minimum safe pressure is achieved, or monitor alarm signal sent to DCS.	Daily during periods of GT Operation if Diverter is fully open or fully closed

Note: Damage to a Shaft Seal, or any sign that the Pivot Shaft is not passing centrally through the Seal, may indicate that the Bearings are worn and require repair or replacement (see section 7.5).

7.2 Lubrication

Details of recommended lubrication intervals are given in the following document:

8790-90-0060 – Lubrication Schedule

Ensure that any lubricants used are free from water, dirt or other contaminants, and keep in mind that adverse operating conditions may necessitate lubricant changes at more frequent intervals than specified.

If the existing lubricant of a component is contaminated, flush with a suitable commercial degreasing or cleaning agent and then fill with fresh lubricant of the appropriate type.

NOTE: BALTEC high temperature bearings fitted to the pivot shaft are self-cleaning and self-lubricating. Lubrication is not required and could in fact be detrimental to bearing life.

7.3 Periodic Testing

If the Diverter is anticipated to remain in a static position for an extended period of time, it is desirable to operate the Diverter through its complete operating cycle at least every three (3) months. Although the unit is designed to remain in a static position for extended periods, an occasional system test will ensure that the Diverter is functioning correctly and is ready for operation when needed.

Similarly, during long periods of shutdown ensure that each Seal Air Fan is run for a few minutes once per week. This will prevent the possibility of damage to the Fan Motor bearings from the static weight of the impeller.

7.4 Blade Seal Element Replacement

Bolted to the periphery of the blade, the Baltec sealing elements are designed to provide a mechanical seal between the edge of the blade and the landing bars. Under normal conditions, the sealing elements will give a long, trouble-free life, however it is important to inspect them at regular intervals for damage or wear. Individual seals can easily be replaced, and replacement elements and fasteners are available from Baltec IES. Refer to the following drawings in Appendix A for locations and layout of the Diverter Blade Seals, and details of the Diverter Mechanical Locking:

8790-13-2000 – Blade Seal Layout
8790-13-4600 – Drive System Mechanical Locking

Prior to commencing any works, it is recommended to become familiar with the seal element layout on drawing 8790-13-2000. For identification purposes seal elements are coded according to the drawing item numbers to indicate the seal type, span, material specification, effective length of the seal and its construction.

WARNINGS: When replacing seal elements, it is necessary for personnel to enter the duct and work in the vicinity of the partially open diverter blade. Prior to opening the access hatch, ensure that the gas turbine is not operating, and that sufficient time has been allowed for the duct to cool (at least 24 hours is recommended). Always test the atmosphere inside the duct for oxygen levels and presence of poisonous or explosive gases before personnel enter the diverter damper. Install the Mechanical Locking Pin to prevent inadvertent operation and be sure to wear protective gloves when handling seal elements to protect against the extremely sharp edges.

7.4.1 Blade Seal Removal Procedure:

It is possible to replace an individual seal element in the centre of the row without disturbing adjacent seal, but since the elements overlap it is normally necessary to loosen these adjacent elements. The seal removal procedure is as follows:

7.4.1.1 Ensure that necessary access permits have been authorised.

7.4.1.2 Move the Diverter Blade to approximately the 50% open position.

7.4.1.3 Isolate the power at the Local Control Panel by turning off the main 3-phase Isolator and install the Diverter Mechanical Locking Pin (see drawing 8790-13-4600).

7.4.1.4 Ensure the atmosphere in the diverter is safe to work in, and that there is adequate ventilation.

7.4.1.5 Enter the duct, loosen the adjacent elements if necessary and remove the damaged seal(s).

7.4.2 Blade Seal Installation Procedure:

When fitting new seal elements it is important that the arrangement on the seal layout drawing is followed exactly. Ensure that each seal element is mounted in its correct position by comparing part numbers and dimensions with those on the drawing. Whilst many seal elements appear to be similar there are frequently subtle differences between them depending on their position on the blade. The seal installation procedure is as follows:

7.4.2.1 Having removed the damaged seal, position the new seal element according to the seal layout drawing and secure loosely with new mounting bolts & nuts.

7.4.2.2 Take care to set the overlaps between the new seal element and adjacent seals according to the layout drawing.

7.4.2.3 Set outer edges of seals level and firmly tension the mounting bolts.

IMPORTANT: Even if the seal mounting bolts have only been loosened, always replace them with new bolts and high-temperature stainless steel self-locking nuts, available from Baltec. When fitting seal elements, do not use excessive force or over-tighten the mounting bolts, as this may distort the elements and lead to ineffective sealing and/or premature seal failure.

Following replacement of any seal elements and prior to closing up the access hatch, perform a final inspection to ensure all seals are correctly aligned and securely fastened. Remove all tools and equipment from the Diverter Duct, remove the Mechanical Locking Pin and turn on the main 3-phase Isolator. Move the Diverter to both extremities (fully open and fully closed) and check that the seal elements seat correctly against the landing bars.

7.5 Shaft Seals

Fitted around the pivot shaft on each side of the Diverter, the primary function of the shaft seals is to prevent hot gas leakage to the atmosphere. Their secondary function is as a protective heat barrier for the bearings. Refer to the following drawing for details:

8790-13-0760 – Pivot Shaft Seal Assembly
8790-13-4600 – Drive System Mechanical Locking

WARNING: While shaft seal inspection and replacement is performed externally to the diverter, it must only be done when the turbine is shut down, otherwise injury and/or damage from escaping hot exhaust gas may result.

7.5.1 Shaft Seal Inspection Procedure

7.5.1.1 Ensure that necessary access permits have been authorised.

7.5.1.2 Move the Diverter Blade to approximately the 1% open position (just enough to ensure the blade seals are not compressed).

7.5.1.3 Isolate the power at the Local Control Panel by turning off the main 3-phase Isolator and install the Diverter Mechanical Locking Pin (see drawing 8790-13-4600).

7.5.1.4 Remove the securing nuts, set screws and washers from the front plate of the shaft seal housing. Inspect the condition of these fasteners to determine if they can be reused when re-assembling the shaft seal.

7.5.1.5 Separate the front plate from the rear flange and slide the front plate as far as possible along the shaft to enable access to the shaft seal components.

7.5.1.6 Using a screwdriver or hook bent from a piece of wire carefully separate the seal components and slide them outwards on the shaft.

7.5.1.7 Examine the seal components for damage, distortion or wear, including the fiberglass rope packing in the housing. If the graphite spacers & stainless steel shims are sound, re-install the components and front plate, using new fiberglass rope packing if required. Otherwise continue to replace the shaft seal components as set out in the following section.

7.5.2 Shaft Seal Replacement Procedure

7.5.2.1 Disassemble the Shaft Seal as described in section 7.5.1.

7.5.2.2 Remove the Worm Gearbox and Pivot Bearing, referring to section 7.6.

7.5.2.3 Remove the spacers and diaphragms from the shaft and discard. It will be necessary move these items as far as possible along the stub shaft, and then attach a second sling behind them to support the blade. Next, remove the sling in front of them so they can be slid off the shaft. Alternatively, if it

is certain that these components will not be re-used they may simply be cut in half and removed from the shaft.

7.5.2.4 Remove the fiberglass rope packing and clean any debris from the seal housing and shaft.

7.5.2.5 Fit the replacement graphite spacers and stainless steel diaphragms on the shaft, following the sequence shown in drawing 8790-13-0760. This is the reverse of the removal procedure, i.e. slide the seal components and front cover as far as possible onto the stub shaft, and then attach a sling behind items to support the blade and remove the sling in front of them.

7.5.2.6 Install new fiberglass rope packing according to the drawing, ensuring the ends of each piece are butted closely together and staggered 180 degrees between pieces.

7.5.2.7 Slide the replacement shaft seal components into the seal housing, slide the seal cover over the seal mounting plate studs and fit the nuts, set screws and washers and tension firmly.

7.5.2.8 Replace the pivot bearing following the sequence set out in 7.6 and re-fit the worm gearbox/torque arm assembly.

7.6 High Temperature Bearing Replacement

The Baltec high temperature bearings fitted to the pivot shaft are self-cleaning, self-lubricating and virtually maintenance free. They are designed to give a long, trouble free life under normal conditions. If the bearing is worn or damaged, however, it will be necessary to remove the bearing assembly and replace it with a new bearing unit.

WARNING: While bearing replacement is performed externally to the diverter, it must only be done when the turbine is shut down, otherwise injury and/or damage from escaping hot exhaust gas may result.

7.6.1 Bearing Removal Procedure

7.6.1.1 Ensure that necessary access permits have been authorised.

7.6.1.2 Move the Diverter Blade to approximately the 1% open position (just enough to ensure the blade seals are not compressed).

7.6.1.3 Isolate the power at the Local Control Panel by turning off the main 3-phase Isolator and install the Diverter Mechanical Locking Pin (see drawing 8790-130-4600).

7.6.1.4 Remove the worm gearbox from the stub shaft at the same side as the bearing being replaced. The outer cover plate, snap ring and inner retention plate at the end of the stub shaft will first need to be removed, and the torque arm rod end bearing will need to be disconnected from the damper frame. Then the gearbox and torque arm assembly can be supported from a crane from overhead and carefully slid off the end of the stub shaft using hydraulic jacks or similar.

7.6.1.5 Using a soft sling and overhead crane, support the end of the stub shaft at the same side as the bearing being removed.

7.6.1.6 Remove the Shaft Seal components as described in section 7.5.and slide them slightly outwards along the shaft to prevent them being damaged should they still be in good condition.

7.6.1.7 Remove the Pivot Bearing attachment bolts and nuts and slide the bearing as far as possible along the stub shaft, and then attach a second sling behind the bearing to support the blade. Next, remove the sling in front so the bearing can be removed from the end of the stub shaft.

7.6.2 Bearing Replacement Procedure

The procedure for re-installing the new bearing is a reverse of the procedure set out in 7.6.1, with attention to the following:

7.6.2.1 If new Shat Seal components are being installed, they should be slid onto the shaft before the bearing. Fit new bearing mounting bolts & nuts and tension firmly.

7.6.2.2 Re-install the Shaft Seal components to the Shaft Seal housing as described in section 7.5.

7.6.2.3 Remove all tools, etc from the duct, remove the mechanical locking pin and turn the main 3-phase isolator on. Move the diverter through one complete cycle (from closed to HRSG to fully open to closed again) and ensure the bearings are functioning correctly with no obvious noises or vibrations.

7.7 Position Transmitter and Limit Switches

The Baltec Diverter Damper utilises a 4-20mA position transmitter and limit switch assembly built into the electric actuator. The limit switches are used for both end-positioning and fully open / fully closed indication, whilst the position transmitter is used for remote indication of the Diverter Blade position between 0-100%. The actuator is protected from mechanical overloads by internal torque switches.

When the diverter blade is in the "fully closed to HRSG" (vertical) position, the position transmitter output is 4mA (indicating 0% open to the DCS). When the diverter is in the "fully open to HRSG" (horizontal) position the position transmitter output is 20mA (indicating 100% open to the DCS).

Note that the limit switches, position transmitter and torque switches are adjusted as part of the commissioning procedure and should require no further adjustment unless some part of the drive system has been disturbed for maintenance or inspection. For adjustment procedures, refer to the following sections.

7.7.1 Limit Switch Adjustment Procedure

Limit Switch adjustment is carried out at the Auma actuator. Prior to adjustments, remove the limit switch compartment cover and mechanical position indicator disc. The adjustment procedure is as follows, referring to Figure 1 on the following page for switch locations:

7.7.1.1 Move the Diverter Blade to the "fully closed to HRSG" (0%) position, using the hand wheel if necessary for final positioning. The blade stops should be just contacting the blade. Wind the hand wheel back 5 turns in the opening direction.

7.7.1.2 Set the Closed Position Limit Switch by turning the screw marked "WSR" (see "A" in Figure 1). The screw is spring-loaded and needs to be pressed down with the screwdriver prior to turning. Ratcheting clicks will be heard as the screw is turned, and the pointer "B" will be observed to rotate 90o at a time. As soon as the pointer aligns with the mark "C" adjacent the "WSR" switch, stop turning immediately and release the pressure from the screw. Turn the hand wheel a further two turns in the opening direction and similarly turn the screw marked "WDR" (see "G" in Figure 1) until the pointer "H" aligns with mark "C".

7.7.1.3 Move the Diverter Blade to the "fully open to HRSG" (100%) position, using the hand wheel if necessary for final positioning. The blade stops should be just contacting the blade. Wind the hand wheel back 5 turns in the closing direction.

7.7.1.4 Set the Open Limit Switch by turning the screw marked "WOL" ("'D" in Figure 1) and stopping when the pointer "E" aligns with the mark "F". Turn the hand wheel a further two turns in the closing direction and similarly turn the screw marked "WDL" (see "K" in Figure 1) until the pointer "L" aligns with mark "F".

7.7.1.5 Cycle the Diverter several times and check end positioning.

NOTE: It is often an indication that end positioning is incorrect if seal air pressure cannot be achieved.

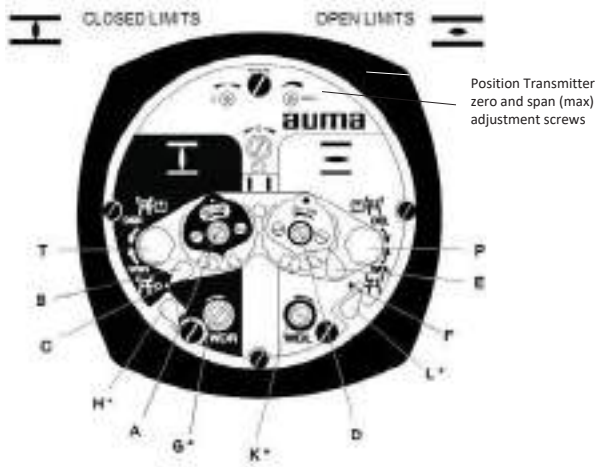

Figure 1. Limit Switch Adjustment Locations inside Auma Actuator

7.7.2 Torque Switch Adjustment Procedure

Torque Switch adjustment is also carried out at the Auma actuator. If torque alarms are occurring on the HMI (resulting from the torque switches tripping), first check that there are no mechanical obstructions before adjusting the torque switch setting.

7.7.2.1 The opening torque switch setting is typically set to 100% of maximum actuator torque and adjusted by loosening the two screws and moving the pointer dial adjacent switch "D". The settings are typically graduated in "Nm x 100" (i.e. "5" = 500Nm, which is the maximum actuator torque).

7.7.2.2 The closing torque switch setting is typically set to 50% of maximum torque and adjusted in the same manner by loosening the two screws and moving the pointer dial adjacent switch "A".

7.7.3 Position Transmitter Adjustment Procedure

Position Transmitter adjustment/calibration is also carried out at the Auma actuator. Prior to adjustments, remove the limit switch compartment cover and mechanical position indicator disc as per the limit switch adjustment procedure.

7.7.3.1 Ensure the open and closed limit switches are set correctly.

7.7.3.2 Move the Diverter Blade to the "fully closed to HRSG" (0%) position.

7.7.3.3 Set the "Zero" adjustment screw as shown in Figure 1 until a signal of 4.0mA is achieved.

7.7.3.4 Move the Diverter Blade to the "fully open to HRSG" (100%) position.

7.7.3.5 Set the "Max" adjustment screw as shown in Figure 1 until a signal of 20.0mA is achieved.

7.7.3.6 Repeat the above steps and make fine adjustments if necessary

Note: The signal can either be measured using the DCS instrumentation, or by removing the link and connecting a milliamp meter across the measuring terminals inside the Local Control Panel (terminals X7.4~X7.5).

APPENDIX A

Diverter Damper Mechanical Drawings (16 drawings total):

Drawing No	*Rev*	*Title*
8790-01-0002	01	Foundation Layout and Loads
8790-01-0004	01	Anchor Details [D1-D5]: Diverter Damper
8790-05-0100	02	Diverter Damper Lifting Points
8790-13-0001	04	Damper General Arrangement
8790-13-0760	01	Pivot Shaft Seal Assembly
8790-13-1500	01	Diverter Cladding (walls)
8790-13-1600	01	Diverter Cladding (floor)
8790-13-2000	01	Blade Seal Layout
8790-13-4000	02	Drive System General Arrangement
8790-13-4100	02	Drive Shaft Guard Assembly
8790-13-4600	02	Drive System Mechanical Locking
8790-13-5000	02	Seal Air System General Arrangement
8790-13-5500	01	Seal Air System Instrument Tubing
8790-13-6500	02	Diverter Damper Support Leg Details
8790-13-7000	01	Diverter Personnel Protection (bottom)
8790-13-7050	01	Diverter Personnel Protection (top)

Electrical and P&ID drawings (8 drawings total):

Drawing No	Rev	Title
8790-85-0007	02	Local Control Panel PLC Digital Output Module
8790-85-0009	03	DCS I/O Signal Summary
8790-85-0020	02	Field Wiring Diagram (Power)
8790-85-0021	03	Field Wiring Diagram (Control)
8790-85-0500	01	Local Control Panel Mounting Skid / Rain Canopy
8790-85-1000	01	Diverter Damper P&ID
8790-85-1001	01	Local Control Panel External Layout
8790-85-1002	02	Local Control Panel Internal Layout

Other documents (4 documents total):

Drawing/Doc No	Rev	Title
8790-90-0060	02	Lubrication Schedule
8790-90-0104	01	Commissioning Procedure

TPA00R1AH-1E1-A30	Auma wiring diagram for main drive actuator
MSP11D0KC3--F18E1 TPA01R1AA-101-000	Auma wiring diagram for seal air valve actuator

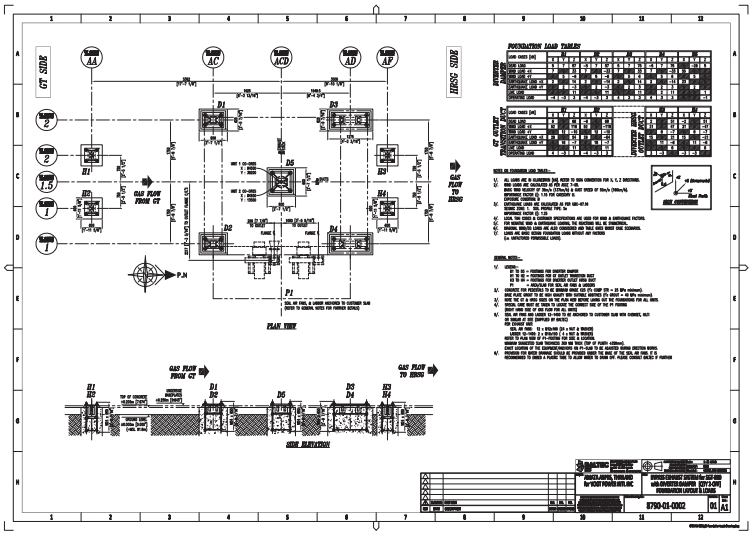

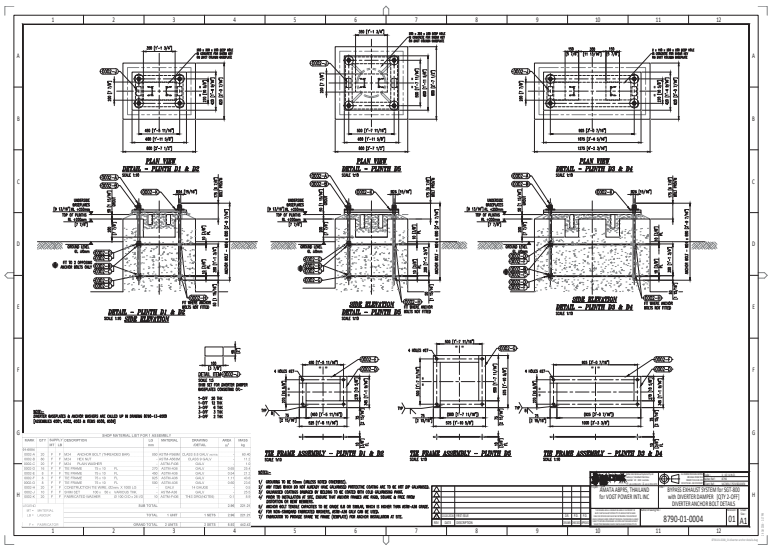

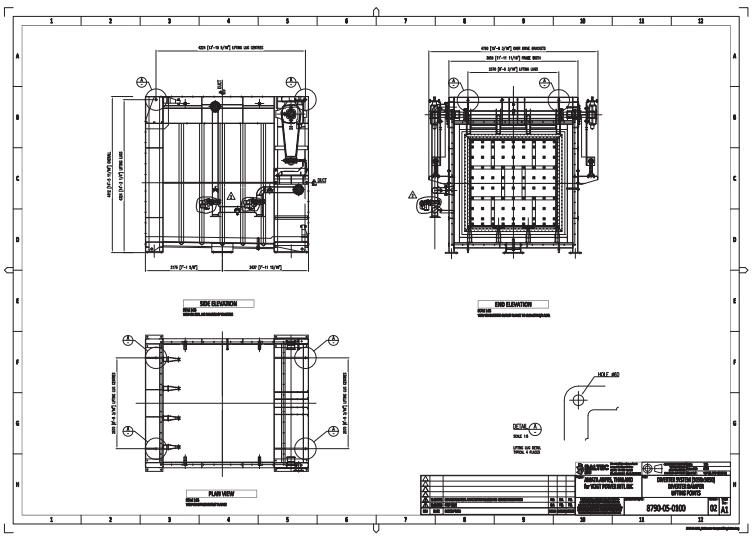

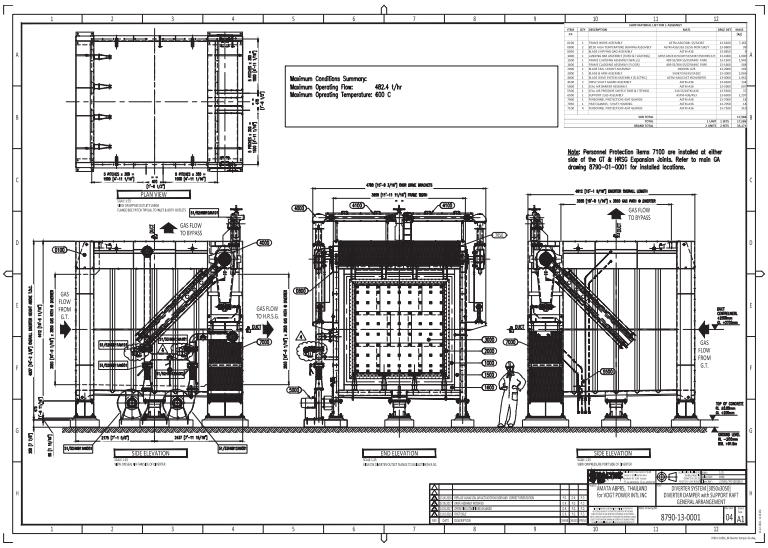
Maximum Conditions Summary:
Maximum Operating Flow: 482.4 L/hr
Maximum Operating Temperature: 600 C
Note: Personnel Protection Items 7100 are installed at either side of the GT & HRSG Expansion Joints. Refer to main GA drawing 8790-01-0001 for installed locations.
PLAN VIEW
SIDE ELEVATION
END ELEVATION
SIDE ELEVATION
GAS FLOW TO BYPASS
GAS FLOW FROM G.T.
DIVERTER SYSTEM (DRAWING)
DIVERTER DAMPER with SUPPORT RAFT
GENERAL ARRANGEMENT
AMATA ABPRS, THAILAND
for VOGT POWER INTL INC
8790-13-0001
04
A1

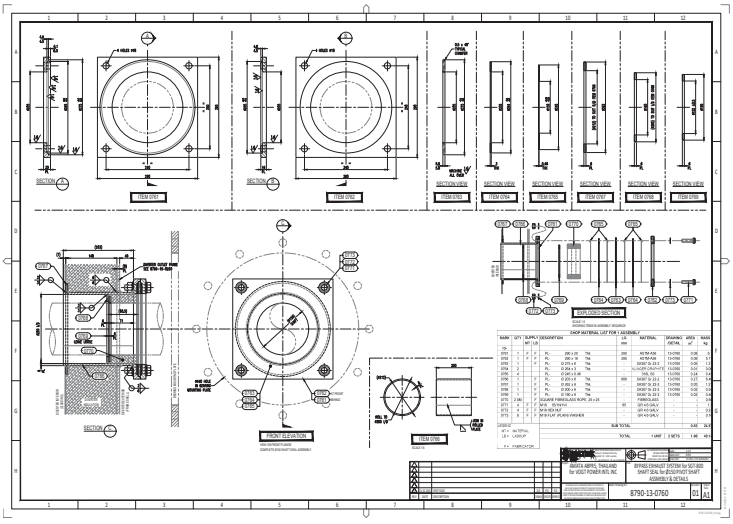
SECTION A
SECTION B
ITEM DTAIL
SECTION VIEW
EXPLODED SECTION
FRONT ELEVATION
SECTION
AMATA ABPRS, THAILAND
for VOGT POWER INTL INC
BYPASS EXHAUST SYSTEM for SGT-800
SHAFT SEAL for BELLOWS/PIVOT SHAFT
ASSEMBLY & DETAILS
8790-13-0760
01
A1

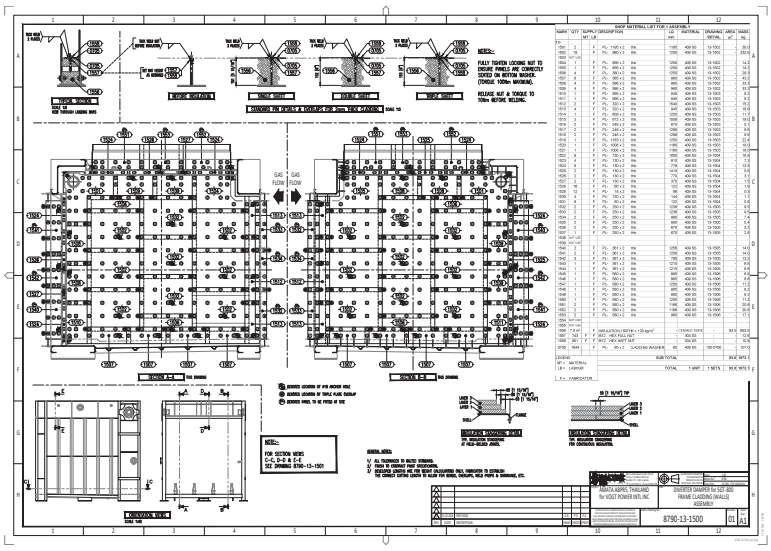
TYPICAL SPACER
SECT SECTION
SHEAR SPACER
SHEAR SPACER
SHEAR SPACER
SCALE 1:10
GAS FLOW
SCALE 1:20
SCALE 1:20
NOTES:-
FULLY TIGHTEN LOCKING NUT TO ENSURE PANELS ARE CORRECTLY SEATED ON BOTTOM BRACKET.
(TORQUE 100Nm MAXIMUM).
RELEASE NUT A TORQUE TO 10Nm BEFORE WELDING.
FOR SECTION VIEWS
C-C, D-D & E-E
SEE DRAWING 8790-13-1501
GENERAL NOTES:
1) ALL TOLERANCES TO BE MADE STRAIGHT.
2) ALL WELDS TO BE CONTINUOUS UNLESS OTHERWISE STATED.
3) DIVERTER SUPPORT RAFT TO BE REMOVED ON COMPLETION OF PACK, FOR ACCESS TO ESTABLISH THE CORRECT CUTTING LENGTH TO ALLOW FOR GRIDS, CONDUITS, MISC PIPES & DRAINAGE, ETC.
SECTION VIEW
SCALE 1:20
AMATA ABPRS, THAILAND
for VOGT POWER INTL INC
DIVERTER DAMPER for SGT-800
FRAME CLADDING (WALLS)
ASSEMBLY
8790-13-1500
01
A1

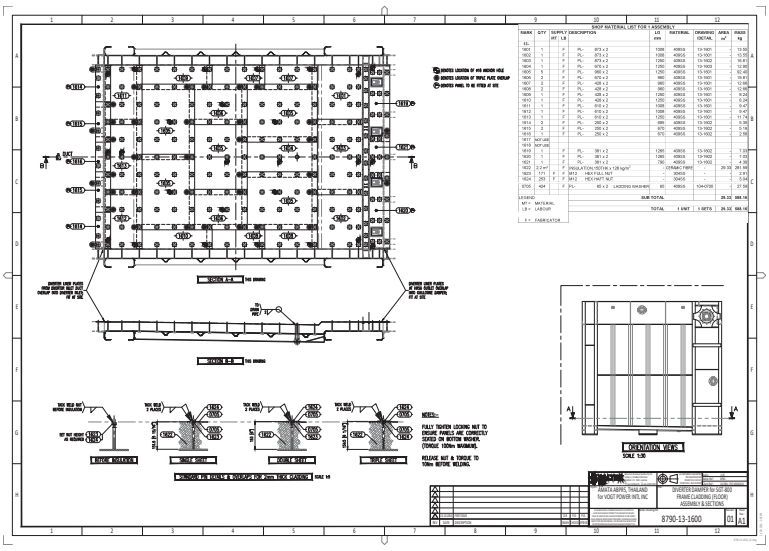
SCALE 1:20
SCALE 1:20
NOTES:-
FULLY TIGHTEN LOCKING NUT TO ENSURE PANELS ARE CORRECTLY SEATED ON BOTTOM BRACKET.
(TORQUE 100Nm MAXIMUM).
RELEASE NUT A TORQUE TO 10Nm BEFORE WELDING.
ORIENTATION VIEW
SCALE 1:20
AMATA ABPRS, THAILAND
for VOGT POWER INTL INC
DIVERTER DAMPER for SGT-800
FRAME CLADDING (FLOOR)
ASSEMBLY & SECTIONS
8790-13-1600
01
A1

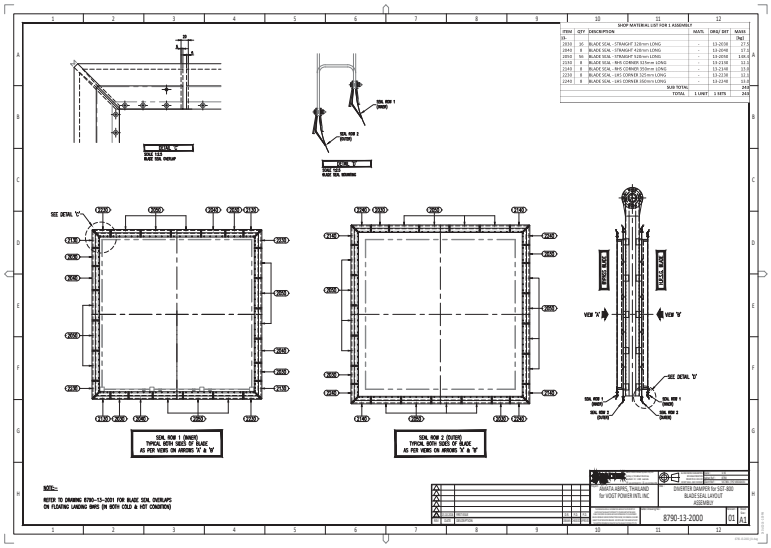
SHOP MATERIAL LIST FOR 1 ASSEMBLY
SEAL ROW 1 (INNER) TYPICAL BOTH SIDES OF BLADE AS PER VIEWS ON ARROWS 'A' & 'B'
SEAL ROW 2 (OUTER) TYPICAL BOTH SIDES OF BLADE AS PER VIEWS ON ARROWS 'A' & 'B'
NOTE:-
REFER TO DRAWING 8790-13-2001 FOR BLADE SEAL OVERLAPS ON FLOATING LANDING BARS (IN BOTH COLD & HOT CONDITION)
AMATA ABPRS, THAILAND for VOGT POWER INTL INC
DIVERTER DAMPER for SGT-800 BLADE SEAL LAYOUT ASSEMBLY
8790-13-2000
01
A1

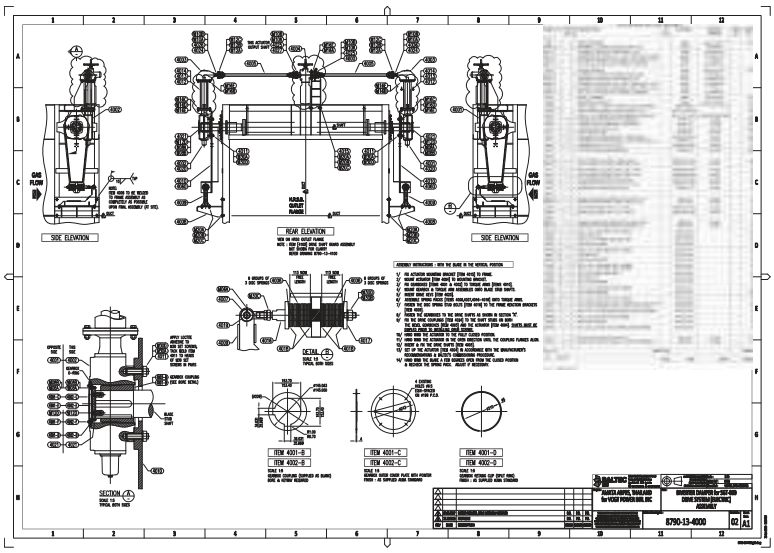
SIDE ELEVATION
REAR ELEVATION
SIDE ELEVATION
DETAIL B
SECTION A
ITEM 4001-B
ITEM 4002-B
ITEM 4001-C
ITEM 4002-C
ITEM 4001-D
ITEM 4002-D
AMATA ABPRS, THAILAND for VOGT POWER INTL INC
DIVERTER DAMPER for SGT-800 DRIVE SYSTEM MECHANICAL ASSEMBLY
8790-13-4000
02
A1

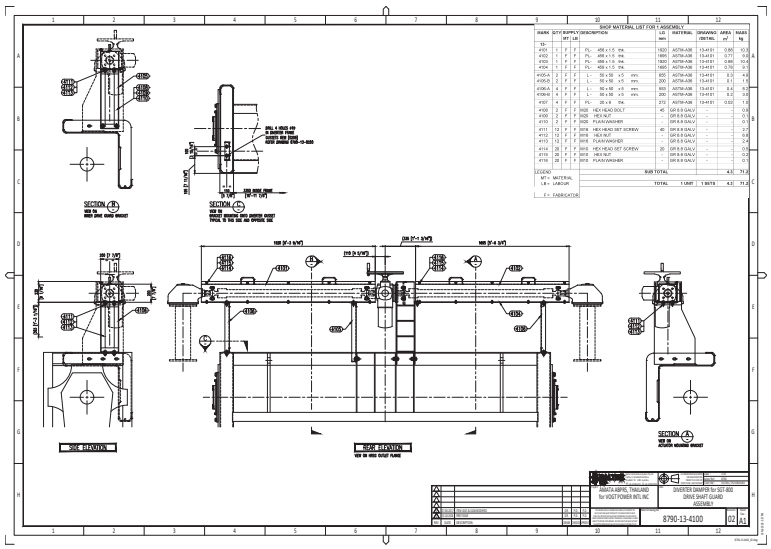
SHOP MATERIAL LIST FOR 1 ASSEMBLY
SECTION B
SECTION C
SIDE ELEVATION
REAR ELEVATION
SECTION A
AMATA ABPRS, THAILAND for VOGT POWER INTL INC
DIVERTER DAMPER for SGT-800 DRIVE SHAFT GUARD ASSEMBLY
8790-13-4100
02
A1

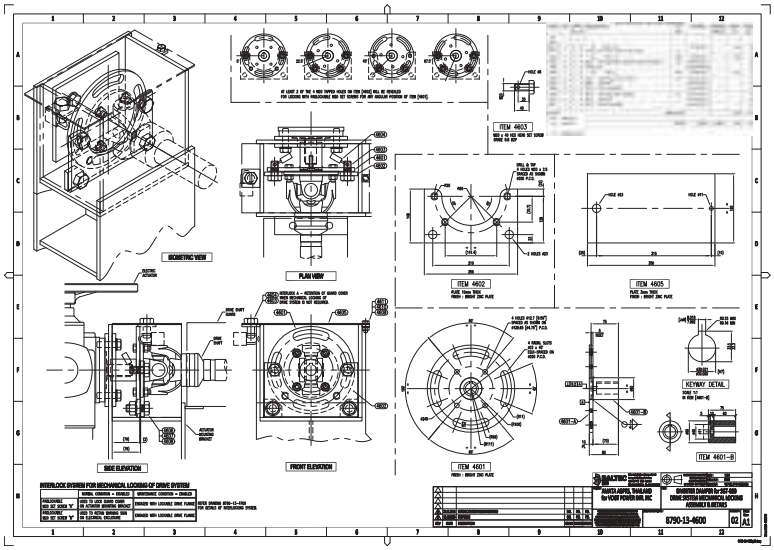
ISOMETRIC VIEW
PLAN VIEW
ITEM 4603
ITEM 4602
ITEM 4605
KEYWAY DETAIL
SIDE ELEVATION
FRONT ELEVATION
ITEM 4601
ITEM 4601-B
INTERLOCK SYSTEM FOR MECHANICAL LOCKING OF DRIVE SYSTEM
AMATA ABPRS, THAILAND for VOGT POWER INTL INC
DIVERTER DAMPER for SGT-800 DRIVE SYSTEM MECHANICAL LOCKING ASSEMBLY & DETAILS
8790-13-4600
02
A1

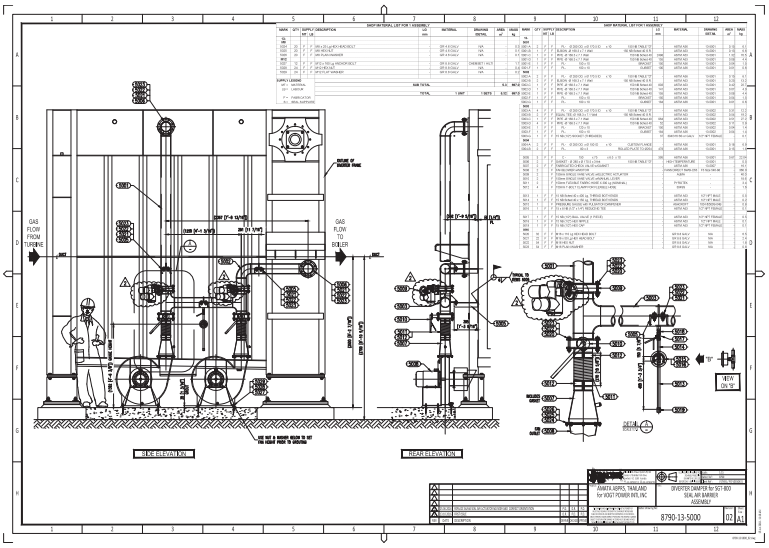
GAS FLOW FROM TURBINE
GAS FLOW TO BOILER
SIDE ELEVATION
REAR ELEVATION
DETAIL
8790-13-5000
02
A1

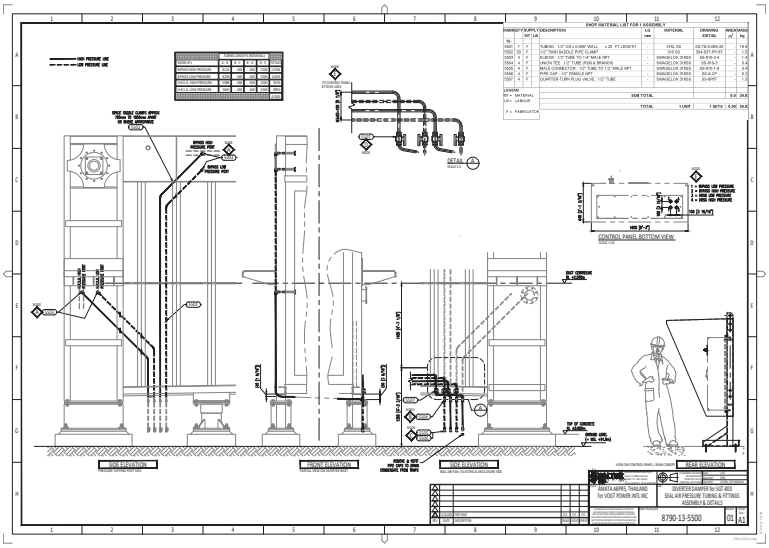
SIDE ELEVATION
FRONT ELEVATION
SIDE ELEVATION
REAR ELEVATION
CONTROL PANEL BOTTOM VIEW
8790-13-5500
01
A1

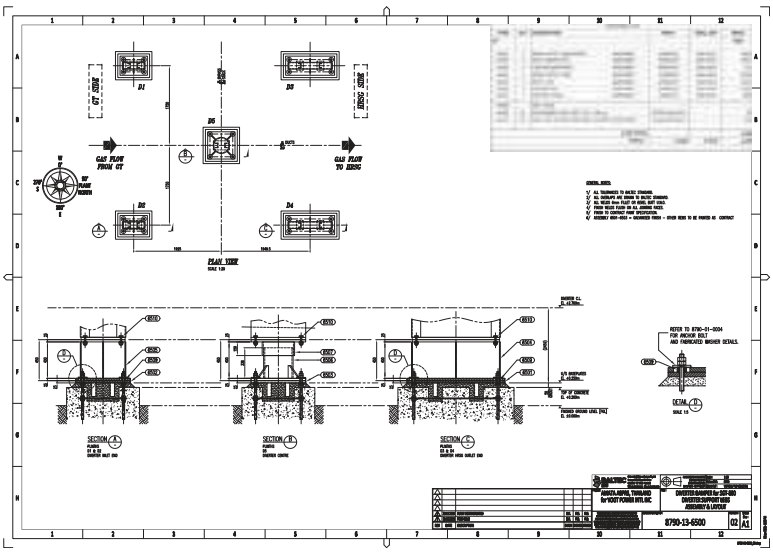
GAS FLOW FROM GT
GAS FLOW TO HRSG
PLAN VIEW
SECTION A
SECTION B
SECTION C
DETAIL D
8790-13-6500
02
A1

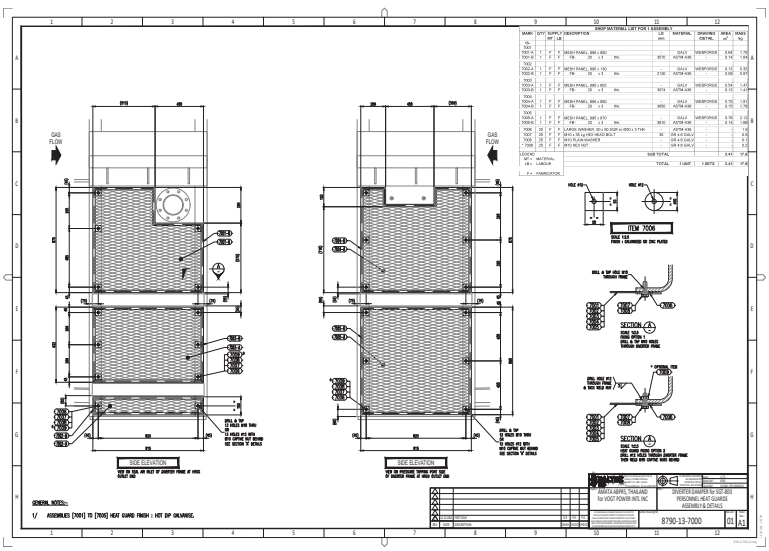
GAS FLOW
GAS FLOW
SIDE ELEVATION
SIDE ELEVATION
ITEM 7006
SECTION A
SECTION A
8790-13-7000
01
A1

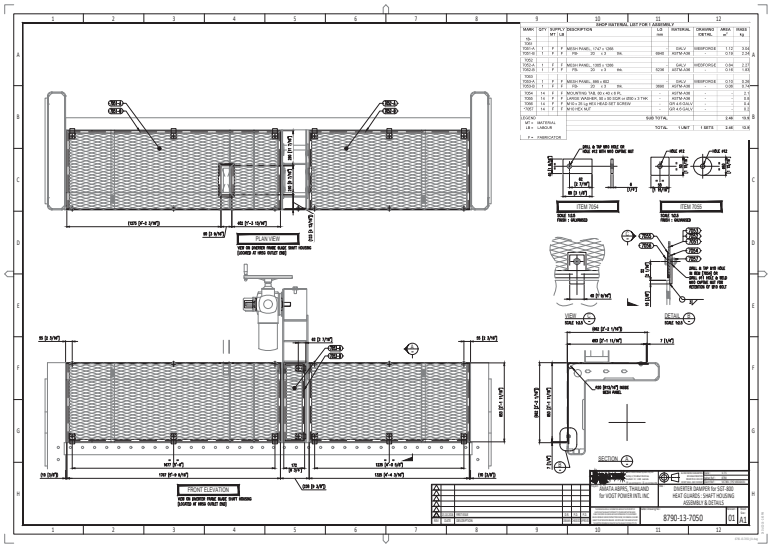
SHOP MATERIAL LIST FOR 1 ASSEMBLY
PLAN VIEW
FRONT ELEVATION
ITEM 7054
ITEM 7055
VIEW
DETAIL
SECTION
AMATA ABPRS, THAILAND
for VOGT POWER INTL INC
DIVERTER DAMPER for SGT-800
HEAT GUARDS, SHAFT HOUSING
ASSEMBLY & DETAILS
8790-13-7050
01
A1

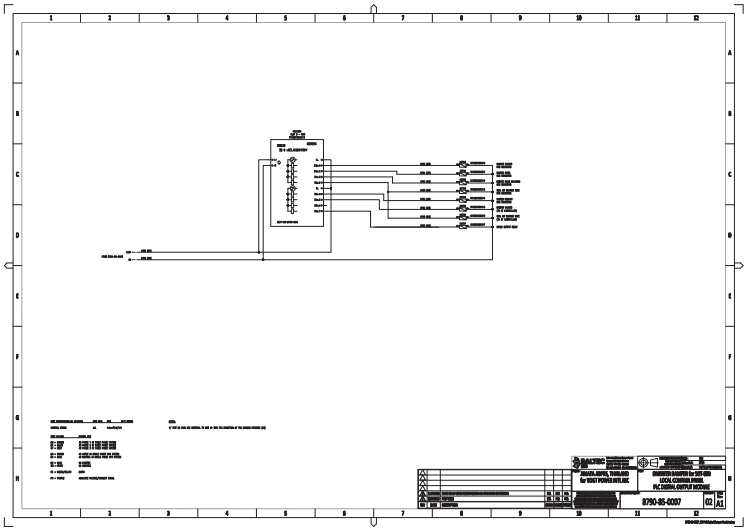
AMATA ABPRS, THAILAND
for VOGT POWER INTL INC
DIVERTER DAMPER for SGT-800
LOCAL CONTROL PANEL
PAC CONTROL OUTPUT INCOMING
8790-85-0007
02
A1

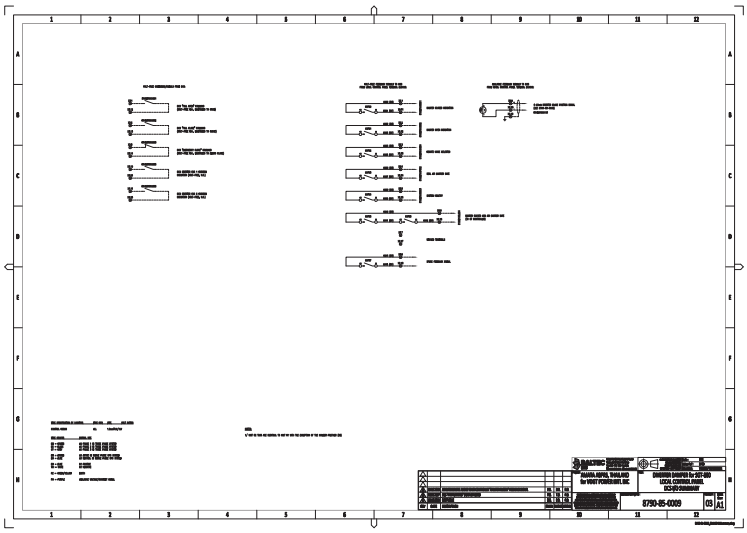
AMATA ABPRS, THAILAND
for VOGT POWER INTL INC
DIVERTER DAMPER for SGT-800
LOCAL CONTROL PANEL
DCS-ID-20000000
8790-85-0009
03
A1

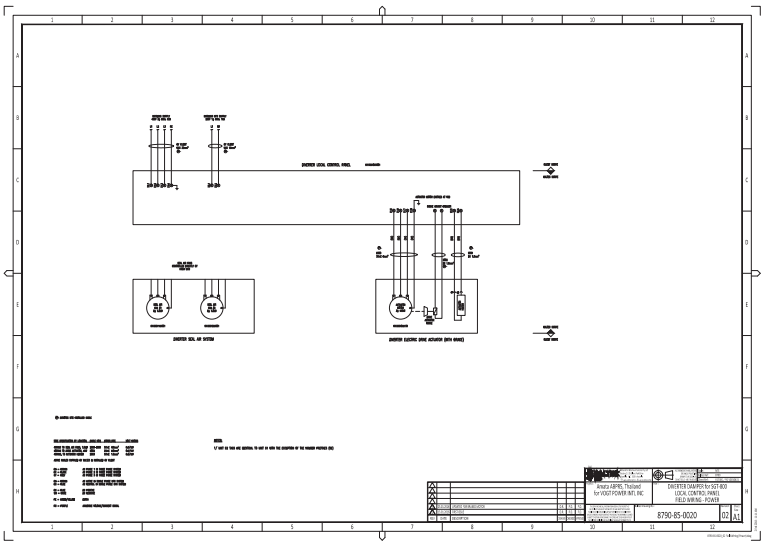
DIVERTER LOCAL CONTROL PANEL
DIVERTER SEAL AIR SYSTEM
DIVERTER ELECTRIC DRIVE ACTUATOR (BOTH SIDES)
AMATA ABPRS, Thailand
for VOGT POWER INTL INC
DIVERTER DAMPER for SGT-800
LOCAL CONTROL PANEL
FIELD WIRING - POWER
8790-85-0020
02
A1

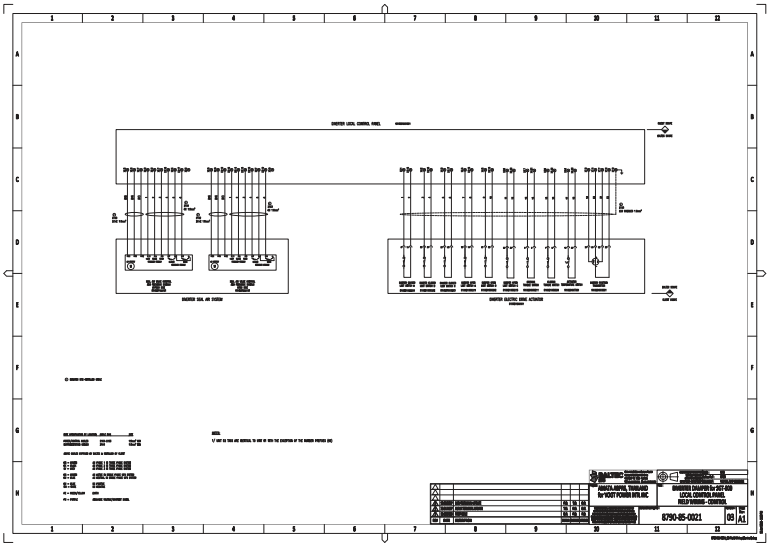
8790-85-0021
03
A1

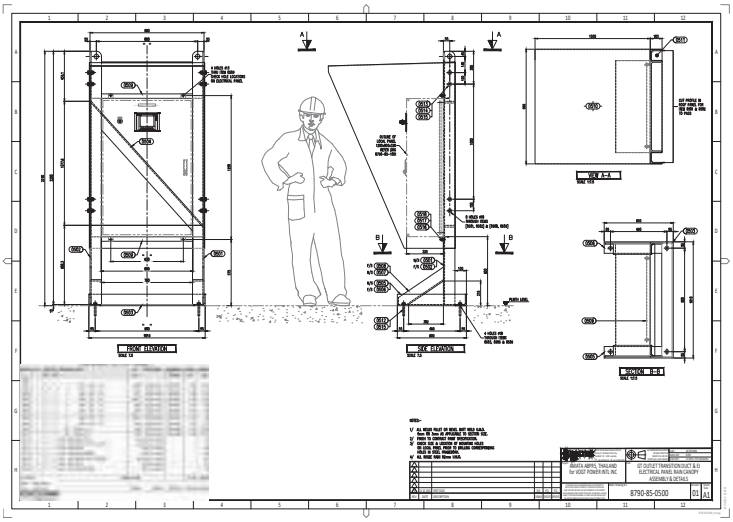
FRONT ELEVATION
SIDE ELEVATION
VIEW A-A
SECTION B-B
8790-85-0500
01
A1

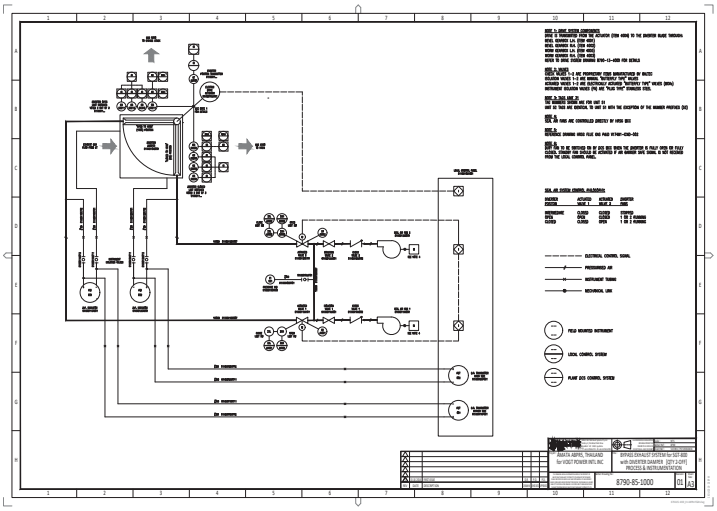
8790-85-1000
01
A3

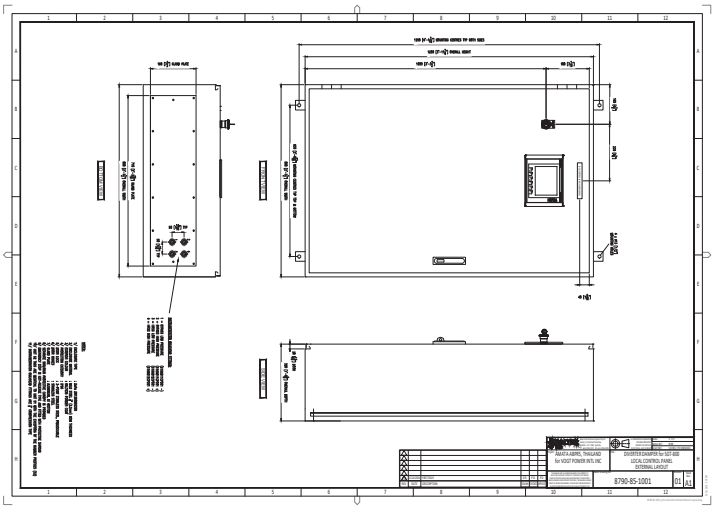
8790-85-1001
01
A1

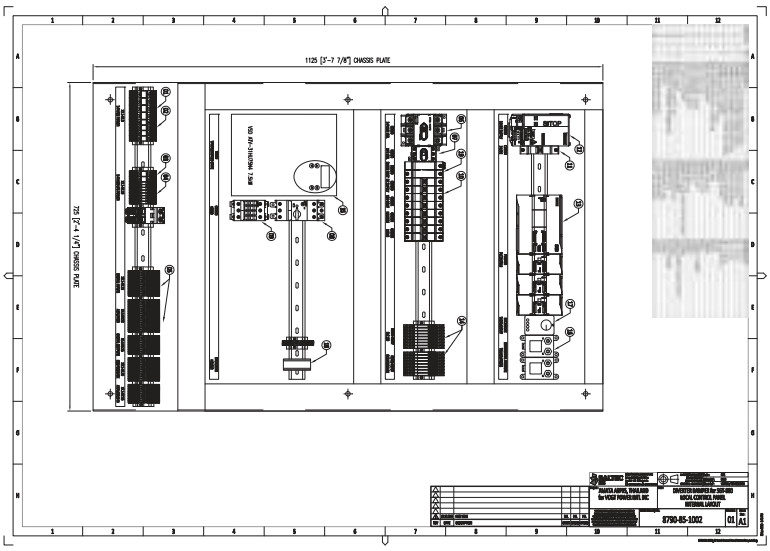

BALTEC IES

BALTEC IES PTY LTD

LUBRICATION SCHEDULE

4/35 Gilbert Park Drive, Knoxfield, Victoria, 3180 Australia
Telephone +61 3 9763 6711 Fax +61 3 9763 6799

8790-90-0060
17491 AMATA ABPR5 PROJECT, THAILAND

No.	Component Description	Component Type	Manufacturers Recommended Lubrication Frequency	Lubrication Procedure	Lubricant Type	Lubricant Qty
1	Diverter Drive System - Actuator	Auma SA14.6	6-8 years if operated frequently 10-12 years if seldom operated	Thoroughly clean all old grease and residues from gear housing and re-fill with new lubricant (consult Baltec for detailed procedure)	F15 Shell Alvania 1029	2.3 dm^3
2	Diverter Drive System - Bevel Gearboxes	Auma GK25.2	6-8 years	Thoroughly clean all old grease and residues from gear housing and re-fill with new lubricant (consult Baltec for detailed procedure)	F15 Shell Alvania 1029	4.1 dm^3
3	Diverter Drive System - Worm Gearboxes	Auma GS250.3	2-3 years	Thoroughly clean all old grease and residues from gear housing and re-fill with new lubricant (consult Baltec for detailed procedure)	F4 Oest Special Grease EP	12.2 dm^3
4	Diverter Drive System - Drive Shafts	Hardy Spicer 1550 series	400 hours of drive system operation or 12 months - whichever occurs first	Apply grease to the roller bearing grease nipples until discharge from needle roller bearing seals is achieved. Lubrication of the sliding spline should continue until grease exudes from the hole or rubber grommet in the welch plug at the end of the sleeve yoke between the yoke ears. When this occurs cover the hole and continue to pump in grease until it exudes from the sleeve yoke end seal.	Fuchs Renolit LX EP2 or equivalent	as req'd
5	Diverter Drive System - Pivot Bearings	Baltec proprietry design	not required	Note: bearings are self-cleaning and self-lubricating. Lubricating could be detrimental to bearing life	none	-
6	Seal Air Fan Motor	ABB TEFC 11kW	18000 hours of operation	Apply grease through grease nipple during operation of fan		-
7	Seal Air Butterfly Valve Actuators	AUMA SQ05.2	not required	-	none	-

BALTEC IES

DIVERTER COMMISSIONING PROCEDURE

Unit 4/35 Gilbert Park Drive, Knoxfield, Victoria, 3180 Australia
Telephone: +61 3 9763 6711 Fax: +61 3 9763 6799
www.baltec-ies.com.au

8790-90-0104
V17491 AMATA ABPR5 PROJECT, THAILAND

STEP	DESCRIPTION	BALTEC CHECK (INITIAL)	REMARKS/RESULTS
PART A) Initial setup and adjustments			
1	Make good an initial inspection of the Diverter Damper, including Frame, Seals and standing for completeness of assembly in accordance with the Installation and Maintenance Manuals 8790-90-0000 & 001.		
2	Confirm that Drive System components including Actuator, Gearboxes and Drive Shafts are installed as per Baltec drawing 8790-11-0400.		
3	Confirm that the Seal Air System components including Fans, Valves and Pipes are installed as per Baltec drawing 8790-11-0600.		
4	Confirm that the Instrument Tubing and Differential Pressure Indicating Gauges are installed as per Baltec drawing 8790-11-0600.		
5	Confirm that the Local Control Panel has been fully tested assembly to Baltec document and as-built.		
6	Confirm that power and control wiring has been installed between the MCC/DCS and the Seal Air Fan Motors.		
7	Connect power and control/instrumentation wiring between the Local Control Panel and the Seal Actuator as per Baltec Field Wiring Diagram 8790-90-0030 & 0031 (cables 3005, 3001 & 3104), ensuring that cable 3104 shield is grounded at the control panel end.		
8	Connect power and control/instrumentation wiring between the Local Control Panel and the MOV actuators using Baltec Field Wiring Diagram 8790-90-0031 (cables 3105-3108).		
9	Once all field wiring is verified by Baltec site engineer, connect and switch on the incoming hydraulic supply and 1 phase UPS supply on the MCC.		
10	Confirm supply voltage at incoming power terminals.		Phase-neutral = V Phase-phase = V
11	Confirm correct phase sequence of incoming supply to the local panel and port connect if necessary.		
	IMPORTANT NOTE: Ensure all personnel and equipment are clear of the Diverter Fans prior to commencing test step of test.		
12	Jog momentarily energise each seal airfan from the MCC. Check rotational direction of each fan against the arrows marked on the equipment and correct if necessary by swapping two phases of the equipment end of the cable.		
13	Turn on the 1 phase UPS isolator and MOV circuit breaker in the control panel and check for correct operation of the MOV motors by operating them in local mode. Temporarily remove the flexible pipe from the fan to visually check the valve position from underneath. Adjust MOV limitswitch switches if necessary.		
14	Power up the control system by turning on the PLC circuit breaker and operate the MOVs in local mode again. Check no errors experienced feedback at the HMI.		
15	When operation is satisfactory, switch both MOVs to remote mode.		

	IMPORTANT NOTE: Ensure all personnel and equipment are clear of Diverter operation area prior to commencing test step of test.		
16	Check to ensure the Seal Airfans have been removed (padlock option for distribution).		
17	Turn on the main 3 phase isolator and all remaining circuit breakers in the control panel.		
18	Close Diverter Blade fully using the manual handwheel, ensuring the blade seals seal correctly against the landing lips and the blade is in contact with the blade stops. Adjust the blade stops if necessary.		
19	Calibrate the 4-20mA position feedback transmitter such that it reads 4.00mA. Use a loop calibrator connected to the test terminals X1.4-X1.5.		
20	Turn handwheel back 3 turns (to opening direction) and signal actuator "closed position limit switch (marked) WOR, and closed intermediate position switch (marked) NOR).		
21	Confirm that position Diverter "closed" indication is given on the HMI (3 x closed limit switches activated) and the position is shown as "0%".		
22	Start the System, set to Local Mode and press the local "Slow Open" button on the MBPM fully open the diverter. Refer to the Operating Manual 8790-90-0004 if necessary.		
23	Adjust the signal open position with the manual hand wheel if necessary to ensure the blade seals seal correctly against the landing lips and the blade is in contact with the blade stops. Adjust the blade stops if necessary.		
24	Calibrate the 4-20mA position feedback transmitter such that it reads 20.00mA. Use a loop calibrator connected to the test terminals X1.4-X1.5.		
25	Turn handwheel back 3 turns (to closing direction) and signal actuator open position limit switch (WOR), and open intermediate position switch (marked NOR).		
26	Confirm that position Diverter "open" indication is given on the HMI (3 x open limit switches activated) and the position is shown as "100%".		
27	Check and if necessary rectify any alarms present on the HMI.		
28	Operate diverter through several cycles using local "Open" and "Close" pushbuttons and check each positioning if both directions.		
29	If necessary, make fine adjustments to limit switches, torque switches, PLC program and/or VSD parameters.		
30	Check and record actual diverter opening and closing times. Nominal operation time is 60 seconds.		Open time = sec Close time = sec
PART B) Seal Air System test			
31	Check Diverter (PF02-MOV) opens only when the diverter is fully closed.		
32	With the diverter fully closed, check that you can easily jog/start control of MCC & "Air Fans" message is displayed on HMI.		
33	Record actual differential pressure at the PF02 side as displayed on the HMI. Minimum pressure is 2 kPa(g).		DP_{Fan} = kPa(g)
34	Check Baffle Bypass MOV opens only when the diverter is fully open.		
35	With the diverter fully open, check that you can easily jog/start control of MCC & "Air Fans" message is displayed on HMI.		
36	Record actual differential pressure at the bypass side as displayed on the HMI. Minimum pressure is 2 kPa(g).		DP_{Bypass} = kPa(g)
PART C) Remote Mode test (only applicable if DCS & interconnection wiring is completed)			
37	With the system running, set operating mode to "Remote". Refer to the Operating Manual 8790-90-0004 if necessary.		
38	Check that "Remote Mode" feedback signal is received at the DCS.		
39	Simulate a DCS "full open" command and confirm that the diverter moves to the fully open position.		
40	Check that "Diverter Open" feedback signal is received at the DCS.		
41	Simulate a DCS "full close" command and confirm that the diverter moves to the fully closed position.		
42	Check that "Diverter Closed" feedback signal is received at the DCS.		

[illegible]	[illegible]		[illegible]
[illegible]	[illegible]		
[illegible]	[illegible]		
[illegible]			
PART 5: Final inspection			
[illegible]	[illegible]		
[illegible]	[illegible]		
[illegible]	[illegible]		
[illegible]	[illegible]		
[illegible]	[illegible]		
[illegible]	[illegible]		
[illegible]	[illegible]		

[illegible] 01 02

[illegible] [illegible]

[illegible] _____ [illegible] _____

[illegible] _____ [illegible] _____

[illegible] _____ [illegible] _____

Lubricant F15: ALVANIA 1029	Product information

Description:	The lubricant is a high-quality part-synthetic gearbox grease. The grease protects against corrosion and is completely water-resistant.	
Designation:	ALVANIA 1029	
Manufacturer:	Shell Deutschland Oil GmbH Suhrenkamp 71 – 77 22335 Hamburg/Germany	
Technical data:	Soap base	Lithium calcium soap
	Drop point	> 173 °C
	Worked penetration	440
	NLGI grade according to DIN 51818	00/000
	Density	0.89 kg/dm^3
	Classification according to DIN 51502 ISO 6743-9	GP 00/000 G-40 ISO-L-XDCFB 00/000
Temperature application range (for AUMA products):	Actuators Valve gearboxes	–40 °C to +80 °C –40 °C to +80 °C

Equivalent products:

Only the ALVANIA 1029 lubricant, specially developed for AUMA products, completely guarantees the product characteristics specified by AUMA.

The following similar products, generally available, may be used as alternative lubricants for the temperature range between –25 °C and +80 °C :

BP/Castrol	Olit 00
ExxonMobil	Mobilux EP 004
Shell	Gadus S4 V45AC

Alternative worldwide source of supply for Gadus S4 V45AC:

Jokisch GmbH

Phone	+49 5202 9734-0
Fax	+49 5202 9734-49
Email	info@jokisch-fluids.de

When using a product with the same characteristics/classifications according to DIN 51502 or ISO 6743-9, similar lubrication characteristics can be assumed.

When using another lubricant, the AUMA warranty does not apply to the total product life cycle.

ATTENTION: The grease used by AUMA may not be mixed with other soap base greases.

We reserve the right to alter data according to improvements made. Previous documents become invalid with the issue of this document.

auma®

Issue **1.11**

Y004.212/002/en

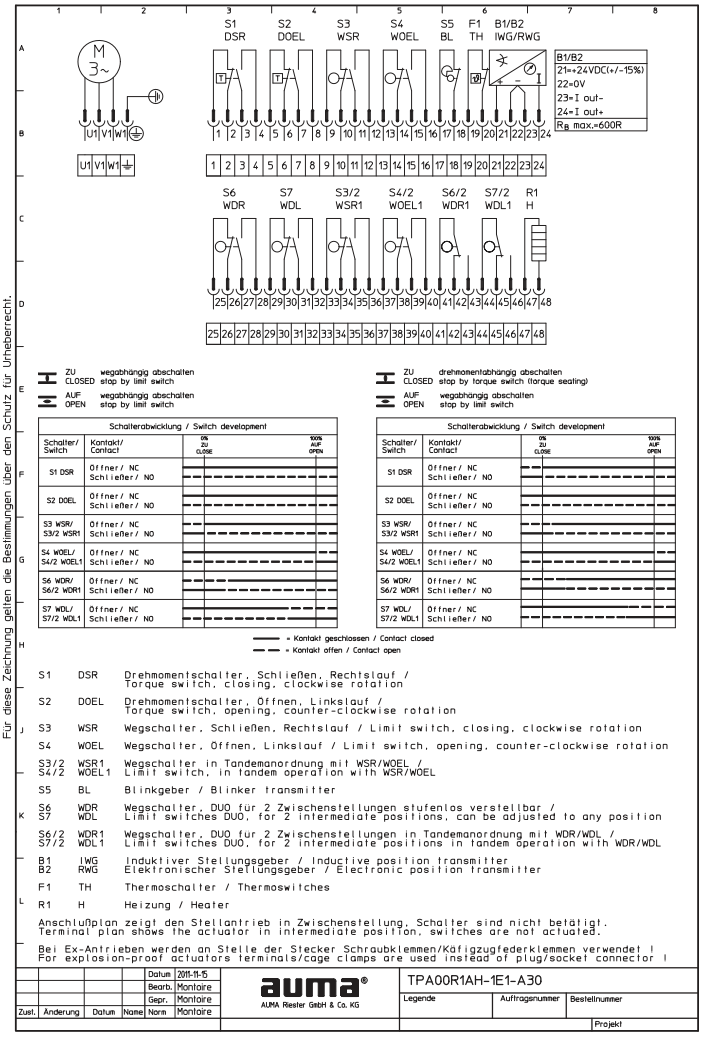

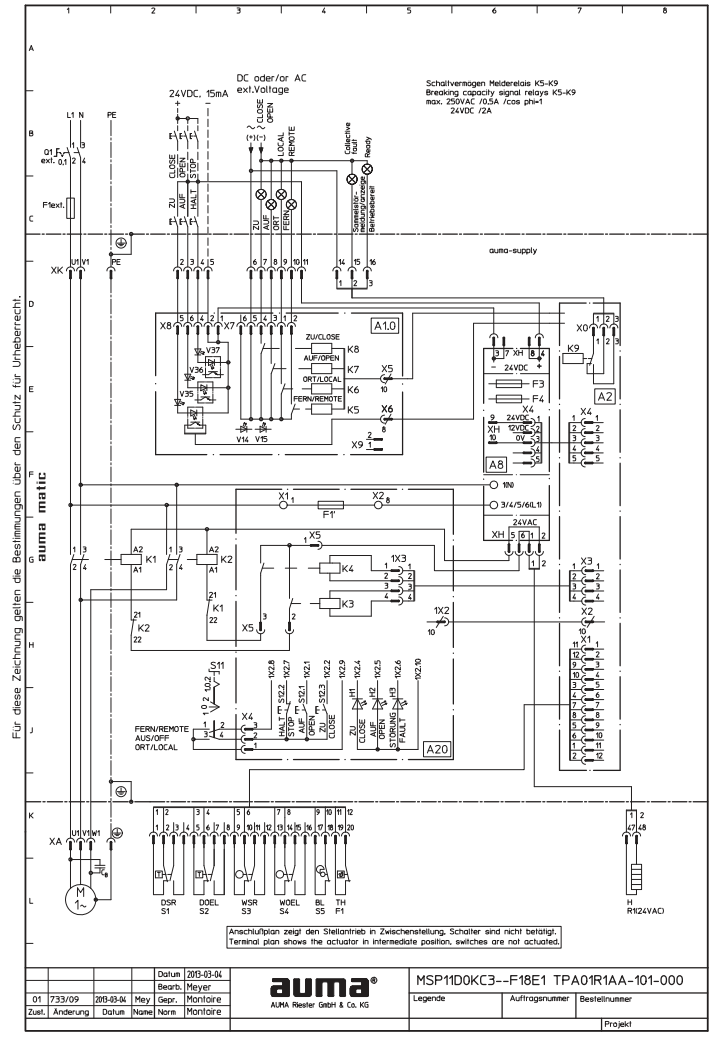

Baltec IES Pty Ltd
Factory 4, 35 Gilbert Park Drive, Russellard VIC 3180, Australia
Tel: +61 [illegible] www.baltecies.com.au

PROCEDURE TO INSTALL BOLT-ON SEAL AIR FLANGE TO DIVERTER DAMPER (HRSG-SIDE)

JOB NAME:	AMATA ABPR1/2 & ABP5/4	
BALTEC PROJECT NUMBER:	8312 & 8513	
VPI JOB REFERENCE:	17460/61 & 17480/81	
DOCUMENT REVISION:	1	
ALSO APPLICABLE TO:	BOWIN	(BALTEC REF 8614 / VPI REF 17488)
	ABPR III	(BALTEC REF 8722 / VPI REF 17489)
	ABPR IV	(BALTEC REF 8770 / VPI REF 17490)
	ABPRV	(BALTEC REF 8790 / VPI REF 17491)

DOCUMENT REVISION LOG

Rev	Date	Description	Created by	Reviewed by	Approved by
01	05.07.2017	First Issue	FO	TO	DK

VOGT POWER INTERNATIONAL
V17490-ADXE-508-00
11-Jul-2017

1. INTRODUCTION

The diverters for ABPR1/2 were delivered late in 2012 and commissioned in 2013. In early 2017 an issue was reported whereby cracks had developed around the seal air entry flange at the HRSG side of diverter dampers 11 & 12, as marked "A" in Fig1 below.

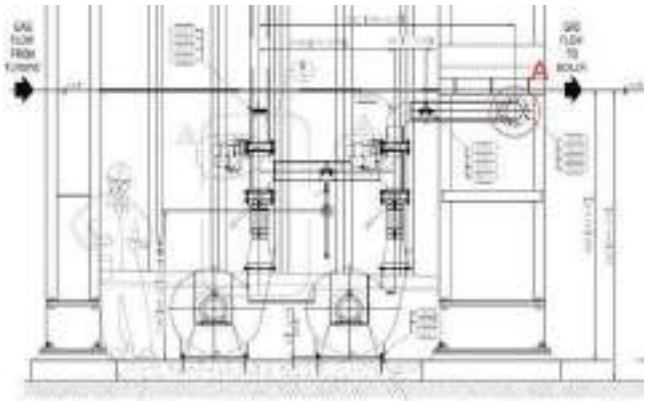

Fig.1 – view on the seal air side of the diverter damper

These were repaired at the time by welding up the cracks. Refer to the report produced by Baltec IES, dated 02 Feb 2017 for further details.

Since then, however, cracks have appeared in a similar manner on ABPR2 unit 21 & 22, as well as ABP5 unit 51, so the decision was taken to make a design modification to address this issue. The procedure may be applied to all other SGT800 diverter dampers supplied to VPI by Baltec IES as a preventative measure.

2. CORRECTIVE ACTION

It is believed that the cracking is a result of thermal cycling in the area in question, as the GT units are typically run during the daytime and shut down each night. To prevent the thermal cycling from producing cracks in the area where the seal air flange is welded to the diverter shell, a modified seal air flange assembly will be produced which bolts to the shell with a gasket, rather than being welded on.

3. INSTALLATION METHOD

Reference drawings: 8790-13-0200 (diverter outlet frame assembly)
8790-13-0201 (diverter outlet frame assembly)
8790-13-0770 (replacement seal air flange, bolt-on)
8790-13-5000 (seal air system general arrangement)

Note: the reference drawings listed are for ABPR V, but equally applicable to all jobs listed on page 1.

Parts required per diverter: Qty 1 x replacement bolt-on seal air flange, item 13-0770
Qty 8 x M10x25 studs (grade 8.8 galvanised or similar) with washer & nut
Qty 1m x 25x3mm fiberglass ladder tape gasket

With the GT shut down, the replacement procedure is as follows:

a. Ensure that the necessary hot work permits are obtained.
b. Temporarily support the horizontal seal air pipe 13-5002 (see 8790-13-5000) and unbolt it from the seal air flange on the diverter at location "A" in Fig.1. Take care not to lose the fasteners or gasket, as they will be re-used for installation later.
c. Using oxy-acetylene cutting equipment (if allowed at site), or otherwise a grinder, cut off the existing seal air flange from the diverter shell and grind the welds off flush with the surface of the shell. This will leave a rectangular cut-out in the shell approximately 70mm wide x 265mm high as shown in Fig.2. below.

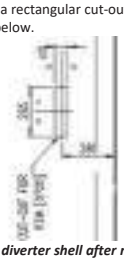

Fig.2 – cut-out left in diverter shell after removing existing seal air flange 13-0720

d. Weld in place eight (8) new M10x25 studs, as shown in Section C-C of drawing 8790-13-0201.
e. After removing all welding spatter and ensuring that the surface is smooth, touch-up the paint as per the site-specific Baltec painting procedure (please contact Baltec if details are required). Allow the paint to dry before proceeding to the next step.
f. Install the replacement flange 13-0770, ensuring that ladder tape gasket is inserted between the diverter shell and the flange. Install and tighten the retaining nuts and washers.
g. Bolt the seal air pipe 13-5002 to the replacement flange, ensuring that the gasket is in place, and remove any temporary supports.

h. Perform a final visual check to ensure that all fasteners are tightened securely and that no gaps are present in the finished assembly.

- END OF PROCEDURE –

DRAWING ATTACHMENTS:
- 8790-13-0200 (diverter outlet frame assembly)
- 8790-13-0201 (diverter outlet frame assembly)
- 8790-13-0770 (seal air flange, bolt-on)
- 8790-13-5000 (seal air system general arrangement)

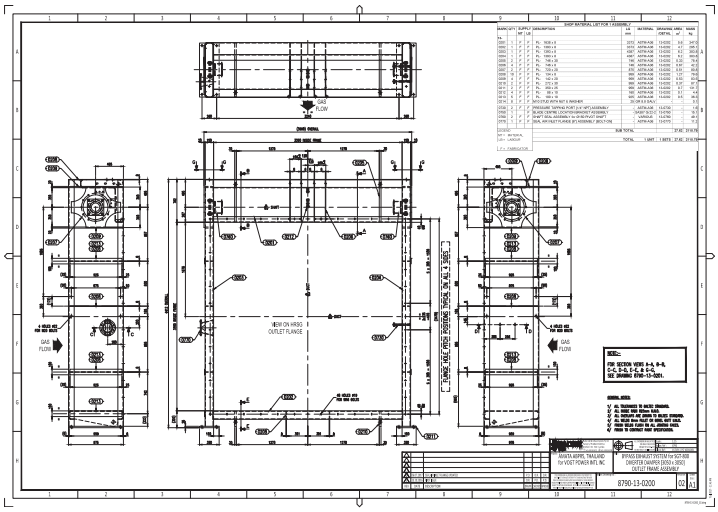
SHOP MATERIAL LIST FOR 1 ASSEMBLY
GAS FLOW
ZONE DIVIDER
ZONE BOND FRAME
HEIGHT ON HINGE SIDE
OUTLET FLANGE
NOTE:
FOR SECTION VIEWS A-A, B-B, C-C, D-D, E-E, & F-F, SEE DRAWING 8790-13-0201.
GENERAL NOTES
ANANTA AEROFIL THAILAND
for VOGT POWER INTL INC
DIVERTER DAMPER (1050 x 1850)
OUTLET FRAME ASSEMBLY
8790-13-0200
00
A1

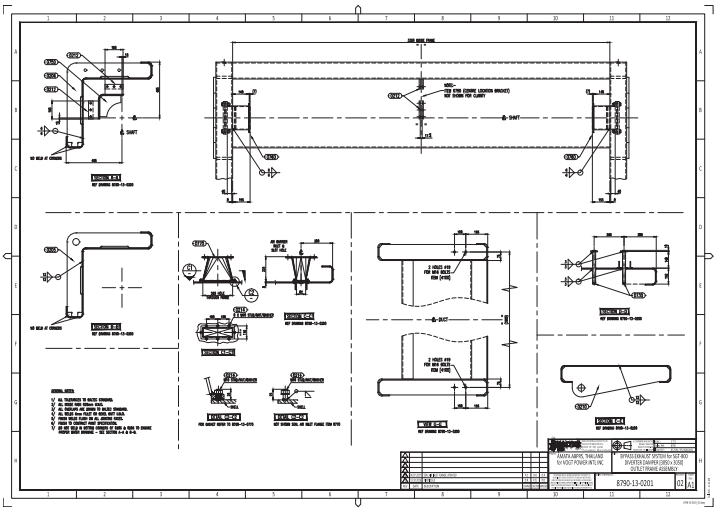
ZONE BOND FRAME
NOTE:
ITEM 0770 (ZONE LOCATION BRACKET) NOT SHOWN FOR CLARITY
SHIFT
SECTION A-A
SECTION B-B
SECTION C-C
SECTION D-D
SECTION E-E
SECTION F-F
GENERAL NOTES
ANANTA AEROFIL THAILAND
for VOGT POWER INTL INC
DIVERTER DAMPER (1050 x 1850)
OUTLET FRAME ASSEMBLY
8790-13-0201
01
A1

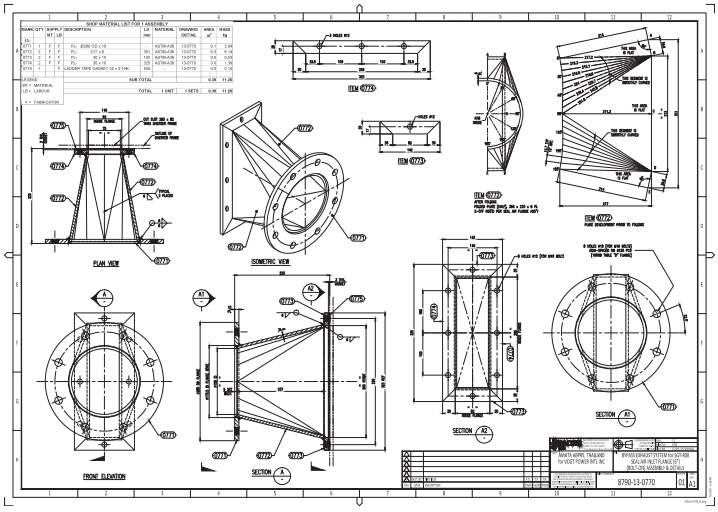
SHOP MATERIAL LIST FOR 1 ASSEMBLY
PLAN VIEW
ISOMETRIC VIEW
FRONT ELEVATION
SECTION A-A
SECTION B-B
SECTION A1-A1
SECTION A2-A2
ITEM 0772
ANANTA AEROFIL THAILAND
for VOGT POWER INTL INC
DIVERTER DAMPER for SCT-600
SEAL AIR INLET FLANGE (ST)
(8017-2)-(4) ASSEMBLY & DETAILS
8790-13-0770
01
A1

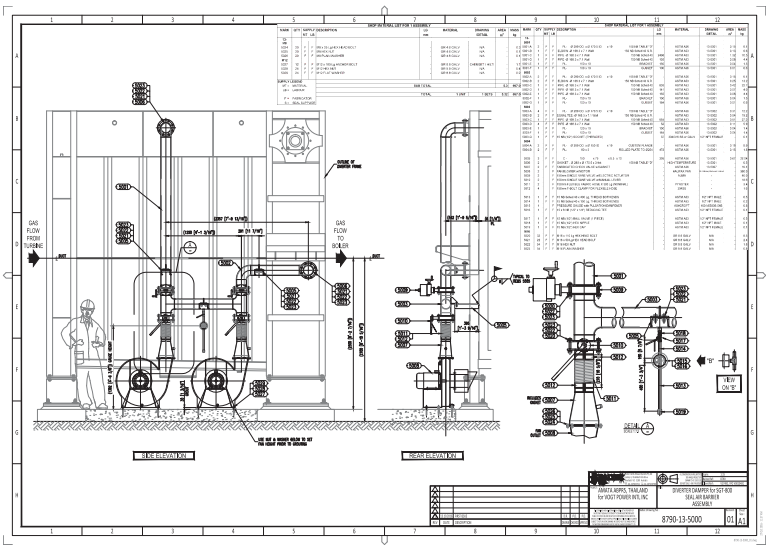
SHOP MATERIAL LIST FOR 1 ASSEMBLY
GAS FLOW FROM TURBINE
GAS FLOW TO BOILER
SIDE ELEVATION
REAR ELEVATION
DETAIL A
VIEW 'A'
ANANTA AEROFIL THAILAND
for VOGT POWER INTL INC
DIVERTER DAMPER for SCT-600
SEAL AIR BARRIER
ASSEMBLY
8790-13-5000
01
A1

OPERATION
&
MAINTENANCE MANUAL

For

Vogt Power International Inc.
Heat Recovery Steam Generators

For

ABPR5 Combined Cycle Cogeneration Plant Project
Amata B. Grimm Power (Rayong) 5 Limited

Vogt Power Project No. 17491

Vogt Power Document No. V17491-OMNE-003

VOLUME 3

OPERATION & MAINTENANCE MANUAL

For

Vogt Power International, Inc.
Heat Recovery Steam Generators

for

Amata B. Grimm Power (Rayong) 5 Limited
ABPR5 Combined Cycle Cogeneration Plant Project

Vogt Power Project No. 17491

Vogt Power Document No. V17491-OMNE-003

Written By: Poonsap Homniyom

Reviewed By:

Revision: 00
Date: 24 Apr 2017

The purpose of this manual is to suggest procedures for the operation and maintenance of the HRSG and its subsidiary parts. This guide does not cover all variations in equipment, nor does it provide for every possible requirement or contingency. The specific site conditions, staffing, accessibility, and interfacing equipment must be considered when implementing the information provided herein.

Refer to the Vogt Power International Erection Manual for specific information concerning unloading, storage, and installation of the equipment. Refer to the Vogt Power International Training Manual for operator training. Should other information be desired, or particular situations arise that are not addressed in this manual, the matter should be referred to Vogt Power International.

This manual describes the HRSG, its components and ancillaries to aid the Owner in its development of appropriate procedures for operating and maintaining the equipment. It also contains specific design and performance information, including drawings, equipment lists, and data sheets, purely for convenience. However, this document is not contractual, and should not be referred to in contractual matters.

This document contains minimum procedures for operating and maintaining the HRSG components and is intended to assist the operators in planning and scheduling operational and maintenance activities. It is not intended to and does not cover all details or variations in equipment, or provide for every possible contingency.

INDEX

VOLUME 1 – Vogt Power HRSG O&M Manual

SECTION I DESIGN DATA

Tab 1 - Drawing and Document List
Tab 2 - System Design Description
Tab 3 - Safety Valve Data
Tab 4 - Performance Data
Tab 5 - Start-up Procedure
Tab 6 - Gas Side Pressure Drop
Tab 7 - Heating Surface Data
Tab 8 - Boiler Feedwater and Boiler Water
Tab 9 - Performance Prediction

SECTION II OPERATIONAL PROCEDURES

Tab 1 - Safety Precautions
Tab 2 - Suggested Operational Procedure
Tab 3 - Removal from Service, Lay-up, and Long Term Storage
Tab 4 - Tube Failure Analysis
Tab 5 - Troubleshooting Procedures
Tab 6 - Maintenance Checklists
Tab 7 - Pressure Part Life
Tab 8 - Warranty, Inspection and Maintenance Reports and Forms

SECTION III COMMISSIONING PROCEDURES

Tab 1 - Preliminary Filling and Flushing
Tab 2 - Hydrostatic Test
Tab 3 - Alkaline Boilout
Tab 4 - Chemical Cleaning
Tab 5 - Steam Blow Cleaning
Tab 6 - Commissioning

SECTION IV SUBVENDOR MANUALS

Volume 2 – Divert Damper

Volume 3 – Valves and Inline Components

Tab 1 - Control Valves
Tab 2 - Safety Valves
Tab 3 - General Service Valves
Tab 4 - Actuators for General Service Valves
Tab 5 - Strainers
Tab 6 - Steam Sample Nozzles
Tab 7 - Instrument Valves
Tab 8 - Attemperators

Volume 4 – Instrumentation

Tab 1 - Transmitters
Tab 2 Level Gauges and Remote Level indicators
Tab 3 - Thermocouples & Temperature Indicators
Tab 4 - Pressure Gauges and DP Gauges

Volume 5 – Deaerator & Heat Exchanger

Tab 1 - Deaerator

Volume 6 – Miscellaneous Equipment

Tab 1 - Outlet Expansion Joints
Tab 2 - Inlet Expansion Joints
Tab 3 - Steam Silencers
Tab 4 - Pipe Supports
Tab 5 - Flow Elements
Tab 6 - Aircraft Warning Lights
Tab 7 - Stack Silencers

Valtek Spring Cylinder Linear Actuators

VOGT POWER INTERNATIONAL
V17491-COE-007-00
10-Jan-2017

GENERAL INFORMATION

The following instructions are designed to assist in installing, troubleshooting and servicing Valtek spring cylinder actuators. Product users and maintenance personnel should thoroughly review this bulletin prior to installing, operating or disassembling the actuator. Separate installation, operation and maintenance instructions cover additional features (such as handwheels, limit stops, fail-safe systems or limit switches).

This publication does not contain information on Flowserve positioners. Refer to the appropriate installation operation and maintenance instructions for installing, maintaining, troubleshooting, calibrating and operating Flowserve positioners.

To avoid possible injury to personnel or damage to valve parts, WARNING and CAUTION notes must be strictly followed. Modifying this product, substituting non-factory or inferior parts or using maintenance procedures other than outlined could drastically affect performance, void product warranties and be hazardous to personnel and equipment.

WARNING: Standard industry safety practices must be followed when working on this or any process control product. Specifically, personal protection and lifting devices must be used as warranted.

Unpacking

While unpacking the actuator, check packing list against materials received. Lists describing the actuator and accessories are included in each shipping container.

1. Position the lifting straps and hoists to avoid damage to the tubing and mounted accessories when lifting the actuator from the shipping container.

   WARNING: When lifting an actuator with lifting straps through the yoke legs, be aware the center of gravity may be above the lifting point. Therefore, support must be given to prevent the actuator from rotating or causing serious injury to personnel or damage to nearby equipment.

2. Contact your shipper immediately in the event of shipping damage.
3. Contact your Flowserve representative for any problems.

Installation

Prior to installation, make sure adequate overhead clearance for the actuator is provided to allow for proper removal from the valve body and for proper maintenance. Refer to Table 1.

NOTE: If the actuator is attached to a valve body assembly, see Installation, Operation, Maintenance Instructions 1 for overhead clearances.

Table 1:
Overhead Clearance for Disassembly

Actuator Size	Minimum Clearance
25	6 inches
50	8 inches
100,200,300 400,500,600	9 inches

1. Connect the air supply and instrument signal air lines to the two appropriately marked connections on the positioner. Since both the cylinder and positioner are suitable for 150 psi air supply, an air regulator should not be used unless the supply exceeds 150 psi.

   NOTE: *In some cases, air supply must be limited to 100 psi rather than 150 psi; this will be indicated by a sticker found near the upper air port on the cylinder.*

   WARNING: To avoid personal injury or equipment damage, do not exceed recommended supply pressure.
2. Installation of an air filter on the supply line is recommended.
3. Use a soap solution to make sure all air connections are leak free.

MAINTENANCE

At least once every six months, check for proper operation by following the preventative maintenance steps outlined below. These steps can be performed while the actuator is in service and, in some cases, without interrupting service. If an internal problem is suspected with the actuator, refer to the "Disassembly and Reassembly" section.

1. Examine the actuator for damage caused by corrosive fumes and process drippings.
2. Clean the actuator and repaint any areas of severe oxidation.
3. If possible, stroke the actuator and check for smooth, full-stroke operation.

   WARNING: To avoid serious injury, keep hands, hair and clothing away from all moving parts while operating the actuator.
4. Make sure positioner mounting bolts, linkage and stem clamp are securely fastened.
5. Ensure all accessories, brackets and associated bolting are securely fastened.
6. If possible, remove air supply and observe actuator for correct fail-safe action.
7. Check rubber bellows for wear.
8. Spray soap solution around the cylinder retaining ring, the adjusting screw and the lower actuator stem bushing to check for air leaks through the O-rings and gasket.
9. Clean any dirt or foreign material from the actuator stem.
10. If an air filter is supplied, check and replace cartridge as necessary.

DISASSEMBLY AND REASSEMBLY

Disassembling the Actuator

Refer to Figures 1 through 5 to disassemble the cylinder actuator.

1. Shut off air supply. If actuator is installed on a Flowserve valve, remove the valve per Installation Operation, Maintenance Instructions 1.

   WARNING: To avoid serious injury, depressurize the line to atmospheric pressure and drain all fluids before working on the actuator.
2. Disconnect all tubing. Remove stem clamp and stem bellows from the actuator stem.
3. Relieve spring compression completely by removing the adjusting screw. Remove adjusting screw gasket from adjusting screw.

   CAUTION: Do not use a screwdriver or bar to turn the adjusting screw; instead, use a wrench on the flats of the screw.

   WARNING: To avoid serious personal injury, relieve the spring compression before further disassembly. The cylinder could possibly fly off the yoke when removing the cylinder retaining ring.
4. Remove the cylinder retaining ring from the groove at the base of the cylinder by using two screwdrivers. Insert one screwdriver in slot found in the ring and pry the ring from the groove. Use the other screwdriver to help work the ring out of the cylinder groove.
5. Pull the cylinder off the yoke and piston; some O-ring resistance may be felt.

   WARNING: To avoid serious personal injury, do not use air pressure to remove the cylinder. The cylinder could possibly fly off the yoke.
6. For heavy-duty spring designs using a spring cap (see Figure 4), remove the spring cap and cap O-ring from the cylinder.
7. For air-to-retract configurations, remove the spring(s) and spring button for cleaning and inspection (see Figures 1, 3 and 5). Remove the actuator stem locknut and slide the piston and stem spacer off the actuator stem. The spring guide should be removed when using heavy-duty spring designs.

   NOTE: *The dual, heavy-duty spring configuration (Figure 3) has two springs, one inside the other. Remove both springs during this step.*

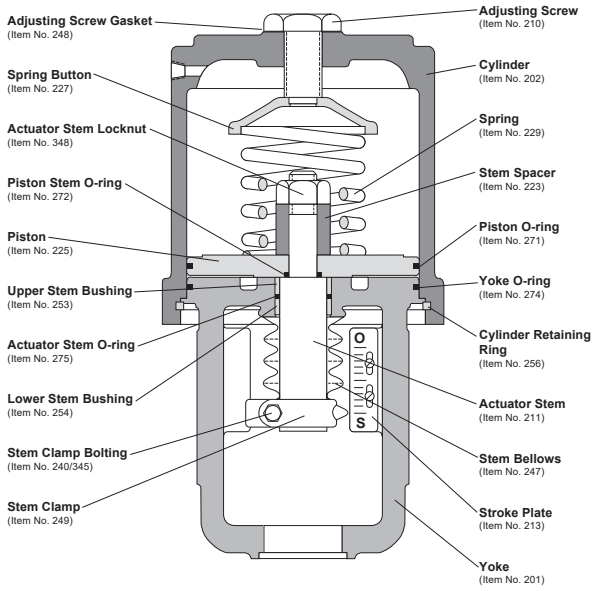

Figure 1: Air-to-retract Cylinder Actuator

NOTE: *Item numbers correspond directly to actuator's bill of material. Refer to it for specific part numbers.*

For air-to-extend configurations, slowly loosen and remove the actuator stem locknut. Be certain the piston follows the stem locknut up the actuator stem and does not bind on the actuator stem. Remove the actuator stem locknut, spring button, piston, spring and stem spacer.
WARNING: To avoid personal injury, be certain the spring force is completely relieved before removing actuator stem locknut.

8. Remove the piston O-ring, piston stem O-ring and yoke O-ring.
9. Remove the actuator stem O-ring.

   NOTE: *The upper and lower stem bushings are pressed into the yoke. Removal of the bushings to replace the actuator stem O-ring is unnecessary.*
10. Use appropriately sized press to push worn or damaged bushings out of yoke.

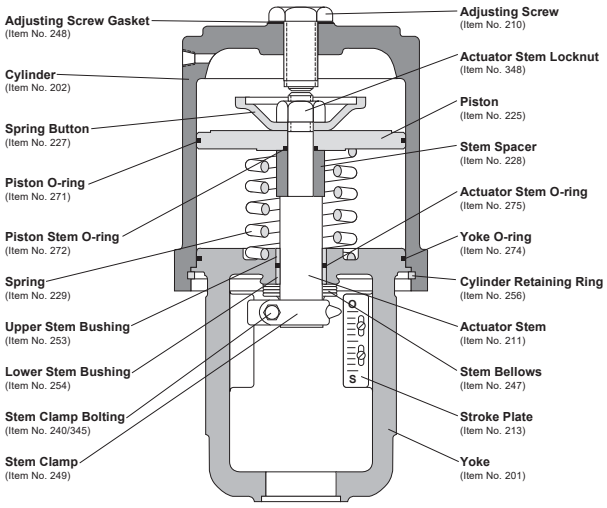

Figure 2: Air-to-extend Cylinder Actuator

NOTE: *Item numbers correspond directly to actuator's bill of material. Refer to it for specific part numbers.*

Reassembling the Actuator

To reassemble the cylinder actuator, refer to Figures 1 through 5:

1. All O-rings should be replaced. New O-rings should be lubricated with a silicone lubricant (Dow Corning 55M or equivalent). Silicone O-rings must be lubricated with Magnalube-G lubricant or equivalent. Do not use silicone lubricant on silicone O-rings.
2. Thoroughly clean all internal parts before beginning assembly. Lubricate cylinder wall with silicone lubricant.
3. Lubricate the outside of the replacement bushings if the stem bushings have been removed. Press a new lower stem bushing into the actuator stem bore in the yoke until it bottoms out. Press the upper stem bushing into the bore until it is flush with the top of the yoke (refer to Figures 1 or 2).
4. Replace the actuator stem O-ring and yoke O-ring.
5. Reassemble the piston, piston stem O-ring and stem spacer on the actuator stem according to the proper air-action (refer to either Figure 1 or 2). Replace the piston O-ring. Air-to-extend configurations require the spring button to be stored under actuator stem locknut. Tighten the locknut firmly.

   NOTE: *When reassembling heavy-duty, spring-design actuators, the spring guide must be first inserted under the actuator stem locknut (see Figures 3 and 4).*

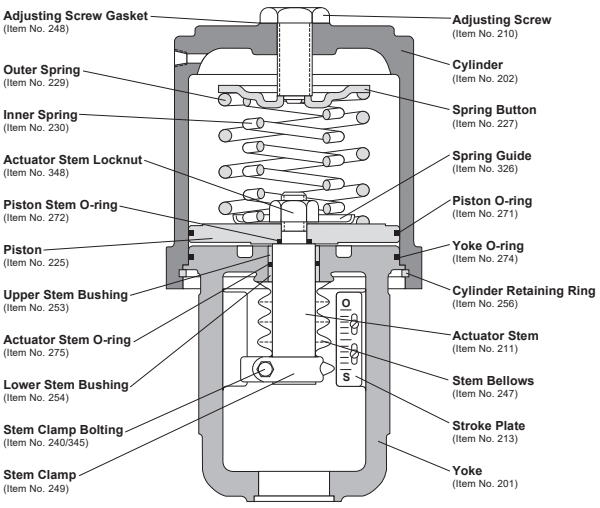

Figure 3: Dual-spring Cylinder Actuator

NOTE: *Item numbers correspond directly to actuator's bill of material. Refer to it for specific part numbers.*

6. For air-to-extend configurations, place the spring under the piston and insert the actuator stem through the yoke, being careful not to pinch the actuator stem O-ring or gall the stem and stem bushings. For air-to-retract configurations, insert the actuator stem through the yoke and place the spring(s) and spring button above the piston.
7. Replace the cap O-ring and install the spring cap in the cylinder when using heavy-duty spring designs using spring caps (see Figure 4).
8. Install the cylinder, making sure the yoke is pushed deeply enough into the cylinder to allow the cylinder retaining ring to be installed. Care should be taken not to scar or cut the piston and yoke O-rings.
9. Reinsert the cylinder retaining ring by until it snaps in place. Use a hammer and drift punch to lightly tap the retaining ring in the groove.

   WARNING: To avoid personal injury, the cylinder retaining ring must be solidly in place. The cylinder could possibly fly off when pressurized. Be careful not to pinch or cut fingers on the square edges of the retaining ring during installation.
10. Reinstall the adjusting screw using a new adjusting screw gasket.

    NOTE: *Be certain the hole in the spring button is directly centered under the adjusting screw hole in the cylinder on air-to-retract configurations.*

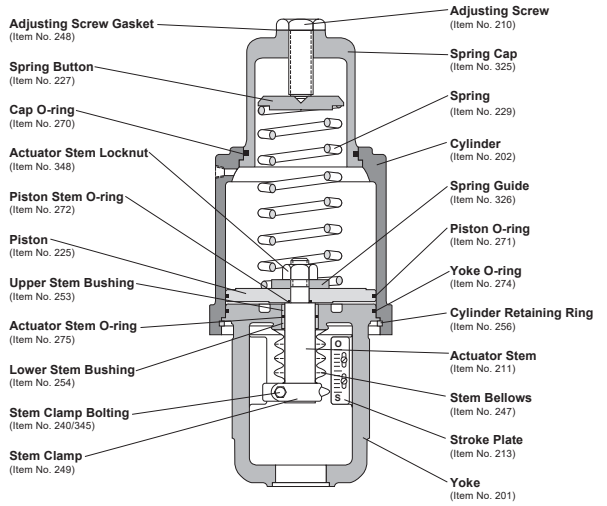

Figure 4: Cap-spring Cylinder Actuator

NOTE: *Item numbers correspond directly to actuator's bill of material. Refer to it for specific part numbers.*

11. Tighten the adjusting screw enough to provide an air seal with the gasket. Do not overtighten.
12. Reinstall the stem bellows and stem clamp.

    NOTE: *To ensure maximum clamping strength when installing the stem clamp, make sure the stem clamp bolting is perpendicular to one of the slots machined into the actuator stem.*
13. Apply air over the piston. Tighten the stem clamp bolting with the stem clamp adjusted to point at the closed position of the stroke indicator plate.

    NOTE: *If the actuator is installed on a Flowserve valve, refer to Installation, Operaton, Maintenance Instructions 1 for correct plug stem thread engagement.*
14. Reconnect tubing, supply and signal lines.

Reversing the Air-action

To change the air action from air-to-retract to air-to extend, or vice versa, refer to Figures 1, 2 or 5:

NOTE: *Heavy-duty spring actuators are not reversible.*

1. Disassemble the actuator according to the "Disassembling the Actuator" section.
2. For air-to-retract action, reassemble the actuator with stem spacer and spring button over the piston.
3. For air-to-extend action, reassemble with spring and stem spacer below the piston and with the spring button stored above the piston.
4. Reassemble the actuator according to the "Reassembling the Actuator" section.
5. The positioner must also be reversed. See the appropriate positioner maintenance instructions.

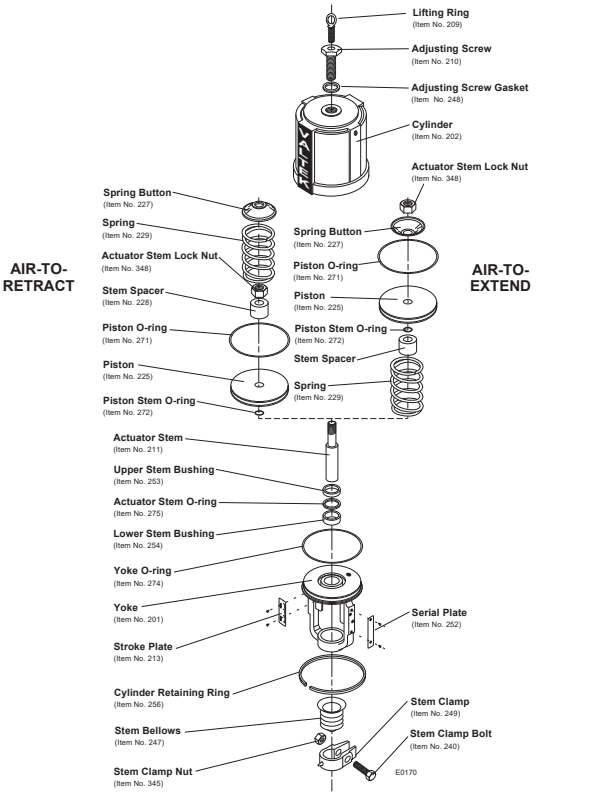

Figure 5: Exploded View, Spring Cylinder Actuator

NOTE: *Item numbers correspond directly to actuator's bill of material. Refer to it for specific part numbers.*

Troubleshooting

Problem	Probable Cause	Corrective Action
High air consumption or leakage	1. Leaks in the air supply or instrument signal system 2. Malfunctioning positioner 3. Leaks through O-rings or adjusting screw gasket	1. Tighten connections and replace any leaking lines 2. Refer to appropriate positioner maintenance bulletin 3. Replace O-rings or gasket
Actuator does not move to fail position upon loss of air supply pressure	1. Air pressure in cylinder not venting because of faulty positioner 2. Spring failure 3. Internal valve problem	1. Refer to appropriate positioner maintenance bulletin 2. Replace spring 3. Refer to valve's maintenance bulletin
Jerky or sticking stem travel	1. Insufficient air supply pressure 2. Unlubricated cylinder wall 3. Worn or damaged stem bushings 4. Improperly assembled spring 5. Internal valve problem	1. Check air supply and any filters or regulators; check for leaking O-rings 2. Lubricate cylinder wall with silicone lubricant 3. Check actuator stem for damage; replace actuator stem, O-ring, and stem bushings, if necessary 4. Disassemble actuator and check cylinder and piston for damage; reassemble actuator correctly 5. Refer to valve's maintenance instructions

Flowserve Corporation has established industry leadership in the design and manufacture of its products. When properly selected, this Flowserve product is designed to perform its intended function safely during its useful life. However, the purchaser or user of Flowserve products should be aware that Flowserve products might be used in numerous applications under a wide variety of industrial service conditions. Although Flowserve can (and often does) provide general guidelines, it cannot provide specific data and warnings for all possible applications. The purchaser/user must therefore assume the ultimate responsibility for the proper sizing and selection, installation, operation and maintenance of Flowserve products. The purchaser/user should read and understand the Installation Operation Maintenance (IOM) instructions included with the product, and train its employees and contractors in the safe use of Flowserve products in connection with the specific application.
While the information and specifications presented in this literature are believed to be accurate, they are supplied for informative purposes only and should not be considered certified or as a guarantee of satisfactory results by reliance thereon. Nothing contained herein is to be construed as a warranty or guarantee, express or implied, regarding any matter with respect to this product. Because Flowserve is continually improving and upgrading its product design, the specifications, dimensions and information contained herein are subject to change without notice. Should any question arise concerning these provisions, the purchaser/user should contact Flowserve Corporation at any of its worldwide operations or offices.

For more information, contact:

For more information about Flowserve and its products, contact www.flowserve.com or call USA 972 443 6500

Regional Headquarters

1350 N. Mt. Springs Prkwy.
Springville, UT 84663
Phone 801 489 8611
Facsimile 801 489 3719

12 Tuas Avenue 20
Republic of Signapore 638824
Phone (65) 862 3332
Facsimile (65) 862 4940

12, av. du Québec, B.P. 645
91965, Courtaboeuf Cedex, France
Phone (33 1) 60 92 32 51
Facsimile (33 1) 60 92 32 99

Quick Response Centers

5114 Railroad Street
Deer Park, TX 77536 USA
Phone 281 479 9500
Facsimile 281 479 8511

104 Chelsea Parkway
Boothwyn, PA 19061 USA
Phone 610 497 8600
Facsimile 610 497 6680

1300 Parkway View Drive
Pittsburgh, PA 15205 USA
Phone 412 787 8803
Facsimile 412 787 1944

Flowserve and Valtek are registered trademarks of Flowserve Corporation.

FCD VLAIM002-15 ©1999 Flowserve Corporation. Flowserve Corporation, Valtek Control Products, Tel. USA 801 489 8611

FLOWSERVE

USER INSTRUCTIONS

Valtek Mark One and
Mark Two Control Valves

Installation
Operation
Maintenance

VOGT POWER INTERNATIONAL
V17491-ICXE-510-00
12-Jan-2017

Experience in Motion

Contents

1. General Information
2. Unpacking
3. Installation
4. Quick Check
5. Valve Maintenance
6. Disassembly and Inspection
7. Assembly and Installation
8. Severe Service Trim Options
8.1. CavControl
8.2. ChannelStream
8.3. MegaStream
8.4. Stealth
8.5. TigerTooth

Figures
Figure 1 – Mark One Control Valve Body Assembly
Figure 2 – Pressure Balanced Mark One Control Valve Body Assembly
Figure 3 – Exploded View Mark One Body Assembly
Figure 4 – Soft Seat Assembly
Figure 5 – Actuator Stem / Stem Clamp Alignment
Figure 6 – Mark One with CavControl Trim Body Assembly
Figure 7 – Mark One with ChannelStream Trim Body Assembly
Figure 8 – Mark One with MegaStream Trim Body Assembly
Figure 9 – Mark One with Stealth Trim Body Assembly
Figure 10 – Mark One with TigerTooth Trim Body Assembly

Tables
Table I – Common Lubricants
Table II – Suggested Bonnet Bolting Torque Values
Table III – Troubleshooting Chart

1. General Information

1.1. Using
The following instructions are designed to assist in unpacking, installing and performing maintenance as required on Flowserve products. Product users and maintenance personnel should thoroughly review this bulletin prior to unpacking, installing, operating, or performing any maintenance. In most cases, Flowserve valves, actuators and accessories are designed for specific applications (e.g. with regard to medium, pressure, and temperature). For this reason, they should not be used in other applications without first contacting the manufacturer. The product Installation, Operation, and Maintenance Instructions provides important additional safety information.

1.2. Applicability
The following instructions are applicable to the maintenance and installation of Flowserve Valtek Mark One and Two control valves. These instructions cannot claim to cover all details of all possible product variations, nor can they provide information for every possible example of installation, operation or maintenance. This means that the instructions normally include only the directions to be followed by qualified personal using the product for its defined purpose. If there are any uncertainties in this respect, particularly in the event of missing product-related information, clarification must be obtained via the appropriate Flowserve sales office. All Flowserve User Manuals are available at www.flowserve.com.

1.3. Terms Concerning Safety
1.3.1. The safety terms **DANGER, WARNING, CAUTION and NOTE** are used in these instructions to highlight particular dangers and/or to provide additional information on aspects that may not be readily apparent.

DANGER: Indicates that death, severe personal injury and/or substantial property damage will occur if proper precautions are not taken.

WARNING: Indicates that death, severe personal injury and/or substantial property damage can occur if proper precautions are not taken.

CAUTION: Indicates that minor personal injury and/or property damage can occur if proper precautions are not taken.

NOTE: Indicates and provides additional technical information, which may not be obvious, even to qualified personnel.

1.3.2. Compliance with other notes, which may not be particularly emphasized, with regard to transport, assembly, operation and maintenance and with regard to technical documentation (e.g. in the operating instructions, product documentation, or on the product itself) is essential, in order to avoid faults, which can directly or indirectly cause severe personal injury or property damage.

1.4. Protective Clothing
DANGER: Flowserve products are often used in problematic applications (e.g. under extremely high pressures with dangerous, toxic or corrosive mediums). When performing service, inspection, or repair operations, always ensure that the valve and actuator are depressurized and that the valve has been cleaned and is free from harmful substances. In such cases, pay particular attention to personal protection (e.g. protective clothing, gloves, glasses etc.).

1.5. Qualified Personnel
Qualified personnel are people who, on account of their training, experience and instruction and their knowledge of relevant standards, specifications, accident prevention regulations and operating conditions, have been authorized by those responsible for the safety of the plant to perform the necessary work and who can recognize and avoid possible dangers. Contact your local Flowserve representation for a schedule of training schools.

1.6. Spare Parts
Use only Flowserve original spare parts. Flowserve cannot accept responsibility for any damages that occur from using spare parts or fastening materials from other manufactures. If Flowserve products (especially sealing materials) have been on store for long periods of time check them for corrosion or deterioration before putting them into use.

1.7. Service / Repair
To avoid possible injury to personnel or damage to products, safety terms must be strictly adhered to. Modifying this product, substituting non-factory parts, or using maintenance procedures other than those outlined in these Installation, Operation, and Maintenance Instructions could drastically affect performance, be hazardous to personnel and equipment, and may void existing warranties. Between the actuator and the valve there are moving parts. To avoid injury, Flowserve provides pinch-point-protection in the form of cover plates, especially where side-mounted posi-

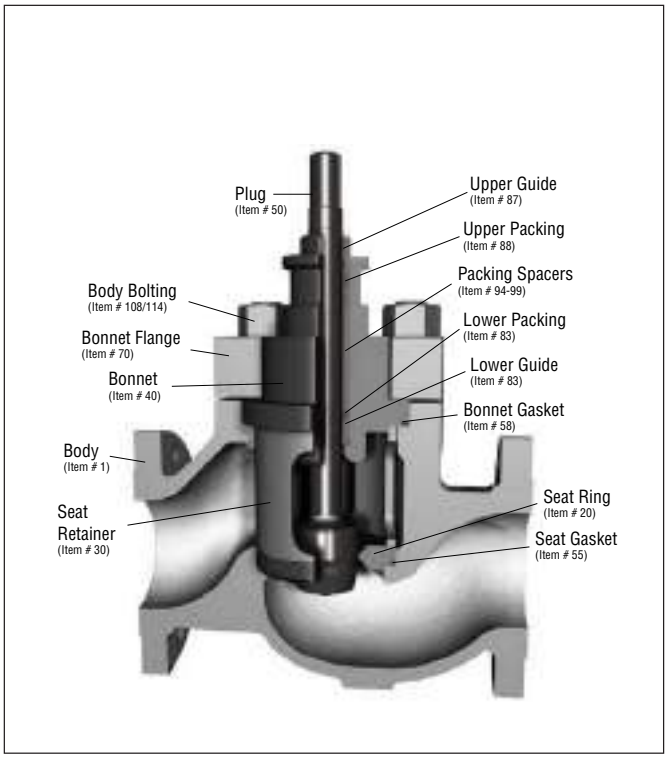

Figure 1: Mark One Control Valve Body Assembly

tioners are fitted. If these plates are removed for inspection, service or repair special attention is required. After completing work the cover plates must be refitted. Apart from the operating instructions and the obligatory accident prevention directives valid in the country of use, all recognized regulations for safety and good engineering practices must be followed.

WARNING: Before products are returned to Flowserve for repair or service, Flowserve must be provided with a certificate that confirms that the product has been decontaminated and is clean. Flowserve will not accept deliveries if a cleaning certificate has not been provided. Return authorization is also required before parts are returned. Contact your local Flowserve representative to obtain return authorization.

1.8. Storage
In many cases, Flowserve products are manufactured from stainless steel. Products not manufactured from stainless steel are provided with an epoxy resin coating. This means that Flowserve products are well protected from corrosion. Nevertheless, Flowserve products must be stored adequately in a clean, dry environment. Plastic caps or plywood protectors are fitted to help protect the flange faces and prevent the ingress of foreign materials. These caps should not be removed until the valve is actually mounted into the system.

2. Unpacking

2.1. While unpacking the valve, check the packing list against the materials received. Lists describing the valve and accessories are included in each shipping container.

2.2. When lifting the valve from shipping container, use straps through the yoke legs, or the lifting lugs attached to the body bolting for valves over four inch, or the adjusting screw for valves four inch and under. Take care to position lifting straps to avoid damage to the tubing, mounted accessories, or stroke plate.

WARNING: When lifting a valve be aware that the centre of gravity may be above the lifting point. Therefore, support must be given to prevent the valve from rotating. Failure to do so can cause serious injury to personnel and damage to the valve and nearby equipment.

2.3. Contact your shipper immediately if there is shipping damage.

2.4. Should any problem arise, call your Flowserve representative.

3. Installation

DANGER: Before installation check the purchase order number, serial number, and/or the tag number to ensure that the valve and actuator being installed are correct for the intended application.

WARNING: The maximum air supply for most Valtek cylinder actuators is 150 psi (10.3 bar). In some cases, the air supply must be limited to less than 150 psi (10.3 bar). This is indicated on a sticker found near the upper air port on the actuator cylinder. An air regulator should be installed to ensure the supply pressure does not exceed the actuator design pressure indicated on the sticker.

CAUTION: Do not insulate extensions that are provided for hot or cold services.

CAUTION: On valves equipped with air filters, the air filter must point down to perform properly.

NOTE: Selecting the proper fastener material is the responsibility of the customer. Typically, the supplier does not know what the valve service conditions or environment may be. Flowserve's standard body bolting material is B7/2H. B8/8 (stainless steel) is optional for applications more than 800° F / 425° C and with stainless steel or alloy body valves. The customer therefore must consider the material's resistance to stress corrosion cracking in addition to general corrosion. As with any mechanical equipment, periodic inspection and maintenance is required. For more information about fastener materials, contact your Flowserve representative.

3.1. Pipelines must be correctly aligned to ensure that the valve is not fitted under tension.

3.2. Fire protection must be provided by the user.

3.3. Before installing the valve, clean the line of dirt, welding chips, scale and other foreign material.

3.4. Whenever possible, the valve should be installed in an upright position. Vertical installation permits easier valve maintenance. This is also important for cryogenic applications to keep the packing isolated from the flowing medium, permitting the packing temperature to remain close to ambient temperature.

3.5. Be sure to provide proper overhead clearance for the actuator to allow for disassembly of the plug from the valve body. Refer to the appropriate actuator User Instructions for proper clearances. Actuator User Instructions are available at www.flowserve.com.

3.6. Double-check flow direction to be sure the valve is installed correctly. Flow direction is indicated by the arrow attached to the body.

3.7. If welding the valve into the line, use extreme care to avoid excess heat buildup in the valve.

Figure 2: Pressure Balanced Mark One Control Valve Body Assembly

3.8. If the valve has separable end flanges, verify that the half rings are installed on the valve body before bolting the valve into the line.

WARNING: Failure to install half rings on the valve body can cause serious personal injury.

3.9. Connect the air supply and instrument signal lines. Throttling control valves are equipped with a valve positioner. Refer to the appropriate positioner bulletin for connections, maximum air supplies, and maintenance instructions. An air filter should be installed before the positioner. All connections must be free of leaks.

CAUTION: On valves equipped with air filters, the air filter must point down to perform properly.

4. Quick-check

Prior to start-up, check the control valve by following these steps:

4.1. Stroke the valve and observe the plug position indicator on the stem clamp compared to the stroke indicator plate. The plug should change position in a smooth, linear fashion.

NOTE: Due to excessive friction a dry graphite packing can cause the plug stem to move in a jerky fashion. Lubrication of graphite packing will provide smoother stroking. Lubrication can be done by using a bonnet lubricator or by liberally coating each packing ring by hand during installation. Please refer to Table I for lists of common lubricants.

WARNING: Keep hands, hair and clothing away from all moving parts when operating the valve. Failure to do so can cause serious injury.

4.2. Check for full stroke by making appropriate instrument signal changes.

4.3. Check all air connections for leaks.

4.4. Check packing box bolting for the correct adjustment. Refer to the packing installation manual for specific details on maintaining the style of packing supplied.

CAUTION: Do not overtighten packing. This can cause excessive packing wear, high stem friction that may impede plug movement and can damage the packing. Over-tightening packing will not improve the stem seal unless the packing has been previously damaged. Damaged packing should be replaced.

4.5. Make sure the valve fails in the correct direction in case of air failure. This is done by turning off the air supply and observing the failure direction.

5. Valve Maintenance

At least once every six months, check for proper operation by following the preventative maintenance steps outlined below. These steps can be performed while the valve is in-line and, in some cases, without interrupting service. If an internal problem is suspected, refer to Section 6, Valve Disassembly and Inspection.

5.1. Look for signs of gasket leakage through the end flanges and bonnet. Re-torque flange and bonnet bolting (if required). Refer to Table II for bonnet bolt torque values.

5.2. Examine the valve for damage caused by corrosive fumes or process drippings.

5.3. Clean valve and repaint areas of severe oxidation.

5.4. Check packing box bolting for proper tightness and packing leakage. If packing leakage is noticed, packing maintenance is required. Refer to the packing installation manual (document number VLAIM040) for specific details on maintaining the style of packing supplied.

CAUTION: Do not overtighten packing. This can cause excessive packing wear and high stem friction that may impede stem movement. Packing that is tightened too tight will typically not seal correctly.

5.5. If the valve is supplied with a lubricator fitting, check lubricant supply and add lubricant if necessary. See Table I for common lubricants.

5.6. If possible, stroke the valve and check for smooth, full-stroke operation. Unsteady stem movement could indicate an internal valve problem.

NOTE: Due to excessive friction a dry graphite packing can cause the plug stem to move in a jerky fashion. Lubrication of graphite packing will provide smoother stroking. Lubrication can be done by using a bonnet lubricator or by liberally coating each packing ring by hand during installation. Please refer to Table I for lists of common lubricants.

WARNING: Keep hands, hair and clothing away from all moving parts when operating the valve. Failure to do so can cause serious injury.

5.7. Make sure positioner linkage and stem clamp are securely fastened. If the stem clamp is loose, check plug thread engagement (refer to the "Reassembly and Installation" section for the correct procedure on aligning the plug with the seat). Tighten stem clamp nut.

NOTE: Refer to the appropriate User Manuals when adjusting positioners and providing maintenance to actuators.
Current User Manuals are available at www.flowserve.com.

5.8. Verify that the takeoff arm and follower arm are not binding at either end of the stroke. The follower arm attached to the positioner should be free to move slightly when the valve is at both ends of the stroke.

5.9. Ensure all accessories, brackets and bolting are securely fastened.

5.10. If possible, remove air supply and observe actuator for correct fail-safe action.

5.11. Check rubber actuator bellows for splits, cuts or wear.

5.12. Spray a soap solution around the actuator cylinder retaining ring and actuator stem guide to check for air leaks through the O-rings.

5.13. Clean any dirt and other foreign material from the plug stem.

5.14. If an air filter is supplied, check and replace cartridge if necessary. Drain any moisture accumulated in the air filter.

Table I: Common Packing Lubricants

Lubricant	Manufacturer	Temperature Range		Application Description
		°F	°C	
Krytox®	E.I DuPont	-5 to 550	-20 to 285	Fluorinated general purpose grease; handles common liquids and gasses; good lubricity in harsh mediums; nonflammable, chemically inert; will not harm plastic or metal parts
GP 460	Acheson Colloids Company	32 to 1000	0 to 540	Graphite in petrolatum; high pressure; anti-galling; graphite remains above 600°F / 316°C
725	Chesterton	32 to 2600	0 to 1425	Nickel, Aluminum and graphite in oil suspension;provides protection with an ultra-thin coating of nickel particles

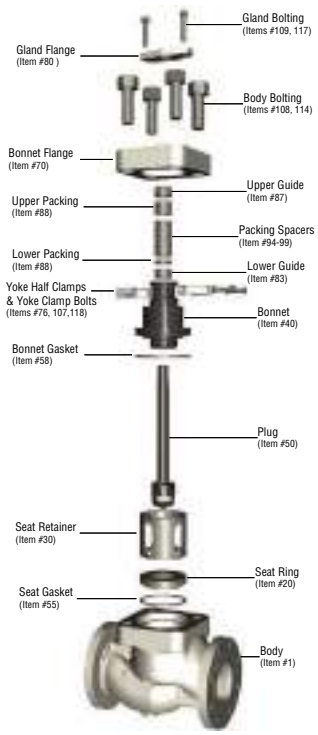

Figure 3: Exploded View Mark One Body Assembly

6. Valve Disassembly

6.1. To disassemble the valve body, refer to Figures 1, 2 and 3 then proceed as follows:

WARNING: Depressurize line to atmospheric pressure and drain all fluids before working on the valve. Failure to do so can cause serious injury.

6.2. If valve is air-to-open, apply air under the piston to lift the plug off the seat before taking the valve apart. If valve is air-to-close, proceed to step 6.3.

6.3. Remove the bonnet flange bolting and lift actuator, bonnet and plug out of the valve. Once removed, the actuator, bonnet and plug assembly (called the top works) should be lowered and blocked to prevent rolling during the disassembly of the top works.

WARNING: Danger exists in removing the actuator, bonnet and plug, especially if a pressure balanced plug is used. The pressure balanced sleeve may stick to the plug and fall during disassembly, causing possible serious injury and damage to the valve or nearby equipment. If sleeve is observed sticking to the plug, steps 6.3.1 to 6.3.4 should be consulted.

CAUTION: Heavy actuators may require a hoist. Lift the valve with the yoke legs using a lifting strap and a hoist. Great care should be taken to lift the actuator and plug straight out of the body to avoid damage to the plug and seat.

6.3.1. If the sleeve is observed sticking to the plug during removal, fully extend the plug by applying air above the piston, allowing the sleeve to remain in the body and the bonnet to rise above the body.

6.3.2. In the gap between the top of the sleeve and the bottom of the bonnet, place wooden blocking of equal thickness in at least three places. The wooden blocks must not extend in far enough that they interfere with plug movement. The plug must be allowed to stroke up to the bonnet.

6.3.3. By applying air below the piston, retract the plug until the plug head is freed from the sleeve. Once the plug is free from the sleeve, remove the plug and bonnet assembly from the body.

6.3.4. Lift the pressure balanced sleeve out of the valve body using lifting points on the top of the sleeve.

NOTE: In many small Mark One valves, the seat retainer and pressure balancer sleeve are one and the same part. In larger valves, there are separate pressure balancer sleeves and seat retainers.

6.4. Lift retainer, seat ring and gaskets free of the body. Care must be taken not to damage the gasket surfaces in the body when the gaskets are removed.

6.5. Valves with soft seats (see figure 4) require the seat ring to be inspected and possibly disassembled. Check to see that seating surfaces on the plug and seat assemblies are free of damage. If the seat insert is worn, remove it from the assembly. Since the plug seating surface does not come in contact with the seat insert retainer, it is not necessary to correct any minor damage to that part. The plug seating surface can be re-machined to a 30 degree angle. Lapping is not required when proper reassembly procedures are followed.

6.6. Loosen the stem clamp and unscrew the plug from the actuator stem.

WARNING: Danger exists when working with large valves and heavy parts. Take care to properly support large parts to avoid damage to the parts of nearby equipment or personnel.

6.7. Remove the packing gland bolting, yoke clamps and remove the actuator.

6.8. If the seat surfaces need re-machining, both surfaces on plug and seat ring must be reworked. The seat angle on the plug is 30 degrees (36 degrees for Cav-Control and ChannelStream valves); the seat ring, 33 degrees. Lapping is not necessary if proper assembly procedures are followed.

CAUTION: If re-machining, protect the stem while turning. Ensure concentration of the seat surface with the plug stem (or outside diameter of the seat ring, if machining the seat).

6.9. To replace packing or change the packing box configuration, push out packing, spacer and guides from underneath the bonnet with a dowel around 0.13 inch (3.3 mm) larger in diameter than the plug stem.

Table II: Suggested Bonnet Bolting Torque Values

Bolt Size (inches)	Bolt/Stud Material			
	Carbon Steel		Stainless Steel	
	ft-lbs	Nm	ft-lbs	Nm
5/8	80	108	50	68
3/4	140	190	90	122
7/8	230	312	150	203
1	350	475	220	298
1 1/8	510	691	330	447
1 1/4	730	990	460	624
1 3/8	990	1342	630	854
1 1/2	1320	1790	840	1139
1 5/8	1710	2318	1080	1464
1 3/4	2170	2942	1400	1898
1 7/8	2700	3661	1700	2305
2	3350	4542	2100	2847

* All values are ±10%

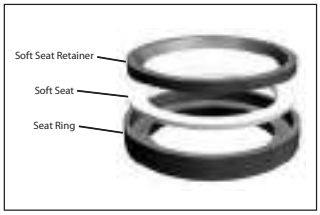

Figure 4: Soft Seat Assembly

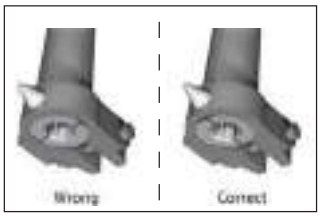

Figure 5: Actuator Stem / Stem Clamp Alignment

WARNING: For valves equipped with separable end flanges, do not machine body gasket surfaces. Machining could cause failure of the separable flange lip causing end gasket leakage and valve failure.

CAUTION: When using separable end flanges and spiral wound gaskets, use gaskets with outer backup rings. Failure to do so could result in excess stress in some applications.

6.10. Check to see the seating surfaces on both the seat ring and plug are free of damage to ensure tight shutoff. Make sure the gasket surfaces on the seat ring, bonnet and body are clean and undamaged. Examine the plug stem and bonnet bore for scoring, scratches, pitting or other damage.

6.11. Refer to the appropriate actuator User Manual for detailed instructions on actuators.

7. Assembly and Installation

NOTE: Separate User Manuals with instructions on assembling actuators, positioners and other equipment can be found on www.flowserve.com. Review any relevant User Manual before proceeding

NOTE: It is recommended that all soft goods are replaced when rebuilding Mark One and Two control valves. Soft goods include gaskets, pressure balanced seals, soft seat inserts, guide liners and packing seats. Replacing these parts helps to ensure proper functioning of the control valve.

7.1. To reassemble the valve body, refer to figures 1, 2 and 6 thru 9 and proceed as follows:

7.2. If the packing has been removed, refer to the appropriate packing User Manual (document number VLAIM040) and reinstall the packing and lower guide exactly as shown. Make sure at least 1/8 inch is left at the top of the packing box for the top guide to sit into the bonnet. Different packing spacers permit a wide variety of packing configurations, such as twin seal and vacuum-pressure packing.

CAUTION: Valves with extended bonnets or metal bellows seals must not have lower packing installed. Instead, lower packing rings should be installed with the upper set. Lower packing installed in extended bonnets or metal bellows seal valves will diminish the integrity of the packing assembly.

NOTE: Guide liners should be replaced each time the valve packing is replaced. Do not rebuild the valve without the correct guide liners.

7.3. Re-insert the plug stem into the packing box, being careful not to score the plug stem or the guides. Reinstall pressure balanced seals if required.

7.4. Turn actuator back onto the plug, without turning the plug inside the bonnet. Make sure the gland flange and bonnet flange are in place before engaging the plug stem and actuator stem threads. The gland flange

chamfer must be face down towards the valve body. Leave approximately three to four plug stem threads exposed. Attach yoke clamp and gland flange bolting. For valves with a 2-inch spud, be sure the half rings are in place between the yoke and bonnet. Firmly tighten yoke clamp bolting. The packing box nuts should be just over finger tight.

NOTE: Do not allow the gland flange to contact and gall the polished plug stem.

7.5. Install new bonnet and seat gaskets with the bevelled edge up for Teflon gaskets.

7.6. Insert the seat ring into the body with the step side down. When the seat ring is properly in place it will turn easily in the body. Place the seat retainer into the body with the thin end of the cathedral window down. Most retainers have an arrow pointing up to verify correct installation. For pressure balanced valves, install the pressure balanced sleeve gasket. Ensure that severe service retainers are correctly indexed by turning the retainer in the body. Correctly aligned retainers should turn easily.

CAUTION: Installing seat retainers upside down can damage the control valve parts.

CAUTION: Seat rings, retainers and pressure balanced sleeves must be installed squarely into the body to function correctly. To check to make sure the parts are installed correctly, rotate these parts a little by hand. The parts should rotate freely without binding.

NOTE: When the seat retainer has only two ports, one of the two ports should be aligned with the upper port of the body.

7.7. Place air under the actuator piston on air-to-open valves to retract the plug.

7.8. Lower the plug and bonnet squarely into the body. Be careful not to scratch or gall the plug as it enters the body.

7.9. To properly align the seat ring and plug, first bring the bonnet bolting to finger-tightness.

7.9.1. With pneumatic actuators, apply air pressure above the piston to seat the plug in the seat ring. Proceed to step 7.10.

7.9.2. With electric or hydraulic actuators, move the actuator stem down until it is completely extended. Next, retract the actuator stem 1/8 inch (3.2 mm). Install the stem clamp onto the plug stem and actuator stem and tighten the associated bolting. Move the actuator stem completely down. Adjust actuator limit switches according to the actuator's operating manual. The actuator limit switches will need to be readjusted once the body bolting has been tightened.

NOTE: Step 7.10 applies only to valves with pneumatic actuators. If an electric or hydraulic actuator is used, return the plug to the mid-stroke position and proceed to tighten.

CAUTION: Failure to return the plug to a mid-stroke position (electric or hydraulic operators only) will cause damage to the actuator and / or the valve during the bonnet tightening sequence. This is due to the inability of most electric / hydraulic actuators to accommodate the 1/16 inch / 1.60 mm back-drive during the tightening sequence.

7.10. For air-to-close valves, skip this step and go to step 7.11. For air-to-open valves, check for proper plug seating as follows: When proper seating occurs, the bonnet flange will be forced up against the finger-tight body bolting with such force that it will be impossible to move the flange. If proper seating does not occur, the bonnet flange can be wiggled with light hand force for small valves and light wrench force for larger valves. Should this occur, place air under the actuator piston and retract the actuator to approximate mid-stroke position. Turn the plug out of the actuator plug stem one additional thread and repeat above seating procedure. When the bonnet flange becomes tight against the finger-tight body bolting, the plug is properly seated. If necessary, repeat above procedure until proper seating occurs.

7.11. Stroke the valve open and closed several times to center the seat ring. Retract the plug (open position). Begin tightening the bonnet flange bolting in a manner that will keep the bonnet flange square / parallel with the body. Tighten the first bolt 1/6 turn, or one nut flat, then tighten the bolt directly opposite 1/6 turn and so on around the flange. Firmly tighten all bolts evenly and completely to compress the bonnet gasket and to seat the bonnet. Torque the bonnet bolts to the suggested torque values in Table II. The bonnet will seat metal to metal with the body when the bonnet bolts are correctly torqued into place

7.12. Apply air over the piston to seat the plug. For all throttling valves, adjust the stem clamp so that with full instrument signal to the positioner the full signal scribe line on the positioner cam points to the centre of the cam roller bearing.

CAUTION: Make sure the slots of the stem clamp are perpendicular to the bolting. See Figure 5.

NOTE: For on / off valves, the bottom of the stem clamp should simply be lined up with the bottom of actuator stem ± 1/16 inch (1.6 mm).

7.13. Tighten the stem clamp bolting. Proper tightness is important since this adjustment secures the actuator stem to the plug stem. Adjust the stroke plate so the stem clamp points to the "closed" position.

7.14. If the valve has been taken out of the line, make sure the flow arrow indicates proper flow direction upon reinstallation.

7.15. Adjust and test all accessories.

Figure 6
Mark One with CavControl Trim Body Assembly

Figure 7
Mark One with ChannelStream Trim Body Assembly

8. Severe Service Trim Options

8.1. CavControl

8.1.1. CavControl replaces the standard Mark One retainer with a drilled, stepped-hole retainer, see Figure 6. The plug and bonnet have dimensional differences from the standard Mark One design. Assembly and disassembly of the valve follows the standard procedures.

8.1.2. CavControl retainers, plugs and seats should be examined for excessive cavitation damage when disassembled. Holes in the retainer should be checked for worn or eroded surfaces. Check for plugged holes in the retainer. Plugs and retainer mating surfaces should be examined for damage. Repair and replacement of damaged parts is critical to maintaining cavitation resistance.

⚠ **CAUTION**: To function properly, CavControl is always installed flow over.

8.2. ChannelStream

8.2.1. ChannelStream replace the standard retainer with multiple sleeves pinned together, see Figure 7. The plug, seat ring, and bonnet have dimensional differences from the standard Mark One design. Assembly and disassembly of the valve follows the standard procedures.

8.2.2. ChannelStream retainers, plugs and seats should be examined for excessive cavitation damage when disassembled. The inner holes in the retainer should be checked for wear or erosion, evidence of erosion should require that the retainer is disassembled. Plugs and retainer mating surfaces should be examined for damage. Repair and replacement of damaged parts is critical to maintaining cavitation resistance.

8.2.3. ChannelStream retainers should be cleaned of debris whenever the valve is opened.

8.2.4. Use the following steps if the retainer must be disassembled to clean or inspect for damage. ChannelStream retainers in pressure classes 900 and higher cannot be disassembled in the field. Contact your local Flowserve representative for service options.

8.2.4.1. Carefully grind away the small bead welds located on the assembly pins near the top of the retainer. This will loosen the pins which hold the retainer together. Using a punch, locate the hole in the retainer opposite the pin and drive each pin out of the retainer.

8.2.4.2. The retainer can now be inspected for damage or cleaned.

8.2.4.3. Reassemble the retainer sleeves and reinstall the pins making sure to leave an open hole opposite each pin so that the pin can be driven out in the future. Apply a small (1/8 inch) bead of weld to each pin to hold it in place.

! **NOTE**: Do not weld more than the approved 1/8 inch. Excessive heat from the bead welds that are too large can disturb critical retainer tolerances. Use an appropriate weld rod which is compatible with the retainer material. If uncertain, contact the factory.

⚠ **CAUTION**: To function properly, ChannelStream is always installed flow over.

Figure 8
Mark One with MegaStream Trim Body Assembly

Figure 9
Mark One with Stealth Trim Body Assembly

8.3. MegaStream

8.3.1. MegaStream replaces the standard Mark One retainer with a drilled hole retainer, see Figure 8. The plug and bonnet are typically identical to the standard Mark One design. Assembly and disassembly of the valve follows the standard procedures.

8.3.2. MegaStream retainers, plugs and seats should be examined for damage when disassembled. Holes in the retainer should be checked for worn or eroded surfaces. Check for plugged holes in the retainer. Multi-stage MegaStream retainers cannot be disassembled. Repair and replacement of damaged parts is critical to maintaining noise control.

⚠ **CAUTION**: To function properly, MegaStream is always installed flow under.

8.4. Stealth

8.4.1. Stealth replaces the standard Mark One retainer with a braised, stacked-disk retainer, see Figure 9. Several of the parts, including the plug, seat ring and bonnet have dimensional differences from the standard Mark One design. Assembly and disassembly of the valve follows the standard procedures.

8.4.2. Stealth retainers, plugs and seats should be examined for damage when disassembled. Holes in the retainer should be checked for worn or eroded surfaces. Check for plugged holes in the retainer. Stealth retainers cannot be disassembled. Repair and replacement of damaged parts is critical to maintaining noise control.

⚠ **CAUTION**: With rare exception, to function properly, Stealth is always installed flow under.

8.4.3 When reinstalling Stealth retainers, care must be given to orientating the retainer correctly. Stealth retainers have an arrow that must be aligned with the valve outlet.

Figure 10
Mark One with TigerTooth Trim Body Assembly

8.5. TigerTooth

8.5.1. TigerTooth replaces the standard Mark One retainer with a welded or pinned, stacked-disk retainer, see Figure 10. Several of the parts, including the plug, seat ring and bonnet have dimensional differences from the standard Mark One design. Assembly and disassembly of the valve follows the standard procedures.

8.5.2. TigerTooth retainers, plugs and seats should be examined for damage when disassembled. The retainer should be checked for worn or eroded surfaces. Check for debris lodged in the retainer. Pinned TigerTooth retainers can be disassembled and cleaned. Care should be taken when reassembling to stack up the discs in the same order. Each disc has been etched with a number for that purpose. Welded TigerTooth retainers should not be disassembled outside a qualified service centre. Repair and replacement of damaged parts is critical to maintaining noise and/or cavitation control.

⚠ **CAUTION**: With rare exception, to function properly, TigerTooth is always installed flow under.

Table III: Troubleshooting Chart

Problem	Probable Cause	Corrective Action
Stem motion impeded	1. Over-tightened packing	1. Adjust the packing box nuts to slightly over finger-tight
	2. Service temperature is beyond operating limits of trim design	2. Reconfirm service conditions and contact factory
	3. Inadequate air supply	3. Check for leaks in air supply or instrument signal system; tighten loose connections and replace leaky lines
	4. Malfunctioning positioner	4. Refer to positioner User Instructions
Excessive seat leakage	1. Improperly tightened bonnet	1. Refer to step 7.11 Assembly and Installation section for correct tightening procedure
	2. Worn or damaged seat ring	2. Disassemble valve and replace or repair seat ring
	3. Worn or damaged seat or bonnet gasket	3. Disassemble and replace gaskets
	4. Inadequate actuator thrust	4. Check for adequate air supply to actuator; if air supply is adequate, reconfirm service conditions and contact factory
	5. Incorrectly adjusted plug	5. Refer to steps 7.9 to 7.11 Assembly and Installation section for correct plug adjustment
	6. Improper flow direction	6. Refer to original specifications or contact factory
	7 Improper handwheel adjustment acting as a limit-stop	7. Adjust handwheel until plug seats properly
	8. Worn or damaged pressure balanced seals	8. Disassemble and replace pressure balanced seals
	9. Inadequate air supply pressure	9. Check for leaks in air supply or instrument signal system; tighten loose connections and replace leaky lines
Inadequate flow	1. Improper plug adjustment, limiting stroke	1. Refer to steps 7.9 to 7.11 Assembly and Installation section for correct plug adjustment
	2. Malfunctioning positioner	2. Refer to positioner maintenance instructions
	3. Service conditions exceed trim design capacity	3. Verify service conditions and consult factory
	4. Incorrect actuator stroke	4. Verify actuator stroke
	5. Inadequate air supply pressure	5. Check for leaks in air supply or instrument signal system; tighten loose connections and replace leaky lines
Plug slams	1.Incorrect plug adjustment allowing improper cushion of air between actuator piston and yoke	1. Refer to steps 7.9 to 7.11 Assembly and Installation section for correct plug adjustment
	2. Inadequate air supply	2. Check air supply to actuator; repair leaks and remove any restrictions in supply line
	3.Trim sized too large for flow rate	3. Verify the service conditions and actuator sizing, install reduced trim
Valve does not fail in correct position	1. Incorrect flow direction	1. Reconfirm direction and, if necessary, correct flow direction through valve
	2. Incorrect actuator fail direction	2. Consult actuator User Manual and change fail direction

FLOWSERVE

User instructions - Mark One - VLENIM0001-01 07.07

FCD VLENIM0001-01 – 07.07 (Replaces VLAIM001-00)

To find your local Flowserve representative please use the Sales Support Locator System found at:

www.flowserve.com/contact.htm

or call USA 801 489-8611

Flowserve Corporation has established industry leadership in the design and manufacture of its products. When properly selected, this Flowserve product is designed to perform its intended function safely during its useful life. However, the purchaser or user of Flowserve products should be aware that Flowserve products might be used in numerous applications under a wide variety of industrial service conditions. Although Flowserve can (and often does) provide general guidelines, it cannot provide specific data and warnings for all possible applications. The purchaser/user must therefore assume the ultimate responsibility for the proper sizing and selection, installation, operation, and maintenance of Flowserve products. The purchaser/user should read and understand the Installation Operation Maintenance (IOM) instructions included with the product, and train its employees and contractors in the safe use of Flowserve products in connection with the specific application.

While the information and specifications contained in this literature are believed to be accurate, they are supplied for informative purposes only and should not be considered certified or as a guarantee of satisfactory results by reliance thereon. Nothing contained herein is to be construed as a warranty or guarantee, express or implied, regarding any matter with respect to this product. Because Flowserve is continually improving and upgrading its product design, the specifications, dimensions and information contained herein are subject to change without notice. Should any question arise concerning these provisions, the purchaser/user should contact Flowserve Corporation at any one of its worldwide operations or offices.

© 2007 Flowserve Corporation, Irving, Texas, USA. Flowserve is a registered trademark of Flowserve Corporation.

Flowserve Worldwide

Flowserve Flow Control Division
1350 N. Mt. Springs Parkway
Springville, UT 84663
USA
Phone: 801 489 8611
Fax: 801 489 3719

Flowserve Australia Pty Ltd.
14 Dalmore Drive
Scoresby Victoria 3179
Australia
Phone: 61 (3) 9759 3300
Fax: 61 (3) 9759 3301

Flowserve (Austria) GmbH
Control Valves-Villach Operation
Kasernengasse 6
9500 Villach
Österreich
Phone: 43 (0) 4242 41 181 0
Fax: 43 (0) 4242 41181 50

Flowserve India Controls Pvt Ltd.
Plot # 4, 1A, Road #8 EPIP Whitefield
Bangalore, Karnataka, 560066
India
Phone: 91 80 40146200
Fax: 91 80 28410286

Flowserve Fluid Motion and Control (Suzhou)Co., Ltd.
No.35, Baiyu Road,
Suzhou Industrial Park, Suzhou
Jiangsu Province, P.R. 215021
China
Phone: 86 512 6288 8790
Fax: 86 512 6288 8736

Flowserve Pte Ltd
12 Tuas Avenue 20
Singapore 638824
Singapore
Phone: 65 6879 8900
Fax: 65 6862 4940

Flowserve de Venezuela
Zona Industrial Av. 68
No. 149B-155 Zona Industrial II
Maracaibo, Zulia 1042
Venezuela
Phone: 582 61 736.1771
Fax: 582 61 736.1912

Flowserve Corporation
PO Box 209
Al Khobar 31952
Saudi Arabia
Phone: 9663 857 3146
Fax: 9665 4915276

Flowserve
Unit 1, 12 Director Road
Spartan Exit 2
Kempton Park
Gauteng 1613
South Africa
Phone: 27 (0) 11 923 7300
Fax: 27 (0) 11 974 6420

Flowserve Regional

Flowserve Canada Corp.
9044 - 18th Street
Edmonton, Alberta T6P 1K6
Canada
Phone: 780-449-4850
Fax: 780-449-4851

Flowserve Flow Control
Quick Response Center
104 Chelsea Parkway
Boothwyn, Pennsylvania
USA
Phone: 610 497 8600
Fax: 610 497 6680

Flowserve Flow Control
Quick Response Center
5114 Railroad Street
Deer Park, Texas 77536
USA
Phone: 281 479 9500
Fax: 281 479 8511

Flowserve Flow Control
Quick Response Center
2920 W. Cardinal Drive
Beaumont, Texas 77705
USA
Phone: 409 842 6600
Fax: 409 840 5213

flowserve.com

FLOWSERVE

USER INSTRUCTIONS

Installation Operation Maintenance Safety Manual

Digital Positioner 3200MD

LGENIM0059-09 12/13

VOGT POWER INTERNATIONAL
V17481-ICXE-509-00
12-Jan-2017

Experience in Motion

FLOWSERVE

Contents

1 Terms Concerning Safety 3
2 General Information 3
3.1 Unpacking 3
3.2 Storage 3
3.3 Pre-installation Inspection 3
4 Logix 3200*MD* Positioner Overview 4
4.1 Specifications 4
4.2 Positioner Operation 6
4.3 Detailed Sequence of Positioner Operations 7
5 Mounting and Installation 8
5.1 Mounting to Valtek Linear Mark One Valves 8
5.2 Mounting to Standard Valtek Rotary Valves 9
5.3 Optional Valtek Rotary Mounting Procedure 10
5.4 NAMUR Rotary Mounting 11
5.5 Tubing Positioner to Actuator 11
6 Wiring and Grounding Guidelines 12
6.1 4-20 mA Command Input Wiring 12
6.2 Grounding Screw 12
6.3 Compliance Voltage 12
6.4 Cable Requirements 13
6.5 Intrinsically Safe Barriers 14
7 Startup 14
7.1 Logix 3200*MD* Local Interface Operation 14
7.2 Initial DIP Switch Settings 14
7.3 Operation of Configuration DIP Switch Settings 14
7.4 Setup of the Cal Dip-Switch for the Quick Calibration operating mode. 16
7.5 QUICK-CAL Operation 16
7.6 Local Control of Valve Position 17
7.7 Factory Reset 17
7.8 Command Reset 17
7.9 Version number checking 17
7.10 Logix 3200*MD* Status Condition 17
7.11 *ValveSight* Configuration and Diagnostic Software and HART 375 Handheld Communicator 17
8 Maintenance and Repair 21
8.1 Driver Module Assembly 21
8.2 Regulator 23
8.3 Checking or Setting Internal Regulator Pressure 23
8.4 Spool Valve 24
8.5 Spool Valve Cover 24
8.6 Stem Position Sensor 25
8.7 Main PCB Assembly 26
8.8 Pressure Sensor Board 26
8.9 Customer Interface Board 27
9 Optional Hardware 28
9.1 Vented Design 28
9.2 HART Modem 28
9.3 4-20 mA Analog Output Board 29
10 Requirements for Safety Integrity 30
10.1 Fail Safe State 30
10.2 Safety Function 30
10.3 Fail Safe State Response Time 30
10.4 Diagnostic Annunciation and Response Time 30
10.5 Maximum Achievable SIL 31
10.6 Model Selection and Specification of Flowserve 3200MD Positioner 31
10.7 Installation 31
10.8 Firmware Update 31
10.9 Required Configuration Settings 31
10.10 Reliability Data 31
10.11 Lifetime Limits 32
10.12 Proof Testing 32
Steps for Proof Test 32
10.13 Maintenance 32
10.14 Repair and Replacement 32
10.15 Training Requirements 32
11 Parts List 34
12 Logix 3200MD Spare Parts Kits 35
13 Logix 3200MD Mounting Kits 35
13.1 Valtek Mounting Kits 35
13.2 Logix O.E.M. Mounting Kits 36
13.3 NAMUR Accessory Mounting Kit Part Numbers 36
15 How to Order 38
16 Troubleshooting 39

FLOWSERVE

1 Terms Concerning Safety

The safety terms DANGER, WARNING, CAUTION and **NOTE** are used in these instructions to highlight particular dangers and/or to provide additional information on aspects that may not be readily apparent.

DANGER: Indicates that death, severe personal injury and/or substantial property damage will occur if proper precautions are not taken.

WARNING: Indicates that death, severe personal injury and/or substantial property damage can occur if proper precautions are not taken.

CAUTION: Indicates that minor personal injury and/or property damage can occur if proper precautions are not taken.

NOTE: indicates and provides additional technical information, which may not be very obvious even to qualified personnel. Compliance with other, not particularly emphasized notes, with regard to transport, assembly, operation and maintenance and with regard to technical documentation (e.g., in the operating instruction, product documentation or on the product itself) is essential, in order to avoid faults, which in themselves might directly or indirectly cause severe personal injury or property damage.

2 General Information

The following instructions are designed to assist in unpacking, installing and performing maintenance as required on Valtek® Logix® 3200MD digital positioners. Series 3000 is the term used for all the positioners herein; however, specific numbers indicate features specific to model (i.e., Logix 3200 indicates that the positioner has HART® protocol). See Logix 3200MD Model Number table in this manual for a breakdown of specific model numbers. Product users and maintenance personnel should thoroughly review this bulletin prior to installing, operating, or performing any maintenance on the valve.

Separate Valtek Flow Control Products Installation, Operation, Maintenance instructions cover the valve (such as IOM 1 or IOM 27) and actuator (such as IOM 2 or IOM 31) portions of the system and other accessories. Refer to the appropriate instructions when this information is needed.

To avoid possible injury to personnel or damage to valve parts, WARNING and CAUTION notes must be strictly followed. Modifying this product, substituting non-factory parts or using maintenance procedures other than outlined could drastically affect performance and be hazardous to personnel and equipment, and may void existing warranties.

WARNING: Standard industry safety practices must be adhered to when working on this or any process control product. Specifically, personal protective and lifting devices must be used as warranted.

WARNING: Substitution of components may impair intrinsic safety.

3 Unpacking and Storage

3.1 Unpacking

1. While unpacking the Logix 3200MD positioner, check the packing list against the materials received. Lists describing the system and accessories are included in each shipping container.
2. When lifting the system from the shipping container, position lifting straps to avoid damage to mounted accessories. Systems with valves up to six inches may be lifted by actuator lifting ring. On larger systems, lift unit using lifting straps or hooks through the yoke legs and outer end of body.

   WARNING: When lifting a valve/actuator assembly with lifting straps, be aware the center of gravity may be above the lifting point. Therefore, support must be given to prevent the valve/actuator from rotating. Failure to do so can cause serious injury to personnel or damage to nearby equipment.
3. In the event of shipping damage, contact the shipper immediately.
4. Should any problems arise, contact a Flowserve Flow Control Division representative.

3.2 Storage

Control valve packages (a control valve and its instrumentation) can be safely stored in an enclosed building that affords environmental protection; heating is not required. Control valve packages must be stored on suitable skids, not directly on the floor. The storage location must also be free from flooding, dust, dirt, etc.

3.3 Pre-installation Inspection

If a valve control package has been stored for more than one year, inspect one actuator by disassembling it per the appropriate Installation, Operation, and Maintenance Instructions (IOM) prior to valve installation. If O-rings are out-of-round, deteriorated, or both, they must be replaced and the actuator rebuilt. All actuators must then be disassembled and inspected. If the actuator O-rings are replaced, complete the following steps:

1. Replace the pressure-balance plug O-rings.

2. Inspect the solenoid and positioner soft goods and replace as necessary.

4 Logix 3200MD Positioner Overview

The Logix 3200MD digital positioner is a two-wire 4-20 mA input digital valve positioner. The positioner is configurable through the local user interface. The Logix 3200MD utilizes the HART protocol to allow two-way remote communications with the positioner. The Logix 3200MD positioner can control both double- and single-acting actuators with linear or rotary mountings. The positioner is completely powered by the 4-20 mA input signal. Start up current must be at least 3.6 mA without AO card or 3.85 mA with AO card.

4.1 Specifications

Table I: Electrical Specifications

Power Supply	Two-wire, 4-20 mA 10.0 to 30.0 VDC
Compliance Voltage	10.0 VDC @ 20 mA
Effective Resistance	495 Ω @ 20 mA Typical Add 20 Ω when HART communication active
Communications	HART Protocol
Minimum Operating Current	3.6 mA without AO board 3.85 mA with AO board
Maximum Voltage	30.0 VDC

Table II: ValveSight Suite Software Specifications

Computer	Minimum Pentium processor running Windows 95, 98, NT, 2000, XP, 32 MB total memory (64 MB recommended), 30 MB available hard disk space, CD-ROM drive
Ports	1 minimum available with 8 maximum possible. (Can also communicate via PCMCIA and USB connections)
HART Modem	RS-232/PCMCIA card/USB
HART Filter	May be required in conjunction with some DCS hardware
HART MUX	MTL 4840/ELCON 2700

Table III: Environmental Conditions

Operating Temperature Range	Standard	-40° to 176°F (-40° to 80°C)
Transport and Storage Temperature Range	-40° to 176°F (-40° to 80°C)	
Operating Humidity	0 - 100% non-condensing	

/ **NOTE**: *The air supply must conform to ISA Standard ISA 7.0.01 (a dew point at least 18 degrees Fahrenheit below ambient temperature, particle size below five microns—one micron recommended—and oil content not to exceed one part per million).*

Table IV: Physical Specifications

Housing Material	Cast, powder-painted aluminum, stainless steel
Soft Goods	Buna-N / Florosilicone
Weight	8.3 pounds (3.9 kg) aluminum 20.5 pounds (9.3 kg) stainless steel

Table V: Positioner Specifications

Deadband	<0.1% full scale
Repeatability	<0.05% full scale
Linearity	<0.5% (rotary), <0.8%, (sliding stem) full scale
Air Consumption	<0.3 SCFM (0.5 Nm³/hr) @ 60 psi (4 barg)
Air Capacity	12 SCFM @ 60 psi (4 barg) (0.27 Cv)

Table VI: 4 to 20 mA Analog Output Specifications

Potential Range of Rotation	40° - 95°
Power Supply Range	12.5 to 40 VDC, (24 VDC typical)
Maximum Load Resistance (ohms)	(Supply voltage - 12.5) / 0.02
Current Signal Output	4-20 mA
Linearity	1.0% F.S.
Repeatability	0.25% F.S.
Hysteresis	≤ .2% F.S.
Operating Temperature	-40° to 176°F, -40° to 80°C

Table VII: Hazardous Area Certifications

	North America (FM/CSA)
Flame Proof SIRA 03ATEX1387 II 2 GD Ex d IIB+H2 T5 IP65 Ex tD A21 IP65 T95˚C (Ta =-40°C to +80°C) T5 (Ta = -40˚C to +80C	Explosion Proof Class I, Div 1, Groups B,C,D DIP Class II, III, Div 1 Groups E,F,G Class I, Zone 1, Ex d IIB+H2 (CSA Only) T5 Tamb = -40˚C ≤ Ta ≤ +80˚C (CSA Only) T6 Tamb = -40˚C ≤ Ta ≤ +60˚C Type 4X
Intrinsically Safe SIRA 03ATEX2299X II 1 GD Ex ia IIC Ex iaD 20 T95˚C T4 (Ta = -52˚C to +85˚C) (Ta = -52˚C to +80˚C) T5 (Ta = -52˚C to +55˚C) Entity Parameters Ui = 30V Ii = 100mA Pi = 800mW Ci = 30nF Co = 36nF Li = 0	Intrinsically Safe Class I,II, III, Div 1, Groups A,B,C,D,E,F,G Class I, Zone 0, AExia IIC (FM Only) T4 Tamb = -50˚C ≤ Ta ≤ +85˚C T5 Tamb = -50˚C ≤ Ta ≤ +55˚C Type 4X Entity Parameters Ui = 30V Ii = 100mA Pi = 800mW Ci = 30nF Li = 0
Non-Incendive SIRA 08ATEX4006 II 3 GD Ex nL nA IIC Ex tD A22 T95˚C (Ta = -52°C to +80°C) T4 (Ta = -52˚C to +85˚C) T5 (Ta = -52˚C to +55˚C)	Non-Incendive Class I, Div 2, Groups A,B,C,D T4 Tamb = -50˚C ≤ Ta ≤ +85˚C T5 Tamb = -50˚C ≤ Ta ≤ +55˚C Type 4X Barriers Not Required
IECEx	**InMetro**
Explosion Proof IECEx SIR 04.0023X Ex d IIB+H2 T5 Ta = -40˚C to +55˚C	Explosion Proof TÜV 11.0070 Ex d IIB+H2 T5 Gb IP65 Ta = -40˚C -Ta - +80˚C
Intrinsically Safe IECEx FMG 05.0003X Ex ia IIC Ex iaD 20 T95˚C T4 Ta = -40˚C to +85˚C Ta = -40C to +80˚C T5 Ta = -40˚C to +55˚C Entity Parameters UI = 30V Ii = 100mA Pi = 800mW CI = 30nF Li = 0	Instrinsically Safe TÜV 11.0071X Ex ia IIC Ga IP65 Ex ia IIIC T95˚C Da IP65 T4 Ta = -40˚C-Ta- +85˚C Ta = -40˚C-Ta- +85˚C T5 Ta = -40˚C-Ta- +55˚C Entity Parameters Ui = 30Vcc Ii = 100mA Pi= 800mW Ci = 30nF Li = 0
KOSHA	**Gost**
Explosion Proof 10-AV4BO-0560X Ex d IIB+H2 T5 T5 Ta = -20°C to +50°C	

Special Conditions for Safe Use:

- The equipment must be installed in such a manner as to minimize the risk of impact or friction with other metal surfaces.
- To avoid possibility of static discharge clean only with a damp Cloth
- In order to maintain the explosion proof certifications do not remove or loosen covers while circuits are live.
- For Intrinsically Safe installations the positioner must be connected to suitably rated intrinsically safe equipment, and must be installed in accordance with intrinsically safe installation standards.
- Substitution of components may impair Intrinsic Safety.

4.2 Positioner Operation

The Logix 3200MD positioner is an electric feedback instrument. Figure 1 shows a Logix 3200MD positioner installed on a double-acting linear actuator for air-to-open action.

The Logix 3200MD receives power from the two-wire, 4-20 mA input signal. However, since this positioner utilizes HART communications, two sources can be used for the command signal: Analog and Digital. In Analog source, the 4-20 mA signal is used for the command source. In Digital source, the level of the input 4-20 mA signal is ignored and a digital signal, sent via HART, is used as the command source. The command source can be accessed with ValveSight software, the HART 375 communicator, or other host software.

Whether in Analog or Digital Source, 0% is always defined as the valve closed position and 100% is always defined as the valve open position. In Analog Source, the 4-20 mA signal is converted to a percentage. During loop calibration, the signals corresponding to 0% and 100% are defined. The input signal in percent passes through a characterization/limits modifier block. The positioner no longer uses CAMs or other mechanical means to characterize the output of the positioner. This function is done in software, which allows for in-the-field customer adjustment. The positioner has three basic modes: *Linear, Equal Percent (=%)* and *Custom* characterization. In *Linear* mode, the input signal is passed straight through to the control algorithm in a 1:1 transfer. In *Equal Percent (=%)* mode, the input signal is mapped to a standard 30:1 rangeability =% curve. If *Custom* characterization is enabled, the input signal is mapped to either a default =% output curve or a custom, user-defined 21-point output curve. The custom user-defined 21-point output curve is defined using a handheld or ValveSight software. In addition, two user-defined features, *Soft Limits* and *MPC* (Minimum Position Cutoff), may affect the final input signal. The actual command being used to position the stem, after any characterization or user limits have been evaluated, is called the *Control Command*.

The Logix 3200MD uses a two-stage, stem-positioning algorithm. The two stages consist of an inner-loop, spool control and an outer-loop, stem position control. Referring again to Figure 1, a stem position sensor provides a measurement of the stem movement. The *Control Command* is compared against the *Stem Position*. If any deviation exists, the control algorithm sends a signal to the inner-loop control to move the spool up or down, depending upon the deviation. The inner-loop then quickly adjusts the spool position. The actuator pressures change and the stem begins to move. The stem movement reduces the deviation between *Control Command* and *Stem Position*. This process continues until the deviation goes to zero.

The inner-loop controls the position of the spool valve by means of a driver module. The driver module consists of a temperature-compensated hall effect sensor and a piezo valve pressure modulator.

Figure 1: Logix 3200MD Digital Positioner Schematic (air-to-open configuration)

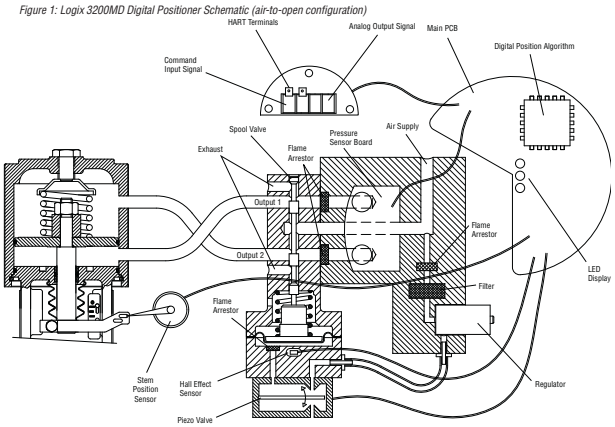

Figure 2: System Positioning Algorithm

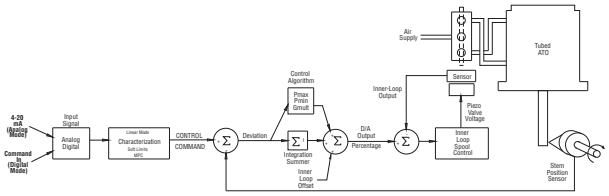

The piezo valve pressure modulator controls the air pressure under a diaphragm by means of a piezo beam bender. The piezo beam deflects in response to an applied voltage from the inner-loop electronics. As the voltage to the piezo valve increases, the piezo beam bends, closing off against a nozzle causing the pressure under the diaphragm to increase. As the pressure under the diaphragm increases or decreases, the spool valve moves up or down respectively. The hall effect sensor transmits the position of the spool back to the inner-loop electronics for control purposes.

4.3 Detailed Sequence of Positioner Operations

A more detailed example explains the control function. Assume the unit is configured as follows:

- Unit is in *Analog command source.*
- *Custom* characterization is disabled (therefore characterization is *Linear*).
- No soft limits enabled. No MPC set.
- Valve has zero deviation with a present input signal of 12 mA.
- Loop calibration: 4 mA = 0% command, 20 mA = 100% command.
- Actuator is tubed and positioner is configured air-to-open.

Given these conditions, 12 mA represents a *Command source* of 50 percent. *Custom characterization* is disabled so the *Command source* is passed 1:1 to the *Control Command*. Since zero deviation exists, the Stem Position is also at 50 percent. With the stem at the desired position, the spool valve will be at a middle position that balances the pressures above and below the piston in the actuator. This is commonly called the *null* or *balanced* spool position.

Assume the input signal changes from 12 mA to 16 mA. The positioner sees this as a *Command source* of 75 percent. With *Linear characterization*, the *Control Command* becomes 75 percent. Deviation is the difference between *Control Command* and *Stem Position*: Deviation = 75% - 50% = +25%, where 50 percent is the present stem position. With this positive deviation, the control algorithm sends a signal to move the spool up from its present position. As the spool moves up, the supply air is applied to the bottom of the actuator and air is exhausted from the top of the actuator. This new pressure differential causes the stem to start moving towards the desired position of 75 percent. As the stem moves, the *Deviation* begins to decrease. The control algorithm begins to reduce the spool opening. This process continues until the *Deviation* goes to zero. At this point, the spool will be back in its null or balanced position. Stem movement will stop and the desired stem position is now achieved.

One important parameter has not been discussed to this point: Inner loop offset. Referring to Figure 2, a number called *Inner loop offset* is added to the output of the control algorithm. In order for the spool to remain in its null or balanced position, the control algorithm must output a non-zero spool command. This is the purpose of the *Inner loop offset*. The value of this number is equivalent to the signal that must be sent to the spool position control to bring it to a null position with zero deviation. This parameter is important for proper control and is optimized and set automatically during stroke calibration.

Figure 3: Linear Mark One Control Valve Mounting

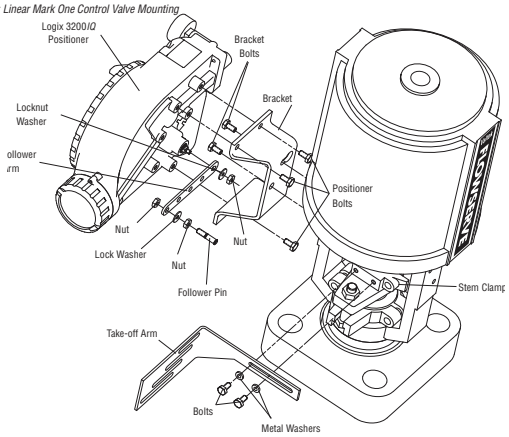

5 Mounting and Installation

5.1 Mounting to Valtek Linear Mark One Valves

To mount a Logix 3200MD positioner to a Valtek linear Mark One valve, refer to Figure 3 and proceed as outlined below. The following tools are required:

- 9⁄16" open-end wrench (or ½" for spud sizes 2.88 and smaller)
- 7⁄16" box wrench
- 3⁄8" open-end wrench

1. Remove washer and nut from follower pin assembly. Insert pin into the appropriate hole in follower arm, based on stroke length. The stroke lengths are stamped next to their corresponding holes in the follower arms. Make sure the unthreaded end of the pin is on the stamped side of the arm. Reinstall lock washer and tighten nut to complete follower arm assembly.
2. Slide the double-D slot in the follower arm assembly over the flats on the position feedback shaft in the back of the positioner. Make sure the arm is pointing toward the customer interface side of the positioner. Slide lock washer over the threads on the shaft and tighten down the nut.
3. Align the bracket with the three outer mounting holes on the positioner. Fasten with ¼" bolts.
4. Screw one mounting bolt into the hole on the yoke mounting pad nearest the cylinder. Stop when the bolt is approximately 3⁄16" from being flush with mounting pad.
5. Slip the large end of the teardrop shaped mounting hole in the back of the positioner/bracket assembly over the mounting bolt. Slide the small end of the teardrop under the mounting bolt and align the lower mounting hole.
6. Insert the lower mounting bolt and tighten the bolting.
7. Position the take-off arm mounting slot against the stem clamp mounting pad. Apply Loctite 222 to the take-off arm bolting and insert through washers into stem clamp. Leave bolts loose.
8. Slide the appropriate pin slot of the take-off arm, based on stroke length, over the follower arm pin. The appropriate stroke lengths are stamped by each pin slot.
9. Center the take-off arm on the rolling sleeve of the follower pin.
10. Align the take-off arm with the top plane of the stem clamp and tighten bolting. Torque to 120 in-lb.

! NOTE: If mounted properly, the follower arm should be horizontal when the valve is at 50% stroke and should move approximately ±30° from horizontal over the full stroke of the valve. If mounted incorrectly, a stroke calibration error will occur and the indicator lights will blink a RGGY code indicating the position sensor has gone out of range on one end of travel. Reposition the feedback linkage or rotate the position sensor to correct the error.

5.2 Mounting to Standard Valtek Rotary Valves

(See Figure 4)

The standard rotary mounting applies to Valtek valve/actuator assemblies that do not have mounted volume tanks or handwheels. The standard mounting uses a linkage directly coupled to the valve shaft. This linkage has been designed to allow for minimal misalignment between the positioner and the actuator. The tools required for the following procedure are:

- 5⁄32" Allen wrench
- ½" open-end wrench
- 7⁄16" open-end wrench
- 3⁄8" socket with extension
- 3⁄16" nutdriver

1. Fasten the spline lever adapter to the splined lever using two 6 x ½" self-tapping screws.
2. Slide the take-off arm assembly onto the spline lever adapter shaft. Insert the screw with star washer through the take-off arm and add the second star washer and nut. Tighten nut with socket so arm is lightly snug on the shaft but still able to rotate. This will be tightened after linkage is correctly oriented.
3. Attach follower arm to positioner feedback shaft using the star washer and 10-32 nut.

   ! NOTE: The arm will point up when feedback shaft is in the free position.
4. Using four ¼-20 x ½" bolts, fasten positioner to universal bracket using appropriate hole pattern (stamped on bracket).
5. Using a ½" end wrench and two 5⁄16-18 x ½" bolts, attach bracket to actuator transfer case pad. Leave these bolts slightly loose until final adjustments are made.
6. Rotate take-off arm so the follower pin will slide into the slot on the take-off arm. Adjust the bracket position as needed noting the engagement of the follower pin and the take-off arm slot.

Figure 4: Standard Rotary Mounting

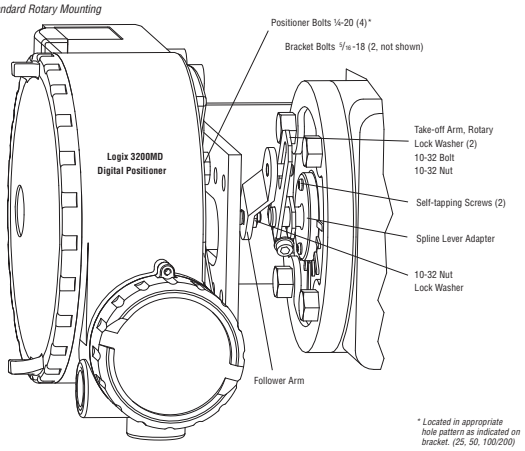

The pin should extend approximately 1⁄16" past the take-off arm. When properly adjusted, securely tighten the bracketing bolts.

Orienting the Take-off Arm for Final Lock Down

1. Tube the Logix 3200MD positioner to the actuator according to the instructions given in Section 5.5, "Tubing Positioner to Actuator."
2. **With supply pressure off**, rotate the follower arm in the same direction the shaft would rotate upon a loss of supply pressure. When the mechanical stop of the follower arm (positioner) is reached, rotate back approximately 15 degrees.
3. Hold the take-off arm in place; tighten the screw of the take-off arm.

   ! NOTE: The take-off arm should be snug enough to hold the follower arm in place but allow movement when pushed.
4. Connect regulated air supply to appropriate port in manifold.
5. Remove main cover and locate DIP switches and QUICK-CAL button.
6. Refer to sticker on main board cover and set DIP switches accordingly. (A more detailed explanation of the DIP switch settings is given in Section 7, "Startup.")
7. Press the QUICK-CAL button for three to four seconds or until the positioner begins to move. The positioner will now perform a stroke calibration.
8. If the calibration was successful the green LED will blink GGGG or GGGY and the valve will be in control mode. Continue with step 9. If calibration failed, as indicated by a RGGY blink code, the A/D feedback values were exceeded and the arm must be adjusted away from the positioners limits. Return to step 2 and rotate the arm back approximately 10 degrees.

   ! NOTE: Remember to remove the air supply before re-adjusting take-off arm.
9. Tighten the nut on the take-off arm. The socket head screw of the take-off arm must be tight, about 40 in-lb.

   ! NOTE: If the take-off arm slips, the positioner must be recalibrated.

WARNING: Failure to follow this procedure will result in positioner and/or linkage damage. Check air-action and stroke carefully before lockdown of take-off arm to spline lever adapter.

5.3 Optional Valtek Rotary Mounting Procedure

(See Figure 5)

The optional rotary mounting applies to Valtek valve/actuator assemblies that are equipped with mounted volume tanks or handwheels. The optional mounting uses a four-bar linkage coupled to the valve shaft. The following tools are required:

- 3⁄8" open-end wrench
- 7⁄16" open-end wrench
- ½" open-end wrench

Figure 5: Optional Rotary Mounting

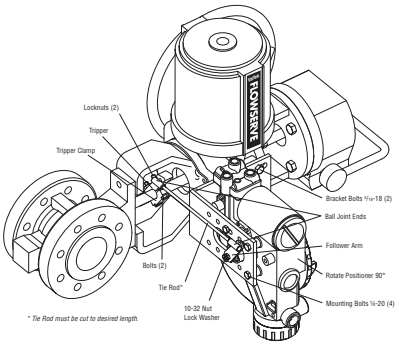

1. Using a ½" open-end wrench and two 5⁄16-18 x ½" bolts, attach bracket to actuator transfer case pads. Leave bracket loose to allow for adjustment.
2. Using four ¼-20 x ½" bolts and a 7⁄16" open-end wrench, fasten positioner to universal bracket, using the four-hole pattern that locates the positioner the farthest from the valve. Rotate positioner 90 degrees from normal so gauges are facing upward.
3. Attach follower arm to positioner feedback shaft, using the star washer and 10-32 nut.
4. Attach tripper and tripper clamp to valve shaft using two ¼-20 bolts and two ¼-20 locknuts. Leave tripper loose on shaft until final adjustment.
5. Thread ball joint linkage end to tripper and tighten (thread locking compound such as Loctite is recommended to prevent back threading). Adjust the length of tie rod so follower arm and tripper rotate parallel to each other (the rod must be cut to the desired length). Connect the other ball joint end to follower arm using a star washer and a 10-32 nut.
6. Tighten bracket and tripper bolting.
7. Check for proper operation, note direction of rotation.

WARNING: If rotating in wrong direction, serious damage will occur to the positioner and/or linkage. Check air action and stroke direction carefully before initiating operation.

5.4 NAMUR Rotary Mounting

The Logix 3200MD includes an option for NAMUR Rotary mounting. The NAMUR shaft option provides mounting to standard brackets for valve automation. The NAMUR option is not recommended for high performance valves since the normal alignment tolerances can cause a degradation in valve performance. Care must be taken when mounting the positioner using a NAMUR configuration to prevent damage to the shaft. Mount the positioner and rotate into position using the following table:

Logix 3200 Positioner NAMUR Mounting	
Actuator Rotation from **FAIL POSITION** (as viewed from positoner mounting end)	NAMUR Positioner shaft preloading instructions
Counter Clockwise	Insert positioner shaft into feedback slot with valve in the **FAIL POSITION** and rotate 105° and bolt into place.
Clockwise	Insert positioner shaft into feedback slot with valve in **FAIL Position** and rotate positioner CCW 15° and bolt in place

5.5 Tubing Positioner to Actuator

The Logix 3200MD digital positioner is insensitive to supply pressure changes and can handle supply pressures from 30 to 150 psig. A supply regulator is recommended if the customer will be using the diagnostic features of the Logix 3200MD but is not required. In applications where the supply pressure is higher than the maximum actuator pressure rating a supply regulator is required to lower the pressure to the actuator's maximum rating (not to be confused with operating range). An air filter is highly recommended for all applications where dirty air is a possibility.

! NOTE: The air supply must conform to ISA Standard ISA 7.0.01 (a dew point at least 18°F below ambient temperature, particle size below five microns—one micron recommended—and oil content not to exceed one part per million).

Air-to-open and air-to-close are determined by the actuator tubing, not the software. When air action selection is made during configuration, that selection tells the control which way the actuator has been tubed. The top output port is called *Output 1*. It should be tubed to the side of the actuator that must receive air to begin the correct action on increasing signal. Verify that tubing is correct prior to a stroke calibration. Proper tubing orientation is critical for the positioner to function correctly and have the proper failure mode. Refer to Figure 5 and follow the instructions below:

Linear Double-acting Actuators

For a linear air-to-open actuator, the Output 1 port of the positioner manifold is tubed to the bottom side of the actuator. The Output 2 port of the positioner manifold is tubed to the top side of the actuator. For a linear air-to-close actuator the above configuration is reversed.

Rotary Double-acting Actuators

For a rotary actuator, the Output 1 port of the positioner manifold is tubed to the bottom side of the actuator. The Output 2 port of the positioner manifold is tubed to the top side of the actuator. This tubing convention is followed regardless of air action. On rotary actuators, the transfer case orientation determines the air action.

Single-acting Actuators

For single-acting actuators, the Output 1 port is always tubed to the pneumatic side of the actuator regardless of air action. The Output 2 port must be plugged.

6 Wiring and Grounding Guidelines

(See Figure 6)

WARNING: This product has electrical conduit connections in either thread sizes ½' NPT or M20 which appear identical but are not interchangeable. Housings with M20 threads are stamped with the letters M20 above the conduit opening. Forcing dissimilar threads together will damage equipment, cause personal injury and void hazardous location certifications. Conduit fittings must match equipment housing threads before installation. If threads do not match, obtain suitable adapters or contact a Flowserve representative.

6.1 4-20 mA Command Input Wiring

Verify polarity when making field termination connection. The Logix 3200 is reverse polarity protected. Wire 4-20 mA current source to the input terminal labeled 4-20 mA Input on the user interface board (See Figure 6). Never connect a voltage source directly across the Logix 3200MD terminals. The current must always be limited for 4-20 mA operation. Minimum operating current is 3.6 mA.

The input loop current signal to the Logix 3200MD digital positioner should be in shielded cable. Shields must be tied to a ground at only one end of the cable to provide a place for environmental electrical noise to be removed from the cable. In general, shield wire should be connected at the source.

! NOTE: The Logix 3200MD positioner carries an intrinsically safe barrier rating of 100 mA. Input currents should not exceed 100 mA.

6.2 Grounding Screw

The green grounding screw, located inside the termination cap, should be used to provide the unit with an adequate and reliable earth ground reference. This ground should be tied to the same ground as the electrical conduit. Additionally, the electrical conduit should be earth grounded at both ends of its run.

WARNING: The green grounding screw must not be used to terminate signal shield wires.

6.3 Compliance Voltage

(See Figure 7)

Output compliance voltage refers to the voltage limit that can be provided by the current source. A current loop system consists of the current source, wiring resistance, barrier resistance (if present), and the Logix 3200MD positioner impedance. The Logix 3200MD digital positioner requires that the current loop system allows for a 10.0 VDC drop across the positioner at maximum loop current. The 10.0 VDC drop across the Logix 3200MD positioner terminals is generated by the positioner from the 4-20 mA loop current input. The actual voltage at the terminals varies from 9.8 to 10.0 VDC depending on the current mA signal, HART communications, and ambient temperature.

Figure 6: Field Termination

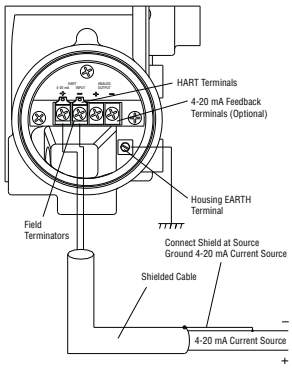

WARNING: Never connect a voltage source directly across the positioner terminals. This could cause permanent circuit board damage.

Determine if the loop will support the Logix 3200MD digital positioner by performing the following calculation.

$$\text{Voltage} = \text{Compliance Voltage } (@\text{Current}_{max}) - \text{Current}_{max} \bullet (R_{barrier} + R_{wire}) \quad \text{Equation 1}$$

The calculated voltage must be greater than 10 VDC in order to safely support the Logix 3200MD digital positioner.

Example:

DCS Compliance Voltage = 19 VDC

$R_{barrier}$ = 300 Ω

R_{wire} = 25 Ω

Current_{max} = 20 mA

Voltage = 19 VDC – 0.020 A • (300 Ω + 25 Ω) = 12.5 VDC

The voltage 12.5 VDC is greater than the required 10.0 VDC; therefore, this system will support the Logix 3200MD digital positioner. The Logix 3200MD positioner has a worst case input resistance equivalent to 500 Ω at a 20 mA input current.

6.4 Cable Requirements

The Logix 3200MD digital positioner utilizes the HART Communication protocol. This communication signal is superimposed on the 4-20 mA current signal. The two frequencies used by the HART protocol are 1200 Hz and 2200 Hz. In order to prevent distortion of the HART communication signal, cable capacitance and cable length restrictions must be calculated. The cable length must be limited if the capacitance is too high. Selecting a cable with lower capacitance/foot rating will allow longer cable runs. In addition to the cable capacitance, the network resistance also affects the allowable cable length.

Figure 7: Compliance Voltage

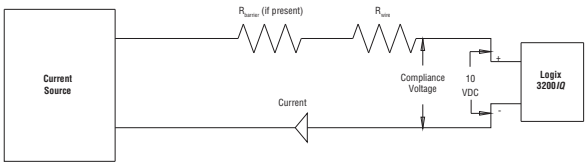

In order to calculate the maximum network capacitance, use the following formula:

$$C_{network}\ (\mu F) \le \left[\frac{65}{(R_{barrier} + R_{wire} + 390)}\right] - 0.0032 \quad \text{Equation 2}$$

Example: $R_{barrier}$ = 300 Ω

R_{wire} = 50 Ω

$C_{cable} = \frac{22\ pF}{foot} = \frac{0.000022\ \mu F}{foot}$

$$\left[\frac{65}{(300 + 50 + 390)}\right] - 0.0032 = 0.08\ \mu F = C_{max\ network}\ (\mu f)$$

$$\text{Maximum Cable Length} = \frac{C_{max\ network}\ (\mu F)}{C_{cable}}$$

$$\text{Maximum Cable Length} = \frac{0.08\ \mu F}{0.000022\ \mu F/foot} = 3636\ ft.$$

To control cable resistance, 24 AWG cable should be used for runs less than 5000 feet. For cable runs longer than 5000 feet, 20 AWG cable should be used.

6.5 Intrinsically Safe Barriers

When selecting an intrinsically safe barrier, make sure the barrier is HART compatible. Although the barrier will pass the loop current and allow normal positioner control, if not compatible, it may prevent HART communication.

7 Startup

7.1 Logix 3200MD Local Interface Operation

The Logix 3200MD local user interface allows the user to configure the basic operation of the positioner, tune the response, and calibrate the positioner without additional tools or configurators. The Local interface consists of a quick calibration button for automatic zero and span setting, along with two jog buttons for spanning valve/actuators with no fixed internal stop in the open position. There is also a switch block containing 8 switches. Six of the switches are for basic configuration settings and one is for calibration options. There is also a gain selector switch for adjusting the positioner gain settings. For indication of the operational status or alarm conditions there are also 3 LEDs on the local user interface.

Figure 8: Local User Interface

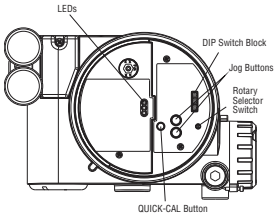

7.2 Initial DIP Switch Settings

Before placing the unit in service, set the dip-switches in the Configuration and Cal boxes to the desired control options. For a detailed description of each dip-switch setting, See Sections 1&2.

! NOTE: The switch settings in the Configuration box are activated only by pressing the "Quick Cal" button, except Auto-tune adjustments that can be made at any time.

7.3 Operation of Configuration DIP Switch Settings

The first 7 Dip Switches are for basic configuration

Air Action

This must be set to match the configuration of the valve/actuator mechanical tubing connection and spring location since these determine the air action of the system.

ATO (air-to-open) Select ATO if increasing output pressure from the positioner port 1 is tubed so it will cause the valve to open.

ATC (air-to-close) Select ATC if increasing output pressure from the positioner port 1 is tubed so it will cause the valve to close.

Signal at Closed

Normally this will be set to 4 mA for an Air-to-open actuator, and 20 mA for an Air-to-close actuator configuration.

4 mA Selecting 4 mA will make the valve fully closed when the signal is 4 mA and fully open when the signal is 20 mA.

20 mA Selecting 20 mA will make the valve fully closed when the signal is 20 mA and fully open when the signal is 4 mA.

Figure 9: Default Custom Characterization

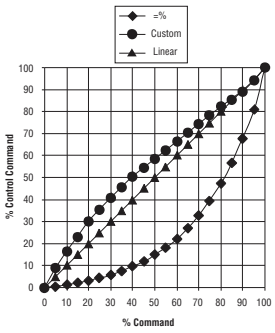

Pos. Characterization

LinearSelect if the actuator position should be directly proportional to the input signal. (Due to their inherent =% characteristics, this setting give an =% Cv characteristic for most rotary valves.)

Optional Select if another characteristic is desired, which is set in conjunction with the next switch, labeled Optional Pos. Char.

Optional Pos. Characterization

If the Pos. Characterization switch is set to optional then this switch is active with the following options:

The =% option will characterize the actuator response to the input signal based on a standard 30:1 equal percent rangability curve

Custom If *Custom* is selected, the positioner will be characterized to a custom table that must be setup using a properly configured HART 275 handheld or other host software. The Default setting for this curve is modified quick open. (also used for a linear Cv characteristic for most rotary valves)

Table VIII: Characteristic Curve Data

% Command	% Control Command		
	=%	Linear	Custom
0	0	0	0
5	0.62	5	8.66
10	1.35	10	16.24
15	2.22	15	23.17
20	3.25	20	30.11
25	4.47	25	35.31
30	5.91	30	40.51
35	7.63	35	45.42
40	9.66	40	50.34
45	12.07	45	54.40
50	14.92	50	58.47
55	18.31	55	62.39
60	22.32	60	66.31
65	27.08	65	70.27
70	32.71	70	74.23
75	39.40	75	78.17
80	47.32	80	82.11
85	56.71	85	85.50
90	67.84	90	88.89
95	81.03	95	94.45
100	100.00	100	100.00

Auto Tune

This switch controls whether the positioner will auto tune itself or use preset tuning parameters.

On *On* enables an auto tune feature that will automatically determine the positioner gain settings based on the current position of the selectable "Gain" switch setting and response parameters measured during the last QUICK-CAL. The gain switch is live meaning the settings can be adjusted at any time by changing the selectable gain switch position. (**! NOTE** that there is a small black arrow indicating the selection. The slot is NOT in the indicator.)

Figure 10: Adjustable GAIN Switch

If the selectable GAIN switch is set to "D", "C", or "B", with the auto tune switch on, progressively lower gain settings will be used based on response parameters measured during the last QUICK-CAL.

If the adjustable GAIN selector switch is set to "F", "G", or "H" with the auto tune switch on, progressively higher gain settings will be calculated and used based on response parameters measured during the last QUICK-CAL.

If the selectable GAIN switch is set to "A" the tuning will not be modified with a QUICK-CAL. Use this setting if custom tuning will be done using a handheld or other Flowserve software.

Off *Off* forces the positioner to use one of the factory preset tuning sets determined by the rotary "Gain" selector switch. Settings "A" through "H" are progressively higher gain predefined tuning sets. The Gain selector switch can be adjusted at any time to modify the tuning parameters.

! NOTE: With Autotune on "E" is the default adjustable GAIN selector switch setting for all actuator sizes. Raising or lowering the gain setting is a function of the positioner/valve response to the control signal, and is not actuator size dependent.

Spare Switch
If special features have been purchased they may be controlled by this switch. See special documentation for more details.

Stability Switch
This switch adjusts the position control algorithm of the positioner for use with low-friction control valves or high-friction automated valves.

Placing the switch to the left optimizes the response for low friction, high performance control valves. This setting provides for optimum response times when used with most low friction control valves.

Placing the switch to the right optimizes the response for valves and actuators with high friction levels. This setting slightly slows the response and will normally stop limit cycling that can occur on high friction valves.

! NOTE: This option is more effective on advanced units with the optional pressure sensors installed.

7.4 Setup of the Cal Dip-Switch for the Quick Calibration Operating Mode.

The eighth DIP switch selects between two calibration options. The function of the Cal DIP switch is described below.

Auto Select *Auto* if the valve/actuator assembly has an internal stop in the open position. In Auto mode the positioner will fully close the valve and register the 0% position and then open the valve to the stop to register the 100% position when performing a self-calibration. See detailed instructions in the next section on how to perform an auto positioner calibration.

Jog Select *Jog* if the valve/actuator assembly has no calibration stop in the open position. In the Jog mode the positioner will fully close the valve for the 0% position and then wait for the user to set the open position using the Jog buttons labeled with the up and down arrows. See the detailed instructions in the next section on how to perform a manual calibration using the "Jog" buttons.

WARNING: During the QUICK-CAL operation the valve may stroke unexpectedly. Notify proper personnel that the valve will stroke, and make sure the valve is properly isolated.

7.5 QUICK-CAL Operation

The QUICK-CAL button is used to locally initiate a calibration of the positioner. Pressing and holding the QUICK-CAL button for approximately 3 seconds will initiate the calibration. A QUICK-CAL can be aborted at any time by briefly pressing the QUICK-CAL button and the previous settings will be retained.

If the Quick calibration switch (be careful not to confuse with the QUICK-CAL button) is set to Auto and the valve/actuator assembly has the necessary internal stops the calibration will complete automatically. While the calibration is in progress you will notice a series of different lights flashing indicating the calibration progress. When the lights return to a sequence that starts with a green light the calibration is complete. (See the table X for an explanation of the various light sequences) The initial calibration of extremely large or very small actuators may require several calibration attempts. The positioner adapts to the actuator performance and begins each calibration where the last attempt ended. On an initial installation it is recommended that after the first successful calibration that one more calibration be completed for optimum performance.

If the Quick calibration switch is set to Jog, the calibration will initially close the valve then cause a small jump in the valve position. The jog calibration process will only allow the user to manually set the span; zero position is automatically always set at the seat. If an elevated zero is needed a handheld or other PC based configuration software is required.

When performing a jog calibration the LED's will flash in a sequence of Y-G-Y-R (yellow-green-yellow-red) which indicates that the user must use the jog keys to manually position the valve to approximately 100%. When the valve is approximately 100% open press both the▲ and ▼ buttons simultaneously to proceed to the next step. The valve will then stroke and then wait while flashing the Y-G-Y-R sequence again, allowing the user to adjust the valve position a second time to exactly 100% using the jog buttons. When the stem is properly positioned press both the▲ and ▼ buttons simultaneously again to register the 100% position and proceed. No more user actions are required while the calibration process is completed. When the lights return to a sequence that starts with a green light the calibration is complete. (See the appendix for an explanation of the various light sequences)

! NOTE: The Quick-Cal function on performs a stroke calibration and auto-tunes the positioner. It does not perform a pressure calibration or friction calibration which are necessary to utilize the full Pro diagnostics features.

7.6 Local Control of Valve Position

Local control of valve position can be done from the user interface by holding both jog buttons while then simultaneously pressing the quick cal button for 3 seconds. The ▲and ▼ buttons can then be used to position the valve. While in this mode the LED's will flash a YGYY (yellow-green-yellow-yellow) sequence. To exit the local control mode and return to normal operation, briefly press the QUICK-CAL button.

WARNING: When operating using local control of the valve, the valve will not respond to external commands. Notify proper personnel that the valve will not respond to remote command changes, and make sure the valve is properly isolated

7.7 Factory Reset

To perform a factory reset, hold QUICK-CAL button while applying power and all of the internal variables including calibration will be reset to factory defaults. The positioner must be re-calibrated after a factory reset. Tag names and other user configured limits, alarm settings, and valve information will also be lost and need to be restored.

WARNING: Performing a factory reset may result in the inability to operate the valve until reconfigured properly. Notify proper personnel that the valve may stroke, and make sure the valve is properly isolated.

7.8 Command Reset

Performing a command reset will reset the command source to analog if it has been inadvertently left in digital mode. This is done while a QUICK-CAL is in process by holding down both the ▲ and ▲ buttons while briefly pressing the QUICK-CAL button. A new QUICK-CAL must be done after resetting.

7.9 Version number checking

The version number of the embedded code may be checked at any time except during a calibration by holding down the ▲ button. This will not alter the operation of the unit other than to change the blink sequence to 3 blinks indicating the major version number. Holding the▼ button will give the minor version number without affecting operation. The version codes are interpreted by adding up the numbers assigned according to the following table:

Table IX: Version number checking

Color	First Blink Value	Second Blink Value	Third Blink Value
Green	0	0	0
Yellow	9	3	1
Red	18	6	2

For example if holding the ▲ button gave a G-G-R code, and holding the ▼ button gave a Y-Y-G code then the resulting version number would be (0+0+2).(9+3+0) or version 2.12.

7.10 Logix 3200MD Status Condition

The blink codes used to convey the status of the Logix 3200*MD* digital positioner are described in the following table. In general, any sequence starting with a green light flashing first is a normal operating mode and indicates that there are no internal problems.

Some diagnostic status results are only available with the Advanced or Pro diagnostics option.

7.11 *ValveSight* Configuration and Diagnostic Software and HART 375 Handheld Communicator

Flowserve Corporation has written custom configuration and diagnostic software for the Logix 3200MD digital positioner called *ValveSight*. This software is available from a Flowserve representative.

The Logix 3200MD digital positioner supports and is supported by the HART 375 Handheld Communicator. The Device Description (DD) files and the manual listed below can be obtained from the HART Communication Foundation or from your Flowserve representative. For more information please see the following guide:

- Product Manual for the HART Communicator.

Diagnostic features such as the datalog, signature tests, and ramp tests are performed using the ValveSight software. Certain calibration features such as loop calibration, analog output calibration, and actuator pressure sensor calibrations are performed using the HART 375 Handheld Communicator or using diagnostic software such as ValveSight.

! NOTE: Warnings and alarms marked by * * have been masked from the factory. To Initiate diagnostics, perform a stroke, actuator and friction calibration, set appropriate limits, then unmask the alarms and warnings using the DTM or DD. Not all codes are available on all models.

Table X: Logix 3200MD Status Condition Codes

Blink Code	Description	Recommendations
GGGG	**NORMAL OPERATION** indicates normal, healthy operation	
GGGY	**MPC ACTIVE MODE** (user set) indicates that tight shutoff (MPC) is active. The command is beyond the user set limit for tight shutoff feature. This is a normal condition for all valves when closed. The factory default setting triggers this at command signals below 1%. This indication may also occur on 3 way valves at both ends of travel if the high MPC value has been set.	If tight shutoff is not desired reset the tight shutoff limits to the correct values or adjust the command signal inside of the specified MPC value. See DTM screen: Configuration/Custom/Position Cutoff.
GGYG	**LOCAL INTERFACE DISABLED/ENABLED** when DISABLED, indicates PC software has been used to disable the local interface. This code is only present for a short time when the Quick Cal button is pressed.	If local control is desired then the local interface must be re-enabled from the remote software. See DTM screen: Configuration/Basic Local Interface.
GGYY	**DIGITAL COMMAND SOURCE** indicates a HART signal is needed to change the position command and the analog 4-20 mA input signal is ignored.	A manual Command Source Reset is provided to change the command back to analog control mode from the local interface if a PC or hand-held configurator is not available. This is done while a QUICK-CAL is in progress by holding down both the Jog buttons (up and down) while briefly pressing the QUICK-CAL button. A new QUICK-CAL must be done after resetting. See DTM screen: Dashboard.
GGRR	**SQUAWK MODE ON/OFF** (user set) When ON, this indicates a user has set the positioner to flash a special sequence so that it can be visually located.	This mode is canceled if the QUICK-CAL button is briefly pressed, the Squawk mode is selected again remotely, or more than one hour has passed since the command was issued. See DTM screen: Configuration/Custom/LED.
GYGG	**POSITION LIMIT ALERT** (user set) indicates the position has reached or is exceeding a user defined upper or lower position Indicator similar to a limit switch indicator.	Reset the indicator if more travel is needed or adjust the command signal back in the specified range. See DTM screen: Configuration/Custom/Position Cutoff. This indicator can be disabled.
GYGY	**SOFT STOP LIMIT ALERT** (user set) indicates the unit is being commanded to exceed a user defined upper or lower position limit and the internal software is holding the position at the limit. The function is similar to a mechanical limit stop except it is not active if the unit is un-powered.	Reset the limit if more travel is needed or adjust the command signal back in the specified range. See DTM screen: Configuration/Custom/Soft Limits.
GRGG	**CYCLES or TRAVEL LIMIT ALERT** (user set) indicates that one of the cycle or travel limits has been exceeded. The criterion and count limit are set by the user to track the usage of the valve. There are accumulators for total valve travel, total valve cycles, total spool valve travel, and total spool valve cycles. Flowserve supplied software can identify the specific limit that has been reached.	For valve accumulators indications follow routine procedures for maintenance when the limit is reached such as checking the packing tightness, and checking linkages for wear, misalignment, and tightness. After maintenance, reset the cycle accumulator. See DTM screen: Health Status/Positioner Health. This indicator can be disabled. For spool valve accumulators inspect for high air consumption and signs of wear. See DTM screen: Health Status/Positioner Health. This indicator can be disabled.
YGGY	**SIGNATURE IN PROGRESS MODE** indicates that a test has been initiated by Flowserve supplied software	Signatures can only be canceled by Flowserve supplied software. See DTM screen: Diagnostics.
YGGR	**INITIALIZING MODE** displays a blink sequence 3 times when the unit is powering up.	Wait for power up to complete.
YGYG	**CALIBRATION IS IN PROGRESS** indicates a calibration is process. Calibrations such as stroke may be initiated locally with the QUICK-CAL button or remotely. Other calibrations for the inputs and outputs or pressure sensors are only initiated remotely.	Local calibration may be canceled by briefly pushing the QUICK-CAL button. Remote calibrations can only be canceled by the software.
YGYY	**JOG COMMAND STATE** indicates the unit has been placed in a local override mode where the valve can only be stroked using the two local jog buttons.	Control the valve using the jog buttons. This mode may be canceled by briefly pushing the QUICK-CAL button.
YGYR	**JOG CALIBRATION STATE** indicates that during a jog calibration, the unit is waiting for the user to manually adjust the valve position to the desired 100% open position.	Use the buttons on the positioner to adjust the valve to the desired fully open position. See the explanation of Jog Calibrate in the QUICK-CAL section of main document for operation.
YYGG	**POSITIONER TEMPERATURE WARNING** (user set) indicates the internal electronics have exceeded a temperature limit. The minimum limit of the electronics and the default setting is -40°F (-40°C). Low temperature may inhibit responsiveness and accuracy. The maximum limit of the electronics and default setting is 185°F (85°C). High temperature may limit the life of the positioner.	Regulate the temperature of the positioner. If the temperature reading is in error, replace the main board. See DTM screen: Health Status/Positioner Health. This indicator can be disabled.
YYGY	**PRESSURE OUT OF RANGE WARNING** indicates that during a pressure sensor calibration, the range of applied pressures to port 1 was too small for optimum performance.	Adjust the supply pressure to a proper value (30-150 psig) so the positioner can properly calibrate the sensors. Then recalibrate. Briefly push the QUICK-CAL button to acknowledge this condition and the positioner will operate using the current short stroke calibration values if valid.

Blink Code	Description	Recommendations
**YYGR	**SUPPLY PRESSURE HIGH WARNING** indicates the positioner has determined that the supply pressure is above the user set warning limit.	Regulate the supply pressure at the positioner below the maximum limit recommended for your actuator. Recalibrate pressure sensors. Check the pressure sensor board connections. Replace pressure sensor board if necessary. See DTM screen: Health Status/Actuator Health. This indicator can be disabled.
**YYYG	**SUPPLY PRESSURE LOW WARNING** (user set) indicates that the supply pressure is below the user set warning limit. Low supply pressure can cause poor valve response or positioner failure. The minimum recommended supply pressure is 30 PSI (2.1 bar) for proper operation. The unit will fail at less than approximately 17 PSI (1.2 bars). Low supply pressure indications can also be caused by pneumatic leak.	Regulate the supply pressure at the positioner above 30 PSI (2.1 bar). Recalibrate pressure sensors. Ensure system air/gas supply is adequate. Repair kinked supply tubing. Check the pressure sensor board connections and replace pressure sensor board if necessary. Check for pneumatic leaks in the actuator and actuator tubing. See DTM screen: Health Status/Actuator Health. This indicator can be disabled.
**YYYY	**ACTUATION RATIO WARNING** (user set) indicates a decreased ability of the system to actuate the valve. It is based on the ratio of available force to required force to actuate. It is affected by the process load, friction, spring force, and available supply pressure.	Increase the supply pressure. Reduce the friction. Check the actuator spring. Resize the actuator. Adjust user set limits. See DTM screen: Health Status/Actuator Health. This indicator can be disabled.
**YRGG	**PILOT RELAY RESPONSE WARNING** (user set) indicates that the pilot relay is sticking or slow to respond. This affects the responsiveness, increases the chance of limit cycling and excessive air consumption. The pilot relay is part of the inner loop and consists of the driver module assembly with piezo (I-P relay) which is coupled to the spool valve. The value of this indicator corresponds with inner loop lag. Delayed response can be caused by a partially clogged piezo or debris, oil, corrosion, or ice on the spool, or low supply pressure.	Check response of the valve. If OK, adjust Pilot Relay Response limits. Check supply pressure. Check the spool for debris, oil, corrosion, ice on the spool. Clean or replace the spool assembly. Replace the piezo or driver module assembly. Maintain a clean, water-free air/gas supply. See DTM screen: Health Status/Positioner Health. This indicator can be disabled.
**YRGY	**FRICTION LOW WARNING** (user set) indicates the friction has passed below the user set limit.	Low friction is usually an indication of improperly loaded packing or seals in the valve and actuator. See DTM screen: Health Status/Valve Health. This indicator can be disabled.
**YRGR	**PNEUMATIC LEAK WARNING** (user set) indicates that the positioner has detected a leak in the actuation assembly. Leakage from the actuator can cause decreased responsiveness and excessive air/gas consumption. Low supply pressure can also trigger this warning.	Repair pneumatic leaks at the tubing junctions and actuator seals. Ensure proper supply pressure. See DTM screen: Health Status/Actuator Health. This indicator can be disabled.
YRYG	**FRICTION HIGH WARNING** (user set) indicates the valve/actuator friction has passed the user set limit. High friction can cause loop oscillations, poor position control, jerky motion, or valve sticking. It can be caused by build-up from the process on the stem, trim or seat , by a failing bearing or guides in the valve and actuator, galling of the trim or stem, excessively tightened packing, linkages, or other valve/actuator mechanical issues.	Determine if the friction is significantly interfering with the valve control. If not, consider increasing the friction warning limit. Consider the following to reduce friction: Stroke the valve to clear off build-up. Clear any external mechanical obstruction, loosen the packing, clean the stem, repair or replace the actuator. Highly localized friction or very jerky travel can indicate internal galling. Repair or replace internal valve components. See DTM screen: Health Status/Valve Health. This indicator can be disabled.
YRRY	**ELECTRONIC INABILITY TO FAIL SAFE WARNING** indicates that the piezo may be damaged. This may prevent the proper failure position upon loss of signal/power. This condition may occur briefly on an air-to-close valve that is held for long periods of time in the closed position, or and air-to-open valve held in the open position.	If alarm persists for more than 30 minutes, the Piezo assembly is damaged and should be replaced. This indicator can be disabled.
**YRRR	**PNEUMATIC INABILITY TO FAIL SAFE WARNING** indicates that upon loss of air supply, the valve may not move to the fail-safe position. The spring alone is not adequate to overcome the friction and process load in the system. The system is relying on pneumatic force to actuate in the direction the spring is pushing. The failsafe spring may have failed, or it was not sized properly for the application. Friction or process load may have increased.	Check for high friction. Repair or replace actuator spring. Reduce process load. This indicator can be disabled.
RGGY	**FEEDBACK READING PROBLEM DURING CALIBRATION ALARM** indicates that during calibration, the range of motion of the position feedback arm was too small for optimum performance, or the position sensor was out of range.	Check for loose linkages and/or adjust the feedback pin to a position closer to the follower arm pivot to create a larger angle of rotation if the feedback rotation is less than 15 degrees for the total valve travel and recalibrate. Briefly pushing the QUICK-CAL button acknowledges this condition and the positioner will operate using the current short stroke calibration if otherwise a good calibration. If the condition does not clear then adjust the positioner mounting, linkage or feedback potentiometer to move the position sensor back into range then restart the calibration. This error may be cleared by briefly pushing the QUICK-CAL button, which will force the positioner to use the parameters from the last good calibration.

Blink Code	Description	Recommendations
RGGR	**INNER LOOP OFFSET TIME OUT ALARM** indicates that during calibration the Inner Loop Offset value did not settle. This could result in less accurate positioning.	Repeat the stroke calibration to get a more accurate ILO value. To proceed using the less accurate ILO value, this error may be cleared by briefly pushing the QUICK-CAL button. Lowering the gain setting may help if the actuator is unstable during the calibration. Gain settings can be physically adjusted on the device. A lower letter represents lower gain.
RGYG	**NON-SETTLE TIME OUT ALARM** indicates that during calibration, the position feedback sensor did not settle.	Check for loose linkages or a loose positioner sensor. This error may be cleared by briefly pushing the QUICK-CAL button, which will force the positioner to use the parameters from the last good calibration. This error may appear on some very small actuators during the initial calibration. Recalibrating may clear the problem.
RGYY	**NO MOTION TIME OUT ALARM** indicates that during calibration, there was no motion of the actuator based on the current stroke time configuration.	Check linkages and air supply to make sure the system is properly connected. If the time out occurred because the actuator is very large then simply retry the Quick cal and the positioner will automatically adjust for a larger actuator by doubling the time allowed for movement. This error may be cleared by briefly pushing the QUICK-CAL button, which will force the positioner to use the parameters from the last good calibration.
RGRR	**FACTORY RESET STATE** indicates the unit has had a factory reset and has not yet been calibrated. The unit will not respond to commands and will remain in the failsafe position until a calibration is successfully completed.	Calibrate. Proper Valvesight operation will require stroke, actuator, and friction calibration to be completed. This indicator can be disabled.
RYYG	**SUPPLY PRESSURE LOW ALARM** (user set) indicates that the supply pressure is below the user set alarm limit. Low supply pressure can cause poor valve response or positioner failure. The minimum recommended supply pressure is 30 PSI (2.1 bar) for proper operation. The unit will fail at less than approximately 17 PSI (1.2 bars). Low supply pressure indications can also be caused by pneumatic leak.	Regulate the supply pressure at the positioner above 30 PSI (2.1 bar). Recalibrate pressure sensors. Ensure system air/gas supply is adequate. Repair kinked supply tubing. Check the pressure sensor board connections and replace pressure sensor board if necessary. Check for pneumatic leaks in the actuator and actuator tubing. See DTM screen: Health Status/Actuator Health.
**RRGG	**PILOT RELAY RESPONSE ALARM** (user set) indicates that the pilot relay is sticking or extremely slow to respond. This affects the responsiveness, increases the chance of limit cycling and excessive air consumption. The pilot relay consists of the driver module assembly with piezo (I-P relay) which is coupled to the spool valve. Delayed response can be caused by a partially clogged piezo or debris, oil, corrosion, or ice on the spool, or low supply pressure.	Check response of the valve. If OK, adjust Pilot Relay Response limits. Check the supply pressure. Check the spool for debris, oil, corrosion, ice on the spool. Clean or replace the spool assembly. Replace the piezo or driver module assembly. Maintain a clean, water-free air/gas supply. See DTM screen: Health Status/Positioner Health. This indicator can be disabled.
**RRGY	**FRICTION LOW ALARM** (user set) indicates the friction has passed below the user set limit. The alarm indicates a more severe condition than the warning.	Check for a packing leak. Tighten or replace the valve packing. See DTM screen: Health Status/Valve Health. This indicator can be disabled.
**RRGR	**FRICTION HIGH ALARM** (user set) indicates the valve/actuator friction has passed the user set limit. The alarm indicates a more severe condition than the warning. High friction can cause loop oscillations, poor position control, jerky motion, or valve sticking. It can be caused by build-up from the process on the stem, trim or seat, by a failing bearing or guides in the valve and actuator, galling of the trim or stem, excessively tightened packing, linkages, or other valve/actuator mechanical issues.	Determine if the friction is significantly interfering with the valve control. If not, consider increasing the friction warning limit. Consider the following to reduce friction: Stroke the valve to clear off build-up. Clear any external mechanical obstruction, loosen the packing, clean the stem, repair or replace the actuator. Highly localized friction or very jerky travel can indicate internal galling. Repair or replace internal valve components. See DTM screen: Health Status/Valve Health This indicator can be disabled.
RRYG	**PIEZO VOLTAGE ALARM** indicates the portion of the circuit board that drives the piezo is bad, or piezo valve itself is bad.	If the unit is functioning and controlling replace the piezo, if it does not operate replace the main circuit board. This indicator can be disabled.
RRYR	**PILOT RELAY POSITION LIMIT ALARM** indicates the pilot relay (spool) appears to be fixed at a limit and is not responding. This could be due to low supply pressure, a hall sensor that is out of calibration, a broken piezo, stuck spool, or a wire connection problem.	Check for adequate supply pressure. A hall sensor problem may be cleared by briefly pushing the QUICK-CAL button, which will force the positioner to use the parameters from the last valid calibration. Check the internal wiring harnesses for good connections. Check the spool valve for sticking problems. If the positioner still does not operate replace the piezo, driver module assembly, and/or spool assembly.
RRRY	**ELECTRONICS ERROR OR ALARM** indicates the internal data was not updated correctly. This may affect the function of the positioner in various ways or not at all. This can be caused when intermittent operation occurs when connecting power.	Error may self clear with time. If error persists, cycle power and complete a QUICK-CAL. If the error still persists, Check internal wiring and connectors for electrical shorts or opens. If no problems are found and alarm persists, replace the main circuit board.
RRRR	**POSITION DEVIATION ALARM** (user set) indicates the difference between the command and the actual position has been greater than the user-set limit for longer than a user-set time.	Review active alarms and warnings to find root causes of this alarm. See DTM screen: Alerts/Command Deviation. This indicator can be disabled.

8 Maintenance and Repair

8.1 Driver Module Assembly

The driver module assembly moves the spool valve by means of a differential pressure across its diaphragm. Air is routed to the driver module from the regulator through a flexible hose. A barbed fitting connects the flexible hose to the driver module assembly. Wires from the driver module assembly connect the hall effect sensor and the piezo valve modulator to the main PCB assembly.

Driver Module Assembly Replacement

To replace the driver module assembly, refer to Figures 11-15 and 25 and proceed as outlined below. The following tools are required:

- Flat plate or bar about ⅛" thick
- Phillips screwdriver
- ¼" nutdriver

WARNING: Observe precautions for handling electrostatically sensitive devices.

1. Make sure the valve is bypassed or in a safe condition.
2. Disconnect the power and air supply to the unit.
3. Remove the driver module cover (Figure 14), using a flat bar or plate in the slot to turn the cover.
4. Remove the spool valve cover by removing the screw and sliding the cover assembly backwards until the tab is clear of the slot (Figure 12). The sheet metal cap, hydrophobic filter, and O-ring should be removed with the spool valve cover. It is not necessary to take these parts out of the spool valve cover.
5. Being careful not to lose the nylon washer, remove the Phillips-head screw that attaches the driver module to the main housing (Figure 13).

WARNING: Spool (extending from the driver module assembly) is easily damaged. Use extreme caution when handling spool and spool valve block. Do not handle the spool by the machined portions of spool. The tolerances between the block and spool are extremely tight. Contamination in the block or on the spool may cause the spool to hang.

6. Remove the spool valve block by removing the two Phillips-head screws and carefully sliding the block off the spool (Figure 13).
7. Carefully remove the spool by sliding the end of the spool out of the connection clip. Excessive force may bend spool.
8. Remove the main cover.

Figure 11: Driver Module Assembly

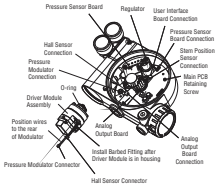

Figure 12: Spool Valve Cover Assembly

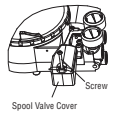

Figure 13: Spool and Block

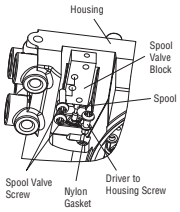

Figure 14: Driver Module Barbed Fitting

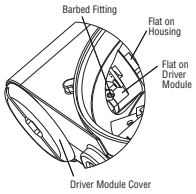

9. Remove the plastic board cover by removing the three retaining screws. (See Figure 14.)
10. Disconnect the flexible tubing from the barbed fitting at the driver
11. Use the ¼" nutdriver to remove the barbed fitting from the driver module assembly.
12. Unplug the two wiring connections that link the driver module assembly to the main PCB assembly.
13. Feed the two wires on the driver module back into the driver module compartment so that they stick out the driver module opening (See Figure 11). This will allow the driver module to thread out without tangling or cutting the wires.
14. Grasp the base of the driver module and turn it counterclockwise to remove. After it is threaded out, carefully retract the driver module from the housing.
15. Remove the barbed fitting from the side of the new driver module using the ¼" nutdriver.
16. Verify that the O-ring is in place on the top of the new driver module. Lay the wires back along the side of the driver module as shown in Figure 11 and hold the wires in position by hand.
17. Gently insert the driver module into the driver module compartment in the housing. Turn the driver module clockwise to thread it into the housing. Continue rotating the driver module until it bottoms out.
18. Once the driver module has bottomed out so that the threads are fully engaged, rotate the driver module counter clockwise until the flat on the driver module and the flat on the housing are aligned. This will align the screw hole for the next step.
19. Verify that the nylon gasket is in the counter bore in the driver module retaining screw hole as shown in Figure 13.
20. Insert a driver-to-housing screw into the driver housing through the counterbored hole in positioner main housing. Tighten with a Phillips screwdriver.
21. Reach through the main compartment into the driver module compartment of the positioner and install the barbed fitting on the side of the driver module using the ¼" nutdriver.

    ! NOTE: Do not mix the barbed fitting with those from older Logix positioners. Older models contain orifices that will not work in the Logix 3200MD model. Orifices are brass-colored, barbed fittings are silver-colored.
22. Reconnect the flexible tube coming from the regulator to the barbed fitting.
23. Feed the driver module wires into the main chamber of the housing, and connect them to the main PCB Assembly.
24. Verify that the three O-rings are in the counterbores on the machined platform where the spool valve block is to be placed (Figure 25).
25. Carefully slide the spool into the connecting clip on the top of the driver module assembly.
26. Carefully slide the block over the spool, using the machined surface of the housing base as a register (Figure 13). Slide the block toward the driver module until the two retaining holes line up with the threaded holes in the base.
27. Install two spool-valve screws and tighten securely with a Phillips screwdriver (See Figure 13).
28. Slide the spool valve cover assembly over the spool valve until the tang engages into the housing slot. Install spool valve cover screw and tighten securely (See Figure 12).
29. Install the plastic board cover. Insert the three retaining screw through the plastic cover into the threaded boss and tighten evenly, using a Phillips screwdriver. Do not overtighten (See Figure 15).
30. Reconnect power and air supply to the positioner and perform a stroke calibration.
31. Reinstall all covers.

Figure 15: Main PCB Assembly

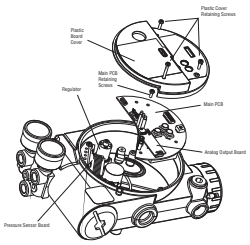

8.2 Regulator

The regulator reduces the pressure of the incoming supply air to a level that the driver module can use.

Replacing Regulator

To replace the regulator, refer to Figures 11 and 15 and proceed as outlined below. The following tools are required:

- Phillips screwdriver
- ¼" nutdriver

WARNING: Observe precautions for handling electrostatically sensitive devices.

1. Make sure valve is bypassed or in a safe condition.
2. Disconnect the power and air supply to the unit.
3. Remove the main cover.
4. Remove the plastic board cover by removing the three retaining screws (See Figure 15).
5. Remove the five wire connections from the main PCB assembly (six wire connections if the unit is equipped with the 4-20 mA analog output option).
6. Remove the retaining screw from the main PCB assembly and lift the main PCB out of the housing.
7. Remove the four screws from the regulator base. Verify that as regulator is removed, the O-ring and filter remain in the counterbore (please See Figure 11).
8. Remove tubing and barbed fitting from the regulator base.
9. Install barbed fitting and tubing to the new regulator.
10. Verify O-ring and filter are in the counterbore. Install new regulator using 8-32 x ½" screws.

    ! NOTE: Do not mix the regulator with those from older Logix positioners. Older models contain regulators with different settings that will not work in the Logix 3200MD model. The regulator pressure setting is printed on the top of the regulator. The Logix 3200MD regulator is set to 17.4 psig.
11. Install the main PCB into the housing. Insert the retaining screw through the board into the threaded boss and tighten evenly, using a Phillips screwdriver. Do not overtighten.
12. Reinstall the five wire connections (six wire connections if the unit is equipped with the 4-20 mA analog output option).
13. Install the plastic board cover. Insert the three retaining screws through the plastic cover into the threaded boss and tighten evenly, using a Phillips screwdriver. Do not overtighten (See Figure 15).
14. Reinstall all covers.

8.3 Checking or Setting Internal Regulator Pressure

To check or set the internal regulator pressure, refer to Figure 16 and proceed as outlined below. The tools and equipment used in the next procedure are from indicated vendors. The following tools are required:

- Calibrated pressure gauge (0 to 30 psi)
- 1/16" flexible tubing
- Barbed Tee (Clippard Minimatic part number T22-2 or equivalent)
- 3/32" Allen wrench
- ⅜" open-end wrench

WARNING: Observe precautions for handling electrostatically sensitive devices.

Figure 16: Driver Module Regulator Pressure Check

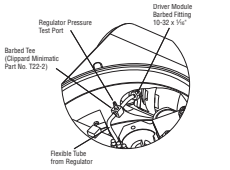

1. Make sure the valve is bypassed or in a safe condition.
2. Remove the main cover.
3. Remove the plastic board cover by removing the three retaining screws.
4. Remove the 1/16" flexible tubing from the barbed fitting on the side of the driver module.
5. Obtain a barbed tee and two pieces of 1/16" flexible tubing, a few inches in length each.
6. Position the barbed tee between the internal regulator and the driver module by connecting the 1/16" flexible tubing, found in the positioner, to one side of the barbed tee. Using one of the new flexible tubing pieces, connect the barbed tee to the barbed fitting on the side of the driver module. Connect the remaining port on the barbed tee to a 0 to 30 psi pressure gauge.
7. Reconnect the air supply to the positioner and read the internal regulator pressure on the 0 to 30 psig gauge. The internal pressure should be set to 17.4 ±0.2 psig. If adjustment is needed, loosen the set screw retaining nut on the top of the regulator using the ⅜" open-end wrench. Then adjust the regulator pressure by turning the set screw on the top of the regulator with the 3/32" Allen wrench.

8. Once the regulator pressure is set, tighten the set screw retaining nut on the top of the regulator, remove the air supply to the positioner, remove the barbed tee, and reconnect the flexible tubing from the regulator to the barbed fitting on the side of the driver module.
9. Install the plastic board cover. Insert the three retaining screws through the plastic cover into the threaded boss and tighten evenly, using a Phillips screwdriver. Do not overtighten (See Figure 15).
10. Reinstall all covers.

8.4 Spool Valve

The spool valve routes the supply air to one side of the actuator while venting the opposite side (See Figure 1). The position of the spool valve is controlled by the driver module.

Replacing the Spool Valve

To replace the spool valve, refer to Figures 12, 14 and 25 and proceed as outlined below. The following tools are required:

- Phillips screwdriver

1. Make sure the valve is bypassed or in a safe condition.
2. Disconnect the power and air supply to the unit.
3. Remove the spool valve cover by removing the screw and sliding the cover assembly backwards until the tab is clear of the slot. It is not necessary to remove the sheet metal cap, hydrophobic filter, or O-ring from this assembly (Figure 14).

   WARNING: The spool (extending from the driver module assembly) is easily damaged. Use extreme caution when handling spool and spool valve block. Do not handle the spool by the machined portions of spool. The tolerances between the block and spool are extremely tight. Contamination in the block or on the spool may cause the spool to hang.
4. Remove the spool valve block by removing the two Phillips-head screws and carefully sliding the block off the spool (Figure 12).
5. Carefully remove spool by sliding end of spool out of connecting clip. Excessive force may bend the spool.
6. Verify that the three O-rings are in the counterbores on the machined platform where the new spool valve block is to be placed (Figure 25).
7. Carefully slide the spool into the connecting clip of the driver module assembly.
8. Carefully slide the block over the spool, using the machined surface of the housing base as a register (Figure 12). Slide the block toward the driver module until the two retaining holes line up with the threaded holes in the base.
9. Install two spool valve screws and tighten securely with a Phillips screwdriver (See Figure 13).
10. Slide the spool valve cover assembly over the spool valve until the tang engages into the housing slot. Install the spool valve cover screw and tighten securely (See Figure 12).
11. Reconnect power and air supply to the positioner and perform a stroke calibration.

8.5 Spool Valve Cover

The spool valve cover incorporates a coalescing filter element in a two-piece cover. This protects the spool valve chamber from dirt and moisture and provides a low back pressure vent for exhaust air from the spool valve.

Replacing Filter in Spool Valve Cover

To replace the filter in the spool valve cover, refer to Figures 12 and 17 and proceed as outlined below. The following tools are required:

- Phillips screwdriver

1. Remove the spool cover by removing the screw and sliding the cover assembly backwards until the tab is clear of the slot. The sheet metal cover may be removed and cleaned with a brush or by blowing out with compressed air (Figure 12).
2. Remove the O-ring from around the hydrophobic filter element and set aside (Figure 17).
3. Remove the molded filter element by pulling it straight out of the chamber cover vent piece.
4. Install O-ring into base of chamber cover vent piece as shown in Figure 17.
5. Place new molded filter element into the chamber cover vent piece. This filter element provides part of the track to secure the O-ring installed in the last step.
6. Place spool valve shroud onto spool valve cover.
7. Place the spool valve cover assembly in place by setting it on the ramp and sliding it until the tab seats in the slot (Figures 12 and 17) and secure with a 8-32 screw.

Figure 17: Spool Valve Cover Assembly

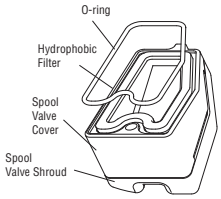

8.6 Stem Position Sensor

The position feedback assembly transmits valve positions information to the processor. This is accomplished by means of a rotary position sensor that connects to the valve stem through a feedback linkage. To provide for accurate tracking of the pin in the slot, the follower arm is biased against one side of the slot with a rotary spring. This spring also automatically moves the position feedback assembly to its limit in the unlikely event of failure of any component in the linkage.

Stem Position Sensor Replacement

To replace the stem position sensor, refer to Figure 15, 18 and 25 and proceed as outlined below. The following tools are required:

- Phillips screwdriver

  WARNING: Observe precautions for handling electrostatically sensitive devices.

1. Make sure the valve is bypassed or in a safe condition.
2. Disconnect the power and air supply to the unit.
3. Remove the main cover.
4. Remove the plastic board cover by removing the three retaining screws (See Figure 15).
5. Disconnect the position sensor wires from the main PCB assembly.
6. Remove the two rotary position sensor-retaining screws and lift the sensor out of the housing.
7. Turn the new position sensor shaft until the dot on the side of the shaft is aligned with the wires on the side of the position sensor (Figure 18).
8. Insert the position sensor into the shaft with the wires pointing toward the main PCB assembly. Turn the position sensor clockwise until bolting slots align with the housing screw holes and the wires on the sensor protrude over the main PCB assembly.

   ! NOTE: Do not mix the position sensor with those from older Logix positioners. Older models contain sensors with different ranges that will not work in the Logix 3200MD model. The wires on the Logix 3200MD position sensor are red, white and black.
9. Carefully center the position sensor on the shaft bore, insert and tighten the screws. Do not overtighten.
10. Route the wires along the side of the position sensor and reconnect to the main PCB assembly.
11. Install the plastic board cover. Insert the three retaining screws through the plastic cover into the threaded boss and tighten evenly, using a Phillips screwdriver. Do not overtighten (See Figure 15).
12. Reinstall all covers.
13. Reconnect power and air supply to the positioner and perform a stroke calibration.

Figure 18: Stem Position Sensor Orientation

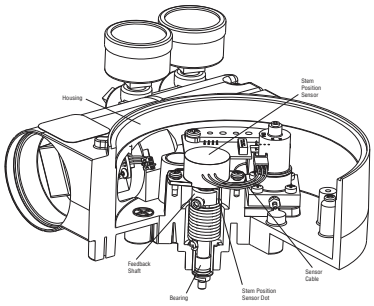

8.7 Main PCB Assembly

The main printed circuit board (PCB) assembly contains the circuit board and processor that perform control functions of the positioner. The main PCB is to be replaced as a unit. None of the components on the main PCB are serviceable.

Replacing Main PCB Assembly

To replace the main PCB assembly, refer to Figure 11 and 15 and proceed as outlined below. The following tool is required:

- Phillips screwdriver

  WARNING: Observe precautions for handling electrostatically sensitive devices.

1. Make sure the valve is bypassed or in a safe condition.
2. Disconnect the power and air supply to the unit.
3. Remove the main cover.
4. Remove the plastic board cover by removing the three retaining screws (See Figure 15).
5. Remove the five wire connections from the main PCB assembly (six wire connections if the unit is equipped with the 4-20 mA analog output option) (See Figure 11).
6. Remove the retaining screw from the main PCB assembly and lift the main PCB out of the housing (See Figure 15).
7. Install the new main PCB into the housing. Insert the retaining screw through the board into the threaded boss and tighten, using a Phillips screwdriver. Do not overtighten.
8. If the old main PCB is equipped with a 4-20 mA analog output board, gently lift the board off the main PCB. Align the two connectors of the 4-20 mA output board with the mating sockets on the main PCB and gently press the connectors together.
9. Reinstall the five wire connections (six wire connections if the unit is equipped with the 4-20 mA analog output option) (See Figure 11).
10. Install the plastic board cover. Insert the three retaining screws through the plastic cover into the threaded boss and tighten evenly, using a Phillips screwdriver. Do not overtighten (See Figure 15).
11. Reinstall all covers.
12. Reconnect power and air supply to the positioner and reconfigure the positioner being sure to perform a stroke calibration.

8.8 Pressure Sensor Board

The pressure sensor board contains two pressure sensors that measure the pressure on output ports 1 and 2. The actuator pressure sensors are used in the positioner control algorithm to enhance valve stability. In positioners with Advanced diagnostics, pressure data is gathered for supply pressure alarm, signatures and data logging. In positioners with Pro diagnostics, pressure data is used for full on-line diagnostic analyses. For optimal performance, the actuator pressure sensors need to be calibrated. The actuator pressure sensor calibration is performed using a HART 375 Handheld Communicator or configuration software such as ValveSight.

Removing the Pressure Sensor Board

To replace the pressure sensor board, refer to Figures 11, 15 and 25 and proceed as outlined below. The following tools are required:

- Phillips screwdriver

  WARNING: Observe precautions for handling electrostatically sensitive devices.

1. Make sure the valve is bypassed or in a safe condition.
2. Disconnect the power and air supply to the unit.
3. Remove the main cover.
4. Remove the plastic board cover by removing the three retaining screws (See Figure 15).
5. Disconnect the ribbon cable on the pressure sensor board from the PCB assembly (See Figure 11).
6. Remove the two screws holding the pressure sensor board to the housing. Lift the metal stiffener plate off the pressure sensor board and set aside for future use.
7. Remove the pressure sensor board.

Installing the Pressure Sensor Board

The pressure sensor board is installed on the advanced model only. To install the pressure sensor board, refer to Figures 11, 15 and 25 and proceed as outlined below. The following tools are required:

- Phillips screwdriver
- Torque wrench

  WARNING: Observe precautions for handling electrostatic sensitive devices.

1. Verify that the two pressure sensor O-rings (item 15) are in place in the housing.
2. Set the pressure sensor board assembly in place so that the O-rings make contact with the faces of the pressure sensors.
3. Place the metal stiffener plate (item 12) on top of the pressure sensor board over the pressure sensors and align the two holes in the pressure sensor plate with the threaded bosses in the housing.
4. Insert two screws through the stiffener plate and pressure sensor board into the threaded holes in the housing and tighten evenly, to 8 in-lb.
5. Connect the ribbon cable on the pressure sensor board to the main PCB assembly.

6. Install the plastic board cover. Insert the three retaining screws through the plastic cover into the threaded boss and tighten evenly, using a Phillips screwdriver. Do not overtighten.
7. Reinstall all covers.
8. Reconnect power and air supply to the positioner. Use ValveSight or a handheld communicator to perform a pressure sensor calibration.

8.9 Customer Interface Board

The customer interface board provides a connection point inside the explosion-proof housing for all hookups to the positioner. Calibration of the loop current and the analog output current (optional) are performed using a HART 375 Handheld Communicator or configuration software such as ValveSight.

Replacing the Customer Interface Board

To replace the customer interface board, refer to Figures 6, 11, 15 and 25 and proceed as outlined below. The following tool is required:

- Phillips screwdriver

  WARNING: Observe precautions for handling electrostatic sensitive devices.

1. Make sure the valve is bypassed or in a safe condition.
2. Disconnect the power and air supply to the unit.
3. Remove the main cover.
4. Remove the plastic board cover by removing the three retaining screws (See Figure 15).
5. Remove the five wire connections from the main PCB assembly (six wire connections if the unit is equipped with the 4-20 mA analog output option) (See Figure 11).
6. Remove the retaining screw from the main PCB assembly and lift the main PCB out of the housing (See Figure 15).
7. Remove the user interface cover.
8. Disconnect the field wiring from the customer interface board terminals and remove the three screws that hold the customer interface board in the housing (See Figure 6).
9. Remove the customer interface board, carefully pulling the wiring through the bore.
10. Verify that the O-ring is in place in the counterbore in the positioner housing.
11. Feed the wires on the back of the new customer user interface board through the passageway into the main chamber of the housing.
12. Set the customer interface board in place and secure with three screws (See Figure 6).
13. Reconnect the field wiring to the customer interface board terminals.
14. Install the main PCB into the housing. Insert the retaining screw through the board into the threaded boss and tighten evenly, using a Phillips screwdriver. Do not overtighten.
15. Reinstall the five wire connections (six wire connections if the unit is equipped with the 4-20 mA analog output option) on the main PCB assembly (See Figure 11).
16. Install the plastic board cover. Insert the three retaining screws through the plastic cover into the threaded boss and tighten evenly, using a Phillips screwdriver. Do not overtighten (See Figure 15).
17. Reinstall all covers.

9 Optional Hardware

9.1 Vented Design

(See Figures 19 and 20)

A standard Logix 3200MD positioner is vented directly to the atmosphere. When supply air is substituted with sweet natural gas, piping must be used to route the exhausted natural gas to a safe environment. This piping system may cause some positioner back pressure in the main chamber (from the modulator and regulator) and spool chamber (from the actuator). Back pressure limitations are described below.

Two chambers must be vented on the Logix 3200MD positioners: the main housing chamber and the spool valve chamber (Figures 19 and 20). The main chamber vent is located on the backside of the positioner (See Figure 19). Vented-design Logix 3200MD positioners are supplied from the factory with a fitting installed in the main chamber vent. Connect the necessary tubing/piping to this fitting to route the exhausted natural gas to a safe environment.

The maximum allowable back pressure from the collection device on the main housing vent is 2.0 psig (0.14 barg). Vent flow rate is 0.5 std ft³/min (1.4 std liter/min).

WARNING: The back pressure in the main housing must never rise above 2.0 psig (0.14 barg).

Figure 19: Main Housing Vent

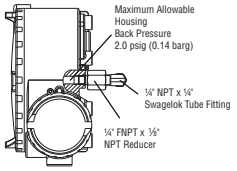

Figure 20: Spool Cover Vent

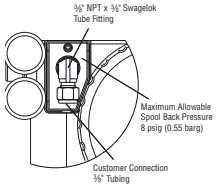

The spool valve chamber (See Figure 20) must also be vented through the spool valve cover. Vented-design Logix 3200MD positioners are supplied from the factory with a fitting installed in the spool valve cover (item SKU 179477). Connect the necessary tubing/piping to this fitting to route the exhausted natural gas to a safe environment. The maximum allowable back pressure in the spool valve chamber is 8 psig (0.55 barg). Pressures greater than 8 psig will cause vented gas to leak past the spool cover O-ring to the atmosphere and will result in overshoot of the positioner.

9.2 HART Modem

The HART modem is a device that connects to the serial communications port of a computer. This modem converts the RS-232 COM port signals to the HART signal. A HART modem is optional in ValveSight since a MUX can be used in its place. The HART modem takes power from the RS-232 COM port lines. If using a laptop computer running on an internal battery, HART communication may become erratic as the batteries begin to lose charge. This is due to a reduction in HART modem power. Allow batteries to recharge or apply AC adapter power to the laptop to correct the problem. A HART modem is available through your Flowserve representative. (Please refer to Section 12 for part numbers.)

When using a HART modem with ValveSight or when using the HART 375 handheld, the leads can be connected anywhere across the 4-20 mA current signal. The leads are not polarity sensitive. When using a filter, the connection must be made between the filter output and the Logix 3200MD (See Figure 22).

Figure 21: HART VHF Filter Schematic

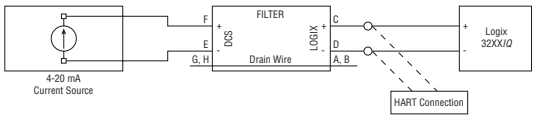

9.3 4-20 mA Analog Output Board

The Logix 3200MD digital positioner can be supplied to provide an analog feedback signal of the stem position. This option can also be retrofitted in the field. The 4-20 mA analog output board is wired in series with a 12.5 to 40 VDC power supply (See Figure 23). This position feedback option has the following features and specifications:

- Does not interfere with positioner operation.
- Calibration of the analog output signal is performed using a HART 375 Handheld Communicator or configuration software such as ValveSight.
- In normal operation, the ouput follows the actual position of the valve whenever possible, including during all failure modes. During loss of power, the output of ≤ 3.15 mA is transmitted. When configured with the safety annunciation feature, the current will fall below 3.6 mA when safety critical alarms are triggered. The safety annunciation feature is in effect if the following are both true:

1) The software version is 2.05 - 2.07, or the software version is 2.08 or later and the safety annuciation has been enabled.

2) A safety-critical annunciation is in progress.

See Section 10 for more details.

- Immune to RFI/EMI disturbances.
- Available for explosion-proof and safe applications (CSA, FM). For I.S. installations a sepatate barrier is required. Refer to product label and Flowserve drawing 198736

Replacing the 4-20 mA Analog Output Board

To replace the 4-20 mA analog output board, refer to Figures 11, 15 and 25 and proceed as outlined below. The following tools are required:

- Phillips screwdriver

WARNING: Observe precautions for handling electrostatically sensitive devices.

Figure 22: Analog Output Board Power

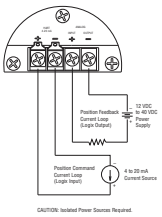

1. Make sure the valve is bypassed or in a safe condition.
2. Disconnect the power and air supply to the unit.
3. Remove the main cover.
4. Remove the plastic board cover by removing the three retaining screws (See Figure 15).
5. Disconnect the two wire connection from the side of the 4-20 mA analog output board.
6. Gently lift the 4-20 mA analog output board off the main PCB assembly.
7. Align the two connectors on the new 4-20 mA analog output board with the mating sockets on the main PCB board and gently press the connectors together.
8. Connect the two wire connection coming from the User Interface board to the side of the 4-20 mA analog output board.
9. Install the plastic board cover. Insert the three retaining screws through the plastic cover into the threaded boss and tighten evenly, using a Phillips screwdriver. Do not overtighten.
10. Connect the Analog Output filed termination wiring to the Analog Output terminals on the User Interface board (See Figure 23.)
11. Reinstall all covers.

Figure 23 4-20 mA Analog Output Board

10 Requirements for Safety Integrity

This section provides information and additional user responsibilities in order to meet Safety Integrity Level 2 (SIL 2) per IEC 61508 Parts 1-3.

10.1 Fail Safe State

The fail safe state for the Logix 3200MD positioner:

- Fail Safe State 1: The spool valve is at less than 5% of full stroke such that Output (Port) 1 is venting and Output (Port) 2 is open to supply pressure.
- Fail Safe State 2: The spool valve is at greater than 95% of full stroke such that Output (Port) 1 is supply pressure and Output (Port) 2 is open to venting.
- **! NOTE** that these represent the fail safe state of the positioner. The valve fail safe state may be different depending on spring configuration and tubing. Ensure the valve fail-safe state is appropriate for your application.

10.2 Safety Function

The Logix 3200MD positioner moves to fail-safe state upon the following conditions:

- Loss of supply pressure (less than approximately 7 psi).
- Fail Safe State 1
- Removal of analog input power (less than 4.0 mA)
- Fail Safe State 1
- Disconnection of feedback arm mechanism.
- Fail Safe State 1 or 2 (configuration dependent).

The Logix 3200MD positioner detects and annunciates the following safety related conditions:

- Analog input less than approximately 2.0 mA.
- Analog output power less than approximately 12.5 V.
- Pilot Relay Response Alarm (user adjustable settings)
- Position Deviation Alarm (user adjustable settings)
- Pilot Relay Position Limit Alarm

For a detailed description of these alarms, See section 7.10 Logix 3200MD Status Conditions.

10.3 Fail Safe State Response Time

A typical response time for the spool to move to a fail safe state due to a complete and sudden loss of supply pressure or a sudden command change is less than 50 ms*. The response time may be slower, possibly up to 1 second with subzero (F) temperatures.

A typical response time for the spool to move to a fail safe state due to linkage pin failure is less than 200 ms*. The response time may be slower with stroke lengths longer than 8 inches.

A typical response time for a valve to move to a fail safe state due to a complete and sudden loss of supply pressure or a sudden command change can be less than 150 ms*. However, the response time will vary widely with actuator size, stroke length, starting position, fail safe direction, tubing size, supply pressure, and temperature. The positioner air flow capacity affects the speed of the valve moving to a fail-safe position. See section 4.1 for air flow capacity. Test the final valve assembly response time to ensure it meets your requirements.

*Tests were with a 25 inch double acting actuator, ambient temperature 74°F (23.3 °C), 60 PSI (4.1 bar) supply, quarter inch tubing, starting at 50% open, moving to close, .75 inch stroke, 1.5 inch feedback arm.

10.4 Diagnostic Annunciation and Response Time

The Flowserve 3200MD Positioner will report the conditions below within 1.0 second of occurrence by transition of the Analog Output to less than or equal to 3.6 mA for as long as the condition exists.

- Analog input less than approximately 2.0 mA.
- Analog output power less than approximately 12.5 V.
- Detection of one of the following safety related alarms.
  - Pilot Relay Response Alarm (user adjustable settings)
  - Position Deviation Alarm (user adjustable settings)
  - Pilot Relay Position Limit Alarm

Upon detection of the alarms, the Analog Output will remain at less than or equal to 3.6 mA for at least 5 seconds or as long as the alarm persists.

Should any of the safety related alarms arise, the positioner will continue to attempt to control to the analog input signal.

The settings of the Pilot Relay Response Alarm and the Position Deviation Alarm affect the time between the occurrence of a physical problem and the generation of the alarm. Ensure these settings are adjusted to an acceptable level. The Pilot Relay Position Limit Alarm can take up to 8 seconds to generate if the spool sticks suddenly.

10.5 Maximum Achievable SIL

The Flowserve 3200MD Valve Positioner covered by this safety manual is suitable for use in low demand mode of operation Safety Integrity Functions (SIF) up to SIL 2 in simplex (1oo1) configurations. The achieved SIL for a particular SIF needs to be verified by PFDavg calculation for the entire SIF including the failure rates of the associated sensors and valves that are also part of the SIF.

Use of the Flowserve 3200MD Valve Positioner in a redundant (1ooN) configurations is also limited to SIL 2.

For details, contact your Flowserve representative for Failure Mode, Effects, and Diagnostics Analysis (FMEDA) report number FLO 09-11-42 R001 for Logix 3200MD.

10.6 Model Selection and Specification of Flowserve 3200MD Positioner

In order to be used for SIL 2 applications as stated above, the Logix 3200MD positioner must have software version 2.05 or greater and an Analog Output board.

The model number can be viewed on the metal tag on the positioner. You may have a 3200IQ model that was upgraded to a 3200MD in which case, stickers on the cover will denote the upgrade has taken place. The software version may be verified by following the instructions in section 7.9. The presence of an Analog Output board can be verified by removing the covers and viewing the circuit board. See figure 24.

10.7 Installation

Ensure installation is properly performed according to this manual.

Ensure tubing is configured to the actuator so that the fail-safe state of the positioner matches the desired fail-safe state of the valve.

Ensure the feedback spring is configured for the appropriate fail-safe direction for the valve. For SIL 2 applications, the positioner may be ordered with the feedback spring reversed. See Fail Option Feedback in the How To Order section.

Ensure the A/O board has been installed. If no A/O board has been installed, follow installation instructions in section 9.3. **! NOTE**: After market installation of the A/O board will void FM and CSA certifications in North America.

10.8 Firmware Update

Ensure the firmware version is 2.05 or greater. The software version may be verified by following the instructions in section 7.9. Only authorized representatives of Flowserve may update firmware. If firmware update is required, contact your sales representative. See the back cover of this manual for contact information.

10.9 Required Configuration Settings

The following user settable options must be properly configured for the individual application in order to provide the designed safety integrity for that application. A method of HART communication is required such as a HART 375 Handheld Communicator or configuration software such as ValveSight.

- Calibrate the A/O board.
- Software version 2.08 or later requires the following configuration: Enable the AO safety annunciation using the ValveSight DTM or a Hand-held device. If using the DTM, locate the "Edit Variables"feature. Change variable 240 to a value of 1. If using a Hand-held device, navigate to the Configuration menu. Use the Write Register function to change variable 240 to a value of 1. The register type is "char".
- Calibrate the analog input (command). The fail safe state must correspond to the analog input command at low current. (e.g. For fail safe state = closed, low command (at least 4 mA) must correspond with fully closed. For fail-safe state of open, the low command (at least 4 mA) must correspond with fully opened.)
- Set the MPC to be active when the positioner is given an analog input command to move to the fail safe state. Guarantee tight shut-off by allowing some degree of margin taking into account command input tolerances. (For example, if the input command tolerance is +\- 0.5%, set the MPC to 2% when the fail safe state is closed.)
- Set the MPC such that during normal operation MPC is not active. When MPC is active, some diagnostics are disabled.
- Adjust the Pilot Relay Response Alarm settings as desired.
- Adjust the Position Deviation Alarm settings as desired.
- It is recommended to lock the local interface to prevent unintended adjustments of the settings by an unauthorized user.

10.10 Reliability Data

For reliability data, a detailed Failure Mode, Effects, and Diagnostics Analysis (FMEDA) report has been prepared and is available from Flowserve with all failure rates and failure modes for use in SIL verification. See FMEDA report number FLO 09-11-42 R001 for Logix 3200MD.

! NOTE that the failure rates of the associated sensors and actuators need to be accounted for in the Safety Instrumented Function (SIF) level Probability of Failure High on Demand PFDavg calculation.

10.11 Lifetime Limits

The expected lifetime of the Flowserve 3200MD Positioner is approximately 10 years. The reliability data listed the FMEDA report is only valid for this period. The failure rates of the Flowserve 3200MD Valve Positioner may increase sometime after this period. Reliability calculations based on the data listed in the FMEDA report for lifetimes beyond 10 years may yield results that are too optimistic, i.e. the calculated Safety Integrity Level may not be achieved.

10.12 Proof Testing

The objective of proof testing when used in low demand mode of operation is to detect failures within Flowserve 3200MD Valve Positioner and its associated sensors and actuators that may not be detected by the normal self diagnostics. Of main concern are undetected failures that prevent the safety instrumented function from performing its intended function.

The frequency of the proof tests (or the proof test interval) is to be determined in the reliability calculations for the safety instrumented functions for which the Flowserve 3200MD Valve Positioner is applied. The actual proof tests must be performed at least as frequently as specified in the calculation in order to maintain required safety integrity of the safety instrumented function.

The following tests need to be specifically executed when a proof test is performed. The results of the proof test need to be documented and this documentation should be part of a plant safety management system. Positioner failures that are detected should be reported to Flowserve.

To perform the proof testing, a HART communicator such as a 375 Handheld or software such as ValveSight DTM for Logix 3200MD are required.

Steps for Proof Test

Step Action

1. Bypass the safety PLC or take other appropriate action to avoid a false trip.
2. Set the analog input command to less than 2.0 mA.
3. Ensure that the attached valve is fully in the safe state (defined by application) and has moved to that position within the allowed time. This tests for all failures that could prevent the closure of the valve, including electronic and mechanical faults, as well as valve faults.
4. Inspect the 3200MD Valve Positioner for any visible damage or contamination and ensure the follower arm has sufficient spring bias.
5. Remove the bypass from the safety PLC or otherwise restore normal operation

When the tests listed above are executed a proof test coverage of 95% can be claimed.

10.13 Maintenance

Calibrations should be checked annually.

10.14 Repair and Replacement

In the unlikely event that the Flowserve 3200MD Valve Positioner fails, the failure should be reported to Flowserve. Replace faulty components according to section 8 of this manual or return the positioner to Flowserve for service.

10.15 Training Requirements

Activities specified in this manual shall be performed by a service technician trained in the installation and maintenance of process instrumentation.

Figure 24: Exploded Drawing

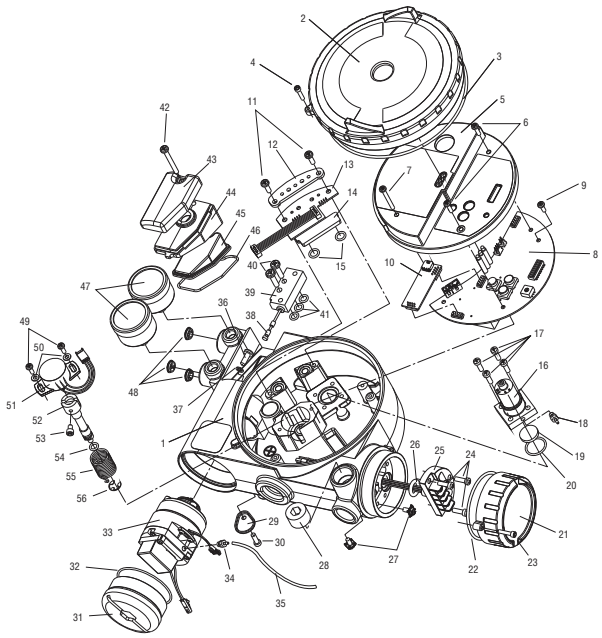

11 Parts List

Item No.	Part	Item No.	Part
1	Housing Logix 3000MD Positioner	40	Screw, Spool Valve to Housing (2)
2	Main Housing Cover	41	O-ring, Spool Valve (3)
3	O-ring, Main Housing Cover	42	Screw, Spool Valve Cover
4	Screw, Anti-rotation	43	Spool Valve Shroud
5	Plastic Main PCB Cover	44	Spool Valve Cover
6	Screw, Main PCB Cover Short (2)	45	Hydrophobic Filter, Spool Valve Chamber
7	Screw, Main PCB Cover Long	46	O-ring, Spool Valve Cover
8	Main PCB Assembly	47	Pressure Gauge, 0-160 psig (2)
9	Screw, Main PCB Assembly Retaining	48	Air Screen (3)
10	4-20 mA Analog Output Board (Optional)	49	Screw, Position Feedback Potentiometer to Housing (2)
11	Screw, Pressure Sensor Board (2)	50	Metal Washer (2)
12	Pressure Sensor Board Stiffener	51	Position Feedback Potentiometer
13	Pressure Sensor Board (Advanced Only)	52	Feedback Shaft
14	Pressure Sensor Plug Plate (Standard Only)	53	Screw, Spring to Feedback Shaft
15	O-ring, Pressure Sensor to Housing (2)	54	O-ring, Feedback Shaft
16	Pressure Regulator, 5 to 30 psig (Includes 2 O-rings)	55	Torsion Spring
17	Screw, Regulator Plate to Housing (4)	56	E-ring
18	Hex Barbed Fitting with Captive O-ring		
19	Internal Filter		
20	O-ring, Interface Plate to Housing Seal		
21	Customer Interface Cover		
22	O-ring, Customer Interface Cover		
23	Screw, Anti-rotation		
24	Screw, Customer Interface Board (3)		
25	Customer Interface Board		
26	O-ring, Customer Interface Board		
27	Grounding Screw (2)		
28	Threaded Plug		
29	Main Vent Cover		
30	Screw, Main Vent Cover		
31	Driver Module Cover		
32	O-ring, Driver Module Cover		
33	Driver Module Assembly		
34	Hex Barbed Fitting with Captive O-ring		
35	Flexible Tubing		
36	Screw, Driver to Housing		
37	Nylon Washer		
38	Spool Valve		
39	Spool Valve Block		

12 Logix 3200MD Spare Parts Kits

See Figure 25 for item numbers.

Item No.	Description	Quantity
Kit 2: Driver Module Assembly -40° to 80°C Kit, P/N 199786.999.000		
16	Pressure Regulator	1
17	Screw, Regulator to Housing	4
33	Driver Module Assembly	1
34	Hex Barbed Fitting w/ Captive O-ring	1
36	Screw, Driver to Housing	1
37	Nylon Washer	1
Kit 3: Spool Assembly Valve Kit, P/N 199787.999.000		
38	Spool	1
39	Spool Valve Block	1
40	Screw, Spool Valve to Housing	2
41	O-ring, Spool Valve	3
Kit 4: Pressure Regulator, P/N 215814.999.000		
16	Pressure Regulator with Captive O-rings	1
17	Screw, Regulator to Housing	4
Kit 7: Soft Goods Kit, P/N 199789.999.000		
3	O-ring, Main Housing Cover	1
15	O-ring, Pressure Sensor to Housing	2
20	O-ring, Regulator to Housing	1
22	O-ring, Customer Interface Cover	1
26	O-ring, Customer Interface Board	1
35	Flexible Tube	1
37	Nylon Washer	1
41	O-ring, Spool Valve to Housing	3
45	Hydrophobic Filter, Spool Valve Chamber	1
46	O-ring, Spool Valve Cover	1
54	O-ring, Feedback Shaft	1

Item No.	Description	Quantity
Kit 8: Pressure Sensor Board Kit, P/N 199791.999.000		
11	Screw, Pressure Sensor Board	2
13	Pressure Sensor Board	1
15	O-ring, Pressure Sensor to Housing	2
Kit 9: Main PCB Assembly Kit, P/N 255014.999.000		
6	Screw, Main PCB Cover Short	2
7	Screw, Main PCB Cover Long	1
8	Main PCB	1
9	Screw, Main PCB Retaining Screw	1
Kit 10: User Interface Board Kit, P/N 199793.999.000		
24	Screw, Customer Interface to Housing	3
25	Customer Interface Board	1
26	O-ring, Customer Interface Board	1
Kit 11: Analog Output Board Kit, P/N 226527.999		
10	Analog Output Board	1
Kit 12: Position Feedback Potentiometer Kit, P/N 199794.999.000		
49	Screw, Feedback Potentiometer to Housing	2
50	Metal Washer	2
51	Position Feedback Potentiometer	1

13 Logix 3200MD Mounting Kits

13.1 Valtek Mounting Kits

Table IX: Valtek Linear Mounting Kits

Spud	25 in²		50 in²*		100-200 in²	
	Standard	Handwheel	Standard	Handwheel	Standard	Handwheel
2.00	164432	164433	164434	164433		
2.62			164435	164436	164437**	164436
2.88					164437	164438
3.38					164439	164440
4.75					164439	164440

** A 50 square in², 2.00 spud with live loading requires kit number. ** Live-loading is not available on a 100 in², 2.62 spud.*

*Table X: Valtork Rotary Mounting Kits**

Spud	25 in²		50 in²*		100-200 in²	
	Standard	Optional	Standard	Optional	Standard	Optional
0.44	135429	135432	135430		135431	
0.63	135429	135437	135430	135433	135431	
0.75	135429	135438	135430	137212	135431	
0.88	135429	135439	135430	137213	135431	135434
1.12	135429		135430	137214	135431	137215
1.50	135429		135430		135431	137216
1.75	135429		135430		135431	137217

** Standard: All rotary valves with standard accessories (end of shaft mount). Optional: All rotary valves with handwheels or volume tanks (linkage design)*

13.2 Logix O.E.M. Mounting Kits

Table XI: Logix O.E.M. Mounting Kits

Brand	Model	Size	Mounting Kit	
Fisher	657 & 667	30	213905	0.5" – 1.5" stroke
		34	141410	
		40		
		50	171516	0.5" – 1.5" stroke
			171517	2" stroke
		60	171516	0.5" – 1.5" stroke
			171517	2" stroke
		70	171518	4" stroke
		80	171519	
	1250	225	173371	
		450		
		675		
	1052	33	171549	Rotary
	657-8	40	173798	
Neles	RC		171512	
	RD		178258	
Foxboro	Slid-Std		173567	
	Linear		178258	
Honeywell	VST-VA3R	17-in. dia.	173798	
	VSL-VA1D	12-in. dia.	173798	
Masoneilan (Linear Actuators)	37	9	171721	
		11		
		13	171720	
		18	173382	
		24	173896	
	38	11	173235	
		13	173234	
		15	186070	
		18	173382*	
		24	173896	
	71 Domotor	25	173325	
		50	173335	
		100	173336	
	88	6	171722	
		16	173827	
	47	B	173361	
	48	B	173361	
	"D" Domotor	200	175141	
	71-2057AB-D		176179	
	71-40413BD		176251	

Table XI: Logix O.E.M. Mounting Kits (continued)

Brand	Model	Size	Mounting Kit	
Masoneilan (Rotary Actuators)	33	B	173298	
	35	4	173298	
		6		
		7		
	70	10	173298	
Valtek	Trooper		166636	0.75" – 1.50" Std
Automax	R314		141180	HD
	SNA115		NK313A	
Vangard	37/64		175128	
Air-Torque	AT Series	AT0 – AT6	Consult factory	
Automax	SNA Series	SNA3 – SNA2000		
	N Series	N250.300		
	R Series	R2 – R5		
Bettis	RPC Series	RP – TPC11000		
	G Series	G2009-M11 – G3020-M11		
EL-O-Matic	E Series	E25 – E350		
	P Series	P35 – P4000		
Hytork	XL Series	XL45 – XL4580		
Unitorq	M Series	M20 – M2958		
Worcester	39 Series	2539 - 4239		

**Adjustable mounting kit 173798 may be needed if handwheels are used.*

13.3 NAMUR Accessory Mounting Kit Part Numbers

Use prefix "NK" and choose bracket and bolt options from the following table.

Table XII: NAMUR Accessory Mounting Kit Part Numbers

Bracket Option	Description
28	20 mm pinion x 80 mm bolt spacing
28	38 mm pinion x 80 mm bolt spacing
313	30 mm pinion x 80 mm bolt spacing
513	50 mm pinion x 130 mm bolt spacing
Bolt Option	**Description**
A	10-24 UNC bolting
B	10-32 UNF bolting
L	M5-.8 metric bolting

Example: NK313A, NAMUR Accessory Mounting Kit with 30 mm pinion x 80 mm bolt spacing and 10-24 UNC bolting.

14 Frequently Asked Questions

Q: My DCS uses 24 VDC, can I run a Logix 3200MD?
A: A DCS output current card does run from 24 VDC but the card regulates the actual current output. However, if the 24 VDC were applied directly across the terminals, nothing would limit the current and the Logix 3200MD Field Termination Board could be damaged. The current source voltage supply can be anywhere between 10 VDC to 30 VDC as long as the current is limited in the 4-20 mA range.

Q: I accidentally placed a voltage supply across the Logix 3200MD. How do I know if I damaged something?
A: The typical failure in an over-current situation is a short circuit. Your loop current will be maintained but the Logix 3200MD control board will receive no power. With power removed from the Logix 3200MD, use an ohmmeter to measure across the terminals. If the reading is a short (close to zero ohms), the Customer Interface Board must be replaced. Make sure the positive lead is on the '+' terminal and negative lead is on the '-' terminal when measuring the resistance.

Q: What is the input resistance of the Logix 3200MD?
A: The Logix 3200MD does not have a simple resistive input. When measuring the voltage across the Logix 3200MD, it only varies slightly when the current is changed from 4 mA to 20 mA (9.8 to 10.0 VDC nominal without HART communications. Add 0.3 V with HART active). This is because the Logix 3200MD is an active device. The resistance at a given current is commonly referred to as the effective resistance.

Effective Resistance = (Terminal Voltage)/Current Equation 3

For example:

at 20 mA: Effective resistance = 9.9 VDC/0.02 A = 495 Ω

The Logix 3200MD has a specification of 495 Ω @ 20 mA.

! NOTE: Your cannot measure across the terminals of an unpowered Logix 3200 and get the effective resistance.

Q: How do I know if I need a VHF HART filter?
A: If the current source is interfering with communication, it will affect both ValveSight and the HART 375 handheld. If the positioner communicates to ValveSight or the HART 375 handheld when using a current source (a 4-20 mA current calibrator, for example) and not the DCS, it indicates a filter is necessary with that current source. Some 4-20 mA calibrators that work without a filter are listed below. If one of these is available, try to connect with ValveSight or the HART 375 handheld again. If communications are established while using one of these sources but fails on the original source, a filter is needed.

Handheld 4-20 mA calibrators which do not require a filter:

- Altek Model 334
- Rochester Instrument Systems (RIS) CL-4002
- Unomat UPS-II

Q: I set the MPC at 5 percent. How will the positioner operate?
A: Assume that the present command signal is at 50 percent. If the command signal is decreased, the positioner will follow the command until it reaches 5 percent. At 5 percent, the spool will be driven fully open or fully closed, depending on the air action of the valve, in order to provide full actuator saturation and tight shutoff. The positioner will maintain full saturation below 5 percent command signal. As the command increases, the positioner will remain saturated until the command reaches 6 percent (there is a 1 percent hysteresis value added by the positioner). At this point, the stem position will follow the command signal. While in MPC, the Logix 3200MD LEDs will blink GGGY.

Q: I have MPC set to 3 percent but the valve will not go below 10 percent.
A: Is a lower soft stop enabled? The lower soft stop must be less than the lower PMC setpoint in order for the lower MPC to become active. When the lower soft stop is reached, the positioner will blink a GYGY code. When MPC is active, the positioner will blink GGGY.

Q: Will soft stops prevent the valve from going to its fail position?
A: No.

Q: What is the difference between models with Standard (3200MD), Advanced (3210MD) and Pro (3220MD) diagnostics?
A: All models use the pressure sensors in the positioner control algorithm to enhance valve stability. The model with Advanced diagnostics performs calculations such as detection of loss of pressure, diagnostic signatures and data logging. The model with Pro diagnostics adds full diagnostic capabilities including continuous on-line friction, pneumatic leak and actuation ratio analysis. Pro diagnostics support comprehensive health views in the ValveSight DTM. Partial stroke tests and long term trends of many key parameters are also available with Pro diagnostics.

Q: Can I upgrade from a Standard to Advanced or from Advanced to Pro diagnostics?
A: Yes. Upgrading can be accomplished using ValveSight DTM software. After upgrading, pressure and friction calibrations can be performed using the ValveSight DTM or the HART 375 handheld.

Q: Can I add pressure sensors to my 3200IQ and upgrade it to a 3220MD with Pro diagnostics?
A: This depends on the certifying agency. Some agencies do not allow field upgrades which change the physical configuration. If the certifying agency allows physical upgrades, the pressure sensor board assembly can be purchased and installed. A Flowserve technician can update the positioner software from IQ to the desired MD version (Advanced or Pro). If the certifying agency does not allow physical upgrades, a Flowserve technician can update the positioner software from the IQ to the desired MD version (Advanced or Pro). If the certifying agency does not allow physical upgrades, a Flowserve technician can update the positioner software to turn the 3200IQ into a 3200MD (with Standard diagnostics) allowing it to work with the ValveSight DTM. See the Logix 3200IQ IOM for instruction on removing the plug plate and installing the pressure sensors. For any questions regarding this upgrade or the certifying agencies' rules, contact the Flowserve Springville Quality Department.

Q: Does the QUICK-CAL perform all the required calibrations for an Advanced or Pro Diagnostics level Logix positioner?

A: No, the advanced diagnostics feature of the ValveSight technology requires the user to input the size of the actuator and the supply pressure into the positioner. This cannot be done with a QUICK-CAL only. Perform a Stroke, Actuator and Friction calibration through the ValveSight DTM or HART handheld.

15 How to Order

Selection		Code	Example
		3	3
Protocol	HART	2	2
Diagnostics	Standard	0	1
	Advanced (with pressure sensing)	1	
	Pro (with sensing and full ValveSight dianostics)	2	
Material	Aluminum, White Paint (Valtek)	0	0
	Stainless Steel, No Paint (Valtek)	1	
	Aluminum, Black Paint (Automax)	2	
	Aluminum, Food-Grade White Paint (Automax)	3	
	Aluminum, Black Paint (Accord)	4	
	Aluminum, Food-Grade White Paint (Accord)	5	
Design Version		MD	MD
Certifications	FM/CSA Metal Nameplate - Explosion Proof	-01	-10
	FM/CSA Metal Nameplate - Intrinsically Safe	-02	
	INMETRO Ex ia IIC Ga T4/T5; Ex ia IIIC T95C Da; Ex d IIB+H2 T5 Gb (South America)	-06	
	ATEX Metal Nameplate - II 2 GD, Ex d IIB +H_2, Ex tD A21 (GOST GGTN Ex d IIB + H_2)	-07	
	North American Metal Nameplate, Explosionproof Class I, Div 1, Intrinsically Safe, Non-Incendive	-10	
	General Purpose	-14	
	ATEX Metal Nameplate - II 1 GD, Ex ia IIC, Ex iaD A20 (Gost GGTN Ex ia IIC)	-15	
	IECEx Metal Nameplate - Ex d IIB + H_2	-16	
	IECEx Metal Nameplate - Ex ia IIC Intrinsically Safe	-21	
	ATEX: Mylar Multiple Concept Label: Explosion Proof: Ex d IIB+H_2 Ex td A21 IP65 T95°C Intrinsically Safe: Ex ia IIC, T4: Ex iaD 20 T95°C Nonincendive: II 3G Ex nL nA IIC, Ex tD A22 T95°C	-28	
	IECEx : Mylar Multiple Concept Label: Explosion Proof: Ex d IIB+H_2 T5; II 2D Ex tD A21 Intrinsically Safe: Ex ia IIC T4, Ex iaD 20 T95°C	-33	
	North America: Mylar Multiple Concept Label: FM/CSA Explosion Proof, Intrinsically Safe, Non-Incendive	-34	
	KOSHA Ex d IIB + H_2	35	
Shaft	DD 316 Stainless Steel Shaft (Valtek Standard)	-D6	-D6
	NAMUR 316 Stainless Steel (VDI/VDE 3845)	-N6	
Conduit Connections	½" NPT	-E	-M
	M20	-M	
Action	Four-way (Double-Acting)	-04	-4V
	Three-way (Single-Acting)	-03	
	Three-way Purge (Single Acting) not for use with natural gas (used to purge spring side of actuator with instrument air)	-3P	
	Four-way Vented (Double-Acting)	-4V	
	Three-way Vented (Single-Acting)	-3V	
Temperature	Low Temperature (-40°F to 176°F; -40°C to 80°C)	-40	-40
Gauges	SS with brass internals, psi (bar/kPa) (Valtek Standard)	-OG	-KS
	SS with SS internals, psi (bar/kPa)	-OS	
	SS with brass internals, psi (kg/cm2)	-KG	
	SS with SS internals, psi (kg/cm2) KS	-KS	
	No Gauges	-U	
Special Options	No special options	-OO	-OF
	4-20 mA Position Feedback	-OF	
	Remote Mount Feedback (Contact Mfg for Cert options) **	-RM	
	4-20 mA Position Feedback and Remote Mount Feedback (Contact Mfg for Cert options)**	-FR	

For each category, select the code for one of the options.

** Refer to separate IOM LGENIM0001 for Installation, Operation and Maintenance of the Remote Mount Positioner Sensor.

16 Troubleshooting

Failure	Probable Cause	Corrective Action
No LED is blinking	Current source below 3.6 mA without AO card or 3.7 mA with AO card	Verify current source is outputting at least 3.6 mA without AO card or 3.7 mA with AO card
	Incorrect wiring polarity	Check wiring for correct polarity
	Voltage of current source is not high enough	Verify that current source can supply at least 10 V
Erratic communications	Current source bandwidth not limited to 25 Hz	Maximum allowable current source rate of change is 924 mA per second
	Maximum cable length or cable impedance exceeded	Check cable conduction size, length and capacitance. Refer to Section 6.4, "Cable Requirements"
	HART modem connected to PC RS-232 port not receiving enough power	Verify laptop battery is not low
	Interference with I.S. barrier	Must use HART-compatible I.S. barrier
	Current Source stripping (filtering) HART signal.	Use the HART filter (VHF) available from Flowserve
Unit does not respond to analog commands	Unit is in digital command mode	Switch to analog command mode by doing a Command Source Reset from the local interface or with a handheld communicator or ValveSight (please refer to Section 7.8, "Command Source Reset," or the quick start guide for detailed instructions).
	Error occurred during calibration	Check blink codes on positioner and correct calibration error. Recalibrate
Valve position reading is not what is expected	Positioner tubing backwards	Re-tube the actuator
	Stem position sensor mounting is off 180°	Remount position sensor
	Stroke not calibrated	Perform QUICK-CAL
	Tight shutoff (M.P.C)* is active	Verify settings using PC or handheld software
	Customer characterization or soft stops active	Verify customer characterization and soft stops
Position is driven fully open or closed and will not respond to command	Stroke not calibrated	Check DIP switch settings and calibrate valve stroke
	Inner-loop hall sensor not connected	Verify hardware connections
	Wrong air action entered in software	Check ATO (Air-to-open) and ATC (Air-to-close) settings. Recalibrate
	Actuator tubing backward	Verify ATO/ATC actuator tubing
	Electro-pneumatic converter malfunctioning	Replace electro-pneumatic converter
	Control parameter inner-loop offset is too high/low	Adjust inner-loop offset and see if proper control resumes
Sticking or hunting operation of the positioner	Contamination of the driver module	Check air supply for proper filtering and meeting ISA specifications ISA-7.0.01. Check the spool valve for contamination
	Control tuning parameters not correct	Adjust gain settings using local gain switch
	Packing friction high	Enable the stability DIP switch on the local interface and recalibrate. If problem persists, enable pressure control with handheld communicator or ValveSight and recalibrate
	Corroded or dirty spool valve	Disassemble and clean spool valve

**M.P.C.: Minimum position cutoff*

FCD LGENIM0059-09 12/13

To find your local Flowserve representative please use the Sales Support Locator System found at:

www.flowserve.com/contact.htm

or call USA 801 489-8611

Flowserve Corporation has established industry leadership in the design and manufacture of its products. When properly selected, this Flowserve product is designed to perform its intended function safely during its useful life. However, the purchaser or user of Flowserve products should be aware that Flowserve products might be used in numerous applications under a wide variety of industrial service conditions. Although Flowserve can (and often does) provide general guidelines, it cannot provide specific data and warnings for all possible applications. The purchaser/user must therefore assume the ultimate responsibility for the proper sizing and selection, installation, operation, and maintenance of Flowserve products. The purchaser/user should read and understand the Installation Operation Maintenance (IOM) instructions included with the product, and train its employees and contractors in the safe use of Flowserve products in connection with the specific application.

While the information and specifications contained in this literature are believed to be accurate, they are supplied for informative purposes only and should not be considered certified or as a guarantee of satisfactory results by reliance thereon. Nothing contained herein is to be construed as a warranty or guarantee, express or implied, regarding any matter with respect to this product. Because Flowserve is continually improving and upgrading its product design, the specifications, dimensions and information contained herein are subject to change without notice. Should any question arise concerning these provisions, the purchaser/user should contact Flowserve Corporation at any one of its worldwide operations or offices.

© 2011 Flowserve Corporation, Irving, Texas, USA. Flowserve is a registered trademark of Flowserve Corporation.

Flowserve Corporation
Flow Control
1350 N. Mt. Springs Parkway
Springville, UT 84663
USA
Phone: 801 489 8611
Fax: 801 489 3719
Flowserve S.A.S.
12, avenue du Quebec
B.P. 645
91965 Courtaboeuf Cedex
France
Phone: 33 (0) 1 60 92 32 51
Fax: 33 (0) 1 60 92 32 99
Flowserve Pte Ltd.
12 Tuas Avenue 20
Singapore 638824
Singapore
Phone: 65 6868 4600
Fax: 65 6862 4940
Flowserve Australia Pty Ltd.
14 Dalmore Drive
Scoresby, Victoria 3179
Australia
Phone: 61 7 32686866
Fax: 61 7 32685466
Flowserve Ltda.
Rua Tocantins, 128
São Caetano do Sul, SP 09580-130
Brazil
Phone: 55 11 2169 6300
Fax: 55 11 2169 6313
Flowserve Control Valves gmbH
Control Valves - Villach Operation
Kasernengasse 6
9500 Villach Austria
Phone: +43 (0)4242 41181 0
Fax: +43 (0)4242 41181 50
Flowserve (China)
585, Hanwei Plaza
7 Guanghau Road
Beijing, China 100004
Phone: +86 10 6561 1900
Flowserve India Controls
Pvt. Ltd Plot # 4, 1A, E.P.I.P.
Whitefield Bangalore Kamataka
India 560 066
Phone: +91 80 284 10 289
Fax: +91 80 284 10 286
Flowserve Essen GmbH
Schederhofstr. 71
45145 Essen Germany
Phone: +49 (0)201 8919 5
Fax: +49 (0)201 8919 600
Kämmer Valves inc.
1300 Parkway View Drive
Pittsburgh, Pa 15205 USA
Tel.: +1 412 787 8803
Fax: +1 412 787 1944
NAF Ab
Gelbgjutaregatan 2
SE-581 87 Linköping Sweden
Phone: +46 (0)13 31 61 00
Fax: +46 (0)13 13 60 54

flowserve.com

Consolidated

IOM 1700 Series Pressure Relief Valves

Vogt Power International

Project #: V17491 / Amata ABPPS

PO #: V0010363

Tag #: 51/52 HAH10AA401
51/52 HAD10AA401

VOGT POWER INTERNATIONAL
Released: Work May Proceed
Hermiston, Pennsylvania Date: Dec-01-2016

VOGT POWER INTERNATIONAL
V17491-PV02-500-00
18-Nov-2016

GE Oil & Gas

Consolidated* 1700 Series Maxiflow*

High Pressure Safety Valves Maintenance Manual

THESE INSTRUCTIONS PROVIDE THE CUSTOMER/OPERATOR WITH IMPORTANT PROJECT-SPECIFIC REFERENCE INFORMATION IN ADDITION TO THE CUSTOMER/OPERATOR'S NORMAL OPERATION AND MAINTENANCE PROCEDURES. SINCE OPERATION AND MAINTENANCE PHILOSOPHIES VARY, GE (GENERAL ELECTRIC COMPANY AND ITS SUBSIDIARIES AND AFFILIATES) DOES NOT ATTEMPT TO DICTATE SPECIFIC PROCEDURES, BUT TO PROVIDE BASIC LIMITATIONS AND REQUIREMENTS CREATED BY THE TYPE OF EQUIPMENT PROVIDED.

THESE INSTRUCTIONS ASSUME THAT OPERATORS ALREADY HAVE A GENERAL UNDERSTANDING OF THE REQUIREMENTS FOR SAFE OPERATION OF MECHANICAL AND ELECTRICAL EQUIPMENT IN POTENTIALLY HAZARDOUS ENVIRONMENTS. THEREFORE, THESE INSTRUCTIONS SHOULD BE INTERPRETED AND APPLIED IN CONJUNCTION WITH THE SAFETY RULES AND REGULATIONS APPLICABLE AT THE SITE AND THE PARTICULAR REQUIREMENTS FOR OPERATION OF OTHER EQUIPMENT AT THE SITE.

THESE INSTRUCTIONS DO NOT PURPORT TO COVER ALL DETAILS OR VARIATIONS IN EQUIPMENT NOR TO PROVIDE FOR EVERY POSSIBLE CONTINGENCY TO BE MET IN CONNECTION WITH INSTALLATION, OPERATION OR MAINTENANCE. SHOULD FURTHER INFORMATION BE DESIRED OR SHOULD PARTICULAR PROBLEMS ARISE WHICH ARE NOT COVERED SUFFICIENTLY FOR THE CUSTOMER/OPERATOR'S PURPOSES THE MATTER SHOULD BE REFERRED TO GE.

THE RIGHTS, OBLIGATIONS AND LIABILITIES OF GE AND THE CUSTOMER/OPERATOR ARE STRICTLY LIMITED TO THOSE EXPRESSLY PROVIDED IN THE CONTRACT RELATING TO THE SUPPLY OF THE EQUIPMENT. NO ADDITIONAL REPRESENTATIONS OR WARRANTIES BY GE REGARDING THE EQUIPMENT OR ITS USE ARE GIVEN OR IMPLIED BY THE ISSUE OF THESE INSTRUCTIONS.

THESE INSTRUCTIONS ARE FURNISHED TO THE CUSTOMER/OPERATOR SOLELY TO ASSIST IN THE INSTALLATION, TESTING, OPERATION, AND/OR MAINTENANCE OF THE EQUIPMENT DESCRIBED. THIS DOCUMENT SHALL NOT BE REPRODUCED IN WHOLE OR IN PART WITHOUT THE WRITTEN APPROVAL OF GE.

© 2015 General Electric Company. All rights reserved.

Conversion Table

USCS to Metric Conversion		
USCS Unit	Conversion Factor	Metric Unit
in.	25.4	mm
lb.	0.4535924	kg
in^2	6.4516	cm^2
ft^3/min	0.02831685	m^3/min
gal/min	3.785412	L/min
lb/hr	0.4535924	kg/hr
psig	0.06894757	barg
ft lb	1.3558181	Nm
°F	5/9 (°F-32)	°C

Note: Multiply the USCS value by the conversion factor to get the metric value.

NOTICE

For valve configurations not listed in this manual, please contact your local Green Tag* Center for assistance.

© 2015 General Electric Company. All rights reserved.

Table of Contents

I. Product Safety Sign and Label System 6

II. Safety Alerts 7

III. Safety Notice 8

IV. Warranty Information 9

V. Valve Terminology 10

VI. Handling and Storage 11

VII. Design Features and Nomenclature 11

VIII. Introduction 13

IX. Consolidated 1700 Series Safety Valve 14
- A. Maxiflow Safety Valve – Flanged Inlet 14
- B. Maxiflow Safety Valve – Welded Inlet 15
- C. Valve Options 16

X. Operating Principles 17

XI. Recommended Installation Practices 18
- A. General Requirements 18
- B. Outdoor Safety Valve Installation 21
- C. Indoor Safety Valve Installation 22
- D. Coverplate Vent Piping 22

XII. Disassembly of Consolidated 1700 Series Safety Valve 23
- A. General Information 23
- B. Specific Steps 23

XIII. Maintenance Instructions 26
- A. General 26
- B. Lapping Procedure 26
  - 1. General Information 26
  - 2. To Lap the Bushing Seat 26
  - 3. To Lap Disc Seat 27
- C. Reseating Machine Information 28
- D. Spindle Runout 30
- E. Disc Replacement and Disc-Spindle Bearing Requirements 30
- F. Grinding the Compression Screw 32
- G. Thrust Bearing Surfaces 32
- H. Grinding the Lower Spring Washer 32

XIV. Inspection and Part Replacement 33
- A. General Information 33
- B. Specific Steps 33

© 2015 General Electric Company. All rights reserved.

Table of Contents

  - 1. Disc Holder 33
  - 2. Guide 33
  - 3. Clearance 33
  - 4. Disc 33
  - 5. Overlap Collar 34
  - 6. Coverplate 34

XV. Re-Assembly of Consolidated 1700 Series Safety Valve 34
- A. General Information 34
- B. Specific Steps 34

XVI. Setting and Testing 41
- A. Field Testing 41
  - A.1 General Information 41
  - A.2 Popping Point Adjustment 41
  - A.3 Ring Adjustments, Blowdown and Overlap Collar Adjustments 42
  - A.4 Restricted Lift Valves 45
  - A.5 Consolidated Hydroset/Electronic Valve Tester (EVT) 45
  - A.6 Sealing Valves After Test 45
- B. Hydrostatic Testing and Gagging 46

XVII. Troubleshooting 47

XVIII. 1700 Series Safety Valve Options 48
- A. Hydrostatic Test Plug 48
- B. Domestic Plugs 48
- C. Export Plugs 48

XIX. Maintenance Tools and Supplies 49
- A. Lapping Tools 49
  - A1. Ring Lap 49
  - A2. Lapping Plate 49
  - A3. Lapping Compound 49
- B. Gags 49
- C. Lubricant 49
- D. Wrench Sizes 50

XX. Replacement Parts Planning 51

XXI. Genuine Consolidated Parts 52

XXII. Recommended Spare Parts 52

XXIII. Manufacturer's Field Service & Repair Program 54
- A. Field Service 54
- B. Repair Facilities 54
- C. Maintenance Training 54

© 2015 General Electric Company. All rights reserved.

I. Product Safety Sign and Label System

If and when required, appropriate safety labels have been included in the rectangular margin blocks throughout this manual. Safety labels are vertically oriented rectangles as shown in the ***representative examples*** (below), consisting of three panels encircled by a narrow border. The panels can contain four messages which communicate:

- The level of potential harm from the hazard
- The nature of the hazard
- The consequence of human and/or product interaction with the hazard.
- The instructions, if necessary, on how to avoid the hazard.

The top panel of the format contains a signal word (**DANGER, WARNING, CAUTION** or **ATTENTION**) which communicates the level of potential harm from the hazard.

The center panel contains a pictorial which communicates the nature of the hazard, and the possible consequence of human and/or product interaction with the hazard. In some instances of risk to human health and safety the pictorial may, instead, depict what preventive measures to take, such as wearing wearing the appropriate personal protective equipment (PPE).

The bottom panel may contain instructions on how to avoid the hazard. If there is a risk to human health and safety this message may also contain a more precise definition of the hazard, and the consequences of human and/or product interaction with the hazard, than can be communicated solely by the pictorial.

(1) **DANGER** — Immediate hazards which WILL LIKELY result in severe personal injury or death.

(2) **WARNING** — Hazards or unsafe practices which COULD result in severe personal injury or death.

(3) **CAUTION** — Hazards or unsafe practices which COULD result in minor personal injury.

(4) **ATTENTION** — Hazards or unsafe practices which COULD result in product or property damage.

© 2015 General Electric Company. All rights reserved.

II. Safety Alerts

Follow all plant safety regulations, but be sure to observe the following:

- Always lower the working pressure before making any valve adjustment. When making ring adjustments, always gag the valve before making the adjustment. This will avoid possible personal injury.
- Do not stand in front of the discharge side of a safety valve when testing or operating.
- Hearing and eye protection should be used when testing or operating a valve.
- Wear protective clothing. Hot water can burn and superheated steam is not visible.
- When removing the safety valve during disassembly, stand clear and/or wear protective clothing to prevent exposure to splatter, or any corrosive process medium, which may have been trapped inside the valve. Ensure the valve is isolated from system pressure before the valve is removed.
- Exercise care when examining a safety valve for leakage.
- Prior to each actuation, assure that no personnel are near the valve. Steam escaping from the valve during actuation can possibly cause personal injury.
- When popping a safety valve for the first time, or after refurbishment, always be prepared to actuate the valve with the lever while standing in a safe place away from the valve. This may be done by fixing a rope to the lever for actuating the valve from a distance.
- Striking a valve which is under pressure can cause premature actuation. Never tamper with the valve when system pressure is near the valve set pressure.
- Before performing any machining on valve parts, consult GE or its authorized representative. Deviation from critical dimensions can adversely affect valve performance.

© 2015 General Electric Company. All rights reserved.

III. Safety Notice

Proper installation and start-up is essential to the safe and reliable operation of all valve products. The relevant procedures recommended by GE, and described in these instructions, are effective methods of performing the required tasks.

It is important to note that these instructions contain various "safety messages" which should be carefully read in order to minimize the risk of personal injury, or the possibility that improper procedures will be followed which may damage the involved GE product, or render it unsafe. It is also important to understand that these "safety messages" are not exhaustive. GE cannot possibly know, evaluate, and advise any customer of all of the conceivable ways in which tasks might be performed, or of the possible hazardous consequences of each way. Consequently, GE has not undertaken any such broad evaluation and, thus, anyone who uses a procedure and/or tool, which is not recommended by GE, or deviates from GE recommendations, must be thoroughly satisfied that neither personal safety, nor valve safety, will be jeopardized by the method and/or tools selected. Contact GE if there are any questions relative to tools/methods.

The installation and start-up of valves and/or valve products may involve proximity to fluids at extremely high-pressure and/or temperature. Consequently, every precaution should be taken to prevent injury to personnel during the performance of any procedure. These precautions should consist of, but are not limited to, ear drum protection, eye protection, and the use of protective clothing, (i.e., gloves, etc.) when personnel are in, or around, a valve work area. Due to the circumstances and conditions in which these operations may be performed on Consolidated products, and the possible hazardous consequences of each way, GE cannot possibly evaluate all conditions that might injure personnel or equipment. Nevertheless, GE does offer certain Safety Allerts, listed in Section II, for customer information only.

It is the responsibility of the purchaser or user of GE valves/equipment to adequately train all personnel who will be working with the involved valves/ equipment. For more information on training schedules, call 318-640-6054. Further, prior to working with the involved valves/equipment, personnel who are to perform such work should become thoroughly familiar with the contents of these instructions.

© 2015 General Electric Company. All rights reserved.

IV. Warranty Information

Warranty Statement

Warranty Statement[1] - GE warrants that its products and services will meet all applicable specifications and other specific product and service requirements (including those of performance), if any, and will be free from defects in material and workmanship.

CAUTION: Defective and nonconforming items must be held for GE's inspection and returned to the original F.O.B point upon request.

Incorrect Selection or Misapplication of Products - GE cannot be responsible for customer's incorrect selection or misapplication of our products.

Unauthorized Repair Work - GE has not authorized any non-GE affiliated repair companies, contractors or individuals to perform warranty repair service on new products or field repaired products of its manufacture. Therefore customers contracting such repair services from unauthorized sources must do at their own risk.

Unauthorized Removal of Seals - All new valves and valves repaired in the field by GE's Field Service personnel are sealed to assure the customer of our guarantee against defective workmanship. Unauthorized removal and/or breakage of this seal will negate our warranty.

[1] Refer to GE's Standard Terms of Sale for complete details on warranty and limitation of remedy and liability.

© 2015 General Electric Company. All rights reserved.

V. Valve Terminology (Paraphrased from ASME's PTC 25.3)

Back Pressure
Back pressure is the static pressure existing at the outlet of a safety valve device due to pressure in the discharge system.

Blowdown
Blowdown is the difference between actual popping pressure of a safety valve and actual reseating pressure expressed as a percentage of set pressure, or in pressure units.

Bore Area
Bore area is the minimum cross-sectional area of the nozzle.

Bore Diameter
Bore diameter is the minimum diameter of the nozzle.

Chatter
Chatter is abnormal, rapid reciprocating motion of the moveable parts of a safety valve, in which the disc contacts the seat.

Closing Pressure
Closing pressure is the value of decreasing inlet static pressure at which the valve disc re-establishes contact with the seat, or at which lift becomes zero.

Disc
A disc is the pressure containing moveable member of a safety valve which affects closure.

Inlet Size
Inlet Pressure is the nominal pipe size of the inlet of a safety valve, unless otherwise designated.

Leak Test Pressure
Leak test pressure is the specified inlet static pressure at which a quantitative seat leakage test is performed in accordance with a standard procedure.

Lift
Lift is the actual travel of the disc away from closed position when a valve is relieving.

Lifting Device
A lifting device is a device for manually opening a safety valve, by the application of external force to lessen the spring loading which holds the valve closed.

Nozzle/Seat Bushing
A nozzle is the pressure containing element which constitutes the inlet flow passage and includes the fixed portion of the seat closure.

Outlet Size
Outlet size is the nominal pipe size of the outlet passage of a safety valve, unless otherwise designated.

Overpressure
Overpressure is a pressure increase over the set pressure of a safety valve, usually expressed as a percentage of set pressure.

Popping Pressure
Popping pressure is the value of increasing inlet static pressure at which the disc moves in the opening direction at a faster rate as compared with corresponding movement at higher or lower pressures. It applies only to safety or safety relief valves on compressible fluid service.

Pressure Containing Member
A pressure containing member of a safety valve is a part which is in actual contact with the pressure media in the protected vessel.

Pressure Retaining Member
A pressure retaining member of a safety valve is a part which is stressed due to its function in holding one or more pressure containing members in position.

Rated Lift
Rated lift is the design lift at which a valve attains its rated relieving capacity.

Safety Valve
A safely valve is a pressure relief valve actuated by inlet static pressure and characterized by rapid opening or pop action opening or pop action.

Set Pressure
Set pressure is the value of increasing inlet static pressure at which a safety valve displays the operational characteristics as defined under "Popping Pressure." It is one value of pressure stamped on the safety valve.

Seat
A seat is the pressure containing contact between the fixed and moving portions of the pressure containing elements of a valve.

Seat Diameter
Seat diameter is the smallest diameter of contact between the fixed and moving members of the pressure containing elements of a valve.

© 2015 General Electric Company. All rights reserved.

Seat Tightness Pressure
Seat tightness pressure is the specific inlet static pressure at which a quantitative seat leakage test is performed in accordance with a standard procedure.

Simmer
Simmer is the audible or visible escape of fluid between the seat and disc at an inlet static pressure below the popping pressure and at no measurable capacity. It applies to safety valves on compressible fluid service.

Warn
See "Simmer" (definition above).

VI. Handling and Storage

Safety valves should be stored in a dry environment and protected from the weather. They should not be removed from the skids or crates until immediately prior to installation. Flange protectors and sealing plugs should remain installed until just prior to installation.

Safety relief valves, either crated or uncrated, should never be subjected to sharp impact. This would be most likely to occur by bumping or dropping during loading or unloading from a truck or while moving with a power conveyor, such as a fork lift truck. The valve, either crated or uncrated, should always be kept with the inlet down (i.e., never laid on its side), to prevent misalignment and damage to internal components. Even crated valves should always be lifted with the inlet down.

Uncrated valves should be moved or hoisted by wrapping a chain or sling around the discharge neck, then around the upper yoke structure, in such manner as will ensure the valve is in a vertical position during lift. Never lift the full weight of the valve by the pilot assembly, tubing, lifting lever or other external device.

Never hook to the spring to lift. When safety valves are uncrated and the flange protectors removed, immediately prior to installation, meticulous care should be exercised to prevent dirt from entering the outlet port while bolting in place. While hoisting to the installation, care should be exercised to prevent bumping the valve against steel structures and other objects.

© 2015 General Electric Company. All rights reserved.

VII. Design Features and Nomenclature

Blowdown
The Consolidated Maxiflow Safety Valve is the valve with 3% attainable blowdown certified by the National Board of Boiler and Pressure Vessel Inspectors. Adjusting rings are preset at the factory to give slightly longer blowdown. If a verified value of 3% blowdown is required, this can be obtained by actuating the valve on the installation where sufficient capacity is available, and where system operating parameters will permit such blowdown.

Body and Neck Materials
All pressure retaining parts, with the exception of reheat valves rated to 900 psig (62.05 barg) and lower, are made of forged materials. Forged welded inlet neck valves have the three-piece weld construction. Flanged inlet valves and cast neck welded inlet valves have a top-inserted seal-welded bushing.

Design Life
For most service conditions, pressure retaining parts subject to mechanical stresses, such as valve necks, yoke rods, etc, are designed for a design life equivalent to the boiler, and are well in excess of the requirements of the Power Boiler Code.

Operating Gap
The operating gap is defined as the difference between the operating pressure and the valve set pressure. Consolidated Safety Valves are tested and proven tight for operating gaps of 6%. Although tightness is a function of design, it should be realized that with smaller operating gaps it is also necessary to increase maintenance. Increase in incidents of valve lift, simmer, etc can be expected with a small operating gap, because there is less allowance for system pressure transients and other unidentified variables

Supercritical Valves
Maxiflow Supercritical Valves are used for steam at pressures above approximately 3200 psig (220.63 barg). Its internal design is similar to that used in subcritical boiler safety valves. The springs for supercritical valves are made from alloy steel, the discs from Inconel "X" and the seating surface of the bushing from Stellite. These materials have been found to work very well under the high temperatures and pressures to which the valves are subjected. A ball thrust bearing is used on the compression screw in all of the valves for better adjustment.

Thermal Compensation
The yoke rod design, together with proper selection of yoke rod and spindle materials, renders the valve relatively free from changes in pressure settings due to inlet temperature variations. High ambient temperatures adjacent to the valve spring and yoke rods may cause set pressure variations, and need to be considered when adjusting the valve. Temperature stabilization is always necessary prior to adjusting a valve for set pressure

Thermoflex* disc
The Thermoflex disc design, by allowing for the rapid equalization of temperature around the valve seat, provides a degree of tightness far above that offered by competitive valves. Selection of materials provides desired "Thermal Flexibility" and "Mechanical Flexibility". ThermoflexTM discs are now giving excellent results at 5500 psig (379.21 barg) and 1150°F (621°C).

© 2015 General Electric Company. All rights reserved.

VIII. Introduction

The "safety valve" is the final safeguard between a controlled boiler and a catastrophic explosion. In an overpressure situation, the pressure in the valve inlet increases until the force on the disc exerted by the system pressure equals the force exerted by the spring. This causes the safety valve to pop, or lift, relieving the excess steam until the system pressure is reduced to the desired level.

The Type 1700 Maxiflow Safety Valve represents the state of the art in pressure relief products. As well as its back pressure assisted closing feature, the Maxiflow Safety Valve incorporates a pressure assisted/temperature stabilizing Thermoflex disc for improved seat tightness. This design has been proven in hundreds of installations world wide.

The Type 1700 Maxiflow Safety Valve is sold with a flanged outlet and either a flanged or buttwelded inlet. Other variations include a thrust bearing assisted compression screw for high pressure valves, a spring cover and a lifting gear cover for outdoor installations. All export and weld inlet valves are shipped with a hydro plug for protecting the internal parts of the valve and to provide a means for the end user to hydrostatically test the system without damaging the disc or nozzle seats. The information contained in this manual provides the customer with basic concepts required in maintenance of the Maxiflow Safety Valve, but in no way is it intended to take the place of experience and technical knowledge required to perform adequate valve repair work and maintenance.

© 2015 General Electric Company. All rights reserved.

IX. Consolidated 1700 Series Safety Valve

A. Maxiflow Safety Valve – Flanged Inlet [1500 psig (103.4 barg) Class]

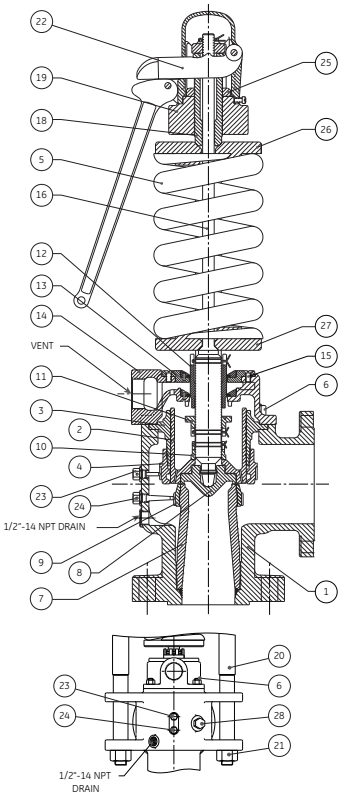

Figure 1: 1700 Maxiflow Safety Valve – Flanged Inlet

Part No.	Nomenclature
1	Base
2	Disc Holder
3	Guide
4	Upper Adjusting Ring
5	Spring
6	Coverplate Stud
7	Seat Bushing
8	Disc
9	Lower Adjusting Ring
10	Disc Collar
11	Lift Stop
12	Overlap Collar
13	Coverplate Assembly
13a	Coverplate
13b	Floating Washer
13c	Washer Retainer
13d	Drive Screws
13e	Coverplate Nut
14	Top Plate Assembly
14a	Top Plate
14b	Washer Retainer
14c	Floating Washer
14d	Drive Screws
15	Top Plate Screws
16	Spindle
17	Spindle Button[1]
18	Compression Screw
19	Yoke
20	Yoke Rod
21	Yoke Rod Nut
22	Lifting Gear
23	Upper Adjusting Ring Pin
24	Lower Adjusting Ring Pin
25	Compression Screw Locknut
26	Upper Spring Washer
27	Lower Spring Washer
28	Service Plug
29	Thrust Bearing[2]
30	Compression Screw Adaptor[3]
31	Thrust Bearing Cover[4]

Notes:
1. For 1719 valve only.
2. For 1786-HP, 1706RR-HP, 1719, 1729, 1769 valves only
3. For 1786-HP, 1706RR-HP, 1729, 1769 valves only
4. For 1769 valve only

© 2015 General Electric Company. All rights reserved.

IX. Consolidated 1700 Series Safety Valve (Contd.)

B. Maxiflow Safety Valve – Welded Inlet (600 psig (41.37 barg) Class)

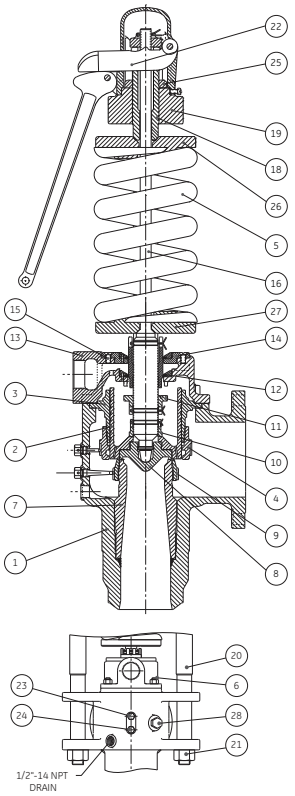

Figure 2: 1700 Maxiflow Safety Valve – Welded Inlet

Part No.	Nomenclature
1	Base
1a	Inlet Neck
2	Disc Holder
3	Guide
4	Upper Adjusting Ring
5	Spring
6	Coverplate Stud
7	Seat Bushing
8	Disc
9	Lower Adjusting Ring
10	Disc Collar
11	Lift Stop
12	Overlap Collar
13	Coverplate Assembly
13a	Coverplate
13b	Floating Washer
13c	Washer Retainer
13d	Drive Screws
13e	Coverplate Nut
14	Top Plate Assembly
14a	Top Plate
14b	Washer Retainer
14c	Floating Washer
14d	Drive Screws
15	Top Plate Screws
16	Spindle
17	Spindle Button[1]
18	Compression Screw
19	Yoke
20	Yoke Rod
21	Yoke Rod Nut
22	Lifting Gear
23	Upper Adjusting Ring Pin
24	Lower Adjusting Ring Pin
25	Compression Screw Locknut
26	Upper Spring Washer
27	Lower Spring Washer
28	Service Plug
29	Thrust Bearing[2]
30	Compression Screw Adaptor[3]
31	Thrust Bearing Cover[4]
32	Comp. Scr. Locknut Set Screw[5]

Notes:
1. For 1719, 1710, 1760 valves only
2. For 1786-HP, 1706R-HP, 1706RR-HP, 1787, 1707R, 1707RR, 1719, 1729, 1710, 1720, 17_3 valves only
3. For 1786-HP, 1706R-HP, 1706RR-HP, 1787, 1707R, 1707RR, 1729, 1710, 1720, 17_3 Valves only
4. For 17_3 valves only
5. Standard for 17_0W and 17_3W valves only; valves 17_7W and 17_9W for set pressures **greater than** 2500 psig (172.37 barg) only

© 2015 General Electric Company. All rights reserved.

IX. Consolidated 1700 Series Safety Valve (Contd.)

C. Valve Options

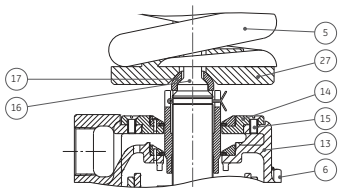

Figure 3: Spindle Button

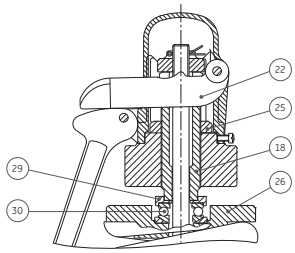

Figure 4: Thrust Bearing

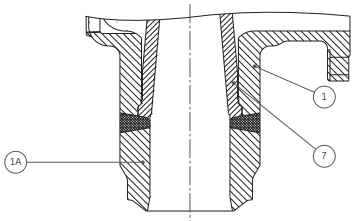

Figure 5: Inlet Neck

Part No.	Nomenclature
1	Base
1a	Inlet Neck
5	Spring
6	Coverplate Stud
7	Seat Bushing
13	Coverplate Assembly
13a	Coverplate
13b	Floating Washer
13c	Washer Retainer
13d	Drive Screws
13e	Coverplate Nut
14	Top Plate Assembly
14a	Top Plate
14b	Washer Retainer
14c	Floating Washer
14d	Drive Screws
15	Top Plate Screws
16	Spindle
17	Spindle Button[1]
18	Compression Screw
22	Lifting Gear
25	Compression Screw Locknut
26	Upper Spring Washer
27	Lower Spring Washer
29	Thrust Bearing[2]
30	Compression Screw Adaptor[3]

Notes:
1. For 1719, 1710, 1760 valves only
2. For 1786-HP, 1706R-HP, 1706RR-HP, 1787, 1707R, 1707RR, 1719, 1729, 1710, 1720, 17_3 valves only
3. For 1786-HP, 1706R-HP, 1706RR-HP, 1787, 1707R, 1707RR, 1729, 1710, 1720, 17_3 valves only

© 2015 General Electric Company. All rights reserved.

X. Operating Principles

The 1700-S series Maxiflow valve operates during closing on a back pressure principle, that is, the force of trapped steam on the upper side of the disc holder is utilized to assist the spring in forcing the disc back down onto its seat.

In Figure 6, 100% lift is attained by proper location of the upper and lower adjusting rings (G) and (O), respectively. When full lift is attained, as in Figure 7, lift stop (M) rests against coverplate (P) to eliminate hunting, thus adding stability to the valve. When the valve discharges in an open position, steam is bled into chamber (H) through two bleed holes (J) in the roof of the disc holder. Similarly, the spindle overlap collar (K) rises to a fixed position above the floating washer (L). The area between the floating washer and the spindle is thereby increased by the difference in the two diameters on the overlap collar. Under this condition, steam in chamber (H) enters into chamber (Q) through the secondary area formed by the floating washer (L) and the overlap collar (K) on the spindle, then through orifice (N), and escapes to atmosphere through the pipe discharge connection (R).

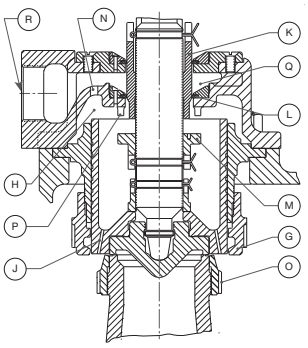

Figure 6: 100% Lift

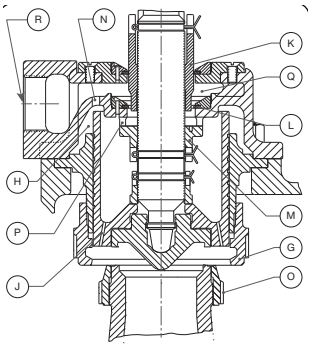

Figure 7: Full Lift

When closing, as in Figure 8, the spindle overlap collar (K) is adjusted so that it moves down into the floating washer (L), thereby effectively reducing the escape of steam from chamber (H).

The resulting momentary pressure building-up in chamber (H), at a rate controlled by orifice (N), produces a downward thrust in the direction of spring loading. The combined thrust of the pressure and spring loading results in positive and precise closing. Cushioning of the closing is controlled by the lower adjusting ring (O).

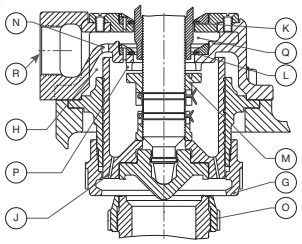

Figure 8: Closing

© 2015 General Electric Company. All rights reserved.

XI. Recommended Installation Practices

A. General Requirements

1. The valve should be installed to meet all the requirements of Figure 9 and Table 1.
2. The safety valve shall be connected to the header independent of any other connection, and attached as close as possible to the header, without any unnecessary intervening pipe or fitting. "Necessary" intervening pipe or fitting shall not be longer than the face-to-face dimension of the corresponding tee fitting of the same diameter and pressure, per ANSI Standards.
3. No valve of any description should be placed between the safety valve and the header, nor on the discharge pipe between the safety valve and the atmosphere.
4. In no case may the inlet piping to the valve have a flow area less than the area of the valve inlet.
5. Excessive pressure loss at the inlet of the safety valve will cause extremely rapid opening and closing of the valve, which is known as "chattering". Chattering will result in lowered capacity as well as damage to the seating surface of the valve. Severe chattering can cause damage to other parts of the valve.

Table 1: Maximum L Dimension

Inlet Size		Outlet Class	L max.	
in.	mm		in.	mm
3.00	76.2	150 #	7.250	184.15
4.00	101.6	300 #	9.375	238.13
6.00	152.4	150 #	12.500	317.50
6.00	152.4	300 #	12.875	327.03
8.00	203.2	150 #	16.000	406.40
8.00	203.2	300 #	16.375	415.93
10.00	254.0	150 #	19.000	482.60

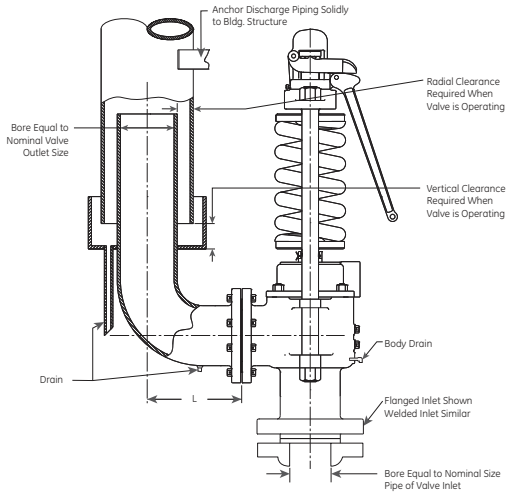

Figure 9: Recommended Installation for Discharge and Vent Piping

© 2015 General Electric Company. All rights reserved.

The following recommendations will assist in eliminating the factors that produce chatter:

a. Header nozzle corners must be rounded to a radius of not less than 1/4 of the opening diameter.

b. Pressure drop due to friction flow to the inlet of the valve should not be greater than 50 percent of the expected blowdown of the safety valve.

6. To decrease the effects of a phenomenon known as "sonic vibrations," the following recommendations are made:

a. Safety valves should be installed at least eight to ten pipe diameters downstream from any bend in a steam line. This distance should be increased when the valve is installed on the horizontal section of a header which is preceded by an upward section.

b. Safety valves should not be installed closer than eight to ten pipe diameters either upstream or downstream from a diverging, or a converging, "Y".

c. In cases where a piping configuration renders the above two recommendations impractical, or impossible, the downstream corner of the header nozzle inlet should be rounded to a greater extent than the upstream corner. The header nozzle entrance should be rounded so the radius at the downstream corner will be equal to a minimum of 1/4 of the nozzle diameter. The radius should be reduced gradually, leaving only a small portion of the upstream corner with a smaller radius.

d. Safety valves should never be installed, in a steam line, in a position directly opposite to a branch line.

7. Excessive line vibrations are known to produce shifts in safety valve set pressures. Vibrations may possibly introduce chatter, causing damage to the valve, and reduce its capacity. This vibration also contributes to increased incidents of seat leakage. Considerations should be given to eliminating this problem prior to installing the valve on the unit.

8. Steam flowing vertically out a discharge elbow produces a downward reaction on the elbow. Bending stress in the valve is determined by the product of this reactive force and the moment arm between the point of steam exhaust and the section being analyzed for bending stress. The effects of reaction force, vibration, and seismic loads, on all valve components and discharge piping, should be considered when designing the valve system.

9. For optimum performance, safety valves must be serviced regularly and otherwise maintained. So that servicing can be properly performed, valves should be located in a manner that allows for easy access. Sufficient working space should be provided around and above the valve to permit access to adjusting rings. If two or more valves are located close together, the outlets should be parallel so as to offer as much protection as possible to personnel repairing, or working close to, the safety valve.

10. Because foreign material passing into, and through, a safety valve is damaging, the system on which the valve is tested and finally installed must also be inspected and cleaned. New systems are prone to contain welding beads, pipe scale and other foreign materials which are inadvertently trapped during construction, and destroy the valve seating surfaces the first few times the valve opens. Therefore, the system should be thoroughly purged before the safety valve is installed.

11. With regard to weld-end inlet valves, completely assembled valves may be installed without disassembly being necessary at the time of welding. During welding, the valve neck should be insulated to reduce thermal stresses. When stress relieving, insulation should also be utilized to reduce thermal stresses. In service, the valve neck should be insulated at least to the point of the inlet neck/valve body-bowl juncture.

12. Safety valves should be installed in a vertical position. Nominal tolerance on vertical installation is plus or minus 1 degree.

13. The discharge area of the outlet piping from a safety valve should not be less than the area of the outlet connection. Where more than one safety valve is connected to a common outlet pipe, the area of the pipe should not be less than the combined area of the outlet connections to the safety valves.

14. All safety valve discharges should be piped so that the effluent is discharged clear from running boards or platforms. Ample provision for gravity drain should be made in the discharge pipe at, or near, each safety valve where water, or condensation, may collect. Each valve has an open

© 2015 General Electric Company. All rights reserved.

gravity drain through the body, below the level of the valve seat, and this drain should be piped to a safe discharge area.

15. If a silencer is used on a safety valve, it should have sufficient outlet area to prevent back pressure from interfering with the proper operation and discharge capacity of the valve. The silencer or other piping components should be constructed so as to avoid the possibility of creating corrosion deposit restrictions in the steam passages.

16. Exhausts, drains, and vents must be installed so that they will not impose undue stresses on the safety valve. Any such stresses can produce body distortion and leakage. Therefore, the following recommendations are provided:

a. Discharge piping should not be supported by the valve. The maximum weight on the outlet of the valve should not exceed the weight of a short radius elbow and flange, plus a 12" (304.8 mm) straight length of standard weight thickness pipe (with drip pan).

b. Clearance between the valve exhaust piping and the discharge stack should be sufficient to prevent contact when considering thermal expansion of the header, valve, and discharge stack. Movements due to vibration, temperature changes, and valve reaction forces should also be considered, to insure adequate clearance between the exhaust piping and the discharge stack.

c. Flexible metal hoses are not generally recommended, but if used to connect valve outlets to discharge stacks, they must be of sufficient length, and be configured/installed in such a manner, that they will not become "solid" in anyone position. Better results are obtained if the hoses are installed so that they will permit movement by bending, rather than by stretching and compressing along their length.

17. When lifting a valve, the valve should always remain in a vertical position. The valve may be lifted by using a sling around the valve yoke and the valve outlet neck. In no case should the valve be lifted by the lifting lever.

The valve should not be bumped or dropped during installation. If the valve is dropped, an inspection for damage should be made, and the set pressure of the valve rechecked.

18. At the time of installation, all protective covers on the valve should be removed. The internal of the valve are to be checked for cleanliness. No foreign matter is permitted in the valve inlet or outlet, since it may possibly damage the valve components, or be dropped into the header.

All face surfaces which require gaskets, to seal pressure, shall be inspected for cleanliness, or any defects that can cause leakage. Burrs, mashed serrations, uneven surfaces, etc., are all possible leakage-producing defects. Proper gasket sizes and pressure ratings should be checked prior to starting valve installation.

19. It is of utmost important that the gaskets used be dimensionally correct for the specific flange, and that they fully clear the valve inlet and outlet openings. Gaskets, flange facings, and bolting should meet the service requirements for the pressure and temperature involved. Other valve installation considerations include:

a. Install the inlet gasket, if required, on the header mounting flange. Check for cleanliness, surface alignment condition, gasket condition, etc. When possible, inlet studs on the mounting flange should be used to guide the valve on the header mounting flange. Inlet studs should be lubricated with the appropriate lubricant.

b. When installing flanged valves, the flange bolts must be pulled down evenly to prevent body distortion, misalignment, and leakage.

c. With valve in position, screw on the stud nuts until all nuts are finger tight. An initial torque shall be placed, in turn, on each stud nut. Increase the torque progressively until the final torque is applied. Upon completion, recheck each stud nut's torque. Required torque will vary with bolting material and gaskets used. See your company engineering or specification department for details.

As an extra precaution, the gap between the two mating flanges should be checked during the torquing process to ensure that the flanges are being pulled together evenly. Calipers may be used for this verification. A final inspection and review should be made to insure that all of the requirements for bolting the valve inlet have been implemented.

© 2015 General Electric Company. All rights reserved.

d. In like manner, the outlet piping may now be installed.

A complete inspection of components and their cleanliness is to be made prior to further work. Studs are to be lubricated with an appropriate lubricant.

e. Install the outlet gasket, studs and nuts. Stud nuts are to be pulled down finger tight. An initial value of torque is to be applied. The additional procedures outlined, in Step 19c, are also to be followed.

20. After being assured that the valve is properly installed, the drainage piping from the valve body-bowl is to be connected. This line also must be flexible, so it will not create loads on the valve under operating conditions.

21. Prior to completing the installation, a visual check should be made to ensure that the valve lifting lever is free to operate.

22. At the time of installation, an inspection of the valve should be made to confirm that all adjustment components (i.e., ring pins, cap, etc.) are properly locked and sealed, as required by the ASME Code.

23. Flanged valves may be installed without insulation.

24. For operational hydrostatic tests at the valve inlet, which do not exceed valve set pressure (1.0 x design pressure), the valve may be gagged. Refer to the "Field Testing" portion of this manual (i.e., Section XIII.A) for proper techniques. Ensure that the gag is removed upon completion of the inlet hydrostatic test.

25. Prior to startup of the unit on steam, the sections of this manual which specify requirements for set pressure testing should be reviewed. For conditions where the valve is subjected to high steam pressures (i.e., those exceeding normal operating conditions), preparations should be made to gag the valves. These preparations should then be cleared with the boiler manufacturer and GE. Refer to Section XVI.A of this manual for the proper gagging techniques.

26. The safety valve should be tested with full steam pressure to ensure that the safety valve installation has been properly accomplished. In some cases this is not practical, thus the use of Consolidated Hydroset device or Electronic Valve Tester (EVT*) unit should be considered. For valves being tested for set pressure by using a Hydroset device or EVT unit only, the set pressure is being verified. Other factors such as blowdown, lift, reaction force, proper discharge stack sizes and effects of thermal expansion cannot be determined.

27. Vent and drain piping should have a union connection to facilitate valve removal.

B. Outdoor Safety Valve Installation

Safety valves operating under the best possible conditions (i.e., of favorable operating gap, relatively stable ambient temperatures, the absence of dirt and in relatively still air) will provide the maximum degree of safety, tightness and dependability.

When a safety valve is installed in an outdoor location, it may be exposed to wind, rain, snow, ice, dirt and varying temperatures. Therefore, the following recommendations are made for proper protection, and to ensure that operational dependability can be restored to a level near that of the valve installed under ideal conditions:

1. The inlet neck of the safety valve and safety valve body, up to the bottom of the coverplate, should be insulated. In some cases, it may be sufficient to insulate the inlet neck of the safety valve and bottom of the base only (CAUTION: Do not insulate the safety valve spring). The exterior surface of any such insulation should be made weather-proof by any suitable means. In addition to maintaining a more even temperature within the valve body, especially during widely fluctuating ambient temperatures, this insulation will effectively reduce thermal stresses, due to high temperature gradients, through the walls of the safety valve nozzle.

2. Spring covers should be used to stabilize (as nearly as possible) the temperature of the spring, to prevent the accumulation of snow and ice between the coils of the spring, and to prevent dirt and fly ash from accumulating between the coils of the spring.

3. Lifting gear covers should be installed to prevent ice, dirt and fly ash from accumulating in areas inside the safety valve cap.

© 2015 General Electric Company. All rights reserved.

C. Indoor Safety Valve Installation

Indoor valve installations should have inlet necks insulated only up to the underside of the valve body. Considerations should be given to ambient temperatures greater than 100°F (37°C), because of possible set point changes which may occur due to these higher ambient temperature.

D. Coverplate Vent Piping

The coverplate can be vented to atmosphere as shown in Figure 10. Precautions should be taken to vent the coverplate in such a manner that it will exhaust into a safe area to prevent injury to personnel near the valve. The coverplate vent drain must not be connected to the body drain piping.

Do not plug the coverplate vent hole or reduce vent hole pipe size, as this will lead to valve malfunction and damage.

Precautions should be taken to prevent accumulations of foreign material or water in vent pipe. This vent is a critical part of the valve system for controlling valve blowdown and lift.

Note: Appropriate considerations should be made for draining any condensate which may accumulate in the coverplate vent piping.

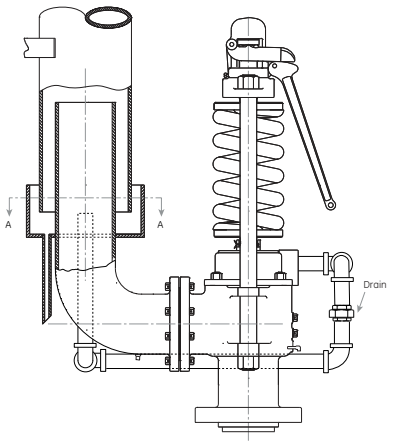

Figure 10: Recommended Installation

© 2015 General Electric Company. All rights reserved.

XII. Disassembly of 1700 Series Safety Valve

A. General Information

The 1700 Series Maxiflow Safety Valve can be easily disassembled for inspection, reconditioning seats, or replacing internal parts. The initial spring load can be established after reassembly (Refer to Figures 1 to 5 for parts nomenclature).

Note: Before starting to disassemble the valve, be sure that there is no steam pressure in the drum or header.

Parts from one valve should not be interchanged with parts from another valve.

Note for valves used in ATEX conditions:
A maintenance schedule for spring replacement every second outage, not to exceed four (4) years is required.

B. Specific Steps

1. Remove the top lever pin and top lever.
2. Loosen cap set screw and lift off cap and drop lever assembly.
3. Remove the cotter pin which retains the release nut, and then remove the release nut.
4 Refer to Figure 11, and measure and record Dimension A, as this information will be required to correctly re-assemble the valve.
5. Remove the two top yoke rod nuts evenly, so as to prevent binding of the yoke.
6. Carefully lift the yoke over the spindle, and away from the valve. Remove the thrust bearing assembly (if applicable) and the top spring washer.
7. Ensure that the bottom spring washer is not stuck to the spring If the bottom spring washer is stuck to the spring it may accidentally jar loose and fall. Next, mark the top of the spring, in order to correctly install the spring during re-assembly. Finally, lift the spring over the spindle and away from the valve, and then remove the bottom spring washer.
8. Remove the overlap collar cotter pin from the collar and spindle assembly. Note which overlap collar notch is opposite the cotter pin hole in the spindle (See Figure 12). Carefully counting each collar notch that passes in front of the cotter pin hole in the spindle, begin rotating the collar counterclockwise until the bottom line (of the four lines) on the collar is even with the upper floating washer. Record the number of overlap collar notches that passed in front of the cotter pin hole in the spindle, as this information will be required to correctly re-assemble the valve.
9. Mark the coverplate vent to establish its relationship to the valve base, as this will ensure correct alignment during re-assembly. Then, remove the coverplate stud nuts and lift the coverplate over the studs.
10. Remove the spindle, disc and disc holder assembly from the valve by lifting the spindle. Take care to ensure that the disc seating surface is not damaged when the assembly is placed on the ground or some other work surface.

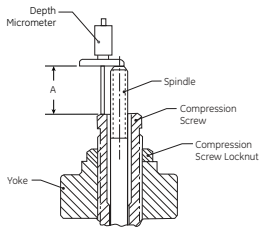

Figure 11: Yoke-Spindle Assembly

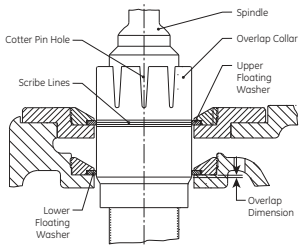

Figure 12: Collar and Spindle Assembly

© 2015 General Electric Company. All rights reserved.

XII. Disassembly of 1700 Series Safety Valve (Contd.)

11. To remove the disc and disc holder from the spindle, first insert the spindle into a vise (see Figure 13) being careful not to damage the threaded end of the spindle. Then, lift up on the disc holder and turn the disc/disc holder counterclockwise to engage the "drop-thru" threads. Once the threads are engaged, release the disc holder and continue to unthread and remove the disc. After the disc is removed, lift the disc holder from the spindle.

Note: Removal of the overlap collar, the lift stop and/or the disc collar from the spindle is usually unnecessary, unless the spindle is to be replaced.

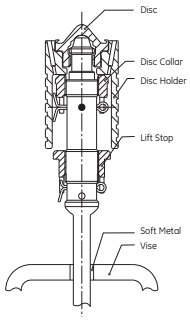

Figure 13: Spindle Vise

12. Measure from the top of the guide to the bushing seat (Dimension B, Figure 14) with a depth micrometer or other suitable measuring device. **Record Dimension B.** Place a scale or other thin flat metal surface against the lower face of the upper adjusting ring and measure from the top of the guide to the face of the upper adjusting ring (Dimension C, Figure 14). **Record Dimension C.**
13. Remove the upper adjusting ring pin from the valve base. Remove the upper adjusting ring and guide assembly from the base by lifting straight up on the guide being careful not to disturb the upper adjusting ring adjustment. **Mark the radial position of the upper ring notches** relative to the guide by marking or scribing axially on the guide, then making a corresponding mark axially on the upper adjusting ring (see Figure 15). Recording Dimensions B and C and marking of the upper adjusting ring and guide will aid in setting the adjusting ring in exactly the same position it was in prior to disassembly.

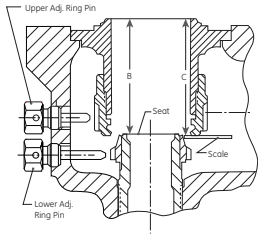

Figure 14: Guide - Bushing Seat Assembly

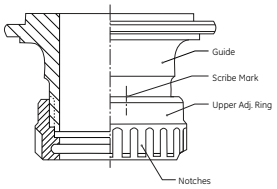

Figure 15: Upper Adjusting Ring and Guide Assembly

14. Loosen the lower adjusting pin until the pin is slightly clear of the notches in the lower adjusting ring. Being careful not to move the lower adjusting ring, place a ring lap on top the busing seat. (See Figure 16). Then, using the ring pin as a "pointer", or reference point, rotate the lower adjusting ring counterclockwise and count the number of notches that pass in front of the "pointer" until contact is made with the ring lap. Record this information, as it will be required to correctly re-assemble the valve.

© 2015 General Electric Company. All rights reserved.

XII. Disassembly of 1700 Series Safety Valve (Contd.)

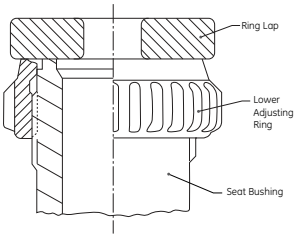

Figure 16: Bushing Seat Assembly

15. Next, remove both the lower adjusting ring pin and the lower adjusting ring from the valve base.
16. Normally the yoke rods do not have to be removed from the valve base. If however, it becomes necessary to remove them, the procedure below should be followed:
    a. Mark each rod relationship to where it contacts the valve base "ears", and also identifying which rod is to the right and which rod is to the left of the valve outlet.
    b. Loosen the yoke rod nuts using the appropriate size socket and handle.
    c. Remove the nuts, and then pull up on each rod to remove it from the base.
17. The valve is now ready to be cleaned and the parts inspected for proper size and condition.

© 2015 General Electric Company. All rights reserved.

XIII. Maintenance Instructions

A. General

It is not necessary to remove 1700 Series Maxiflow Safety Valves from the boiler for maintenance. The normal maintenance required is generally confined to touching up seats and occasionally replacing the disc.

The following tools are recommended for this work:

1. Flat lapping plate (Part No. 0439004).
2. Grinding compounds.
3. High temperature lubricant (Fel - Pro Nickel Ease).
4. Two (2) ring laps per valve size and type.

See Maintenance Tools and Supplies (Section XIX of this manual).

All of the above tools can be procured from GE, with prices being those that are in effect at the time of delivery. It may not be necessary to use all of the ring laps at any one time, but having a sufficient supply on hand will save the time of reconditioning them during a boiler outage. After the boiler is back on the line, the ring laps should be reconditioned on the flat lapping plate, or returned to the factory for reconditioning, at a nominal cost, on a special lapping machine. A lap should not be used on more than one valve without being reconditioned.

Valves that have been leaking should be disassembled in accordance with prior instructions. Since the position of the adjusting rings has been recorded, the rings can be removed for cleaning every time the valve is disassembled. Parts for each valve should be kept together or marked, to ensure that they are replaced in the same valve.

Reconditioning of the seat surface of the disc and seat bushing is accomplished by lapping with a flat cast iron, ring lap, as outlined in the lapping procedure. (See Section XIII.B.)

B. Lapping Procedure

1. General Information

While the finer points of lapping and "grinding-in" may be considered as a mechanical art, it is not beyond the ability of the average mechanic to produce good seats with some practice. No effort has been made in this manual to establish an exact procedure to cover each and every case, because different persons can get the same results using their own techniques.

The following precautions and hints will be of assistance when lapping nozzle and/or disc seats:

a. Two (2) ring laps per valve.
b. 1A Clover Grinding Compound per tool list. [1]
c. 1000 Grit Kwik-Ak-Shun Grinding Compound per tool list. [1]
d. Clean, lint free cotton rags.

[1] This tool list is located in Section XIX.A of this manual.

Before lapping the nozzle and disc seat, the leading edges (inside diameter of seats) of both must be slightly chamfered as follows:

Use a fine grade sandpaper to lightly break the inner edge and outer edge of the nozzle seat and disc seat. The purpose of this is to remove any small metal particles or fins attached to the sharp corner surfaces. Do not exceed .002" (0.05 mm) chamfer for this purpose.

2. To Lap The Bushing Seat

Note: If the bushing seat surface requires extensive lapping or reconditioning, a reseating machine should be used prior to lapping. (See "Reseating Machine," in Section XIII.C of this manual.)

Cover the seat lap face with a light coating of 1A Clover Compound and gently place the lap on the valve bushing seat.

Note: A heavy coat of lapping compound tends to round off the edges of the seat.

Lap using an oscillating motion in various directions, while holding the lap loosely in the fingers and allowing the weight of the lap to rest on the seat surface. Control the motion of the lap to prevent either the inside or outside edge of the lap from crossing the bushing seat surface. If either edge touches the seat surface, the seat can become scratched and/or rounded.

© 2015 General Electric Company. All rights reserved.

XIII. Maintenance Instructions (Contd.)

Note: Care should be used not to run off the seating surface with the lap, as this will cause the seat to become uneven.

Do not lap excessively with a ring lap without resurfacing on a lapping plate as shown in Figure 17. Use a new ring lap, if further lapping is required, to remove any defect in the seat. To finish lapping the bushing seat, apply a light coating of #1000 Grit Compound to the face of the new lap, and repeat the above lapping motion.

Remove the ring lap and wipe the lap surface with a clean, lint free cloth, leaving compound on the bushing seat. Replace the ring lap on the seat and lap as above, but without adding compound. Repeat this operation until the seat has a mirror finish. Any evidence of defects, such as gray areas or scratches, will require a repeat of the whole lapping procedure until a mirror finish is attained.

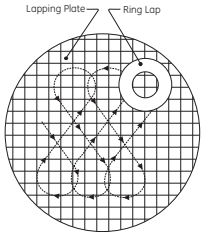

Figure 17: Ring Lap

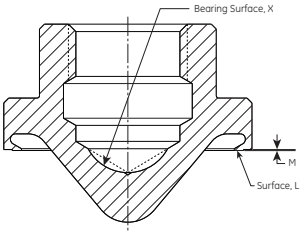

Figure 18: Thermoflex Disc

3. To Lap Disc Seat

The above lapping method is also used on the disc seat. When lapping the disc seat, the disc should be held stationery, but not rigidly, and the lap moved as above. Use care not to strike the cone of the disc, as this would cause the seat to be high on the inside.

The Thermoflex disc cannot be machined. If, after lapping, Dimension M, in Figure 18, does not meet the minimum specified in Table 2, the disc should be replaced.

It may not be necessary to use all the laps at any one time, but having a sufficient supply on hand will save reconditioning time. The laps should be reconditioned on the flat lapping plate, and a lap should not be used on more than one valve without being reconditioned. Laps must be checked for flatness prior to use, and at frequent intervals during use. A lap that is flat within one-half light band is considered satisfactory. Information on the Monochromatic Light and optical flat is available, upon request, from GE's Field Service department.

To recondition a ring lap, wipe all compound from the lapping plate and ring lap, then move the ring lap in a figure-eight motion on a lapping plate. If the lap is not flat, a shadow will be apparent. To remove the shadow, coat the lapping plate with 1000 Grit. Compound and lap the ring, with figure-eight motions covering the lapping plate, as shown in Figure 17.

Table 2: Minimum Seat Relief

Orifice	M min.	
	in.	mm
1	.004	0.10
2	.005	0.13
3	.006	0.15
5	.007	0.18
4	.008	0.20
6	.010	0.25
7_Q	.012	0.30
8	.012	0.30
R	.012	0.30
RR	.012	0.30

© 2015 General Electric Company. All rights reserved.

XIII. Maintenance Instructions (Contd.)

C. Reseating Machine Information

GE's Consolidated reseating machines should be used to recondition badly worn, out of tolerance, bushing seats. This machine can be provided by GE's Service department, and eliminates the need to remove a valve from the unit. The machine is mounted in place of the yoke and cuts the top face, inside diameter, and outside of the bushing, to establish the correct height, angles, and diameters. Replace the seat bushing if critical dimensions D min. is exceeded. See Figures 19 & 20 and Table 4. Do not remove threads.

The use of the reseating machine is suggested for reconditioning badly worn seats, or for re-establishing critical dimensions (Figure 19). All the dimensions shown in Figure 19 should be re-established in accordance with the values in Table 3.

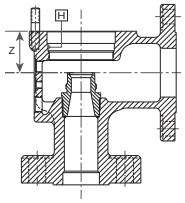

Figure 19: Base & Bush Assembly

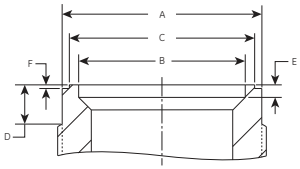

Figure 20: Seat Bushing Dimensions

Table 3: Seat Bushing Rework/Inspection Dimensions

Orifice	A + .002/- .003" (+0.05/-0.08 mm)		B max.		C ± .002" (±0.05 mm)		E ± .005" (±0.13 mm)		F ± .003" (±0.08 mm)	
	in.	mm	in.	mm	in.	mm	in.	mm	in.	mm
1	1.582	40.18	1.329	33.76	1.468	37.29	0.160	4.06	0.025	0.64
1[1]	1.582	40.18	1.289	32.74	1.508	38.30	0.160	4.06	0.035	0.89
2	1.910	48.51	1.595	40.51	1.773	45.03	0.120	3.05	0.035	0.89
3	2.536	64.41	2.125	53.98	2.347	59.51	0.154	3.91	0.035	0.89
5	2.904[2]	73.76[2]	2.433	61.80	2.685	68.20	0.175	4.45	0.035	0.89
4	3.163	80.34	2.655	67.44	2.928	74.37	0.189	4.80	0.035	0.89
6	4.208	106.88	3.540	89.92	3.900	99.06	0.247	6.27	0.055	1.40
Q	4.988	126.70	4.424	112.37	4.873	123.77	0.304	7.72	0.055	1.40
8	5.944	150.98	5.013	127.33	5.523	140.28	0.343	8.71	0.055	1.40
R	6.314	160.38	5.324	135.23	5.876	149.25	0.364	9.25	0.055	1.40
RR	6.314	160.38	5.324	135.23	5.876	149.25	0.364	9.25	0.055	1.40

[1] Valve 1719, 1710 Only.
[2] Tolerance: + .0 0 1 " (0 . 0 3 .mm)
- .002" (0.05 mm)

© 2015 General Electric Company. All rights reserved.

XIII. Maintenance Instructions (Contd.)

Table 4: Base/Seat Bushing Assembly Replacement Criteria

Orifice	Valve Type	D min.		K max.	
		in.	mm	in.	mm
1	1715	0.125	3.18	3.016	76.61
	1716	0.125	3.18	3.016	76.61
	1717	0.125	3.18	3.016	76.61
	1719	0.125	3.18	3.766	95.66
	1710	0.125	3.18	3.766	95.66
	1713	0.250	6.35	3.641	92.48
2	1725	0.203	5.16	3.750	95.25
	1726	0.203	5.16	3.750	95.25
	1727	0.203	5.16	3.750	95.25
	1729	0.203	5.16	3.750	95.25
	1720	0.203	5.16	3.750	95.25
	1723	0.312	7.92	5.516	140.11
3	1735	0.250	6.35	4.891	124.23
	1736	0.250	6.35	4.891	124.23
	1737	0.250	6.35	4.891	124.23
	1739	0.250	6.35	5.703	144.86
	1730	0.250	6.35	5.703	144.86
	1733	0.437	11.10	5.516	140.11
5	1755	0.313	7.95	5.765	146.43
	1756	0.313	7.95	5.765	146.43
	1757	0.313	7.95	5.765	146.43
	1759	0.313	7.95	5.765	146.43
	1750	0.313	7.95	5.765	146.43
	1753	0.535	13.59	5.543	140.79
4	1745	0.313	7.95	5.765	146.43
	1746	0.313	7.95	5.765	146.43
	1747	0.313	7.95	5.765	146.43
	1749	0.313	7.95	5.765	146.43
	1740	0.313	7.95	5.765	146.43
	1743	0.535	13.59	5.543	140.79
6	1765	0.313	7.95	4.953	125.81
	1766	0.313	7.95	4.953	125.81
	1767	0.500	12.70	4.766	121.06
	1769	0.500	12.70	6.766	171.86
	1760	0.500	12.70	6.766	171.86
Q (4")	1775Q	0.438	11.13	5.640	143.26
	1776Q	0.438	11.13	5.640	143.26
Q (6")	1775Q	0.438	11.13	5.640	143.26
	1776Q	0.438	11.13	5.640	143.26
	1777Q	0.438	11.13	5.640	143.26
8	1785	0.438	11.13	5.640	143.26
	1786	0.438	11.13	5.640	143.26
	1786-HP	0.438	11.13	7.640	194.06
	1787	0.438	11.13	7.640	194.06
R	1705R	0.438	11.13	5.640	143.26
	1706R	0.438	11.13	5.640	143.26
	1706R-HP	0.453	11.51	7.625	193.68
	1707R	0.453	11.51	7.625	193.68
RR	1705RR	0.438	11.13	5.640	143.26
	1706RR	0.438	11.13	5.640	143.26
	1706RR-HP	0.453	11.51	7.625	193.68
	1707RR	0.453	11.51	7.625	193.68

As a result of machining the bushing seat, the length of disc holder extending above the disc guide will decrease. Therefore, the top of the disc guide should be kept to a distance of at least .063" (1.59 mm), beneath the top of the disc holder, to facilitate freeing the disc holder, in case a deposit of dirt forms in the pocket between the two parts. This dimension is obtained by machining the top of the disc guide. (See Figure 21).

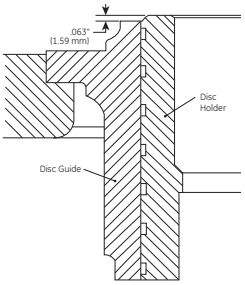

Figure 21: Guide - Disc Holder Assembly

© 2015 General Electric Company. All rights reserved.

XIII. Maintenance Instructions (Contd.)

D. Spindle Runout

It is important that the spindle be kept very straight in order to transmit the spring force to the disc without lateral binding. Overgagging is one of the common causes of bent spindles. A method to check the essential working surfaces of the spindle is illustrated in Figure 22. This may be performed either with or without the disc collar and lift stop on the spindle.

Using Figure 22 as a reference, clamp a V block (A) made of wood, fiber or other suitable material onto the platform railing. Imbed the ball end of the spindle in a piece of soft wood (B) and place the top of the spindle, below the threads, in the V block (A). Clamp a dial indicator onto the railing and locate at point (C). The total indicator reading should not exceed .007" (0.18 mm) when the spindle is rotated. If it does, the spindle must be straightened prior to reuse. To straighten the spindle, place the unthreaded portion of the small and large end in padded V blocks, with the point of maximum indicator readout upward, and then apply a downward force with a padded press or jack as required, until the spindle is within the specifications.

Other parts of the spindle not used as working surfaces may run out considerably more than .007" (0.18 mm), but this should not be regarded as unacceptable.

Although the upper thread end is not a working surface, excessive bending in this area could affect the accuracy of the Hydroset device and/or the EVT unit, if either of these devices is used to verify valve set pressure.

E. Disc Replacement and Disc-Spindle Bearing Requirements

To replace the disc, disassemble the valve in accordance with the instructions provided in Section XII of this manual.

Apply a small amount of lapping compound (1A) on the tip of the spindle. Install the disc, without the disc holder, onto the spindle tip, turning it clockwise until the disc threads drop out. Place a ring lap on a table, or similar flat surface, and wipe the exposed surface of the lap clean. Insert the disc nose into a ring lap, so that the seat contacts the lap surface. Oscillate the spindle using 360 degree oscillations for approximately 15 seconds, then check the spindle tip and disc "pocket" to determine progress (See Figure 23).

The spindle nose should be ground into the disc pocket until the bearing is clearly marked. The band position is shown in Figure 24.

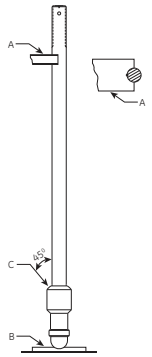

Figure 22: Spindle Check Stand

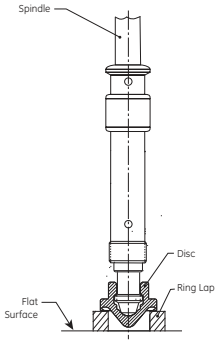

Figure 23: Disc - Spindle Bearing

© 2015 General Electric Company. All rights reserved.

XIII. Maintenance Instructions (Contd.)

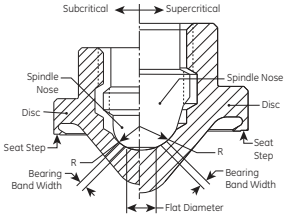

Figure 24: Disc - Spindle Assembly

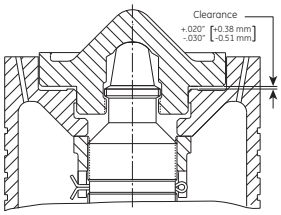

Figure 25: Disc Rock

Table 4a: Grinding Characteristics of Disc Pocket Steam Service Subcritical						
Orifice	Pressure Class: 600, 900, 1500, 2500, 3000					
	Nose Radius R + .003"/-0.002" (+0.08/-0.05 mm)		Flat Diameter		Bearing Band Width	
	in.	mm	in.	mm	in.	mm
1	0.275 [1]	6.99 [2]	0.125	3.18	0.125	3.18
2	0.369 [1]	9.37 [2]	0.188	3.18	0.125	3.18
3	0.495	12.50	0.250	6.35	0.219	5.56
5	0.495	12.50	0.250	6.35	0.219	5.56
4	0.495	12.50	0.250	6.35	0.219	5.56
6	0.495	12.50	0.250	6.35	0.219	5.56
Q	0.682	17.27	0.250	6.35	0.281	5.56
8	0.713	18.03	0.313	7.95	0.313	7.95
R	0.713	18.03	0.313	7.95	0.313	7.95
RR	0.713	18.03	0.313	7.95	0.313	7.95

[1] +/- 0.002
[2] +/- 0.05

The desired band width for subcritical valves is shown in Table 4a, and the desired band width for supercritical valves is shown in Table 5. In addition, the finished machine size of the spindle nose radius, and the flat diameter for each orifice size and valve type are also shown in these two (2) tables.

If the required bearing band cannot be obtained by hand grinding, then this radius should be checked and remachined if necessary.

If the band extends too high on the radius it will be difficult to rock the disc, and the disc may lock up under pressure. If the band is too narrow, the spindle may indent the disc and again the rock will be lost.

Table 5: Grinding Characteristics of Disc Pocket Steam Service Supercritical						
Orifice	Pressure Class: 4500					
	Nose Radius R + .003"/-0.002" (+0.08/-0.05 mm)		Flat Diameter		Bearing Band Width	
	in.	mm	in.	mm	in.	mm
1	0.369 [1]	9.37 [2]	0.188	4.78	0.156	3.96
2	0.369 [1]	9.37 [2]	0.188	4.78	0.156	3.96
3	0.492	12.50	0.250	6.35	0.219	5.56
5	0.492	12.50	0.250	6.35	0.219	5.56
4	0.492	12.50	0.250	6.35	0.219	5.56

[1] +/- 0.002
[2] +/- 0.05

When the bearing area is re-established, clean both surfaces. Then apply lubricant to the spherical surface of the spindle tip, and work it into the surfaces by rotating the disc on the spindle.

Place the disc holder on the spindle, allowing it to rest on the face of the disc collar as previously shown in Figure 12 on Section XII.B. Then assemble the disc holder and new disc. The disc should be free enough to rock on the spindle tip. If there is no freedom, lower the disc collar until the disc is free to rock slightly initially, approximately .001 to .002 inches (0.25 to 0.05 mm) rock. The disc collar must then be lowered two additional notches from this initial position and secured with a stainless steel cotter pin. (See Figure 25).

Note: Failure to provide the recommended disc rock at assembly will result in a leaking valve.

© 2015 General Electric Company. All rights reserved.

XIII. Maintenance Instructions (Contd.)

F. Grinding the Compression Screw

Some valve designs feature a compression screw with a spherical radius tip as shown in Figure 26. For these designs, the compression screw spherical bearing surface must be ground into the upper washer so that full contact along the spherical radius is obtained. To grind these items, a 320 grit (Clover 1A) lapping compound is used for roughing-in and then finish lap with a suitable grade lapping compound (typically between 320 and 600), until a satisfactory bearing band is obtained. Clean the compression screw, and upper spring washer when completed.

G. Thrust Bearing Surfaces

For those designs utilizing a ball-type thrust bearing, the aligning washer must match evenly to the lower thrust bearing spherical surface, such that full face contact is achieved between the parts (see Figure 27). Therefore, grind together, or replace the entire thrust bearing, as necessary.

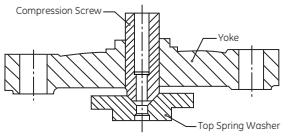

Figure 26: Compression Screw Assembly

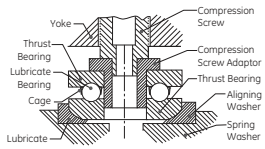

Figure 27: Thrust Bearing Assembly

H. Grinding The Lower Spring Washer

The lower spring washer bearing surface must be ground to the spindle. To grind the lower spring washer, a 320 grit (Clover 1A) lapping compound is used for roughing-in, and then finish lap with 1000 Grit Kwik-Ak-Shun lapping compound until a satisfactory bearing band is obtained. The bearing width should be .125" (3.2 mm) min. to .063" (4.8 mm) max. Clean the lower spring washer and spindle when complete.

© 2015 General Electric Company. All rights reserved.

XIV. Inspection and Part Replacement

A. General Information

Once the valve is disassembled, the appropriate parts can be inspected for damage and their suitability for reuse.

B. Specific Steps

As a minimum, the following parts should be inspected as specified below:

Table 6: Allowable Guide/Disc Holder Clearance											
Orifice	Valve Type (Temp. Class)	Maximum Clearance				Orifice	Valve Type (Temp. Class)	Maximum Clearance			
		B Temp.		D-H Temp.				B Temp.		D-H Temp.	
		in.	mm	in.	mm			in.	mm	in.	mm
1	1715	0.005	0.13	0.008	0.20	6	1765	0.014	0.36	0.014	0.36
	1716						1766				
	1717						1767				
	1719						1769				
	1710						1760				
	1713					Q (4" & 6") (101.6 & 152.4 mm)	1775Q	0.025	0.64	0.025	0.64
2	1725	0.008	0.20	0.012	0.30		1776Q				
	1726						1777Q				
	1727					8	1785	0.027	0.69	0.027	0.69
	1729						1786				
	1720						1786-HP				
	1723						1787				
3	1735	0.008	0.20	.013	0.33	R	1705R (B)	0.020	0.51	-	-
	1736						1705R (D-H)	-	-	0.028	0.71
	1737						1706R (B)	0.020	0.51	-	-
	1739	0.010	0.25	.015	0.38		1706R (D-H)	-	-	0.028	0.71
	1730						1706R-HP	0.020	0.51	0.020	0.51
	1733						1707R	0.020	0.51	0.020	0.51
5	1755	0.011	0.28	0.017	0.43	RR	1705RR	0.020	0.51	0.020	0.51
	1756						1706RR (B)	0.020	0.51	0.028	0.71
	1757						1706RR (D-H)	-	-	0.028	0.71
	1759						1706RR-HP	0.020	0.51	0.020	0.51
	1750						1707RR	0.020	0.51	0.020	0.51
	1753										
4	1745	0.012	0.30	.018	0.46						
	1746										
	1747										
	1749										
	1740										
	1743										

© 2015 General Electric Company. All rights reserved.

XIV. Inspection and Part Replacement (Contd.)

1. Disc Holder

The surface on the end of the disc holder closest to the disc must be free from steam erosion. The two small holes must be open to ensure the passage of steam to the chamber above the disc. Make sure the outside diameter is not egg shaped and the surface is smooth. If any small indication of galling is present, polish the high spots with an emery cloth. If serious or large scale galling is present, the disc holder should be replaced.

2. Guide

Inspect the guide inside diameter for egging, and ensure the inside surface is smooth. The threads on the outside must be in good condition to ensure the upper ring will adjust, even when the valve is hot. If serious or large scale galling is present, the guide should be replaced.

3. Clearance

The maximum clearance between the disc holder and guide should be in accordance with Table 6.

4. Disc

Inspect the disc seat for steam cuts, nicks, or other damage. If the seat step measures less than dimensions specified in Table 2, this indicates that the thermal lip has been lapped to the minimum thickness.

Do not machine any Thermoflex disc; however, a disc which is not below minimum relief can be lapped to remove minor damage (See Figure 18, on Section XIII.B.)

5. Overlap Collar

Inspect the outside diameter for nicks, burrs, tears, pitting and signs of galling. Then, inspect the lugs galling, tearing, and damage.

6. Coverplate

Ensure that the floating washers are free to move and are not bent or deformed. Check the surface of the inside diameter on the floating washers and the washer retainers for tears, pitting, corrosion, and signs of galling. Ensure that the bleed hole in the coverplate is not obstructed.

XV. Re-Assembly of 1700 Series Safety Valve

A. General Information

The Type 1700 Safety Valve can be easily re-assembled after required inspection/maintenance of internal parts has been performed. (Again, refer to Figures 1 to 5 for parts nomenclature.) All parts should be clean prior to assembly. See Section XIX for recommended compounds, lubricants, and tools.

B. Specific Steps

1. If they have been removed, the yoke rods are installed into the base, and then the yoke rod nuts installed. Locate the yoke rods in the original location in the valve base as recorded during disassembly. Lubricate all threads. Yoke rod nuts are then to be torqued using the yoke rod nut torque wrench and socket. Torque nuts in accordance with Table 7.

Note: Use of an impact device to produce required torque values is not recommended.

2. Prior to reinstalling the lower adjusting ring, lubricate the threads of the lower adjusting ring pin and partially insert the pin into the valve body. Now the pin can again serve as a "pointer," or reference point, as previously described in Section XII.B.14 of "Disassembly." Next lubricate the threads of the lower adjusting ring, and install the ring in the valve body. Then, turn the lower adjusting ring clockwise until the top of the ring clears the seat.
3. To position the lower adjusting ring, place a clean ring lap on the nozzle seat and move the lower adjusting ring up until it makes contact with the ring lap. If the original location of the adjusting ring was recorded, simply lower the ring, by moving it down, the same number of notches as was recorded in Step XII.B.12 of "Disassembly." If information on the original lower ring position

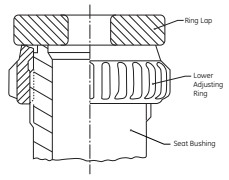

Figure 28: Bushing Seat Assembly

© 2015 General Electric Company. All rights reserved.

Table 7: Yoke Rod Nuts Torque Specification

Valve Type	Torque min. ft-lbs	Torque min. Nm	Torque max. ft-lbs	Torque max. Nm	Valve Type	Torque min. ft-lbs	Torque min. Nm	Torque max. ft-lbs	Torque max. Nm
1710	150	203	200	271	1755	315	427	415	563
1713	230	312	500	678	1756	315	427	415	563
1715	150	203	195	264	1757	315	427	415	563
1716	150	203	195	264	1759	350	475	450	610
1717	150	203	195	264	1760	1200	1627	1750	2373
1719	150	203	200	271	1765	315	427	415	563
1720	185	251	285	386	1766	315	427	415	563
1723	315	427	415	563	1767	315	427	415	563
1725	160	217	250	339	1769	315	427	415	563
1726	150	203	200	271	1775	550	746	700	949
1727	150	203	200	271	1776	400	542	500	678
1729	185	251	285	386	1775Q	550	746	700	949
1730	315	427	415	563	1776Q	400	542	500	678
1733	350	475	450	610	1777Q	550	746	700	949
1735	300	407	375	508	1785	550	746	700	949
1736	165	224	250	339	1786	550	746	700	949
1737	165	224	250	339	1786-HP	850	1152	1100	1491
1739	315	427	415	563	1787	850	1152	1100	1491
1740	350	475	450	610	1705R	550	746	700	949
1743	850	1152	1100	1491	1706R	550	746	700	949
1745	315	427	415	563	1706R-HP	850	1152	1100	1491
1746	315	427	415	563	1707R	850	1152	1100	1491
1747	315	427	415	563	1705RR	550	746	700	949
1749	350	475	450	610	1706RR	550	746	700	949
1750	350	475	450	610	1706RR-HP	850	1152	1100	1491
1753	850	1152	1100	1491	1707RR	850	1152	1100	1491

is not available, the ring should be lowered, by moving it down one notch for every 600 psig (20.7 barg) of set pressure.

Note: For a valve set pressure of 1200 psig (81.6 barg), the ring will have to be lowered two (2) notches below the bushing seat. This will be the starting position, with the final position being determined during field testing (See Figure 28).

4. Once the lower adjusting ring is in its correct location, lock it in place by screwing in the lower adjusting ring pin. Verify that the lower ring is capable of a slight movement. If the lower ring does not move, the pin is too long. Should this be the case, grind the end of the pin slightly to shorten it, while retaining the original tip contour, then reinstall the pin.
5. If the upper adjusting ring has been removed from the guide, lubricate the ring threads and re-install the ring on the guide.
6. Install the adjusting ring and guide assembly into the valve base such that the scribe marks will be visible from the valve outlet or an inspection port. Place a scale or other suitable thin flat metal object on the lower face of the upper adjusting ring and measure the overall length of the upper ring and guide assembly. Adjust the upper ring to the

© 2015 General Electric Company. All rights reserved.

Dimension C (See Figure 29) recorded in Step 12 of Section XII.B., "Disassembly". Observe the marks made on the ring and guide and adjust the ring to align the marks (see Figure 30.) Recheck the overall length of the adjusting ring and guide assembly to assure that the upper ring is in its original position.

7. Measure from the top of the guide to the bushing seat with a depth micrometer. Subtract Dimension B as measured in Step 12, Section XII.B., "Disassembly," from the dimension previously measured. The difference is the distance the upper adjusting ring must be lowered. Refer to Table 8 and 9, to determine the number of notches that the ring is to be lowered.
8. Once certain that the upper adjusting ring/guide assembly is properly set, lubricate the guide seating surface in the valve base, and reinstall the assembly into the base; then, lubricate the threads of the upper adjusting ring pin, and lock the ring/guide assembly in place by screwing in the pin. Verify that the upper ring is capable of a slight movement. If the upper ring does not move, the pin is too long. Should this be the case, grind the end of the pin to shorten it, while retaining the original tip contour, then reinstall the pin.
9. Clamp the spindle in a padded vise, with the "ball end" of the spindle upward.
10. Verify that the spindle bearing has been ground to the disc pocket, as specified in Section XVI.E, "Disc Replacement and Disc Spindle Bearing Requirements," of this manual.

Note: This step must be accomplished before proceeding with reassembly.

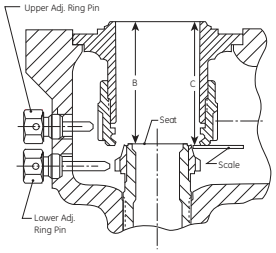

Figure 29: Guide - Bushing Seat Assembly

11. If the lift stop was removed from the spindle, lubricate the threads and install the lift stop. Do not install the cotter pin at this time.
12. If the disc collar was removed, lubricate the threads and install on the spindle. Do not install the cotter pin at this time. Then, carefully lower the disc holder onto the spindle, allowing it to sit on the face of the disc collar.
13. Thread the disc onto the spindle, ensuring that the disc is free to "rock" on the spindle tip as specified in Section XIII.E., "Disc Replacement and Disc Spindle Bearing Requirements," of this manual. If disc "rock" is not satisfactory, correct the cause before proceeding. When disc "rock" is satisfactory, remove the disc and disc holder, and secure the disc collar with a stainless steel cotter pin. Using side cutters, carefully cut off excess cotter pin legs, and bend the cotter pin for a neat installation.
14. Lubricate the spindle tip, and assemble the disc holder and disc to spindle. Recheck the rock.
15. Remove complete assembly from the vise, being sure to protect the disc seat surface at all times.
16. Prior to installing the spindle assembly into the valve base, wipe the disc seat with a soft, lint-free cloth. Then, carefully install the spindle assembly into the guide.
17. Install the coverplate over the spindle assembly, ensuring that the coverplate is correctly oriented with regard to the valve base, as previously marked for this purpose during disassembly (See Step XII.B.9.) Then, install the coverplate nuts, with the nuts being only hand tightened.

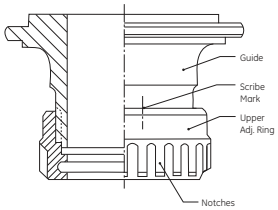

Figure 30: Upper Adj. Ring - Guide Assembly

© 2015 General Electric Company. All rights reserved.

Table 8: Adjusting Ring Presetting Information

Orifice	Orifice Area in[1]	Orifice Area cm[1]	Set Pressure Range[6] min. psig	min. barg	max. psig	max. barg	Lower Ring Position[2,4]	Saturated Steam (Temp. Class B) Upper Ring (Seat)[3,6]	Saturated Steam Upper Ring (Disc Holder)[5]	Superheated Steam (Temp. Class D, E, F, G, H) Upper Ring (Seat)[3,6]	Superheated Steam Upper Ring (Disc Holder)[5]	Overlap Collar Position[2,3] Std. Lift	Overlap Collar Position[2,3] Rest. Lift
#1	0.994	6.413	101	6.96	300	20.68	1N down per 600 psig. Maximum 5N down	Seat Level	10N (down)	Seat Level	10N (down)	6N (down)	3N (down)
			301	20.75	500	34.47		20N (up)	10N (up)	Seat Level	10N (down)		
			501	34.54	900	62.05		20N (up)	10N (up)	Seat Level	10N (down)		
			901	62.12	1500	103.42		15N (up)	5N (up)	5N (down)	15N (down)		
			1501	103.49	2500	172.37		10N (up)	3N (down)	10N (down)	23N (down)		
			2501	172.44	2800	193.05		10N (up)	3N (down)	10N (down)	23N (down)		
			2801	193.12	3000	206.84		5N (up)	8N (down)	15N (down)	28N (down)		
#2	1.431	9.232	101	6.96	300	20.68	1N down per 600 psig. Maximum 5N down	Seat Level	12N (down)	Seat Level	12N (down)	7N (down)	3N (down)
			301	20.75	500	34.47		20N (up)	8N (up)	Seat Level	12N (down)		
			501	34.54	900	62.05		20N (up)	8N (up)	Seat Level	12N (down)		
			901	62.12	1500	103.42		15N (up)	3N (up)	5N (down)	17N (down)		
			1501	103.49	2500	172.37		10N (up)	Disc Holder Level	10N (down)	22N (down)		
			2501	172.44	2800	193.05		10N (up)	Disc Holder Level	10N (down)	22N (down)		
			2801	193.12	3000	206.84		5N (up)	7N (down)	15N (down)	27N (down)		
#3	2.545	16.419	101	6.96	300	20.68	1N down per 600 psig. Maximum 5N down	Seat Level	16N (down)	Seat Level	16N (down)	8N (down)	4N (down)
			301	20.75	500	34.47		25N (up)	9N (up)	Seat Level	16N (down)		
			501	34.54	900	62.05		25N (up)	9N (up)	Seat Level	16N (down)		
			901	62.12	1500	103.42		20N (up)	4N (up)	10N (down)	26N (down)		
			1501	103.49	2500	172.37		15N (up)	Disc Holder Level	20N (down)	36N (down)		
			2501	172.44	2800	193.05		15N (up)	Disc Holder Level	20N (down)	36N (down)		
			2801	193.12	3000	206.84		15N (up)	Disc Holder Level	20N (down)	36N (down)		
#5	3.341	21.555	101	6.96	300	20.68	1N down per 600 psig. Maximum 5N down	8N (down)	25N (down)	8N (down)	25N (down)	10N (down)	5N (down)
			301	20.75	500	34.47		50N (up)	34N (up)	Seat Level	16N (down)		
			601	34.54	900	62.05		40N (up)	24N (up)	10N (down)	26N (down)		
			901	62.12	1500	103.42		40N (up)	24N (up)	10N (down)	26N (down)		
			1501	103.49	2500	172.37		40N (up)	24N (up)	15N (down)	31N (down		
			2501	172.44	2800	193.05		45N (up)	29N (up)	25N (down)	41N (down		
			2801	193.12	3000	206.84		45N (up)	29N (up)	25N (down)	41N (down		
#4	3.976	25.652	101	6.96	300	20.68	1N down per 600 psig. Maximum 5N down	9N (down)	25N (down)	9N (down)	25N (down)	9N down	4N (down)
			301	20.75	500	34.47		55N (up)	38N (up)	Seat Level	17N (down)		
			501	34.54	900	62.05		50N (up)	33N (up)	10N (down)	27N (down)		
			901	62.12	1500	103.42		45N (up)	28N (up)	15N (down)	32N (down)		
			1501	103.49	2500	172.37		45N (up)	28N (up)	20N (down)	37N (down		
			2501	172.44	2800	193.05		45N (up)	28N (up)	25N (down)	42N (down)		
			2801	193.12	3000	206.84		45N (up)	28N (up)	25N (down)	41N (down		
#6	7.070	45.613	101	6.96	300	20.68	1N down per 600 psig. Maximum 5N down	Seat Level	45N (down)	Seat Level	45N (down)	13N (down)	6N (down)
			301	20.75	500	34.47		70N (up)	25N (up)	Seat Level	45N (down)		
			501	34.54	900	62.05		65N (up)	20N (up)	10N (down)	55N (down)		
			901	62.12	1500	75.84		60N (up)	15N (up)	20N (down)	65N (down)		
6"-Q	11.050	71.290	All Pressures				1N down per 600 psig. Maximum 3N down	Seat Level	45N (down)	½ Turn Below Seat Level	81N (down)	16N (down)	8N (down)
4"-Q	12.250	79.032										20N (down)	10N (down)
#8	14.180	91.484											
R	16.000	103.226											
RR	19.290	124.451											

[1] If valve is to be tested on superheated steam, set lower ring at seat level.
[2] Set notches down from the point the lowest scribe line is level with the top floating washer.
[3] All overlap collar adjustments are down from this bottom scribe mark.
[4] Position reference to seat level
[5] Position reference to the bottom of disc holder.
[6] For pressures over those listed in this table, use the same ring setting as the highest listed pressures.

© 2015 General Electric Company. All rights reserved.

Table 9: General Adjusting Ring Information

Orifice	Pressure Class	Total Number of Notches: Lower Ring	Total Number of Notches: Upper Ring	Number of Notches Disc Holder to Seat: Lower Ring	Number of Notches Disc Holder to Seat: Upper Ring	Distance Traveled per Notch: Lower Ring in.	Lower Ring mm	Upper Ring in.	Upper Ring mm
#1	600 - 1500	18	22	7	10	.004	0.09	.003	0.06
	2000 - 4500		28		13	.004	0.09	.002	0.05
#2	All	21	31	8	12	.003	0.08	.002	0.05
#3	All	31	41	12	16	.002	0.05	.002	0.04
#5	All	31	37	12	17	.002	0.05	.002	0.04
#4	All	31	47	12	16	.002	0.05	.002	0.04
#6	600 - 1500	41	56	30	45	.002	0.04	.001	0.03
	2000 - 3000				40	.002	0.04	.001	0.03
Q	All	48	62	30	45	.002	0.04	.001	0.03
#8	All	50	83	36	45	.001	0.03	.001	0.03
R, RR	All	50	83	32	45	.001	0.04	.001	0.03

18. Next, install the yoke and compression screw assembly over the yoke rods and spindle.
19. Next, refer to Figure 31 and establish Dimension A.
20. Pull up on the spindle until the lift stop contacts the coverplate and repeat the measurement of Dimension A, while the lift stop and coverplate are in contact. The difference between these two measurements is the valve lift. The valve lift should be equal to the nameplate lift, plus the additional recommended lift as shown in Table 10.

Note: Do not deviate from stamped nameplate lift.

21. If the measured dimension is:

a. Correct:

1. Remove the yoke and coverplate.
2. If the cotter pin has been removed from the lift stop, lift the spindle assembly from the valve and disassemble it.
3. Install the lift stop cotter pin, re-assemble the spindle assembly, and re-install the spindle assembly into the valve guide.
4. Install the coverplate and torque coverplate nuts to the correct values per stud size. Stud size .500" (12.70 mm), torque 30 ft-lbs (40.67 Nm). Stud size .625" (15.88 mm), torque 60 ft-lbs (81.35 Nm). Stud size .750" (19.50 mm), torque 100 ft-lbs (135.58 Nm). (Do not re-install yoke at this time.)

b. Incorrect:

1. Remove yoke and coverplate.
2. Adjust valve lift, as required, in the following manner:

a. Increase valve lift by moving the lift stop down one (1) notch for each .010" (0.25 mm) increase required.

b. Decrease valve lift by moving the lift stop up one (1) notch for each .010" (0.25 mm) decrease required.

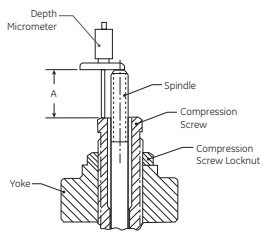

Figure 31: Yoke-Spindle Assembly

© 2015 General Electric Company. All rights reserved.

XV. Re-Assembly of 1700 Series Safety Valve (Contd.)

Table 10: Required Minimum Lift

Orifice Designation	Minimum Certified Lift		Additional Recommended Lift[1]							
			Temperature Class							
			A		B		C		D, E, F, G, H	
	in.	mm	in.	mm	in.	mm	in.	mm	in.	mm
1	0.281	7.14	0.020	0.51	0.020	0.51	0.030	0.76	0.030	0.76
2	0.338	8.59	0.030	0.76	0.030	0.76	0.040	1.02	0.040	1.02
3	0.450	11.43	0.030	0.76	0.030	0.76	0.040	1.02	0.040	1.02
5	0.516	13.11	0.030	0.76	0.030	0.76	0.040	1.02	0.040	1.02
4	0.563	14.30	0.030	0.76	0.030	0.76	0.040	1.02	0.040	1.02
6	0.750	19.05	0.030	0.76	0.030	0.76	0.040	1.02	0.050	1.27
7	0.938	23.83	0.030	0.76	0.040	1.02	0.050	1.27	0.050	1.27
1775Q/1776Q	0.987	25.07	0.030	0.76	0.040	1.02	0.050	1.27	0.050	1.27
1775Q/1776Q	0.938	23.83	0.030	0.76	0.040	1.02	0.050	1.27	0.050	1.27
1777Q	0.938	23.83	0.040	1.02	0.050	1.27	0.050	1.27	0.060	1.52
8	1.063	27.00	0.040	1.02	0.050	1.27	0.050	1.27	0.060	1.52
R	1.129	28.68	0.050	1.27	0.050	1.27	0.060	1.52	0.070	1.78
1705RR/1706RR	1.240	31.50	0.040	1.02	0.050	1.27	0.050	1.27	0.060	1.52
1707RR	1.240	31.50	0.050	1.27	0.050	1.27	0.060	1.52	0.070	1.78

[1] Total lift tolerance is +.020"/-.000" (+0.51/-0.00 mm). Per ASME Section I Code, the valve lift must be mechanically verified and shall meet or exceed the required lift.

22. Verify that the valve lift is now correct by repeating Steps 17 through 21. If the lift is correct, proceed to Step 21.a. If the lift is incorrect, repeat Step 21.b.
23. If the overlap collar has been removed from the spindle, lubricate the collar threads and place over the spindle with the notches in the collar up (i.e., away from the coverplate). Note that the overlap collar has four circumferential scribe lines. The lower scribe line is the one farthest away from the notches. (See Figure 32.) Thread the overlap collar onto the spindle by turning in a clockwise direction, until the lower scribe line is even with the visible floating washer. Align the nearest overlap collar notch with the drilled hole in the spindle by moving the overlap collar down.
24. Refer to Table 11 before making the initial overlap collar adjustment.

Note: These adjustments differ for each orifice size. (Also note that restricted lift valves require a different overlap collar adjustment).

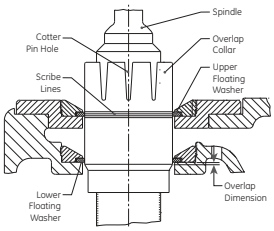

Figure 32: Collar and Spindle Assembly

© 2015 General Electric Company. All rights reserved.

XV. Re-Assembly of 1700 Series Safety Valve (Contd.)

25. To adjust the overlap collar, move the collar down the number of notches specified in Table 11 or, if the original setting is to be re-established, reset the collar to the position previously recorded during disassembly. (See Section XII.B.8.)
26. Install cotter pin through overlap collar notches and spindle. Trim cotter pin to proper length, and bend the ends to secure the overlap collar and spindle together.
27. Before installing the spring washer, lubricate the bearing surfaces on lower spring washer and the spindle. Then, install lower spring washer onto the spindle.
28. Determine which end of the spring is to be fitted to the lower spring washer as determined in the disassembly procedure. (See Section XII.B.7.) Lower the spring gently over the spindle until it is seated on lower spring washer. Install the top spring washer onto the spring, and insure that the lug engages the left yoke rod when facing in the same direction as the outlet.
29. If compression screw has been removed, lubricate the threads of the compression screw and yoke. Install the lock nut onto the compression screw and thread the compression screw into yoke, until the screw is just protruding from lower end of the yoke.

Note: If the valve utilizes a bearing with a compression screw adaptor as shown in Figure 26 (Section XIII.F), install the adaptor onto the top spring washer. Install the bottom race and pack the thrust bearing with lubricant, then install the bearing and the top race into the adaptor.

30. Lubricate upper yoke rod threads. Carefully position the yoke assembly over the yoke rods taking care to align the compression screw with either the bearing or upper spring washer as applicable.
31. Using the yoke rod nut torque wrench and the socket, torque the yoke rod nuts as specified in Table 7.
32. Next, return the compression screw to its original position recorded during disassembly (see Section XII.B.4), and tighten compression screw lock nut.
33. Ensure that the top washer lug does not remain in contact with the yoke rod, after final compression screw adjustment.
34. Install the release nut onto the spindle and thread clockwise, until the release nut is fully engaged on the spindle thread.
35. Install the cap over the release nut, and seat the cap firmly into place on the yoke. Install the top lever in the cap and, then, insert the lever pin through the top lever and cap holes.
36. Adjust the release nut, until it clears top lever by .125" (3.18 mm). Remove the lever pin, top lever, and cap. Next, insert a cotter pin through the release nut slots and spindle, and spread cotter pin ends. (If spindle has been replaced, a cotter pin hole must be drilled through the replacement spindle.) Re-assemble the cap with the drop lever, top lever, and top lever pin. Install a cotter pin to lock the top pin in place. A final check should be made to ensure the proper clearance exists between the release nut and the top lever. Finally, tighten cap set screw to secure the cap.

Table 11: Overlap Collar Adjustment

Orifices	Bore Diameter		Adjustment Notches	
	In	mm	Standard	Restricted Lift
1	1.250	31.75	6	3
2	1.350	34.29	7	3
3	1.800	45.72	8	4
5	2.062	52.37	9	4
4	2.250	57.15	10	5
6	3.000	76.20	13	6
7	3.750	95.25	16	8
Q	3.984	101.19	16	8
8	4.250	107.95	18	9
R	4.515	114.68	20	10

© 2015 General Electric Company. All rights reserved.

XVI. Setting and Testing

A. Field Testing

A.1 General Information

All 1700 Series Maxiflow safety valves are steam tested at the factory to verify set pressure adjustability and seat tightness. Every valve is set to have a clean popping action and to reseat tightly. However, because the boiler used in setting the valves has a small capacity, compared to the capacities of the Maxiflow type of valves, adjustments on the actual installation are necessary to ensure proper valve action and "adjusting ring" settings. When supplied for pressures over 2500 psig (172.37 barg), the compression screw lock nut will be locked to the compression screw with a 1/4-20 Allen screw, in order to locate the exact amount of compression screw engagement in the valve yoke. The compression screw has then been backed out to decrease the spring load on the seat by 75%. See Red Letter Warning Tag, attached to compression screw of each Maxiflow valve by means of double strand sealing wire, which reads as follows:

WARNING

This valve has been steam tested and set to the proper set pressure; however the compression on the spring has been relaxed by backing out the compression screw.

Before the hydrostatic test on the boiler the compression screw must be turned clockwise until the lock nut makes up on the yoke .

Remove the 1/4-20 Allen screw to allow the lock nut to turn on compression screw for future adjustments.

(Note attached tag for hydrostatic plug removal).[1]

[1] The parenthetical statement is a reference to the tag shown in Figure 36 in Section XVIII.A.

Upon completion of hydrostatic testing of the boiler, but prior to placing the boiler in service, ensure that the hydrostatic plugs are removed from all valves (**Note:** See Figure 6 in Section X: Operating Principles of this manual). The use of Consolidated Hydroset or EVT, units can serve to establish set pressure but cannot be used for verifying blowdown, lift, etc (For additional information, see Section XVI.A5.) Gagging of other valves not being set will not generally be necessary; however, for setting of high pressure valves, depending on system pressure being used, it may be necessary to gag the lower set valves.

Boiler safety valve tests can be conducted with the unit either on or off the line. However, with the unit on the line under full load, a sudden load drop could be dangerous as most of the safety valves will be gagged. Therefore, it is recommended that the safety valves be tested and adjusted with the boiler isolated, or with light load. Boiler control can then be maintained, with little or no outside influence due to load change.

It is important to note that all adjustments of adjusting rings are GE's initial adjustments only, and are not intended to be final adjustments. This final adjustment must be made on the operating system with conditions approximately those that will be realized under actual operating conditions. Valves are factory set for long blowdown to prevent chattering under initial setting conditions.

Factors which can affect valve operation, and which should be considered when initially setting a valve, are as follows:

1. Ambient temperature near the valve and valve temperature stabilization.
2. Line vibration.
3. Line capacity at time when the valve must lift.
4. Discharge stack or drain piping binding.
5. Fluid flow vibrations set up by upstream bends and other disturbances.

A.2 Popping Point Adjustment

Note: Prior to beginning this procedure, lower the operating pressure on the boiler to a point which ensures that the valve will not open during adjustment of the compression screw.

To change the popping pressure of the valve, remove the cap and lever assembly, loosen the compression screw locknut and turn the compression screw clockwise to increase the pop point, or counterclockwise to decrease the pop point.

After each adjustment of the compression screw, the lock nut should be tightened. The arm of the top spring washer should always be free from bearing against the yoke rod. This can be accomplished by holding a screw driver between the arm and the rod to prevent any movement of the top spring washer while adjusting the compression screw. Install the cap and lever assembly after set pressure adjustments have been completed, as outlined in the Re-Assembly instructions (See Section XV of this manual.)

© 2015 General Electric Company. All rights reserved.

XVI. Setting and Testing (Contd.)

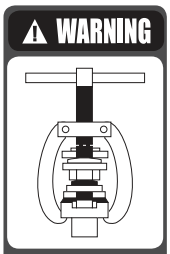

Gag safety valve during ring adjustments to avoid possible severe personal injury or death.

A.3 Ring Adjustments, Blowdown and Overlap Collar Adjustments

1. **General**
   The positions of the upper adjusting ring and the lower adjusting ring are locked by means of the upper adjusting ring pin and the lower adjusting ring pin, respectively. These pins are threaded into the valve body and engage notches which are cut into the rings. To adjust either ring, the corresponding ring pin must be removed. A screw driver (or other suitable tool), inserted through the ring pin hole, can be used to turn the rings.

Note: Always gag the Safety Valve for protection. This will ensure that the disc is not accidentally lifted from the seat by the adjusting tool during ring adjustment. This will also ensure that an unexpected rise in system pressure will not be a hazard to service personnel.

2. **Lower Ring Adjustment**
   If the lower adjusting ring position is in question, the factory position can be attained as follows:
   a. Gag the safety valve to prevent the disc from being accidentally lifted from the seat.
   b. Remove the service port plugs.
   c. Remove the lower adjusting ring pin.
   d. Move the lower adjusting ring up until it contacts the disc holder.
   e. Refer to Figure 33, and move the lower adjusting ring down the number of notches indicated in Column A, plus 1 additional notch for each 600 psig (41.37 barg) increment of set pressure, not to exceed six notches (see Table 12).
   f. Lock the lower adjusting ring into position by installing the lower adjusting ring pin, clockwise, until tight.
   g. Remove the gag.

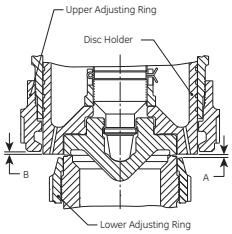

Figure 33

Table 12: Final Factory Positions (Field Starting Positions)

Orifice	Lower Ring Holder to Seat in Notches (Column A)	Upper Ring Holder to Seat in Notches (Column B)
1	7	10
2	8	12
3	12	16
5	12	16
4	12	16
6	30	45
7	30	45
Q	30	45
8	37	45
R	38	47

© 2015 General Electric Company. All rights reserved.

h. Test the valve on the system and adjust the lower ring to the lowest position which does not produce simmer. The ideal ring position must then be found by test for the set of operating conditions present. If simmer is present or the valve fails to lift, the lower ring should be moved upward slowly, one notch at a time, to remove the simmer. The most ideal position for the lower ring is the lowest position that does not introduce simmer or a buzzing sound.

3. Relationship Between Upper Ring and Overlap Collar Adjustments and Blowdown

The correct method of obtaining proper blowdown adjustment can be best explained by reference to Figure 34.

The upper ring is used to obtain full lift at the popping pressure. However, its position also determines the point at which the valve begins to drop out of full lift and starts the closing portion of its cycle. For example, if the upper ring is in such a position that the valve barely attains full lift at the popping pressure, and starts to drop out of full lift at a slight reduction of boiler pressure, the first portion of the valve cycle will be represented by the line ABF. If it were not for the lift stop, the action of the valve would be represented by the line ABCF. If the upper ring is in a more positive position (lower setting), the action of the valve would be represented by the line ABG and, if it were not for the lift stop, the line ABDG. If the upper ring is in a still lower position, the action of the valve is represented by the line ABH and, if it were not for the lift stop, ABEH. From this it can be seen that a lower position of the upper ring causes that valve to remain in full lift for a longer period of time and over a greater period of pressure reduction.

It will further be noted that there is a distinct difference between the actual overlap setting on the valve and the point at which the overlap begins to take effect. This can be understood since the area in the overlap vent begins to reduce considerably ahead of the point where the upper corner of the overlap bevel actually enters the floating washer. This has the effect of rounding off the corners of the diagram at points J, K & L. If the upper ring is in a position to produce the line ABH, the overlap will have to be set considerably higher to obtain a short blowdown than if the upper ring is set at such a position as to produce the line ABF. Excessive overlap settings may cause seat damage when the valve closes. It is therefore desirable to set the upper ring in such a position as to cause the valve to stay in full lift for as short a time as possible. The most desirous complete cycle is represented by the line ABFJM.

Note: When steam safety valves are subjected to an excessively high water level, the valve can be expected to have a long blowdown which the upper adjusting ring position will be unable to correct. It is recommended that the cause of high water level be corrected, so valves may function correctly at the ordered condition.

Note: If a superheater valve is set with low temperature steam, it is advisable to increase the blowdown to compensate for the change in density and other thermal effects taking place when the steam is brought up to working temperature. An approximate rule is to add 1/2 of 1% of set pressure to the blowdown for each 100°F (37.8°C) of steam temperature below the final temperature.

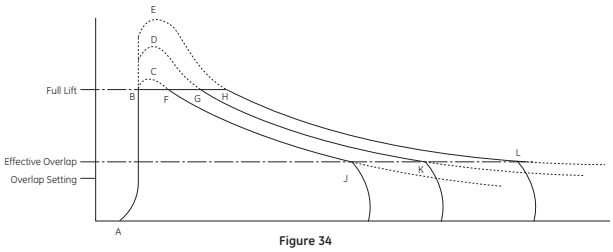

Figure 34

© 2015 General Electric Company. All rights reserved.

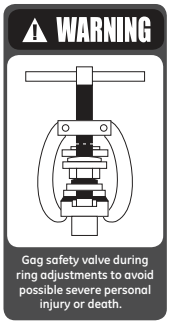

4 Upper Ring Adjustment If the upper adjusting ring position is in question, the factory position can be attained as follows:

a. Gag the safety valve to prevent the disc from being accidentally lifted from the seat.

b. Remove both service port plugs.

c. Remove upper adjusting ring pin.

d. Move the upper adjusting ring until it is level with the disc holder. A flashlight may be needed to provide adequate lighting for this observation. If so, the observation can be made from one of the service ports while the flashlight is positioned to shine through the other service port.

e. From this point, move the upper adjusting ring down the number of notches indicated by Column B of Table 12. This is also Dimension B in Figure 33.

f. Lock the upper adjusting ring into position by installing the upper adjusting ring pin.

g. Remove the gag.

5 Blowdown Adjustments

When further adjustments are required to obtain final blowdown setting, the upper adjusting ring should be moved 5-10 notches at a time as follows:

a. To reduce blowdown: MOVE RING UP – TURN COUNTER CLOCKWISE.

b. To increase blowdown: MOVE RING DOWN – TURN CLOCKWISE.

It is possible to raise the upper ring too far and prohibit attainment of full lift. When this occurs, lower the upper adjusting ring to the point where full lift is attainable and finalize the blowdown setting with the overlap collar adjustments. (See Section XVI.A3.6.) If the valve fails to lift, the lower adjusting ring requires further adjustment (See Lower Ring Adjustment.)

In attempting to obtain blowdown of 4%, it is important to be sure that the upper and lower adjusting ring positions are not so far apart as to cause loss of control of the valve. The first indication of reaching this condition is a slow "up and down hunting" action of the valve immediately before closing. If this action occurs at a blowdown longer than desired, moving both rings downward a small amount will generally produce a slightly shorter blowdown. When making this adjustment, move the upper ring twice as many notches as the lower.

After adjustments are complete, check the ring pins to see that they engage the ring grooves, but without touching the bottom of the groove. The pins should not bear against the rings.

6 Overlap Collar Adjustment

The overlap collar is a secondary adjustment point for blowdown control. It is utilized in conjunction with the upper adjusting ring. There will be some field conditions where it may not be necessary to use the overlap collar. However, in no case should the overlap collar be used exclusively for blowdown setting without first giving due adjustment attention to the upper adjusting ring.

The overlap collar is moved downward to shorten blowdown and upward to lengthen blowdown. After final setting, be sure to lock the overlap collar in position by installing the cotter pin.

A guide to how movement of the overlap collar assists in making final blowdown adjustments is as shown in Table 13.

© 2015 General Electric Company. All rights reserved.

Table 13: Movement of Overlap Collar	
Orifice	**Movement of Overlap Collar**
1, 2 and 3	May not need further adjustment. If needed, move 1 notch at a time.
4 and 5	First adjustment 5 notches. Subsequent adjustments 2-3 notches each time.
6, 7, 8, Q and R	First and subsequent adjustment, 5-8 notches each time.

Note: The overlap collar position shown in Table 13, are final GE factory settings, but are only starting positions for field setting of blowdown. Further adjustment may be necessary as stated in Table 13.

A.4 Restricted Lift Valves

A Restricted Lift Valve is defined by a nameplate attached to the valve body. It reads: "Restricted lift Valves, see nameplate for lift".

As a starting position for the adjusting rings, use the method outlined in the this manual for the conventional valves (see Section XV.B).

A.5 Hydroset/EVT* Testing

Periodic test may be required for verification of valve set pressure both Consolidated Hydroset testing device and EVT unit provide for the this capability; however set pressure is the only factor which can be verified. Valves should be initially set using full system pressure (as outlined in sections XIII.A through XIII.C) and the Hydroset device or EVT, used for only subsequent checks of set pressure.

Setting safety valves by the usual method of lifting valves under steam pressure presents a number of problems. In high pressure conventional boilers, superheater tubes may be damaged if the turbine is not operating. Also the expense of feed water, fuel and personnel involved is considerable.

Although these problems cannot be eliminated entirely, they can be reduced by using a hydraulic or electronic device that allows the valve's set pressure to be checked while the system pressure remains below the valves set pressure.

Accuracy of result obtained by the use of either of these devices depends on several factors. First, friction must be reduced as a source of error, so that, for a given pressure, the hydroset or the EVT repeatedly produces exactly the same lifting force. Second, gauge calibration and vibration and the effective seating area between valves of the same size and type will also affect accuracy.

With well calibrated gauges and valve seats in good condition, accuracy on the order of 1% oil set pressure may be expected. Upon request, GE will provide pertinent written material concerning the Consolidated Hydroset Device, or the EVT. This material specifies all required information necessary to ensure proper usage of the these devices.

A.6 Sealing Valves After Test

After testing the valve for proper set point and blowdown, the ring pins, overlap collar and top lever pin will be sealed to conform with the applicable ASME Code. In addition, the coverplate is sealed on restricted lift valves.

Means are provided in the design of all 1700 Series Maxiflow valves, for use under Section I of the ASME Code, for sealing all external adjustments. Seals are installed by GE at the time of shipment. It is also required that seals be installed, after field adjustment or repair of the valves, by the manufacturer, its authorized representative, or the user.

Seals should be installed in such a manner as to prevent changing the adjustment without breaking the seal. They also serve as a means of identifying the manufacturer, repairer or user making the adjustment. ***Unauthorized breakage of the seals will void the valve warranty***.

© 2015 General Electric Company. All rights reserved.

B. Hydrostatic Testing and Gagging

During any hydrostatic test, all safety valves on the unit, which have not been removed and do not have hydroplugs, must be gagged. This gagging procedure prevents the possibility of damage to the safety valve internals in the event that the test pressure exceeds the safety valve set pressure. When adjusting valve set pressures, other valves in the system should also be gagged.

When valves are subjected to working hydrostatic tests not exceeding the set pressure of the low set valve, valves may be gagged rather than using hydrostatic test plugs. For higher pressures, hydrostatic plugs should be used.

Probably the most common source of safety valve trouble is over-gagging. During hydrostatic testing, and during safety valve setting, gags should be applied only hand tight. During setting, over-gagging will also cause damage to the seating surface and result in seat leakage. In applying gags remember that the valve spring will hold the valve closed against its set pressure.

The additional gag load applied should be only enough to ensure that the valves do not lift at the expected overpressure.

During start-up, gags should never be applied when the boiler is cold. The spindle of the safety valve expands considerably with the temperature increase. If it is not free to expand with this temperature change it may become seriously overstressed and bent.

Except for hydrostatic tests, boiler pressure should be brought up to within 80% of the pressure of the low set valve before applying gags.

Tighten the gags of drum and superheater valves with only a light force applied to the gag screw head.

APPLICATION OF TEST GAGS (All Pressures)

Refer to Figure 37 on Section XVIII.B. Remove top lever pin and top lever then loosen the cap screw. Remove cap and drop lever as an assembly. The release nut is fixed to the spindle by means of a cotter pin. Note that the release nut does not quite engage top of compression screw.

Center the test gag in the exposed end of the spindle and hook the legs of gag under the sides of the yoke as shown in Figure 35.

Do not apply the gag load until the system steam pressure is equal to 80% of the pressure to which the low set valve is adjusted.

Apply the gag load by turning the gag screw clockwise. If the gag on any valve has not been tightened sufficiently, the valve will leak. On steam service the leakage is accompanied by a "sizzling" sound.

If this occurs, the hydrostatic test pressure or steam pressure should be reduced until the valve becomes tight and, then, the gag should be tightened still further.

This procedure must be followed exactly, since it is very difficult to stop the leak by additional gagging once it has started. Any attempt to stop the leakage through the valve, without first lowering the system pressure, could result in damage to the valve seats.

After the hydrostatic test or steam test is completed, the gags should be removed when the hydrostatic pressure has been reduced to 80% to 90% of the pressure of the low set valve.

Note: Under no circumstances should the gags be left on the valves.

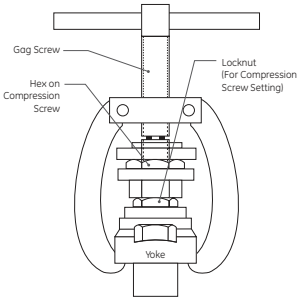

Figure 35: Test Gag

© 2015 General Electric Company. All rights reserved.

XVII. Troubleshooting the 1700 Series Safety Valves

Problem	Possible Cause	Corrective Action
No action, valve does not go into full lift.	A. Upper ring positioned too high.	A. Increase blowdown as outlined in Section XVI.A3.5.
	B. Foreign material trapped between disc holder and guide.	B. Disassemble valve and correct any abnormality as outlined in Section XII. Inspect system for cleanliness.
	C Overlap collar adjusted too low.	C. Reset initial setting per Section XV.B.24, then move overlap collar from right to left one or two notches, then retest. Repeat additional adjustment as necessary.
Simmer	A. Lower ring too low.	A. Adjust per Section XVI.A3.2.
	B. Steam line vibrations.	B. Investigate and correct cause.
Valve leaking and/or exhibits erratic popping actions.	A. Damaged seat.	A. Disassemble valve, lap seating surfaces, replace disc if required, as outlined in Section XII.B.
	B. Part misalignment.	B. Disassemble valve, inspect contact area of disc and nozzle, lower spring washer or spindle, compression screw, spindle straightness, etc.
	C. Operating too close to set pressure.	C. Disassemble valve and check disc.
	D. Discharge stack binding on outlet.	D. Correct source of binding.
Hang-up, or valve does not close completely.	A. Lower ring too high.	A. Move lower ring to the left one notch per adjustment until problem is eliminated.
	B. Foreign material.	B. Disassemble valve and correct any abnormal condition. Inspect system for cleanliness.
	C. Improper disc/guide clearance.	C. Verify proper clearance.
Excessive blowdown	A. Upper ring too low.	A. Decrease blowdown as outlined in Section XVI.A3.4.
	B. Exhaust pressure too high.	B. Decrease exhaust pressure by increasing discharge stack area.
	C. Overlap collar too high.	C. Check initial setting per Section XV.B.24, then move overlap collar from right to left one or two notches, then retest. Repeat additional adjustment as necessary.
Chatter or short blowdown	A. Upper ring way too high.	A. Lower upper ring.
	B. Overlap collar way too low.	B. Raise overlap collar. Re-establish in accordance with Section XV.B.24.
	C. Inlet piping pressure drop too high.	C. Reduce inlet pressure drop to less than one-half of required valve blowdown by redesigning inlet piping.

© 2015 General Electric Company. All rights reserved.

XVIII. 1700 Series Safety Valve Options

A. Hydrostatic Test Plug

Flanged inlet safety valves should be removed from the boiler during hydrostatic tests and boiler nozzles blanked off to prevent possible valve damage.

All welded inlet valves are shipped with a hydroplug, unless otherwise specified. All flanged inlet valves are shipped without a hydroplug, unless otherwise specified.

Valves shipped with a hydroplug are identified by a Red on White CAUTION TAG which is attached to the valve by wires extending through the drain hole in the valve body. (See Figure 36.)

The hydrostatic plugs are placed in the bore of the valve, inside the seating surface. Their purpose is two fold. First they affect closure at a point differing from the seating surface of the valve so that, if the valve is lifted on hydrostatic test, the seating surface is not as likely to be damaged. Second, by raising the disc of the valve off its seat and increasing spring compression, the set pressure of the valve is increased to a point where the valve will not leak at one and one-half times design boiler pressure. It is not necessary to gag safety valves tightly when hydrostatic plugs are used.

These plugs must, of course, be removed from the valves prior to placing the boiler in service. However, they should be retained, and reinstalled, whenever a hydrostatic test exceeding the low set valve pressure is conducted.

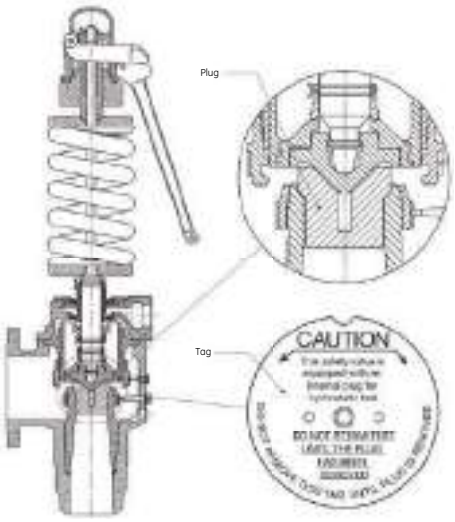

Figure 36: Hydrostatic Test Plug

© 2015 General Electric Company. All rights reserved.

XVIII. 1700 Series Safety Valve Options (Contd.)

B. Domestic Plugs

1. Disassemble the valve as outlined in Section XII of this manual.
2. Remove the hydrostatic test plug from the seat bushing, and lap disc and bushing seat.
3. Always be certain that all parts are clean and free of dirt and foreign material. Dirt trapped on seating surfaces or in the inlet, when the valve is reassembled, will damage the seats. Reassemble the valve as outlined in Section XV of this manual. The lug on the top spring washer should be on the left side of the valve when facing in the same direction as the outlet. (See Figure 37.)
4. Replace the cap, and locate the drop lever vertically on the center line of the valve.
5. Remove the top lever from the cap, and reassemble in position in accordance with Figure 37. If properly positioned, the top lever should have .125" (3.175 mm) of vertical movement prior to engaging bottom surface of release nut. The valve is now ready for the initial field test, on steam, to check valve set point and blowdown.

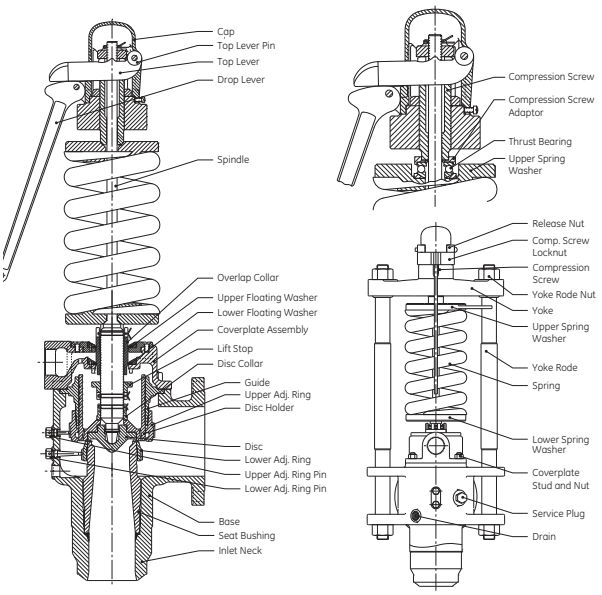

Figure 37: Domestic Plugs

© 2015 General Electric Company. All rights reserved.

XVIII. 1700 Series Safety Valve Options (Contd.)

C. Export Plugs

When hydrostatic plugs are installed in Maxiflow* valves scheduled for shipment to foreign countries, the disc is removed and dipped in preservative, then packed in a box. The package is then inserted into the valve outlet and taped to the floor of the valve body.

To remove the special export plug (Figure 38), the following steps must be followed:

1. Disassemble the valve as outlined in Section XII of this manual.
2. Remove the export plug by turning it counterclockwise, until it is disengaged from the spindle thread.

Note: Hold the disc holder against the disc adjusting collar during this step, otherwise the disc holder will fall from the spindle and become damaged.

3. Remove the seal peel preservative from the disc and thoroughly clean the disc seat with a clean cloth. Then, lap the disc and bushing seat. Lubricate the spindle tip with "Anti-Seize", and assemble the disc and disc holder to spindle by turning the disc clockwise until the dropout thread disengages. Reassemble the valve as outlined in Section XVII of this manual. The lugs on the top spring washer should be on the left side of the valve when facing in the same direction as the outlet (See Figure 37).
4. Remove cotter pin from release nut and position release nut so that .125" (3.175 mm) of clearance is visible between lifting fork and release nut, then install cotter pin.
5. Install lifting gear as outlined in Section XV of this manual.

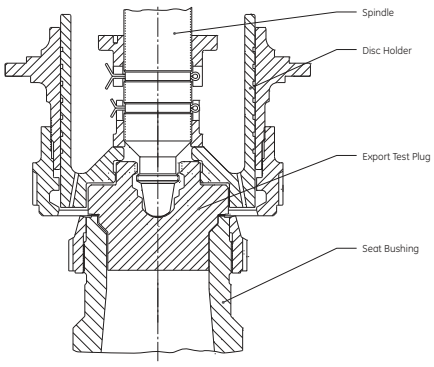

Figure 38: Export Plug

© 2015 General Electric Company. All rights reserved.

XIX. Maintenance Tools and Supplies

A. Lapping Tools

The following tools are required for proper maintenance of Consolidated 1700 Series Safety Valve Seats:

A1. Ring Lap

The ring lap is used for lapping the nozzle and disc seats.

Table 14: Ring Laps[1]

Valve Orifice[2]	Lap Part No.
1	1672806
2	1672807
3	1672808
4	1672810
5	1672809
6	1672811
7 and Q	1672812
8, R and RR	1672813

[1] One set of two (2) Ring Laps is recommended for each orifice valve in service, to assure ample flat laps are available at all times.

[2] Valve orifice number is third digit of valve type number, e.g. a 1737A valve has a #3 orifice.

A2. Lapping Plate

The lapping plate is used for reconditioning the ring laps. Only one 11.00" (279.4 mm) diameter plate is required for all sizes of ring laps.

Resurfacing Plate – 11" Diameter. Part No. 0439004

A3. Lapping Compound

Lapping compound is used as a cutting medium for lapping and polishing the seats and bearing surfaces in the 1700 Series safety valves.

Table 15: Lapping Compounds

Brand	Grade	Grit	Lapping Function	Size Container	Part No.
Clover	1A	320	General	4 oz.	1993
Clover	C	500	Finishing	4 oz.	1994
Kwik-AK Shun	--	1000	Polishing	1 lb.	19911
				2 oz.	19912

B. Gags

Table 16: Gags

Valve Orifice[1]	Gag Part No.
1	4363001
2	4363001
3	4363001
4	4217701
5	4217701
6	4217701
7 and Q	4217701
8, R and RR	4217701

[1] Valve orifice number is third digit of valve type number, e.g. a 1737A valve has a #3 orifice.

C. Lubricant

Table 17: Lubricants

Location	Lubricant
1. Spindle/Disc	Fel-Pro Nickel Ease
2. Compression Screw/Top Spring Washer	
3. Spindle/Bottom Spring Washer	
All Threads	
All Nut Contact Faces	

© 2015 General Electric Company. All rights reserved.

XIX. Maintenance Tools and Supplies (Contd.)

D. Wrench Sizes

Table 18: Wrench Sizes

Maxiflow Series Number	Wrench Sizes [in (mm)]						Maxiflow Series Number	Wrench Sizes [in (mm)]					
	1.438 (36.53)	1.625 (41.28)	2.000 (50.80)	2.375 (60.33)	2.750 (69.85)	3.125 (79.38)		1.438 (36.53)	1.625 (41.28)	2.000 (50.80)	2.375 (60.33)	2.750 (69.85)	3.125 (79.38)
1710		■					1748						
1712			■				1749					■	
1715	■												
1716	■						1750					■	
1717	■						1752						■
1718		■					1755				■		
1719		■					1756				■		
							1757				■		
1720			■				1758					■	
1722				■			1759					■	
1725	■												
1726		■					1765				■		
1727		■					1766				■		
1728			■				1767				■		
1729			■										
							1775				■		
1730				■			1775Q				■		
1732					■		1776					■	
1735		■					1776Q					■	
1736			■				1777Q				■		
1737			■										
1738				■			1785				■		
1739				■			1786				■		
							1787				■		
1740					■								
1742						■	1705R				■		
1745				■			1706R				■		
1746				■			1707R				■		
1747				■									

© 2015 General Electric Company. All rights reserved.

XX. Replacement Parts Planning

The basic objectives in formulating a replacement parts plan are:

- PROMPT AVAILABILITY
- MINIMUM DOWNTIME
- SENSIBLE COST
- SOURCE CONTROL

Guidelines for establishing meaningful inventory levels:

Table 19: Parts Classification

Part Classification	Replacement Frequency	Predicted Availability
Class I	Most Frequent	70%
Class II	Less Frequent But Critical	85%
Class III	Seldom Replaced	95%
Class IV	Hardware	99%
Class V	Practically Never Replaced	100%

Consult the Recommended Spare Parts list (see Section XXII) to define the parts to be included in the inventory plan.

Select parts and specify quantities.

Identification and Ordering Essentials

When ordering service parts, please furnish the following information to ensure receiving the correct replacement parts:

Identify valve by the following nameplate data:

1. Size.
2. Type.
3. Temperature Class.
4. Serial Number.

Example One: 2" 1729WA S/N BG-5171

Example Two: 1 1/2" 1712WD

S/N BH-9547

Specify parts required by:

1. Part Name ((See Figures 1 to 5).
2. Part Number (if known).
3. Quantity.

Contact Parts Marketing: (318) 640-6044

In addition, the serial number is stamped on the top edge of the outlet flange. Be sure to include the one or two letters preceding the figures in the serial number. A typical valve nameplate is shown in Figure 39.

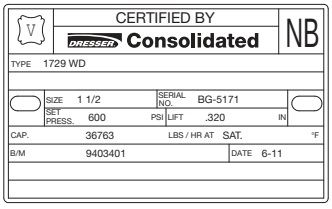

Figure 39: Valve Nameplate

© 2015 General Electric Company. All rights reserved.

XXI. Genuine Consolidated Parts

The next time replacement parts are needed, keep these points in mind:

- GE designed the parts.
- GE guarantees the parts.
- Consolidated valve products have been in use since 1879.
- GE has worldwide service.
- GE has fast response availability for parts.

XXII. Recommended Spare Parts

Table 20: Recommended Spare Parts

Class	Part No. [1]	Part Name	Quantity Parts/Same Size, Type, Set Pressure and Temperature Class Valves in Service		
			Drum	Superheater	Reheat Section
I	8	Disc	1/1	1/1	1/4
	23	Adjusting Ring Pin (Upper)	1/1	1/1	1/4
	24	Adjusting Ring Pin (Lower)	1/1	1/1	1/4
II	2	Disc Holder	1/4	1/4	1/4
	4	Adjusting Ring (Upper)	1/4	1/4	1/4
	9	Adjusting Ring (Lower)	1/4	1/4	1/4
	12	Overlap Collar	1/4	1/4	1/6
	16	Spindle	1/2	1/2	1/6
	17	Spindle Button	1/2	1/2	1/6
III	3	Guide	1/4	1/4	1/4
	5	Spring	1/6	1/6	1/6
	10	Disc Collar	1/4	1/4	1/6
	11	Lift Stop	1/4	1/4	1/6
	18	Compression Screw	1/4	1/4	1/6
	26, 27	Spring Washers (2)	1 Set/6	1 Set/6	1 Set/6
	31	Thrust Bearing Cover	1/4	1/4	1/6
IV	15	Top Plate Screws	1 Set/4	1 Set/4	1 Set/6
	25	Compression Screw Locknut	1/4	1/4	1/6
		Cotter Pins	1 Set/4	1 Set/4	1 Set/6

[1] Refer to Figures 1 to 5 for the part numbers and their corresponding parts.

© 2015 General Electric Company. All rights reserved.

XXIII. Manufacturer's Service, Repair and Training Program

A. Field Service

Utilities and Process Industries expect and demand service at a moment's notice. GE's Field Service team can be depended upon for prompt response, even in extreme off-hour emergency situations.

GE maintains the largest and most competent field service staff in the industry. Service engineers are located at strategic points throughout the United States to respond to customer's requirements for service. Each service engineer is factory trained and long experienced in servicing safety valves. GE's engineers restore disc and seat bushing critical dimensions which affect valve performance, and are capable of modernizing valves in the field.

It is highly recommended that the professional talents of a GE field service engineer be employed to make final field adjustments during the initial setting of all Consolidated safety valves.

B. Factory Repair Facilities

GE's Consolidated factory maintains a GE Repair Center. The repair department, in conjunction with the manufacturing facilities, is equipped to perform specialized repairs and product modifications, e.g. bushing replacements, hydroset calibrations, electromatic relief valve repairs, code welding, pilot replacement, etc.

C. Maintenance Training

Rising costs of maintenance and repair in the utility and process industries indicate the need for trained maintenance personnel. GE conducts service seminars that can help your maintenance and engineering personnel to reduce these costs.

Seminars, conducted either at your site, or at our manufacturing plant, provide participants with an introduction to the basics of preventative maintenance. These seminars help to reduce downtime, reduce unplanned repairs, and increase valve safety. While they do not make "instant" experts, they do provide the participants with "Hands On" experience with Consolidated valves. The seminar also includes valve terminology and nomenclature, component inspection, troubleshooting, setting and testing, with emphasis on the ASME Boiler and Pressure Vessel Code.

For further information, please contact your local Green Tag Center or GE's Consolidated Training Manager at +1 (281) 542-3646.

© 2015 General Electric Company. All rights reserved.

DIRECT SALES OFFICE LOCATIONS

AUSTRALIA
Brisbane
Phone: +61-7-3001-4319
Fax: +61-7-3001-4399

Perth
Phone: +61-8-6595-7018
Fax: +61-8-6595-7299

Melbourne
Phone: +61-3-8807-6002
Fax: +61-3-8807-6577

BELGIUM
Phone: +32-2-344-0970
Fax: +32-2-344-1123

BRAZIL
Phone: +55-19-2104-6900

CHINA
Phone: +86-10-5689-3600
Fax: +86-10-5689-3800

FRANCE
Courbevoie
Phone: +33-1-4904-9000
Fax: +33-1-4904-9010

GERMANY
Ratingen
Phone: +49-2102-108-0
Fax: +49-2102-108-111

INDIA
Mumbai
Phone: +91-22-8354790
Fax: +91-22-8354791

New Delhi
Phone: +91-11-2-6164175
Fax: +91-11-5-1659635

ITALY
Phone: +39-081-7892-111
Fax: +39-081-7892-208

JAPAN
Tokyo
Phone: +81-03-6871-9008
Fax: +81-03-6890-4620

KOREA
Phone: +82-2-2274-0748
Fax: +82-2-2274-0794

MALAYSIA
Phone: +60-3-2161-0322
Fax: +60-3-2163-6312

MEXICO
Phone: +52-55-3640-5060

THE NETHERLANDS
Phone: +31-15-3808666
Fax: +31-18-1641438

RUSSIA
Veliky Novgorod
Phone: +7-8162-55-7898
Fax: +7-8162-55-7921

Moscow
Phone: +7 495-585-1276
Fax: +7 495-585-1279

SAUDI ARABIA
Phone: +966-3-341-0278
Fax: +966-3-341-7624

SINGAPORE
Phone: +65-6861-6100
Fax: +65-6861-7172

SOUTH AFRICA
Phone: +27-11-452-1550
Fax: +27-11-452-6542

SOUTH & CENTRAL AMERICA AND THE CARIBBEAN
Phone: +55-12-2134-1201
Fax: +55-12-2134-1238

SPAIN
Phone: +34-93-652-6430
Fax: +34-93-652-6444

UNITED ARAB EMIRATES
Phone: +971-4-8991-777
Fax: +971-4-8991-778

UNITED KINGDOM
Bracknell
Phone: +44-1344-460-500
Fax: +44-1344-460-537

Skelmersdale
Phone: +44-1695-526-00
Fax: +44-1695-526-01

UNITED STATES
Massachusetts
Phone: +1-508-586-4600
Fax: +1-508-427-8971

Corpus Christi, Texas
Phone: +1-361-881-8182
Fax: +1-361-881-8246

Deer Park, Texas
Phone: +1-281-884-1000
Fax: +1-281-884-1010

Houston, Texas
Phone: +1-281-671-1640
Fax: +1-281-671-1735

Jacksonville, Florida
Phone: +1-844-VALVE-GE

*Denotes a trademark of the General Electric Company.

© 2015 General Electric Company. All rights reserved.

Other company names and product names used in this document are the registered trademarks or trademarks of their respective owners.

GEA19551B 12/2015

Consolidated

IOM 2700 Series Pressure Relief Valves

Vogt Power International

Project #: V17491 / Amata ABPFS

PO #: V0010363

Tag #: 05 LAA10AA401

VOGT POWER INTERNATIONAL
V17491-PVXE-501-00
18-Nov-2016

DRESSER Consolidated

Pressure Relief Valves

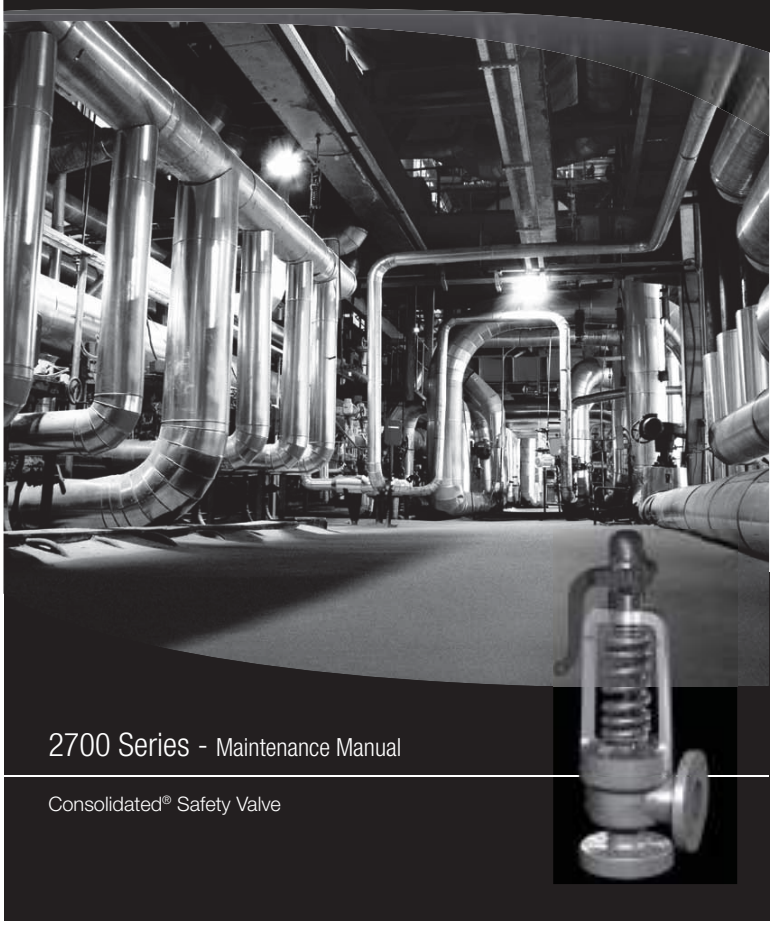

2700 Series - Maintenance Manual

Consolidated® Safety Valve

Conversion Table

All the USCS values in the Manual is converted to Metric values using following conversion factors:

USCS Unit	Conversion Factor	Metric Unit[1]
in.	25.4	mm
lb.	0.4535924	kg
in^2	6.4516	cm^2
ft^3/min	0.02831685	m^3/min
gal/min	3.785412	L/min
lb/hr	0.4535924	kg/hr
psig	0.06894757	barg
ft lb	1.3558181	Nm
°F	5/9 (°F-32)	°C

Note 1: Multiply USCS value with Conversion Factor to get Metric value.

NOTICE

For valve configurations not listed in this manual, please contact your local Greentag™ Center for assistance.

Table of Contents

Section	Subject	Page No
I.	Product Safety Sign and Label System	4
II.	Safety Alerts	5
III.	Safety Notice	6
IV.	Warranty Information	7
V.	Valve Terminology	7
VI.	Handling and Storage	9
VII.	Introduction	9
VIII.	**Consolidated Safety Relief Valve Type 2700**	10
	A. Flanged Inlet	10
	B. Buttweld Inlet	10
IX.	Operating Principles	12
X.	**Recommended Installation Practices**	13
	A. General Requirements	13
	B. Outdoor Safety Valve Installation	17
	C. Indoor Safety Valve Installation	17
XI.	**Disassembly of 2700 Series Safety Valve**	18
	A. General Information	18
	B. Specific Steps	18
XII.	**Inspection and Part Replacement**	20
	A. General	20
	B. Specific Components	20
XIII.	**Re-Assembly of 2700 Series Safety Valves**	25
	A. General Information	25
	B. Specific Steps	25
XIV.	**Setting and Testing**	28
	A. General Information	28
	B. Application of Test Gags	28
	C. Presetting Adjusting Rings	29
	D. Steam Testing Instruction	30
	E. Hydroset/Electronic Valve Testing (EVT)	33
	F. Hydrostatic Test Plug Removal-Domestic & Export	33
	F.1 General Information	33
	F.2 Domestic Plugs	34
	F.3 Export Plugs	36
XV.	Trouble Shooting the Type 2700 Valve	37
XVI.	Maintenance Tools & Supplies	38
XVII.	**Replacement Parts Planning**	39
	A. Basic Guidelines	39
	B. Identification and Ordering Essentials	39
XVIII.	Genuine Dresser Parts	40
XIX.	**Manufacturer's Field Service & Repair Program**	41
	A. Factory Setting vs. Field Setting	41
	B. Field Service	41
	C. Factory Repair Facilities	41
	D. Safety Valve Maintenance Training	41
Sales Office Locations		42

I. Product Safety Sign and Label System

If and when required, appropriate safety labels have been included in the rectangular margin blocks throughout this manual. Safety labels are vertically oriented rectangles as shown in the representative examples (left and below), consisting of three panels encircled by a narrow boarder. The panels can contain four messages

Which communicate:

- The level of hazard seriousness.
- The nature of the hazard.
- The consequence of human, or product, interaction with the hazard.
- The instructions, if necessary, on how to avoid the hazard..

The top panel of the format contains a signal word (DANGER, WARNING, CAUTION or ATTENTION) which communicates the level of hazard seriousness.

The center panel contains a pictorial which communicates the nature of the hazard, and the possible consequence of human or product interaction with the hazard. In some instances of human hazards the pictorial may, instead, depict what preventive measures to take, such as wearing protective equipment.

The bottom panel may contain an instruction message on how to avoid the hazard. In the case of human hazard, this message may also contain a more precise definition of the hazard, and the consequences of human interaction with the hazard, than can be communicated solely by the pictorial.

① **DANGER — Immediate hazards which WILL result in severe personal injury or death.**

② **WARNING — Hazards or unsafe practices which COULD result in severe personal injury or death.**

③ **CAUTION — Hazards or unsafe practices which COULD result in minor personal injury.**

④ **ATTENTION — Hazards or unsafe practices which COULD result in product or property damage**

①

Do not remove bolts if pressure in line, as this will result in severe personal injury or death.

②

Know all valve exhaust/ leakage points to avoid possible severe personal injury or death.

③

Wear necessary protective equipment to prevent possible injury

④

Do not drop or strike.

II. Safety Alerts

Improper use or repair of pressurized media or steam device may result in severe personal injury or death.

Heed all container label warnings.

Provide and use guarding to prevent contact with heated and/or pressurized parts.

Do not work with valves while under the influence of intoxicants or narcotics.

All potential hazards may not be covered in this manual.

Improper tools or improper use of right tools could result in personal injury or product damage.

Read – Understand – Practice

Warning Alerts

- Allow the system to cool to room temperature before cleaning, servicing or repairing the system. Hot components or fluids can cause severe personal injury or death.
- Always read and comply with safety labels on all containers. Do not remove or deface the container labels. Improper handling or misuse could result in severe personal injury or death.
- Never use pressurized fluids/gas/air to clean clothing or body parts. Never use body parts to check for leaks or flow rates or areas. Pressurized fluids/gas/air injected into or near the body can cause severe personal injury or death.
- It is the responsibility of the owner to specify and provide guarding to protect persons from pressurized or heated parts. Contact with pressurized or heated parts can result in severe personal injury or death.
- Do not allow anyone under the influence of intoxicants or narcotics to work on or around pressurized systems. Workers under the influence of intoxicants or narcotics are a hazard both to themselves and other employees and can cause severe personal injury or death to themselves or others.
- Incorrect service and repair could result in product or property damage or severe personal injury or death.
- These WARNINGS are as complete as possible but not all-inclusive. Dresser cannot know all conceivable service methods nor evaluate all potential hazards.
- Use of improper tools or improper use of right tools could result in personal injury or product or property damage.
- This valve product line is not intended for radioactive nuclear applications. Some valve products manufactured by Dresser Consolidated® may be used in radioactive environments. Consequently, prior to starting any operation in a radioactive environment, the proper "health physics" procedures should be followed, if applicable.

II. Safety Alerts (Contd.)

Caution Alerts

- Heed all service manual warnings. Read installation instructions before installing valve(s).
- Wear hearing protection when testing or operating valves.
- Wear appropriate eye and clothing protection.
- Wear protective breathing apparatus to protect against toxic media.

Note: Any service questions not covered in this manual should be referred to Dresser's Service Department, Phone (318) 640-6055.

III. Safety Notice

Proper installation and start-up is essential to the safe and reliable operation of all valve products. The relevant procedures recommended by Dresser Consolidated®, and described in these instructions, are effective methods of performing the required tasks.

It is important to note that these instructions contain various "safety messages" which should be carefully read in order to minimize the risk of personal injury, or the possibility that improper procedures will be followed which may damage the involved Dresser Consolidated® product, or render it unsafe. It is also important to understand that these "safety messages" are not exhaustive. Dresser Consolidated® can not possibly know, evaluate, and advise any customer of all of the conceivable ways in which tasks might be performed, or of the possible hazardous consequences of each way. Consequently, Dresser Consolidated® has not undertaken any such broad evaluation and, thus, anyone who uses a procedure and/or tool, which is not recommended by Dresser Consolidated®, or deviates from Dresser Consolidated® recommendations, must be thoroughly satisfied that neither personal safety, nor valve safety, will be jeopardized by the method and/or tools selected. Contact Dresser Consolidated® at (318) 640-6055 if there are any questions relative to tools/methods.

The installation and start-up of valves and/or valve products may involve proximity to fluids at extremely high pressure and/or temperature. Consequently, every precaution should be taken to prevent injury to personnel during the performance of any procedure. These precautions should consist of, but are not limited to, ear drum protection, eye protection, and the use of protective clothing, (i.e., gloves, etc.) when personnel are in, or around, a valve work area. Due to the various circumstances and conditions in which these operations may be performed on Dresser Consolidated® products, and the possible hazardous consequences of each way, Dresser Consolidated® can not possibly evaluate all conditions that might injure personnel or equipment. Nevertheless, Dresser Consolidated® does offer certain Safety Alerts, listed in Section II, for customer information only.

It is the responsibility of the purchaser or user of Dresser Consolidated® valves/equipment to adequately train all personnel who will be working with the involved valves/equipment. For more information on training schedules, call 318/640-6054. Further, prior to working with the involved valves/equipment, personnel who are to perform such work should become thoroughly familiar with the contents of these instructions. Additional copies of these instructions can be purchased, at a minimal cost, by contacting Dresser Consolidated® (in writing) at P.O. Box 1430, Alexandria, LA 71309-1430, or by calling at 318/ 640-2250, Fax (318) 640-6325.

IV. Warranty Information

Warranty Statement - Dresser warrants that its products and work will meet all applicable specification and other specific product and work requirements (including those of performance), if any, and will be free from defects in material and workmanship.

Defective and nonconforming items must be held for Dresser's inspection and returned to the original F.O.B. point upon request.

Incorrect Selection or Misapplication of Products - Dresser Consolidated® cannot be responsible for customer's incorrect selection or misapplication of our products.

Unauthorized Repair Work - Dresser Consolidated® has not authorized any non-Dresser affiliated repair companies, contractors or individuals to perform warranty repair service on new products or field repaired products of its manufacture. Therefore, customers contracting such repair services from unauthorized sources must do so at their own risk.

Unauthorized Removal of Seals - All new valves and valves repaired in the field by Dresser Field Service are sealed to assure the customer of our guarantee against defective workmanship. Unauthorized removal and/or breakage of this seal will negate our warranty.

**Refer to Dresser's Standard Terms of Sale for complete details on warranty and limitation of remedy and liability.*

V. Valve Terminology

- Accumulation

  Accumulation is the pressure increase over the maximum allowable working pressure of the vessel during discharge through the pressure relief valve, expressed as a percentage of that pressure, or actual pressure units.

- Back Pressure

  Back pressure is the pressure on the discharge side of a safety relief valve:

  1. Superimposed Back Pressure

     Superimposed back pressure is the pressure in the discharge header before the safety relief valve opens.

     a) Constant-Specify single constant back pressure (e.g., 20 psig (1.38 barg)).

     b) Variable-Specify variable back pressure range using min. and max. limits (e.g., 0 to 20 psig (1.38 barg)).

  2. Built-up Back Pressure

     Built-up back pressure is pressure which develops at the valve outlet as a result of flow, after the safety relief valve has been opened.

- Blowdown

  Blowdown is the difference between set pressure and reseating pressure of a pressure relief valve, expressed as a percentage of the set pressure, or actual pressure units.

V. Valves Terminology (Contd.)

- Cold Differential Set Pressure

  Cold differential set pressure is the pressure at which the valve is adjusted to open on the test stand. This pressure includes the corrections for back pressure and/or temperature service conditions.

- Chatter

  Chatter is abnormal, rapid reciprocating motion of the moveable parts of a safety valve, in which the disc contacts the seat.

- Differential Between Operating and Set Pressures

  Valves in process service will generally give best results if the operating pressure does not exceed 90% of the set pressure. However, on pump and compressor discharge lines, the differential required between the operating and set pressures may be greater because of pressure pulsations coming from a reciprocating piston. It is recommended that the valve be set as high above the operating pressure as possible.

- Disc

  A disc is the pressure containing moveable member of a safety valve which effects closure.

- Leak Test Pressure

  Leak test pressure is the specified inlet static pressure at which a quantitative seat leakage test is performed in accordance with a standard procedure.

- Lift

  Lift is the actual travel of the disc away from the closed position when a valve is relieving.

- Lifting Lever

  A lifting lever is a device for manually opening a safety valve, by the application of external force to lessen the spring loading which holds the valve closed.

- Maximum Allowable Working Pressure

  Maximum allowable working pressure is the maximum gauge pressure permissible in a vessel at a designated temperature. A vessel may not be operated above this pressure, or its equivalent, at any metal temperature other than that used in its design. Consequently, for that metal temperature, it is the highest pressure at which the primary pressure safety relief valve is set to open.

- Nozzle/Seat Bushing

  A nozzle is the pressure containing element which constitutes the inlet flow passage and includes the fixed portion of the seat closure.

- Operating Pressure

  The operating pressure is the gauge pressure to which the vessel is normally subjected in service. A suitable margin is provided between operating pressure and maximum allowable working pressure. For assured safe operation, the operating pressure should be at least 10% under the maximum allowable working pressure or 5 psi (0.34 barg), whichever is greater.

- Overpressure

  Overpressure is a pressure increase over the set pressure of the primary relieving device. Overpressure is similar to accumulation when the relieving device is set at the maximum allowable working pressure of the vessel. Normally, overpressure is expressed as a percentage of set pressure.

- Rated Capacity

  Rated capacity is the percentage of measured flow at an authorized percent overpressure permitted by the applicable code. Rated capacity is generally expressed in pounds per hour (lb/hr) for vapors; standard cubic feet per minute (SCFM) or m^3/min for gases; and in gallons per minute (GPM) for liquids.

- Relief Valve

  A relief valve is an automatic pressure-relieving device, actuated by static pressure upstream from the valve, a relief valve is used primarily for liquid service.

- Safety Relief Valve

  A safety relief valve is an automatic pressure-relieving device which may be used as either a safety or relief valve, depending upon application. A safety relief valve is used to protect personnel and equipment by preventing excessive overpressure.

- Safety Valve

  A safety valve is an automatic pressure-relieving device actuated by the static pressure upstream of the valve, and characterized by rapid opening or pop action. It is used for steam, gas or vapor service.

- Seat

  A seat is the pressure containing contact between the fixed and moving portions of the pressure containing elements of a valve.

- Set Pressure

  Set pressure is the gauge pressure at the valve inlet, for which the relief valve has been adjusted to open under service conditions. In liquid service, set pressure is determined by the inlet pressure at which the valve

V. Valves Terminology (Contd.)

starts to discharge. In gas or vapor service, the set pressure is determined by the inlet pressure at which the valve pops.

- Simmer

  Simmer is characterized by the audible passage of a gas or vapor across the seating surfaces just prior to "pop". The difference between this "start to open pressure" and the set pressure is simmer, and is generally expressed as a percentage of set pressure.

- Valve Trim

  Valve trim includes the nozzle and disc.

VI. Handling and Storage

Safety valves should be stored in a dry environment to protect them from the weather. They should not be removed from the skids or crates until immediately prior to installation. Flange protectors and sealing plugs should remain installed until just prior to installation.

Safety valves, either crated or uncrated, should never be subjected to sharp impact. This would be most likely to occur by bumping or dropping during loading or unloading from a truck or while moving with a power conveyor, such as a fork lift truck. The valve, either crated or uncrated, should always be kept with the inlet down (i.e., never laid on its side), to prevent misalignment and damage to internals. Even crated valves should always be lifted with the inlet down.

Uncrated valves should be moved or hoisted by wrapping a chain or sling, around the discharge neck, then around the upper yoke structure, in such manner as will insure that the valve is in vertical position during lift, (i.e., not lifted in horizontal position). Never lift the full weight of the valve by the lifting lever. Never hook to the spring to lift. When safety valves are uncrated and the flange protectors removed, prior to installation, meticulous care should be exercised to prevent dirt from entering the outlet port while bolting in place.

While hoisting to the installation, care should be exercised to prevent bumping the valve against steel structures and other objects.

VII. Introduction

The "safety valve" is the final safeguard between a controlled boiler and a catastrophic explosion. In an over-pressure situation, the pressure in the valve inlet increases until the force on the disc exerted by the system pressure equals the force exerted by the spring. This causes the safety valve to pop, or lift, relieving the excess steam until the system pressure is reduced to the desired level.

The Consolidated Safety Valve has been a leader in the industry since 1879, thus offering over a century of experience in design, engineering and product manufacturing. Dresser's history of dependable and reliable valve service assures that today's products and designs are consistent with industry's current requirements. Rigid manufacturing standards controlled by an ASME approved Quality Control Program insure that each valve will be manufactured in accordance with established design criteria and tested for functional performance. This quality controlled manufacturing and test program assures that each valve manufactured will provide long and reliable service.

VIII. Consolidated Safety Relief Valve Type 2700

A. Flanged Inlet

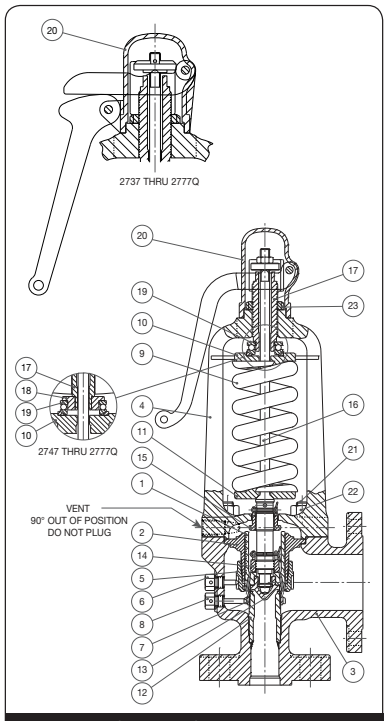

Figure 1: 2700 Safety Valve Construction - Flanged Inlet

Part No.	Nomenclature
1	Disc Holder
2	Guide
3	Base
4	Yoke
5	Upper Adjusting Ring
6	Upper Adjusting Ring Pin
7	Lower Adjusting Ring
8	Lower Adjusting Ring Pin
9	Spring
10	Top Spring Washer
11	Bottom Spring Washer
12	Seat Bushing
13	Disc
14	Disc Collar
15	Lift Stop
16	Spindle
17	Compression Screw
18	Compression Screw Adaptor (4 to 7_Q Orifices Only)
19	Thrust Bearing
20	Lifting Gear
21	Studs (Studded Inlet)
22	Nuts
23	Compression Screw Locknut
24	Cotter Pins (Not Shown)

VIII. (Contd.)

B. Buttweld Inlet

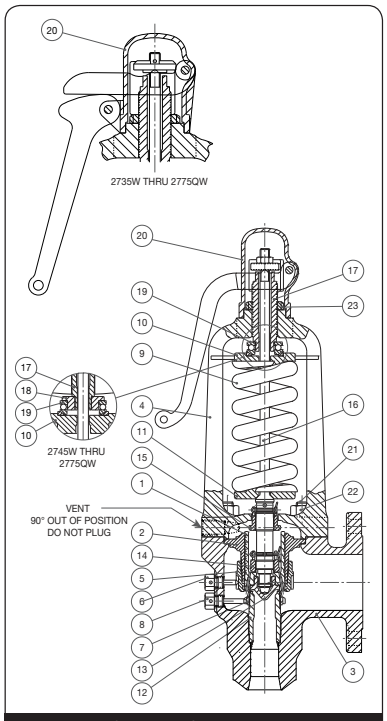

Figure 2: 2700 Safety Valve Construction - Buttweld Inlet

Part No.	Nomenclature
1	Disc Holder
2	Guide
3	Base
4	Yoke
5	Upper Adjusting Ring
6	Upper Adjusting Ring Pin
7	Lower Adjusting Ring
8	Lower Adjusting Ring Pin
9	Spring
10	Top Spring Washer
11	Bottom Spring Washer
12	Seat Bushing
13	Disc
14	Disc Collar
15	Lift Stop
16	Spindle
17	Compression Screw
18	Compression Screw Adaptor (4 to 7_Q Orifices Only)
19	Thrust Bearing
20	Lifting Gear
21	Studs (Studded Inlet)
22	Nuts
23	Compression Screw Locknut
24	Cotter Pins (Not Shown)

IX. Operation Principles

The 2700 Safety Valve operates on the principle that when steam pressure at the valve inlet, acting over the area of the disc seat (C) and bushing seat (A), generates a force that approaches that produced by the spring, the valve opens. Minimal leakage into the volume generated by the lower adjusting ring (B) causes additional force over a larger area acting on the disc holder (E), causing the valve to "pop" open. Proper adjustment of the upper adjusting ring allows the disc to go into full lift at overpressure. When full lift is attained, lift stop (H) rests against the yoke to prevent hunting, thus adding stability.

When the inlet pressure drops to the desired closing pressure, the disc (C) moves downward, causing the valve to close. The arrangement of the disc and its complement of parts, that is disc holder (E), spindle (G), disc collar (F), and lift stop (H), allow the disc to seek its natural position for tight closure. The Thermoflex™ Disc design, by allowing for the rapid equalization of temperature around the valve seat, provides a degree of tightness far above that offered by competitive valves.

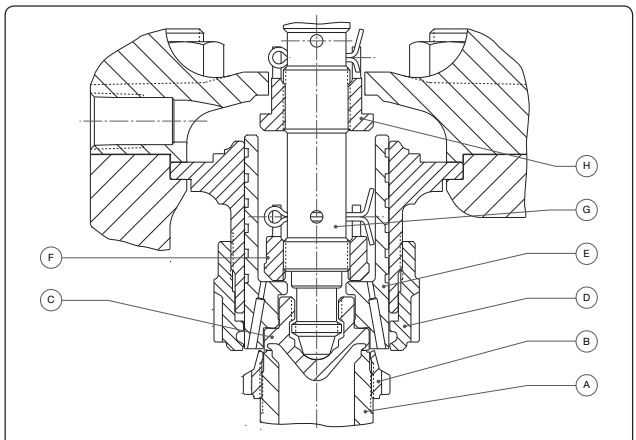

Figure 3: Valve Operation

X. Recommended Installation Practices

A. General Requirements

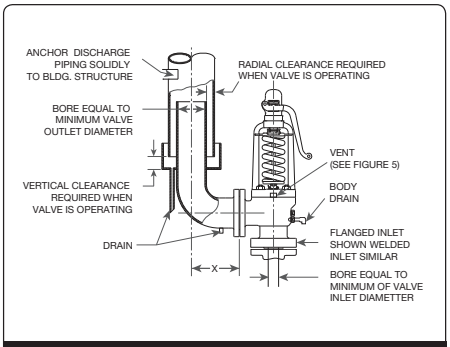

Figure 4: 2700 Valve Installation

Table 1: Maximum Dimension

Inlet Size		Class	'X' max	
in.	mm		in.	mm
3.00	76.2	150	7.250	184.15
6.00	152.4	150	12.500	317.50
8.00	203.2	150	16.000	406.40
3.00	76.2	300	7.625	193.68
6.00	152.4	300	12.875	327.03
8.00	203.2	300	16.375	415.93

The valve should be installed to meet all the requirements of Figure 4.

The safety valve shall be connected to the header independent of any other connection, and attached as close as possible to the header, without any unnecessary intervening pipe or fitting. "Necessary" intervening pipe or fittings shall not be longer than the face-to-face dimension of the corresponding tee fitting of the same diameter and pressure, per ANSI/ASME Standards.

No valve of any description should be placed between the safety valve and the header, nor on the discharge pipe between the safety valve and the atmosphere.

In no case may the inlet piping to the valve have a flow area less than the area of the valve inlet.

Excessive pressure loss at the inlet of the safety valve will cause extremely rapid opening and closing of the valve, which is known as "chattering". Chattering may result in lowered capacity as well as damage to the seating surface of the valve. Severe chattering can cause damage to other parts of the valve.

The following recommendations will assist in eliminating the factors that produce chatter:

1. The downstream corner of the header nozzle must be rounded to a radius of not less than .250" (6.35 mm) of the opening diameter. (See Figure 5)

2. Pressure drop due to friction flow to the inlet of the valve should not be greater than 50% of the expected blowdown of the safety valve.

To decrease the effects of a phenomenon known as "sonic vibrations," or "flow induced vibrations", the following recommendations are made:

1. Safety valves should be installed at least eight to ten pipe diameters downstream from any bend in a

X. Recommended Installation Practices (Contd.)

steam line. This distance should be increased when the valve is installed on the horizontal section of a header which is preceded by an upward section.

2. Safety valves should not be installed closer than eight to ten pipe diameters either upstream or downstream from a diverging, or a converging, "Y".

3. In cases where a piping configuration renders the above two recommendations impractical, or impossible, the downstream corner of the header nozzle inlet should be rounded to a greater extent than the upstream corner. The header nozzle entrance should be rounded so the radius at the downstream corner will be equal to a minimum of 1/4 of the nozzle diameter. The radius should be reduced gradually, leaving only a small portion of the upstream corner with a smaller radius. (See Figure 5)

4. Safety valves should never be installed, in a steam line, in a position directly opposite to a branch line.

Excessive line vibrations are known to produce shifts in safety valve set pressures. Vibrations may possibly introduce chatter, causing damage to the valve and reduce its capacity. This vibration also contributes to increased incidents of seat leakage. Considerations should be given to eliminating this problem prior to installing the valve on the unit.

Table 2: 2700 Yoke Vent Sizes

Orifice Designation	Yoke Vent Size (NPT)	
	in.	mm
1	.50	12.7
2	.50	12.7
3	.50	12.7
5[1]	.75	19.0
4[1]	.75	19.0
6	1.00	25.4
7Q	1.00	25.4

Note 1: #5 is a smaller orifice than #4

Steam flowing vertically out of a discharge elbow produces a downward reaction on the elbow. Effects of reaction force, vibration, and seismic loads, on all valve components and discharge piping, should be considered when designing the valve system. Refer to ANSI B.31.1, Non-Mandatory Appendix II, Dresser Product Information Sheet SV/PI-15, and Dresser Bulletin SV-5 for further information.

For optimum performance, safety valves must be serviced regularly and otherwise maintained. So that servicing can be properly performed, valves should be located in a manner that allows for easy access. Sufficient working space should be provided around and above the valve to permit access to adjusting rings. If two or more valves are

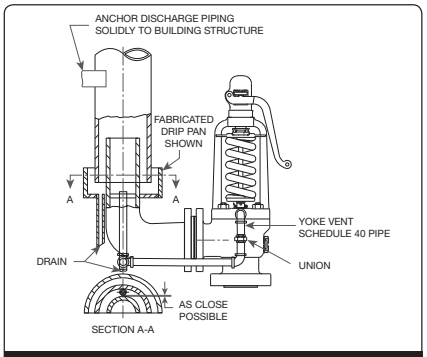

Figure 5: Valve Installation

X. Recommended Installation Practices (Contd.)

located close together, the outlets should be parallel so as to offer as much protection as possible to personnel repairing, or working close to, the safety valve.

Because foreign material passing into, and through, a safety valve is damaging, the system on which the valve is installed must also be inspected and cleaned. New systems are prone to contain welding beads, pipe scale, and other foreign materials which are inadvertently trapped during construction, and destroy the valve seating surfaces the first few times the valve opens.

With regard to weld-end inlet valves, completely assembled valves may be installed without disassembly being necessary at the time of welding. During welding, the valve neck should be insulated to reduce thermal stresses. When stress relieving, insulation should also be utilized to reduce thermal stresses. In service, the valve neck should be insulated at least to the point of the inlet neck/valve body-bowl juncture.

Safety valves should be installed in a vertical position. Nominal tolerance on vertical installation is plus or minus 1 degree.

The discharge area of the outlet piping from a safety valve should not be less than the area of the outlet connection. Where more than one safety valve is connected to a common outlet pipe, the area of the pipe should not be less than the combined area of the outlet connections to the safety valves.

All safety valve discharges should be piped so that the effluent is discharged clear from walkways or platforms. Ample provision for gravity drain should be made in the discharge pipe at, or near, each safety valve where water or condensation, may collect. Each valve has an open gravity drain through the body, below the level of the valve seat, and this drain should be piped to a safe discharge area.

If a silencer is used on a safety valve, it should have sufficient outlet area to prevent back pressure from interfering with the proper operation and discharge capacity of the valve. The silencer or other piping components should be constructed so as to avoid the possibility of creating corrosion deposit restrictions in the steam passages.

Exhausts, drains, and vents must be installed so that they will not impose undue stresses on the safety valve. Any such stresses can produce body distortion and leakage. Therefore, the following recommendations are provided:

1. Discharge piping should not be supported by the valve. The maximum weight on the outlet of the valve should not exceed the weight of a flange and short radius elbow, plus a twelve (12) inch (304.8 mm) straight length of standard weight thickness pipe (with drip pan).

2. Clearance between the valve exhaust piping and the discharge stack should be sufficient to prevent contact when considering thermal expansion of the header, valve, and discharge stack. Movements due to vibration, temperature changes, and valve reaction forces should also be considered, to ensure adequate clearance between the exhaust piping and the discharge stack.

3. Flexible metal hoses are not generally recommended, but if used to connect valve outlets to discharge stacks, they must be of sufficient length, and be configured/installed in such a manner, that they will not become "solid" in any one position. Better results are obtained if the hoses are installed so that they will permit movement by bending, rather than by stretching and compressing along their length.

The yoke can be vented to the atmosphere as in Figure 4. **Precautions should be taken to vent the yoke in such a manner that it will exhaust into a safe area to prevent injury to personnel near the valve. The yoke vent piping must not be connected to the body drain piping.**

Do not plug the yoke vent hole or reduce vent hole pipe size, (Reference Table 2), as this could lead to valve malfunction and damage.

Precautions should be taken to prevent accumulations of foreign material or water in the vent pipe. This vent is a critical part of the valve system for controlling valve blowdown and lift.

All face surfaces which require gaskets, to seal pressure, shall be inspected for cleanliness, or any defects that can cause leakage. Burrs, mashed serrations, uneven surfaces, etc., are all possible leakage producing defects. Proper gasket sizes and pressure ratings should be checked prior to starting valve installation.

It is of utmost importance that the gaskets used be dimensionally correct for the specific flange, and that they fully clear the valve inlet and outlet openings. Gaskets, flange facings, and bolting should meet the service requirements for the pressure and temperature involved. Other valve installation considerations include:

1. Install the inlet gasket, if required, on the header mounting flange. Check for cleanliness, surface alignment condition, gasket condition, etc. When possible, inlet studs on the mounting flange should be used to guide the valve on the header mounting flange. Inlet studs should be lubricated with the appropriate lubricant.

X. Recommended Installation Practices (Contd.)

2. When installing flanged valves, the flange bolts must be pulled down evenly to prevent body distortion, misalignment, and leakage.

3. With valve in position, screw on the stud nuts until all nuts are finger tight. An initial torque shall be placed, in turn, on each stud nut. Increase the torque progressively until the final torque is applied. Upon completion, recheck each stud nut's torque. Required torque will vary with bolting material and gaskets used. See your company engineering or specification department for details on torquing sequence and torque values. As an extra precaution, the gap between the two mating flanges should be checked during the torquing process to ensure that the flanges are being pulled together evenly. A final inspection and review should be made to ensure that all of the requirements for bolting the valve inlet have been implemented.

4. The outlet piping may now be installed. A complete inspection of components and their cleanliness is to be made prior to further work. Studs are to be lubricated with an appropriate lubricant.

5. Install the outlet gasket, studs and nuts. Stud nuts are to be pulled down finger tight. An initial value of torque is to be applied. The additional procedures outlined, in Step 3 are also to be followed.

After being assured that the valve is properly installed, the drainage piping from the valve body-bowl is to be connected. This line also must be flexible, so it will not create stress on the valve under operating conditions.

Prior to completing the installation, a visual check should be made to ensure that the valve lifting lever has room and is free to operate.

At the time of installation, an inspection of the valve should be made to confirm that all adjustment components (i.e., ring pins, cap, etc.) are properly locked and sealed, as required by the ASME Code.

For operational hydrostatic tests at the valve inlet, which do not exceed valve set pressure, the valve should be gagged. Refer to the final "Field Testing" portion of this manual for proper techniques. Ensure that the gag is removed upon completion of the inlet hydrostatic test.

Prior to startup of the unit on steam, the sections of this manual which specify requirements for set pressure testing should be reviewed. For conditions where the valve is subjected to high steam pressures (i.e., those exceeding normal operating conditions), preparations should be made to gag the valves. These preparations should then be cleared with the boiler manufacturer and Dresser Consolidated® Engineering. Refer to Section XIV. B.3 of this manual for the proper gagging techniques.

The safety valve should be tested with full steam pressure to ensure that the safety valve installation has been properly accomplished. In some cases this is not practical, thus the use of the Consolidated® Hydroset, or the Electronic Valve Tester (EVT), should be considered. For valves being tested for set pressure by using a Hydroset or EVT, only the set pressure is being verified. Other factors such as blowdown, lift, reaction force, proper discharge stack sizes and effects of thermal expansion cannot be determined, using these setting devices. Full flow steam testing is recommended at initial start-up to adjust blowdown and verify proper installation. Proper adjusting ring position can then be recorded and maintained when valves are serviced.

Vent and drain piping should have a union connection to facilitate valve removal or servicing in place. (See Figure 4)

X. Recommended Installation Practices (Contd.)

B. Outdoor Safety Valve Installation

Safety valves operating under the best possible conditions (i.e., of favorable operating gap, relatively stable ambient temperatures, the absence of dirt and in relatively still air) will provide the maximum degree of safety, tightness and dependability.

When a safety valve is installed in an outdoor location, it may be exposed to wind, rain, snow, ice, dirt and varying temperatures. Therefore, the following recommendations are made for proper protection, and to ensure that operational dependability can be restored to a level near that of the valve installed under ideal conditions:

The inlet neck of the safety valve and safety valve body, up to the top of the base, should be insulated. The exterior surface of any such insulation should be made weather-proof by any suitable means. In addition to maintaining a more even temperature within the valve body, especially during widely fluctuating ambient temperatures, this insulation will effectively reduce thermal stresses, due to high temperature gradients, through the walls of the safety valve nozzle.

Spring covers should be used to stabilize (as nearly as possible) the temperature of the spring, to prevent the accumulation of snow and ice between the coils of the spring, and to prevent dirt and fly ash from accumulating between the coils of the spring.

Lifting gear covers should be installed to prevent ice, dirt and fly ash from accumulating in areas inside the safety valve cap.

C. Indoor Safety Valve Installation

Indoor valve installations should have inlet necks insulated only up to the underside of the valve body. Considerations should be given to ambient temperature changes greater than 100°F (37.8°C), because of possible set point changes which may occur.

XI. Disassembly of 2700 Series Safety Valve

A. General Information

The Type 2700 Safety Valve can be easily disassembled for inspection, reconditioning seats or replacing internal parts. The initial spring load can be established after reassembly. (Refer to Figure 1 and 2 for parts nomenclature).

NOTES:

- Before starting to disassemble the valve, be sure that there is no steam pressure in the drum or header.
- Parts from one valve should not be interchanged with parts from another valve.

B. Specific Steps

1. Remove the top lever pin and top lever.
2. Loosen cap set screw and lift off cap and drop lever assembly.
3. Remove the cotter pin which retains the release nut, and then remove the release nut.
4. Refer to Figure 6, and measure and record Dimension A, as this information will be required to correctly re-assemble the valve.
5. Loosen the compression screw locknut and the compression screw, to remove tension from the spring.
6. Loosen and remove the yoke stud nuts.

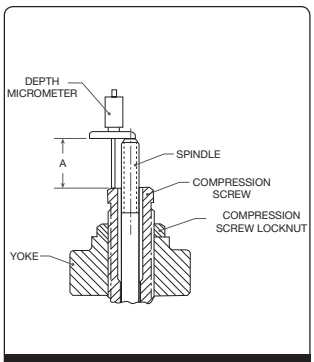

Figure 6: Yoke Disassembly

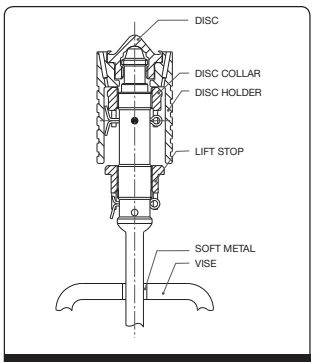

Figure 7: Spindle Disassembly

XI. Disassembly of 2700 Series Safety Valve (Contd.)

7. Carefully lift the yoke and spring assembly over the spindle, and away from the valve.
8. Remove the thrust bearing assembly and the spring washer assembly. Mark the spring to indicate the top of the spring, as this formation will be used in reassembly.
9. Remove the spindle, disc and disc holder assembly from the valve by lifting the spindle. Take care to ensure that the disc seating surface is not damaged from improper handling.
10. To remove the disc and disc holder from the spindle, first insert the spindle into a vise (see Figure 7) being careful not to damage the threaded end of the spindle. Then, lift up on the disc holder and turn the disc/disc holder counterclockwise to engage the "drop-thru" threads. Once the threads are engaged, release the disc holder and continue to unthread and remove the disc. After the disc is removed, lift disc holder from the spindle.

Note: Removal of the lift stop and/or the disc collar from the spindle is usually unnecessary, unless the spindle is to be replaced.

11. Measure from the top of the guide to the bushing seat (Dimension B, Figure 8) with a depth micrometer or other suitable measuring device. Record Dimension B.
12. Place a scale or other thin flat metal surface against the lower face of the upper adjusting ring and measure from the top of the guide to the face of the upper adjusting ring (Dimension C, Figure 8). Record Dimension C.
13. Remove the upper adjusting ring pin from the valve base.
14. Loosen the lower adjusting pin until the pin is slightly clear of the notches in the lower adjusting ring. Being careful not to move the lower adjusting ring, place a ring lap on top of the bushing seat. (See Figure 9). Then, using the ring pin as a "pointer", or reference point, rotate the lower adjusting ring counterclockwise and count the number of notches that pass in front of the "pointer" until contact is made with the ring lap. Record this information, as it will be required to correctly reassemble the valve.
15. Remove both the lower adjusting ring pin and the lower adjusting ring from the valve base.
16. The valve is now ready to be cleaned and the parts inspected for proper size and condition.

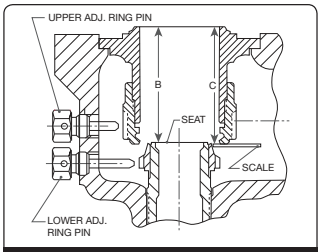

Figure 8: Bushing Seat

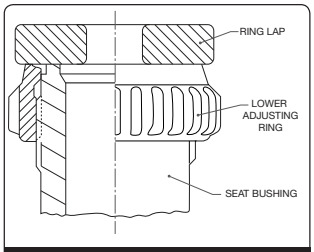

Figure 9: Placing a Ring Lap on Top of the Seat Bushing

XII. Inspection and Part Replacement

A. General

Once the valve is disassembled, appropriate parts can be inspected for damage and their suitability for reuse.

B. Specific Components

1. Lift Lever and Cap Assembly

Visually inspect the lift lever and cap assembly for damage from improper handling or severe corrosion. Components should be replaced if damage interferes with proper function or manual lifting of the valve.

2. Compression Screw and Locknut

The compression screw must be replaced if the threads are damaged to the point that spring adjustment is affected. The wrench flats should not be worn or rounded or distorted due to the improper use of an adjusting wrench on either the compression screw or locknut. The spring washer bearing surface or compression screw adapter surface, (5 through Q orifice only), should not be pitted or torn and should have a 32 RMS finish.

3. Thrust Bearing

The aligning washer must match evenly to the lower thrust bearing spherical surface, such that full face contact is achieved between the parts. Therefore, grind together, or replace the entire thrust bearing, as necessary.

4. Top and Bottom Spring Washers

The lower spring washer bearing surface must be ground to the spindle. To grind the lower spring washer, a 320 grit (Clover 1A) lapping compound is used for roughing-in, and then finish lap with 1000 grit Kwik-Ak-Shun lapping compound until a satisfactory bearing band is obtained. The bearing width should be 1.800" (3.20 mm) min. to 3.160" (4.80 mm) max. Clean lower spring washer and spindle when complete.

5. Spring

Visually inspect for pitting and corrosion of coils that will reduce the coil diameter. When this condition is found, replace the spring. Inspect for end parallelism in the free height and any obvious unevenness in coils, collapse of coils or general distortion.

6. Spindle

It is important that the spindle be kept very straight in order to transmit the spring force to the disc without lateral binding. Overgagging is one of the common causes of bent spindles. A method to check the essential working surfaces of the spindle is illustrated in Figure 10. This may be performed either with or without the disc collar and lift stop on the spindle.

a. Using Figure 10 as a reference, clamp a V block (A) made of wood, fiber or other suitable material onto the platform railing. Imbed the ball end of the spindle in a piece of soft wood (B) and place the top of the Spindle, below the threads, in the V block (A). Clamp a dial indicator onto the railing and locate at point (C). The total indicator reading should not exceed .007" (0.18 mm) when the spindle is rotated. If it does, the spindle must be straightened prior to reuse.

b. To straighten the spindle, place the unthreaded portion of the small and large end in padded V blocks, with the point of maximum indicator readout upward, and then apply a downward force with a padded press or jack as required, until the spindle is within the specifications.

c. Other parts of the spindle not used as working surfaces may run out considerably more than

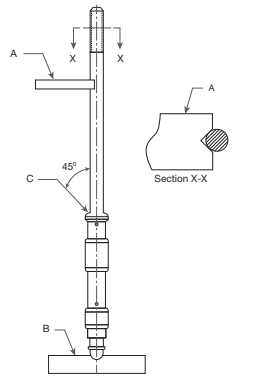

Figure 10

XII. Inspection and Part Replacement (Contd.)

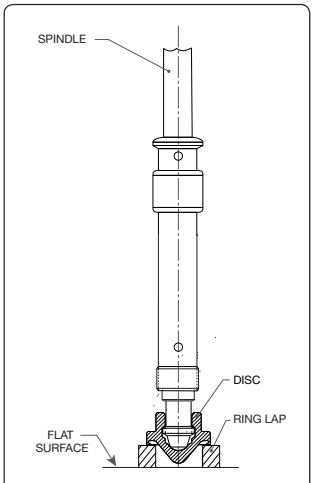

Figure 11

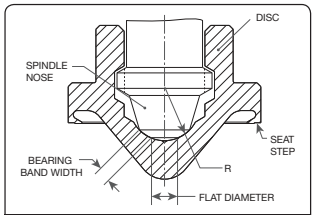

Figure 12: Disc to Spindle Lapping

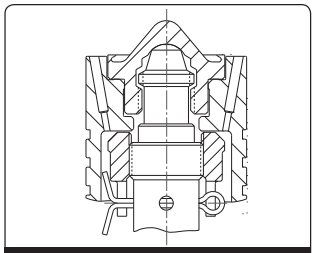

Figure 13

.007" (0.18 mm), but this should not be regarded as unacceptable. Although the upper thread end is not a working surface, excessive bending in this area could effect the accuracy of the Dresser Consolidated® Hydroset device and/or the Dresser Consolidated® Electronic Valve Tester, if either of these devices is used to verify valve set pressure.

d. Apply a small amount of lapping compound (1A) on the tip of the spindle. Install the disc - without the disc holder - onto the spindle tip, turning it clockwise until the disc threads drop out. Place a ring lap on a table, or similar flat surface, and wipe the exposed surface of the lap clean. Insert the disc nose into a ring lap, so that the seat contacts the lap surface. Oscillate the spindle using 360 degree oscillations for approximately 15 seconds, then check the spindle tip and disc "pocket" to determine progress. (See Figure 11).

e. The spindle nose should be ground into the disc pocket until the bearing is clearly marked. The band position is shown in Figure 12.

f. Place the disc holder on the spindle, allowing it to rest on the face of the disc collar as previously shown in Figure 7 on Section XI.B. Then assemble the disc holder and new disc. The disc should be free enough to rock on the spindle tip. If there is no freedom, lower the disc collar until the disc is free to rock slightly initially, approximately .001 to .002" (0.25 to .05 mm) rock. The disc collar must then be lowered two additional notches from this initial position and secured with a stainless steel cotter pin. (See Figure 13).

Note: Failure to provide the recommended disc rock at assembly will result in a leaking valve.

XII. Inspection and Part Replacement (Contd.)

Table 3: Disc to Spindle Lapping Information

Orifice	Nose Radius		Flat Diameter		Bearing Band Width	
	in.	mm	in.	mm	in.	mm
1	.277 $^{+.000}_{-.004}$	7.04 $^{+0.00}_{-0.10}$	.125	3.18	.125	3.18
2	.377 $^{+.000}_{-.004}$	9.42 $^{+0.00}_{-0.10}$	.313	7.94	.125	3.18
3, 5, 4, 6	.495 $^{+.000}_{-.005}$	12.57 $^{+0.00}_{-0.13}$	.250	6.35	.219	5.56
Q	.582 $^{+.000}_{-.005}$	14.78 $^{+0.00}_{-0.13}$	.250	6.35	.281	7.14

Table 4: Allowable Guide / Disc Holder Clearance

Orifice	Temp. Class	Maximum Clearance	
		in.	mm
#1	B D	.005 .008	0.13 0.20
#2	B D	.008 .012	0.20 0.30
#3	B D	.010 .015	0.25 0.38
#5	B D	.011 .017	0.28 0.43
#4	B D	.012 .018	0.30 0.46
#6	B D	.016 .016	0.41 0.41
#Q	B D	.025 .025	0.64 0.64

g. The desired band width for Type 2700 valves is shown in Table 3. In addition, the finished machined size of the spindle nose radius, and the flat diameter for each orifice size, are also shown in this Table. If the required bearing band cannot be obtained by hand grinding, then this radius should be checked and remachined if necessary.

h. If the band extends too high on the radius it will be difficult to rock the disc, and the disc may lock up under pressure. If the band is too narrow, the spindle may indent the disc and again the rock will be lost.

i. When the bearing area is re-established, clean both surfaces. Then apply lubricant to the spherical surface of the spindle tip, and work it into the surfaces by rotating the disc on the spindle.

7. Guide

Inspect the guide inside diameter for egging, and ensure the inside surface is smooth. The threads on the outside must be in good condition to ensure the upper ring will adjust, even when the valve is hot. If serious galling is present, the guide should be replaced.

a. Clearance — The maximum clearance between the disc holder and guide should be in accordance with Table 4.

8. Disc Holder

The surface on the end of the disc holder closest to the disc must be free from steam erosion. The two small holes must be open to ensure the passage of steam to the chamber above the disc. Make sure the outside diameter is not egg shaped and the surface is smooth. If any small indication of galling is present, polish the high spots with an emery cloth. If serious or large scale galling is present, the disc holder should be replaced.

9. Disc

Inspect the disc seat for steam cuts, nicks, or other damage. If the seat step measures less than dimensions specified in Table 5, this indicates that the thermal lip has been lapped to the minimum thickness.

Do not machine any ThermoDisc™; however, a disc which is not below minimum relief can be lapped to remove minor damage.

a. To Lap Disc Seat

(i) The above lapping method is also used on the disc seat. When lapping the disc seat, the disc should be held stationery, but not rigidly, and the lap moved as above. Use care not to strike the cone of the disc, as this would cause the seat to be high on the inside.

(ii) The ThermoDisc™ can not be machined. If, after lapping, Dimension M, in Figure 14, does not meet the minimum specified in Table 5, the disc should be replaced.

(iii) It may not be necessary to use all the laps at any one time, but having a sufficient supply on hand will save reconditioning time. The laps should be reconditioned on a flat lapping plate. A lap should not be used on more than one valve without being reconditioned. Laps must be checked for flatness prior to use, and at frequent intervals during use. A lap that is flat within one-half light band is considered satisfactory. Information on

XII. Inspection and Part Replacement (Contd.)

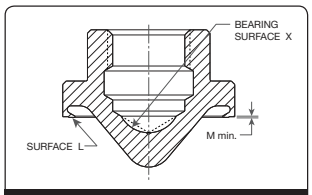

Figure 14

Table 5: Minimum Seat Relief

Orifice	M min.	
	in.	mm
#1	.004	0.10
#2	.005	0.13
#3	.006	0.15
#5	.007	0.18
#4	.008	0.20
#6	.010	0.25
#Q	.012	0.30

the Monochromatic Light and optical flat is available, upon request, from the Dresser Consolidated® Field Service Department.

(iv) To recondition a ring lap, wipe all compound from the lapping plate and ring lap, then move the ring lap in a figure-eight motion on a lapping plate. If the lap is not flat, a shadow will be apparent. To remove the shadow, coat the lapping plate with 1000 Grit Compound and lap the ring, with figure-eight motions covering the lapping plate.

10. Seat Bushing

a. A Dresser Consolidated® reseating machine should be used to recondition badly worn, out of tolerance, bushing seats. This machine can be provided by the Dresser Consolidated® Service Department, and eliminates the need to remove a valve from the unit. The machine is mounted in place of the yoke and cuts the top face, inside diameter, and outside of the bushing, to establish the correct height, angles, and diameters.

b. The use of a reseating machine is suggested for reconditioning badly worn seats, or for re-establishing Dimension E per Figure 15. Dimension E should be re-established when it is less than .010" (0.25 mm) for orifices 1, 2, 3, 5 and 4; and less than .030" (0.76 mm) for orifices 6 and Q.

c. To lap the bushing seat.

Note: If the bushing seat surface requires extensive lapping or reconditioning, a reseating machine should be used prior to lapping.

(i) Cover the seat lap face with a light coating of 1-A Clover Compound and gently place the lap on the valve bushing seat.

Note: A heavy coat of lapping compound tends to round off the edges of the seat.

(ii) Lap, using an oscillating motion in various directions, while holding the lap loosely in the fingers and allowing the weight of the lap to rest on the seat surface. Control the motion of the lap to prevent either the inside or outside edge of the lap from crossing the bushing seat surface. If either edge touches the seat surface, the seat can become scratched and/or rounded.

Note: Care should be used not to run off the seating surface with the lap, as this will cause the seat to become uneven.

(iii) Do not lap excessively with a ring lap without resurfacing on a lapping plate. Use a new ring lap, if further lapping is required, to remove

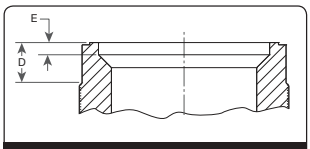

Figure 15

XII. Inspection and Part Replacement (Contd.)

any defect in the seat. To finish lapping the bushing seat, apply a light coating of #1000 Grit Compound to the face of the new lap, and repeat the lapping motion described previously.

(iv) Remove the ring lap and wipe the lap surface with a clean, lint free cloth, leaving compound on the bushing seat. Replace the ring lap on the seat and lap as above, but without adding compound. Repeat this operation until the seat has a mirror finish. Any evidence of defects, such as gray areas or scratches, will require a repeat of the whole lapping procedure until a mirror finish is attained.

(v) While the finer points of lapping and "grinding-in" may be considered as a mechanical art, it is not beyond the ability of the average mechanic to produce good seats with some practice. No effort has been made in this manual to establish an exact procedure to cover each and every case, because different persons can get the same results using their own techniques.

(vi) The following precautions and hints will be of assistance when lapping nozzle and/or disc seats:

- Two (2) ring laps per valve
- 1A Clover Grinding Compound per tool list[1]
- 1000 Grit Kwik-Ak-Shun Grinding Compound per tool list[1]
- Clean, lint free cotton rags

Note 1: This tool list is located on Section XV of this manual.

d. Before lapping the nozzle and disc seat, the leading edges (inside diameter of seats) of both must be slightly chamfered as follows:

Use a fine grade sandpaper to lightly break the inner edge and outer edge of the nozzle seat and disc seat. The purpose of this is to remove any small metal particles or fins attached to the sharp corner surfaces. Do not exceed .002" (0.05 mm) chamfer for this purpose.

e. Seat Bushing should be replaced if D dimension is below the values mentioned in Table 6.

Table 6: Seat Bushing Replacement Criteria

Orifice	D min.	
	in.	mm
#1	.125	3.18
#2	.203	5.16
#3	.250	6.35
#5	.313	7.95
#4	.313	7.95
#6	.500	12.70
#Q	.438	11.13

XIII. Re-Assembly of 2700 Series Safety Valve

A. General Information

The Type 2700 Safety Valve can be easily re-assembled after required inspection/maintenance of internal parts has been performed. All parts should be clean prior to assembly. See Section XVI for recommended compounds, lubricants, and tools.

B. Specific Steps

1. Prior to reinstalling the lower adjusting ring, lubricate the threads of the lower adjusting ring pin and partially insert the pin into the valve body. Now the pin can again serve as a "pointer", or reference point, as previously described in Section XI.B. of "Disassembly".

2. Lubricate the threads of the lower adjusting ring, and install the ring in the valve body. Then, turn the lower adjusting ring clockwise until the top of the ring clears the seat.

3. The lower adjusting ring is to be installed in the position it originally held prior to disassembly. To effect this relocation, place a clean ring lap on the nozzle seat and turn the lower adjusting ring in a counterclockwise direction until it makes contact with the ring lap. If the original location of the adjusting ring was recorded, simply lower the ring, by turning it clockwise, the same number of notches as was recorded in Step XI.B. of "Disassembly". If information on the original lower ring position is not available, the ring should be lowered, by turning it clockwise one notch for every 600 psig (20.7 barg) of set pressure. This position represents a staring position. See Note below.

Note: For a valve set pressure of 1200 psig (81.6 barg), the ring will have to be lowered two (2) notches below the bushing seat. This will be the starting position, with the final position being determined during field testing.

4. Once the lower adjusting ring is in its correct location, lock it in place by installing in the lower adjusting ring pin. Verify that the lower ring is capable of a slight movement. If the lower ring does not move, the pin is too long. Should this be the case, grind the end of the pin slightly to shorten it, while retaining the original tip contour, then reinstall the pin.

5. If the upper adjusting ring has been removed from the guide, lubricate the ring threads and re-install the ring on the guide.

6. Install the adjusting ring and guide assembly into the valve base such that the scribe marks will be visible from the valve outlet or the inspection port.

7. Measure the overall length of the upper ring and guide assembly. Adjust the upper ring to the Dimension C recorded in Step 12 of Section XI.B., Disassembly. Observe the marks made on the ring and guide and adjust the ring to align the marks. Recheck the overall length of the adjusting ring and guide assembly to assure that the upper ring is in its original position.

8. Measure from the top of the guide to the bushing seat with a depth micrometer. Subtract Dimension B as measured in Step 11, Section XI.B. of Disassembly,

Table 7: General Adjusting Ring Information

Orifice	Pressure Class	Total Number of Notches		Number of Notches Disc Holder to Seat		Vertical Ring Travel for each Notch of Adjustment			
		Lower Ring	Upper Ring	Lower Ring	Upper Ring	Lower Ring		Upper Ring	
						in.	mm	in.	mm
#1	All	18	22	7	10	.0035	0.089	.0025	0.064
#2	All	21	31	8	12	.0030	0.076	.0020	0.051
#3	All	31	41	12	16	.0020	0.051	.0015	0.038
#5	All	31	37	12	17	.0020	0.051	.0015	0.038
#4	All	31	47	12	16	.0020	0.051	.0015	0.038
#6	All	41	56	30	45	.0015	0.038	.0010	0.025
Q	All	48	62	30	45	.0015	0.038	.0010	0.025

XIII. Re-Assembly (Contd.)

from the dimension previously measured. The difference is the distance the upper adjusting ring must be lowered. Refer to Table 7 to determine the number of notches that the ring is to be lowered.

9. Once the upper adjusting ring/guide assembly is properly set, lubricate the guide seating surface in the valve base, and re-install the assembly into the base, then, lubricate the threads of the upper adjusting ring pin, and lock the ring/guide assembly in place by installing in the pin.

10. Verify that the upper ring is capable of a slight movement. If the upper ring does not move, the pin is too long. Should this be the case, grind the end of the pin to shorten it, while retaining the original tip contour, then reinstall the pin.

11. Clamp the spindle in a padded vise, with the "ball end" of the spindle upward.

12. Verify that the spindle bearing has been ground to the disc pocket, as specified in Section XII.B.6.e., of this manual.

Note: This step must be accomplished before proceeding with re-assembly.

13. If the lift stop was removed from the spindle, lubricate the threads and install the lift stop. Do not install the cotter pin at this time.

14. If the disc collar was removed, lubricate the threads and install on the spindle. Do not install the cotter pin at this time. Then, carefully lower the disc holder onto the spindle, allowing it to sit on the face of the disc collar.

15. The disc onto the spindle, ensuring that the disc is free to "rock" on the spindle tip as specified in Section XII.B.6.f., of this manual. If disc "rock" is not satisfactory, correct the cause before proceeding.

16. When disc "rock" is satisfactory, remove the disc and disc holder, and secure the disc collar with a stainless steel cotter pin. Using side cutters, carefully cut-off excess cotter pin legs, and bend the cotter pin for a neat installation.

17. Lubricate the spindle tip, and assemble the disc holder and disc to spindle. Recheck the rock.

18. Remove complete assembly from the vise, being sure to protect the disc seat surface at all times.

19. Prior to installing the spindle assembly into the valve base, wipe the disc seat with a soft, lint-free cloth. Then, carefully install the spindle assembly into the guide.

20. Lubricate the compression screw threads with "Fel-Pro Nickel Ease", and thread into the yoke. Install the lower washer on the spring and, then, install the upper washer on the spring. Lubricate the bearing assembly with "Fel-Pro Nickel Ease" and install on the upper spring washer.

21. For orifice sizes 5-Q, next place the compression screw adaptor on top of the bearing.

Table 8: Required Lift for Capacity Verification

Orifice	Capacity Lift		Required Additional Lift		Total Lift [1 & 2]		
	in.	mm	in.	mm	in.	mm	
1	.281	7.14	.020	0.51	.301	7.65	Approx. 31 Notches
2	.338	8.59	.020	0.51	.358	9.09	Approx. 36 Notches
3	.450	11.43	.030	0.76	.480	12.19	Approx. 48 Notches
5	.516	13.11	.050	1.27	.566	14.38	Approx. 62 Notches
4	.563	14.30	.040	1.02	.603	15.32	Approx. 56 Notches
6	.750	19.05	.060	1.52	.810	20.57	Approx. 81 Notches
Q	.987	25.07	.070	1.78	1.057	26.85	Approx. 106 Notches

Note 1: For full lift valves only

Note 2: Total lift tolerance is $^{+.020"}_{-.000"}$ [$^{+0.51\ mm}_{-0.00\ mm}$]. Per the ASME Section I code, the valve lift must be mechanically verified and shall meet or exceed the required lift.

XIII. Re-Assembly (Contd.)

22. Place the spring and bearing assembly into the yoke.

23. Lubricate the yoke studs with "Fel-Pro Nickel Ease". Carefully lower the yoke/spring assembly over the spindle while aligning the yoke as shown in Figure 17 of Section XIV. Ensuring that the yoke vent hole is on the side of the valve opposite the inspection port, make certain that the yoke does not bind on the lift stop. Care should then be taken to tighten down the yoke evenly, so as to prevent distortion and misalignment.

24. Raise the lift stop until it contacts the yoke. Then, lower the lift stop to achieve the proper dimension shown in Table 8, or the restricted lift identified on the valve nameplate.

Note: Do Not Deviate From Stamped Nameplate Lift.

The lift stop must be adjusted to the rated lift marked on the nameplate, plus an additional amount as indicated. The additional lift is to compensate for heated condition of the lower spindle when the valve is in operation.

Note: For all Type 2700 valves, one revolution of the lift stop equals .063" (1.59 mm) of lift. There are six (6) notches on the lift stop, so each notch of adjustment represents approximately .010" (0.25 mm) lift.

25. Secure the lift stop with a cotter pin.

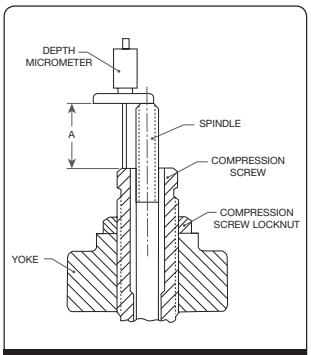

Figure 16

26. Refer to Figure 16 and establish Dimension A to that previously recorded in Section XI.B.4 of "Disassembly".

27. Ensure that the top washer arms do not remain in contact with the yoke, after each compression screw adjustment.

28. The valve is now ready for testing, after which the following steps can be taken:

    a. Following testing, the compression screw should be locked firmly in place with the lock nut.

    b. Install the release nut onto the spindle; then, thread clockwise until the release nut is fully engaged on the spindle thread and the cotter pin hole is aligned. For numbers 1, 2, 3, and 4 orifices, run the release nut down enough to allow the lock nut to fully engage, and then, loosely install the lock nut.

    c. Install the cap over the release nut, and seat the cap firmly into place on the yoke. Install the top lever in the cap and, then, insert the top lever pin through the top lever and cap holes.

    d. Adjust the release nut, until it clears top lever by .125" (3.20 mm). Remove the lever pin, top lever and cap. Next, insert a cotter pin through the release nut slots and the spindle, and spread the cotter pin ends. Re-assemble the cap with the drop lever, top lever, and top lever pin. Install a cotter pin to lock the top lever pin in place. A final check should be made to ensure the proper clearance exists between the release nut and the top lever. Finally, tighten the cap set screw to secure the cap.

29. After testing the valve for proper set point and blowdown, the ring pins, top lever pin and lift stop shall be sealed. Run a continuous wire through the sealing wire holes leaving both ends in such a manner that a lead seal may be threaded to them. Before crimping the seal, assure that the parts being sealed can not be tampered with, without removing the seal.

XIV. Setting and Testing

A. General Information

Upon completion of hydrostatic testing of the boiler, but prior to placing the boiler in service,

ENSURE THAT THE HYDROSTATIC TEST PLUGS ARE REMOVED FROM ALL VALVES.

All Type 2700 Safety Valves are steam tested at the factory to verify set pressure adjust ability and seat tightness. Every valve is set to have a clean popping action and to reseat tightly. However, because the boiler used in setting the valves has a small capacity, compared to the capacities of the Type 2700 Valves, the valves are factory set with a long blowdown to prevent chattering under initial start-up conditions. Final adjustments should be made on the operating system with conditions approximately those that will be realized under actual operating conditions.

Note: Dresser Consolidated® recommends full flow steam testing upon initial start up.

Adjusting ring settings are initial adjustments only and are not intended to be final adjustments.

The use of a Dresser Consolidated® Hydroset or EVT, unit can serve to establish set pressure but cannot be used for verifying blowdown,lift, etc. (For additional information, see Section X. Recommended Installation Practices, of this manual). It is recommended that the safety valves be tested and adjusted with the boiler isolated.

Factors which can affect valve operation, and which should be considered when initially setting a valve, are as follows:

1. Ambient temperature near the valve and valve temperature stabilization.

2. Line vibration.

3. Valve capacity versus rated flow through the line on which the valve is mounted.

4. Discharge stack or drain piping binding.

5. Flow induced vibrations or pressure pulsations set up by upstream bends. Valve inlet nozzle configuration, or other internal piping configuration problems.

6. High water level in the drum.

When the valves are subjected to working hydrostatic tests not exceeding the set pressure of the low set valve, valves may be gagged rather than using hydrostatic test plugs. For higher pressures, hydrostatic plugs should be used.

A common source of safety valve trouble is over-gagging. During hydrostatic testing, and during safety valve setting, gags should be applied only hand tight. During setting, over gagging will also cause damage to the seating surface and result in seat leakage.

The gag load applied should be only enough to ensure that the valves do not lift at the expected overpressure.

During start-up, gags should never be applied when the boiler is cold. The spindle of the safety valve expands considerably with the temperature increase. If it is not free to expand with this temperature change it may become seriously overstressed and bent.

Except for hydrostatic tests, boiler pressure should be brought up to within 80% of the pressure of the low set valve before applying gags.

Tighten the gags of drum and superheater valves finger tight.

When adjusting the ring positions of a valve, the valve must be gagged to prevent accidental lifting and personal danger.

If testing the set pressure of a valve, the other valves in the system should also be gagged.

B. Application of Test Gags

(All Pressures)

1. Refer to Figure 17. Remove top lever pin and top lever, then loosen the cap screw. Remove cap and drop lever as an assembly. The release nut is fixed to the spindle by means of a cotter pin. Note that the release nut does not quite engage top of compression screw.

2. Center the test gag in the exposed end of the SPINDLE and hook the legs of gag under the sides of the YOKE.

Do not apply the gag load until the system steam pressure is equal to 80% of the pressure to which the low set valve is adjusted.

3. Apply the gag load by turning the gag screw clockwise. If the gag on any valve has not been tightened sufficiently, the valve will leak. On steam service the leakage is accompanied by a "Sizzling" sound.

XIV. Setting and Testing (Contd.)

If this occurs, the hydrostatic test pressure or steam pressure should be reduced until the valve becomes tight and, then, the gag should be tightened still further.

This procedure must be followed exactly, since it is very difficult to stop the leak by additional gagging once it has started. Any attempt to stop the leakage through the valve, without first lowering the system pressure, could result in damage to the valve seats.

4. After the hydrostatic test or steam test is completed, the gags should be removed when the hydrostatic pressure has been reduced to 80% to 90% of the pressure of the low set valve.

Note: Under no circumstances should the gags be left on the valves during normal boiler operation.

C. Presetting Adjusting Rings

1. Remove the caps on all valves to be set on the steam drum and main steam line.

2. Install a currently calibrated pressure gauge on the drum near the valve being set. When main steam valve are to be set, install the calibrated gauge upstream from the valves on the main steam line to read line pressure.

3. After the pressure in the boiler has increased to 80% of operating pressure, install gags on all boiler valves not being tested. Gags should be installed hand tight, (no wrenches or mechanical force).

4. On the valve to be tested, use the following procedure and Table 9, to bring the adjusting ring to seat level.

   a) Gag the valve to prevent the disc from accidentally lifting from the seat during adjustment.

   b) Remove both service port plugs.

   c) Remove the upper ring pin.

   d) Move the upper ring until it is level with the disc holder.

   e) From this point, move the upper adjusting ring down, (from right to left as viewed through the service plug hole), counting the number of notches until the number in Column "B" in Table 9, appropriate to the orifice size is reached. This will establish the upper adjusting ring at seat level.

Table 9: Adjusting Ring Seat Level

Orifice	Lower Ring Seat Level Adjustment in Notches	Upper Ring Seat Level Adjustment in Notches
	(Column A)	(Column B)
1	7	10
2	8	12
3	12	16
5	12	16
4	12	16
6	30	45
7Q	30	45

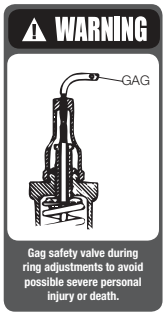

XIV. Setting and Testing (Contd.)

f) Adjust the upper adjusting ring as indicated in the upper ring Column of Table 10 use either the Saturated Column or Superheated Column as conditions warrant

g) Replace the ring pin in the valve to hold the upper adjusting ring in position without binding.

h) Remove the lower ring pin.

i) Move the lower adjusting ring up until it contacts the disc holder.

j) After referring to Table 9, lower the adjusting ring the number of notches indicated in Column "A" This setting will place the lower adjusting ring at seat level.

k) Once the lower adjusting ring is at seat level it can be preset to the beginning test position by moving the adjusting ring down one notch for each 600 psi (41.37 bar) or part thereof. (Example: 1,000 psi (68.95 bar) Set Pressure = 2 notches.)

l) Replace the adjusting ring pin in the valve to hold the lower adjusting ring in position without binding.

5. Wire the adjusting ring pins together to prevent them from loosening and vibrating out under pressure.
6. Replace the service port plugs.
7. Remove the gag from the valve to be tested, and reinstall the cap and lever assembly on the valve.
8. Now the valve is ready for steam testing.

D. Steam Testing Instructions

1. Attach a rope to the lifting lever on the valve to be tested.
2. Increase the boiler pressure at a rate not to exceed 2 psi (0.14 barg) per second. Note and record the pressure indicated on the pressure gauge when the valve "pops" open. After the valve pops open, reduce the fire in the boiler and lower the pressure until the valve closes, note and record the pressure when the valve closes. If in raising the boiler pressure, the valve doesn't open within 3% overpressure (for ASME Section I valves), or 10% overpressure (for ASME Section VIII valves), **reduce the fire in the boiler and pull the rope to open the valve.**
3. Determine if the valve popping point and reseating points comply with the ASME requirements for valve operation as recorded in Table 10. (**See ASME Boiler and Pressure Code Section I, or Section VIII Valve Operation Standards** for more details). To determine which standard to use, look at the nameplate on the valve. The symbol that is present on the nameplate will indicate the proper standard of operation. (See Table 11)
4. If the valve operation is in compliance with the standard, proceed to step 7.
5. If the valve is not in compliance, reduce boiler pressure to approximately 85% of valve set pressure. **GAG the safety valve being adjusted.**
   a) If set pressure is out of compliance turn the compression screw one sixth of a turn (clockwise to raise set pressure, and, counterclockwise to lower set pressure). Retest, and note the change in set pressure for one sixth turn-then calculate the number of turns needed to bring the set pressure to the desired pressure. Adjust as necessary.
   b) If the blowdown is excessive, **raise** the upper adjusting ring (5 to 10 notches). If the blowdown is insufficient, **lower** the upper adjusting ring (5 to 10 notches). Re-test as in step 2, if the blowdown is not within specification repeat step 5.
6. Remove the gag, and repeat Step 2, raising the pressure until the valve pops then proceed with the following steps until the subject valve is in compliance with the appropriate standard.
7. After one pop has been determined to be in compliance, test the valve two more times for consistency of set pressure and blowdown. Allow a minimum of 10 minutes between pops. If the operation remains in compliance with the standard, reduce the boiler pressure to approximately 85% of the set pressure and seal the valve cap and adjusting ring pins.
8. Proceed to the next valve to be tested.
9. When all valve have been tested and sealed, return the boiler to normal operating pressure. (See Table 12)

XIV. Setting and Testing (Contd.)

Table 10: Adjusting Ring Presetting Information[1]

Orifice	Orifice Area		Set Pressure Range				Lower Ring Position [2, 4]	Saturated Steam (Temp. Class B)		Superheated Steam (Temp. Class D)	
			min.		max.						
	in²	cm²	psig	barg	psig	barg		Upper Ring[2] (Seat)	Upper Ring[3] (Disc Holder)	Upper Ring[2] (Seat)	Upper Ring[3] (Disc Holder)
#1	0.994	6.413	101	6.96	300	20.68	1N down per 600 psig. (413.68 barg) Max. 5N down	Seat Level	10N (down)	Seat Level	10N (down)
			301	20.75	500	34.47		20N (up)	10N (up)	Seat Level	10N (down)
			501	34.54	900	62.05		20N (up)	10N (up)	Seat Level	10N (down)
			901	62.12	1500	103.42		15N (up)	5N (up)	5N (down)	15N (down)
			1501	103.49	2500	172.37		10N (up)	3N (down)	10N (down)	23N (down)
			2501	172.44	2800	193.05		10N (up)	3N (down)	10N (down)	23N (down)
			2801	193.12	3000	206.84		5N (up)	8N (down)	15N (down)	28N (down)
#2	1.431	9.232	101	6.96	300	20.68	1N down per 600 psig. (413.68 barg) Max. 5N down	Seat Level	12N (down)	Seat Level	12N (down)
			301	20.75	500	34.47		20N (up)	8N (up)	Seat Level	12N (down)
			501	34.54	900	62.05		20N (up)	8N (up)	Seat Level	12N (down)
			901	62.12	1500	103.42		15N (up)	3N (up)	5N (down)	17N (down)
			1501	103.49	2500	172.37		10N (up)	Level w/ Holder	10N (down)	22N (down)
			2501	172.44	2800	193.05		10N (up)	Level w/ Holder	10N (down)	22N (down)
			2801	193.12	3000	206.84		5N (up)	7N (down)	15N (down)	27N (down)
#3	2.545	16.419	101	6.96	300	20.68	1N down per 600 psig. (413.68 barg) Max. 5N down	Seat Level	16N (down)	Seat Level	16N (down)
			301	20.75	500	34.47		25N (up)	9N (up)	Seat Level	16N (down)
			501	34.54	900	62.05		25N (up)	9N (up)	Seat Level	16N (down)
			901	62.12	1500	103.42		20N (up)	4N (up)	10N (down)	26N (down)
			1501	103.49	2500	172.37		15N (up)	Level w/ Holder	20N (down)	36N (down)
			2501	172.44	2800	193.05		15N (up)	Level w/ Holder	20N (down)	36N (down)
			2801	193.12	3000	206.84		15N (up)	Level w/ Holder	20N (down)	36N (down)
#5	3.341	21.555	101	6.96	300	20.68	1N down per 600 psig. (413.68 barg) Max. 5N down	8N (down)	25N (down)	8N (down)	25N (down)
			301	20.75	500	34.47		50N (up)	34N (up)	Seat Level	16N (down)
			501	34.54	900	62.05		40N (up)	24N (up)	10N (down)	26N (down)
			901	62.12	1500	103.42		40N (up)	24N (up)	10N (down)	26N (down)
			1501	103.49	2500	172.37		40N (up)	24N (up)	15N (down)	31N (down)
			2501	172.44	2800	193.05		45N (up)	29N (up)	25N (down)	41N (down)
			2801	193.12	3000	206.84		45N (up)	29N (up)	25N (down)	41N (down)
#4	3.976	25.652	101	6.96	300	20.68	1N down per 600 psig. (413.68 barg) Max. 5N down	9N (down)	25N (down)	9N (down)	25N (down)
			301	20.75	500	34.47		55N (up)	38N (up)	Seat Level	17N (down)
			501	34.54	900	62.05		50N (up)	33N (up)	10N (down)	27N (down)
			901	62.12	1500	103.42		45N (up)	28N (up)	15N (down)	32N (down)
			1501	103.49	2500	172.37		45N (up)	28N (up)	20N (down)	37N (down)
			2501	172.44	2800	193.05		45N (up)	28N (up)	25N (down)	42N (down)
			2801	193.12	3000	206.84		45N (up)	28N (up)	25N (down)	42N (down)
#6	7.070	45.613	101	6.96	300	20.68	1N down per 600 psig. (413.68 barg) Max. 5N down	Seat Level	45N (down)	Seat Level	45N (down)
			301	20.75	500	34.47		70N (up)	25N (up)	Seat Level	45N (down)
			501	34.54	900	62.05		65N (up)	20N (up)	10N (down)	55N (down)
			901	62.12	1100	75.84		60N (up)	15N (up)	20N (down)	65N (down)
Q	12.250	79.032	All Pressures				1N down per 600 psig. (413.68 barg) Max. 3N down	Seat Level	45N (down)	½ Turn Below Seat Level	81N (down)

Note 1: For pressures over those listed in this table, use the same ring setting as the highest listed pressures.
Note 2: Position reference to seat level
Note 3: Position reference to the bottom of disc holder.
Note 4: If valve is to be tested on superheated steam, set lower ring at seat level.

XIV. Setting and Testing (Contd.)

Table 11: Nameplate Symbols

ASME Boiler and Pressure Vessel Code Section and Symbol	Set Pressure Tolerance (The valve must "POP" open within the range indicated below.)	Blowdown Requirements
V **CODE SYMBOL STAMP ASME Section I**	If valve set pressure is less than or equal to 70 psig (4.83 barg) ± 2 psig (0.14 barg) If valve set pressure is 71 psig (4.90 barg) up to and including 300 psig (20.68 barg) ± 3% of set pressure If valve set pressure is 301 psig (20.75 barg) up to and including 1000 psig (68.75 barg) ± 10 psig (±0.69 barg) If valve set pressure is 1001 psig (69.02 barg) or greater ±1% of set pressure	After opening, the valve must reclose within a range of 98% to 96%, however, if the valve set pressure is 100 psig (6.89 barg) or less the valve must reclose within a range of 2 to 4 psig (0.14 to 0.28 barg) below set pressure.
UV **CODE SYMBOL STAMP ASME Section VIII**	If valve set pressure is less than or equal to 70 psig (4.83 barg) ± 2 psig (±0.14 barg) If valve set pressure is 71 psig (4.90 barg) or greater ± 3% of set pressure	After opening the valve must reclose before the system pressure returns to normal operating pressure.

Table 12: Recommended Operating Gap

Boiler Design Pressure	Minimum Differential as a Percent of Boiler Design Pressure
Over 15 to 300 psig (1.03 to 20.68 barg)	10% but not less than 7 psi (0.48 barg)
Over 300 to 1000 psig (20.68 to 68.95 barg)	7% but not less than 30 psi (2.07 barg)
Over 1000 to 2000 psig (68.95 to 137.90 barg)	5% but not less than 70 psi (4.83 barg)

XIV. Setting and Testing (Contd.)

E. Hydroset/Electronic Valve Testing (EVT)

Periodic tests may be required for verification of valve set pressure. Both the Dresser Consolidated® Hydroset Test Device and EVT provide for this capability; however, set pressure is the only factor which can be verified. Valves should be initially set using full system pressure (as outlined in sections XIV.A. through XIV.C. of this manual). The Hydroset, or EVT used for subsequent checks of set pressure.

Setting safety valves by the recommended method of lifting valves under steam pressure presents a number of problems. In high pressure conventional boilers, superheater tubes may be damaged if the turbine is not operating. Also, the expense of feed water, fuel and personnel involved is considerable.

Although these problems cannot be eliminated entirely, they can be reduced by using a hydraulic or electronic device that allows the set pressure to be checked, while the system pressure remains below the set pressure.

Accuracy of results obtained by the use of either of these devices depends on several factors. First, friction must be reduced as a source of error so that, for a given pressure, the Hydroset or the EVT repeatedly produces exactly the same lifting force. Second, gauge calibration and vibration, in the effective seating area between valves of the same size and type, will also affect accuracy. With well calibrated gauges and valve seats in good condition, accuracy on the order of ±1% of set pressure may be expected. Upon request, Dresser Consolidated® will provide pertinent written material concerning the Dresser Consolidated® Hydroset Device, or the EVT. This material specifies all required information necessary to ensure proper usage of these devices.

F. Hydrostatic Test Plug Removal-Domestic & Export

F.1 General Information

Flanged inlet safety valves shipped without Hydrostatic Test Plugs should be removed from the boiler during hydrostatic tests and boiler nozzles blanked off to prevent possible valve damage.

All valves shipped outside the continental United States are shipped with an export hydroplug (See Figure 20). All welded inlet valves shipped within the continental United States are shipped with a domestic hydroplug (See Figure 19), unless the customer specifically requests otherwise. All flanged inlet valves shipped within the continental United States are shipped without a hydroplug, unless one is specifically requested by the customer.

Valves shipped with either type of hydroplug are identified by a Red on White CAUTION TAG which is attached to the valve by wires extending through the drain hole in the valve body. (See Figure 18)

XIV. Setting and Testing (Contd.)

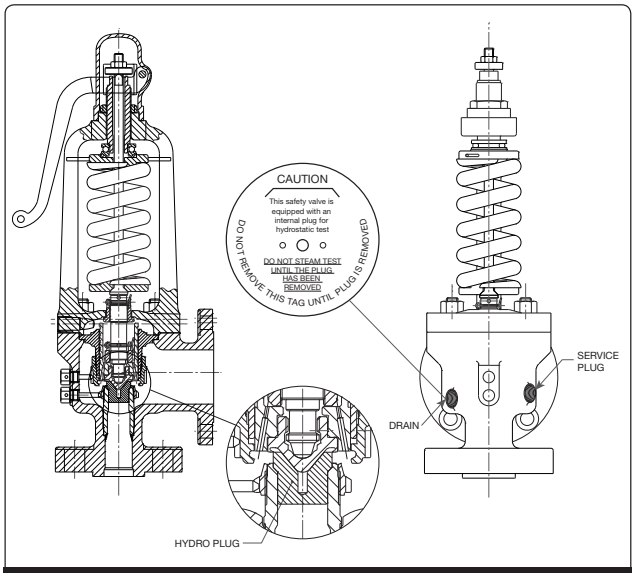

Figure 17: Hydrostatic Test Plug

Hydrostatic test plugs must be removed prior to firing boiler.

The hydrostatic plugs are placed in the bore of the valve, inside the seating surface. Their purpose is twofold. First, they effect closure at a point differing from the seating surface of the valve so that, if the valve is lifted on hydrostatic test, the seating surface is not as likely to be damaged. Second, by raising the disc of the valve off its seat and increasing spring compression, the set pressure of the valve is increased to a point where the valve will not leak at one and one-half times design boiler pressure. It is not necessary to gag the safety valves when hydrostatic plugs are used.

These plugs must, of course, be removed from the valves prior to placing the boiler in service. However, they should be retained, and reinstalled, whenever a hydrostatic test is conducted which exceeds the low set valve pressure.

Before starting to disassemble the valve, be sure that there is no steam pressure in the drum or header.

XIV. Setting and Testing (Contd.)

F.2 Domestic Plugs

To remove the domestic plug, the following steps must be followed:

1. Remove the cap assembly, adjust release nut to 2nd hole from the top of the spindle and install cotter pin.
2. Back off the yoke stud nuts uniformly until compression screw engages release nut. Now remove yoke stud nuts.
3. Yoke and spring assembly, (See Figure 20), from base, being careful not to damage the disc.
4. Remove the hydrostatic test plug from the seat bushing. This may be accomplished by inserting a threaded rod into the tapped hole in the plug and lifting up until free from bushing. Care should be taken as not to damage the seat bushing.
5. Remove the disc from the disc holder by turning clockwise until it is disengaged from spindle threads.

Note: Hold the disc holder against the disc adjusting collar during this step, otherwise the disc holder will fall from the spindle and become damaged.

6. Lap the disc and seat bushing and thoroughly clean the seats with a clean cloth.
7. Lubricate the spindle tip with "Anti-Seize", and assemble the disc and disc holder to spindle by turning the disc until the dropout threads disengage.
8. Reassemble yoke and spring assembly (See Figure 20) into base, being careful not to damage the disc. Locate the yoke vent to the side of the valve. The lug on the top spring washer should be on the right side of the valve when facing the outlet.
9. Replace the yoke and the stud nuts. Tighten the stud nuts according to Table 13.
10. Remove cotter pin from release nut and position release nut so that .125" (3.17 mm) of clearance is visible between lifting fork and release nut, then install cotter pin.
11. Install cap and lever assembly.
12. Valve is now ready for the initial field test on steam in order to check valve set point and blowdown.

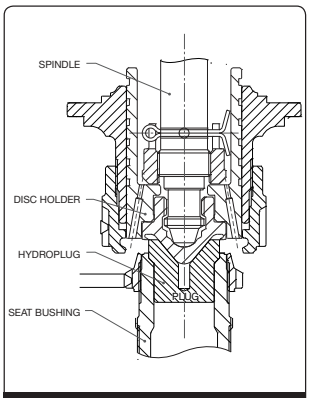

Figure 18: Domestic hydrostatic plug

Table 13: Yoke Nut Torque Values

Orifice Designation	Nut Torque	
	ft-lbs	Nm
1	60	81.35
2	60	81.35
3	110	149.14
5[1]	170	230.49
4[1]	375	508.43
6	375	508.43
7Q	375	508.43

Note 1: #5 is a smaller orifice than #4.

XIV. Setting and Testing (Contd.)

F.3 Export Plugs

When hydrostatic plugs are installed in 2700 Valves scheduled for shipment to foreign countries, the disc is removed and dipped in preservative, then packed in a box. The package is then inserted into the valve outlet.

To remove the special export plug, the following steps must be followed:

1. Remove the cap assembly, adjust release nut to 2nd hole from the top of the spindle and install cotter pin.
2. Back off the yoke stud nuts uniformly until compression screw engages release nut Now remove yoke stud nuts.
3. Remove yoke and spring assembly, (See Figure 20), from base.
4. Remove hydrostatic plug by turning until it is disengaged from spindle threads.

Note: Hold the disc holder against the disc adjusting collar during this step, otherwise the disc holder will fall from the spindle and become damaged.

5. Remove the seal peel preservative from the disc.
6. Lap the disc and seat bushing, thoroughly clean the seats with a clean cloth.
7. Lubricate the spindle tip with "Anti-Seize", and assemble the disc and disc holder to spindle by turning the disc until the dropout threads disengage.
8. Reassemble yoke and spring assembly (See Figure 20) into base being careful not to damage the disc. Locate the yoke vent to the side of the valve. The lug on the top spring washer should be on the right side of the valve when facing the outlet.
9. Replace the yoke and the stud nuts. Tighten the stud nuts according to Table 13.
10. Remove cotter pin from release nut and position release nut so that .125" (3.17 mm) of clearance is visible between lifting fork and release nut, then install cotter pin.
11. Install cap and lever assembly.
12. Valve is now ready for the initial field test on steam in order to check valve set point and blowdown.

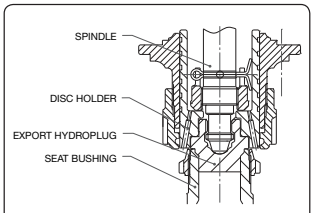

Figure 19: Export Hydrostatic Plug

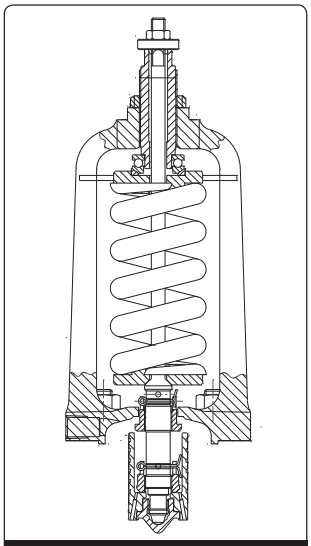

Figure 20: Yoke and Spring Assembly

XV. Trouble Shooting The 2700 Valves

Problem	Possible Cause	Corrective Action
No Action, Valve does not go into full lift.	A. Upper ring too high. B. Foreign material trapped between disc holder & guide.	A. Increase blowdown as outline in Section XV.C.4. of this manual. B. Disassemble valve and correct any abnormality as outline in Section XI. of this manual. Inspect system for cleanliness
Simmer	A. Lower ring too low. B. Steam line vibrations	A. Adjust per Section XV.C.2. of this manual. B. Investigate and correct cause
Valve Leaking and/ or exhibits erratic popping actions.	A. Damaged seat B. Part misalignment. C. Disc has insufficient rock. D. Discharge stack binding on outlet.	A. Disassemble valve, lap seating surfaces, replace disc if required, as outlined in Section XIX.B. of this manual. B. Disassemble valve, inspect contact area of disc and nozzle, lower spring washer or spindle, compression screw, spindle straightness, etc. C. Disassemble valve and check disc rock per Section XIX.E. of this manual. D. Correct as required.
Hangup, or valve does not close completely.	A. Lower ring too high. B. Foreign material.	A. Move lower ring to the left one notch per adjustment and test. Repeat until problem is eliminated. B. Disassemble valve and correct any abnormal condition. Inspect system for cleanliness.
Excessive blowdown	A. Upper ring too low. B. Exhaust pressure too high.	A. Decrease blowdown as outlined in Section XV.C.3. of this manual. B. Decrease exhaust pressure by increasing discharge stack area.
Chatter or short blowdown	A. Upper ring too high. B. Inlet piping pressure drop too high. C. Yoke vent is plugged.	A. Lower upper ring. B. Reduce inlet pressure drop to less than one-half of required valve blowdown by redesigning inlet piping. C. Clear yoke vent.

XVI. Maintenance Tools and Supplies

Lapping Tools

The following tools are required for proper maintenance of Consolidated® Type 2700 Safety Valve seats

Ring Lap

The ring lap is used for lapping the nozzle and disc seats.

Ring Laps[1]	
Valve Orifice[2]	Lap Part NO.
1	1672806
2	1672807
3	1672808
5	1672810
4	1672809
6	1672811
Q	1672812

Note 1: One set of (2) Ring Laps is recommended for each orifice valve in service, to assure ample flat laps are available at all times.

Note 2: Valve orifice number is third digit of valve type number, e.g. a 2737A valve has a #3 orifice.

Lapping Plate

The lapping plate is used for reconditioning the ring laps. Only one 11" (279.40 mm) diameter plate is required for all sizes of ring laps.

Resurfacing Plate – 11" (279.40 mm) Diameter. (Part No. 0439004)

Lapping Compound

Lapping compound is used as a cutting medium for lapping and polishing the seats and bearing surfaces in Type 2700 Safety Valves.

Brand	Grand	Grit	Lapping Function	Size Container	Part No.
Clover	1A	320	General	4 oz.	199-3
Clover	C	220	Coarse	4 oz.	199-2
Kwik-Ak-Shun	-	1000	Polishing	1 lb.	199-11
				2 oz.	199-12

Gags

Valve Orifice	Gag Part No.
1	VJ5920
2	VJ5920
3	4363001
5	4363001
4	4363001
6	4363001
Q	4363001

Lubricant

Location	Lubricant
Bearing Points	Fel-Pro Nickel Ease
1. Spindle/Disc	
2. Compression Screw/ Top Spring Washer	
3. Spindle/Bottom Spring Washer	
All Threads	
All Nut Contact Faces	

Wrench Sizes

2700 Orifice	Yoke Stud Size		Wrench Size
	in.	mm	in.
#1	.625 - 11 thd.	15.88 - 11 thd.	1-1/16
#2	.625 - 11 thd.	15.88 -11 thd.	1-1/16
#3	.750 - 10 thd.	19.05 - 10 thd.	1-1/4
#5	.875 - 9 thd.	22.23 - 9 thd.	1-7/16
#4	.875 - 9 thd.	22.23 - 9 thd.	1-7/16
#6	1.125 - 7 thd.	28.58 - 7 thd.	1-13/16
#Q	1.125 - 7 thd.	28.58 - 7 thd.	1-13/16

XVII. Replacement Parts Planning

A. Basic Guidelines

The basic objectives in formulating a replacement parts plan are:

- PROMPT AVAILABILITY
- MINIMUM DOWNTIME
- SENSIBLE COST
- SOURCE CONTROL

Consult the Recommended Spare Parts list to define the parts to be included in the inventory plan.

Select parts and specify quantities.

Guidelines for establishing meaningful inventory levels:

Parts Classification		
Part Classification	Replacement Frequency	Predicted Availability
CLASS I	Most Frequent	70%
CLASS II	Less Frequent But Critical	85%
CLASS III	Seldom Replaced	95%
CLASS IV	Hardware	99%
CLASS V	Practically Never Replaced	100%

B. Identification and Ordering Essentials

Explanation of Name Plate

The valve nameplate contains several necessary pieces of information necessary to the proper operation of the valve. Included are:

- Valve Type
- ASME, and National Board of Boiler and Pressure Vessel Inspectors Approval Stamp
- Serial Number
- Set Pressure or Opening Pressure
- Disc Lift
- Operating Temperature
- Capacity

2700 Valve Series nameplate is located on the base of the valve, to the left of the Adjusting Ring Pins. If the nameplate is missing, a duplicate nameplate can be supplied by Dresser Flow Control. To order the replacement nameplate, call the Dresser Consolidated® Field Service Supervisor at (318) 640-6055, with the valve serial number as stamped on the top of the discharge flange of the valve.

Table 14

Standard Valve Connection					Pressure Class		Temperature Class	
Inlet Size		Orifice	Area		Designation	Class	Designation	Range
in.	mm		in^2	cm^2				
1.5	38.10	1	0.994	6.41	5	600# ANSI	B	TO 750°F (398.89 °C)
2.0	50.80	2	1.431	9.23	6	900# ANSI	D	TO 1050°F (565.56 °C)
2.5	63.50	3	2.545	16.42	7	1500# ANSI		
3.0	76.20	5	3.341	21.55				
3.0	76.20	4	3.976	25.65				
4.0	101.60	6	7.070	45.61				
6.0	152.40	7Q	12.250	79.03				

XVII. Replacement Parts Planning (Contd.)

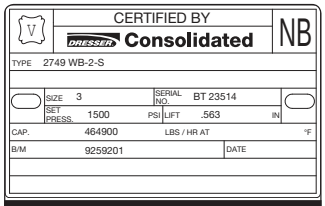

Figure 21: Valve Identification

VALVE TYPE CODING

Flanged Inlet:

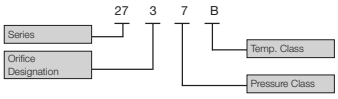

Buttweld Inlet:

XVIII. Genuine Dresser Parts

The next time replacement parts are needed, keep these points in mind:

- Dresser Consolidated® designed the parts
- Dresser Consolidated® guarantees the parts
- Consolidated® valve products have been in use since 1879
- Dresser Consolidated® has worldwide service
- Dresser Consolidated® has fast response availability for parts

XIX. Manufacturer's Field Service & Repair Program

A. Factory Setting vs. Field Setting

Every Consolidated® Safety Valve is set and adjusted on steam before shipment from the factory. Ring adjustments are made at the factory. However, it must be recognized that actual field operating conditions may vary considerably from factory test conditions.

Conditions beyond the manufacturer's control that affect Safety Valve operation include:

- Improper header nozzle design
- Quality of media being discharged
- Discharge piping stresses and back pressure
- Ambient temperature
- Shipping or storage damage
- Improper gagging
- Damage due to foreign material in the steam

Final Safety Valve adjustments made on the actual installation are the best means of ensuring that the valves perform in compliance with the ASME Boiler Code and/or other applicable code requirements.

B. Field Service

Utilities and Process Industries expect and demand service at a moment's notice. Consolidated® Field Service can be depended upon for prompt response, even in extreme off-hour emergency situations.

Dresser Consolidated® maintains the largest and most competent field service staff in the industry. Service Engineers are located at strategic points throughout the United States to respond to customer's requirements for service. Each Service Engineer is factory trained and long experienced in servicing Safety Valves. Dresser Consolidated® Service Engineers restore disc and seat bushing critical dimensions which affect valve performance, and are capable of modernizing valves in the field.

It is highly recommended that the professional talents of a Dresser Consolidated® Field Service Engineer be employed to make final field adjustments during the initial setting of all Consolidated® Safety Valves.

All Field Service Engineers' activities are coordinated from the Alexandria, Louisiana, Field Service Office. Upon receipt of a purchase order number authorizing the trip, the engineer is dispatched.

Reference: www.consolidatedvalve.com to locate your local Field Service representative.

C. Factory Repair Facilities

The factory at Alexandria, Louisiana maintains a Consolidated® Repair Center. The repair department, in conjunction with the manufacturing facilities, is equipped to perform specialized repairs and product modifications, e.g. bushing replacements, hydroset calibrations, electromatic relief valve repairs, etc.

Contact: Valve Repair Department at (318) 640-6057.

D. Safety Valve Maintenance Training

Rising costs of maintenance and repair in the Utility and Process Industries indicate the need for trained maintenance personnel. Dresser Industrial Valve Operation conducts service seminars that can help your maintenance and engineering personnel to reduce these costs.

Seminars, conducted either at your site, or at our Alexandria, Louisiana manufacturing plant, provide participants with an introduction to the basics of preventative maintenance. These seminars help to minimize downtime, reduce unplanned repairs and increase valve safety. While they do not make "instant" experts, they do provide the participants with "Hands On" experience with Consolidated Valves. The seminar also includes valve terminology and nomenclature, component inspection, trouble shooting, setting and testing, with emphasis on the ASME Boiler and Pressure Vessel Code.

For further information, Please contact the Product Training Manager by fax at (318) 640-6325, or telephone (318) 640-6054.

Sales Office Locations

UNITED STATES

Dresser Consolidated®
Dresser, Inc.
LA Hwy. 3225 @ US Hwy. 167N
P.O. Box 1430
Alexandria, LA 71309-1430
Telephone: + (1) 318 640 2250
Fax: + (1) 318 640 6325

Dresser Consolidated® Headquarters
10343 Sam Houston Park Drive
Suite 210
Houston, TX 77064
Telephone: +(1) 281 671 1640
Fax: +(1) 281 671 1735

Dresser Direct
1250 Hall Court
Deer Park, TX 77536
Telephone: + (1) 281 884 1000
Fax: + (1) 281 884 1010

Dresser Direct
905A Industrial Road
Clute, TX 77531
Telephone: + (1) 979 265 1309
Fax: + (1) 979 265 2514

Dresser Direct
4841 Leopard Street
Corpus Christi, TX 78408
Telephone: + (1) 361 881 8182
Fax: + (1) 361 881 8246

BRAZIL

Dresser Industria E Comercio Ltda
Rod. Presidente Dutra, KM 154, 7
Predio 18 - Pq Industrial CEP 12240-420
San Jose dos Campos, Sau Paulo, Brazil
Telephone: + (55) 11 2146 3600
Fax: + (55) 11 2146 3610

CHINA

Dresser Machinery (Suzhou) Co., Ltd.
81, Suhong Zhong Road
Suzhou Industrial Park
Suzhou, P.R. China 215021
Telephone: + (86) 512 6258 6500
Fax: + (86) 512 6258 8590

Dresser, Inc.
Suite 1703, Capital Mansion
6 Xinyuan S. Road, Chaoyang District
Beijing 100004 P.R. China
Telephone: + (86) 10 8486 4515
Fax: + (86) 10 8486 5305

FRANCE

Dresser Flow Technology Europe
Energy 5 - 130/190 Bd de Verdun
92413 Courbevoie Cedex, France
Tel: + (33) 1 49 04 90 00
Fax: + (33) 1 49 04 90 10

GERMANY

Dresser Valves Europe GmbH
Heiligenstrasse 75
41751 Viersen, Germany
Tel: + (49) 2162 8170 0
Fax: + (49) 2162 8170 280

INDIA

Dresser Valve India Pvt. Ltd.
305/306, "Midas", Sahar Plaza
Mathuradas Vasanji Road
J B Nagar, Andheri East, Mumbai, India 400 059
Telephone: + (91) 22 2 835 4790 / 838 1134
Fax: + (91) 22 2 835 4791

ITALY

Dresser Italia S.r.l.
Via Cassano 77
80020 Casavatore (Naples), Italy
Telephone: + (39) 081 7892 111
Fax: + (39) 081 7892 308

JAPAN

Dresser Japan,Ltd. (DJL)
20th Floor Marive East Tower
WBG 2-6 Nakase
Mihama-ku Chiba-shi
Chiba 261-7120 Japan
Telephone: + (81) 43 297 9211
Fax: + (81) 43 299 1115

KOREA

Dresser Korea, Inc.
Hyundai Swiss Tower, 17 Floor
143-40, Samsun-don Kangham-ku
Seoul 135-090, Korea
Telephone: + (82) 2 2274 0748
Fax: + (82) 2 2274 0720

Sales Office Locations

MALAYSIA

Dresser, Inc.
Asia Pacific Headquarters
Business Suite 19A-9-1, Level 9
UOA Centre, No. 19 Jalan Pinang
50450 Kuala Lumpur, West Malaysia
Telephone: + (60) 3 2161 0322
Fax: + (60) 3 2163 6312

MEXICO

Dresser De Mexico S.A. de C.V.
Henry Ford #114 Esq. Fulton
Fraccionamiento Industrial San Nicolas
C.P. 54030 Tlalnepantla, Estado de Mexico
Telephone: + (52) 55 5310 9863
Fax: + (52) 55 5310 4279

THE NETHERLANDS

Dresser Valves Europe GmbH
Steenhouwerstraat 11
NL-3194 AG Hoogvliet, The Netherlands
Telephone: + (31) 10 866 6538
Fax: + (31) 79 361 8995

RUSSIA

Dresser Europe
Derbenevskaya Ulitsa 1, Bldg. 3, Office 17
Moscow, Russian Federation 115 114
Telephone: + (7) 4955 851276
Fax: + (7) 4955 851279

SAUDI ARABIA

Dresser Al Rushaid Valve & Inst. Co. Ltd.
(DARVICO)
P. O. Box 10145
Jubail Industrial City 31961
Kingdom of Saudi Arabia
Telephone: + (966) 3 341 0278
Fax: + (966) 3 341 7624

SINGAPORE

Dresser Singapore, Pte. Ltd.
Dresser Flow Solutions
16 Tuas Avenue 8
Singapore 639231
Telephone: + (65) 6861 6100
Fax: + (65) 6861 7197

SOUTH AFRICA

Dresser International, Ltd., South Africa Branch
Dresser Flow Solutions
P. O. Box 2234, 16 Edendale Road
Eastleigh, Edenvale 1610
Republic of South Africa
Telephone: + (27) 11 452 1550
Fax: + (27) 11 452 2903

SPAIN

Dresser Italia S.r.l.
Via Cassano 77
80020 Casavatore (Naples), Italy
Telephone: + (39) 081 7892 111
Fax: + (39) 081 7892 308

SWITZERLAND

Dresser Valves Europe GmbH
Windenboden 23
CH-6345 Neuheim, Switzerland
Telephone: + (41) 41 755 27 03
Fax: + (41) 41 755 28 13

UNITED ARAB EMIRATES

Dresser International, Inc. - Middle East Operations
P. O. Box 61302
R/A 8, Blue Sheds JA01 & JA02,
Jebel Ali Free Zone
Dubai, United Arab Emirates
Telephone: + (971) 4 8838752
Fax: + (971) 4 8838038

UNITED KINGDOM

Dresser U.K. Limited
Dresser House
East Gillibrands
Skelmersdale, Lancashire
England WN8 9TU United Kingdom
Telephone: + (44) 1695 52600
Fax: + (44) 1695 52601

FOR YOUR GREEN TAG CENTER IN USA/CANADA
Visit www.dresser.com

or contact the locations listed above for international service.

Dresser® and Consolidated® are registered trademarks of Dresser, Inc.
Copyright 2007, Dresser, Inc.

About Dresser Consolidated

Dresser Consolidated, headquartered in Houston, Texas, has been an international leader in dependable pressure relief valves and solutions for more than 100 years. A business segment of Dresser, Inc., the company delivers the trusted expertise to provide and service reliable flow safety systems in critical applications around the world. www.dresser.com

About Dresser, Inc.

Dresser, Inc. is a leader in providing highly engineered infrastructure products for the global energy industry. The company has leading positions in a broad portfolio of products, including valves, actuators, meters, switches, regulators, piping products, natural gas-fueled engines, retail fuel dispensers and associated retail point-of-sale systems, and air and gas handling equipment. Leading brand names within the Dresser portfolio include Dresser Wayne® retail fueling systems, Waukesha® natural gas-fired engines, Masoneilan® control valves, Consolidated® pressure relief valves, and Roots® blowers. It has manufacturing and customer service facilities located strategically worldwide and a sales presence in more than 100 countries.

Dresser, Inc.
15455 Dallas Parkway
Addison, TX 75001
T. 972 361 9800
F. 972 361 9903

DRESSER Consolidated

www.consolidatedvalve.com

© 2009 Dresser, Inc. All rights reserved.

2700_MM

Consolidated

IOM 2900 Series Pressure Relief Valves

Vogt Power International

Project #: V17491 / Amata ABPRS

PO #: V0010363

Tag #: 51/52 LAB50AA401
51/52 LAB10AA401

VOGT POWER INTERNATIONAL
V17491-PVDE-602-00
18-Nov-2016

VOGT POWER INTERNATIONAL
Released: Work Ready Released
Approved: Pramod Dec-01-2016

DRESSER Consolidated

Pressure Relief Valves

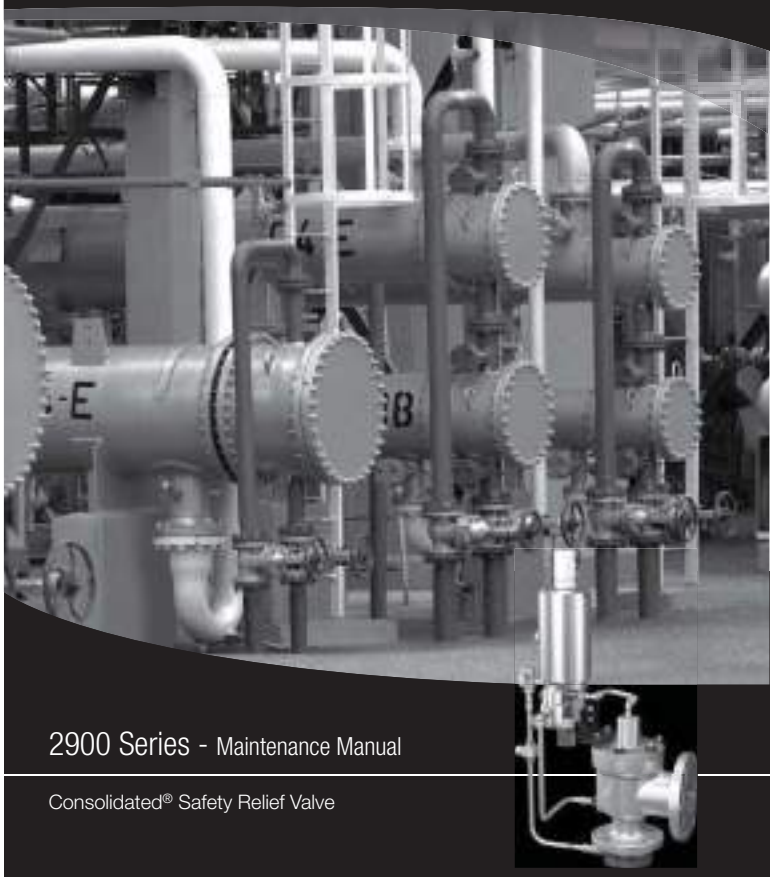

2900 Series - Maintenance Manual

Consolidated® Safety Relief Valve

Conversion Table

All the USCS values in the Manual is converted to Metric values using following conversion factors:

USCS Unit	Conversion Factor	Metric Unit[1]
in.	25.4	mm
lb.	0.4535924	kg
in^2	6.4516	cm^2
ft^3/min	0.02831685	m^3/min
gal/min	3.785412	L/min
lb/hr	0.4535924	kg/hr
psig	0.06894757	barg
ft lb	1.3558181	Nm
°F	5/9 (°F-32)	°C

Note 1: Multiply USCS value with Conversion Factor to get Metric value.

NOTICE

For valve configurations not listed in this manual, please contact your local Greentag™ Center for assistance.

Table of Contents

Section	Subject	Page No
I.	Product Safety Sign and Label System	6
II.	Safety Precautions	7
III.	Safety Notice	9
IV.	Warranty Information	10
V.	Terminology for Pilot Operated Safety Relief Valves	11
VI.	Handling and Storage	12
VII.	Pre-Installation and Installation Instructions	13
VIII.	Introduction	14
	A. General Introduction	14
	B. Main Valve Introduction	14
	C. Pilot Valve Introduction	14
IX.	Consolidated® 2900 Series Pilot Operated Safety Relief Valves	15
	A. Metal Seat Valve	15
	B. Soft Seat Valve	15
	C. D - U Orifice (With Bellows)	16
	D. V - W Orifice (With Bellows)	16
	E. 39PV07/37 Pilot Valves (Standard Service)	17
	F. 39MV07 Pilot Valve (Standard Service)	18
	G. 39MV22/72 Pilot Valve (Standard Service)	19
X.	Operating Principles	20
	A. 2900 Series with Type 39PV (Pop) Pilot Operational Descriptions	20
	B. 2900 Series 39MV07(Modulating) Pilot Operational Descriptions	22
XI.	General Planning for Maintenance	24
XII.	Recommended Installation Practices	24
	A. Mounting Position	24
	B. Inlet Piping	25
	C. Outlet Piping	25
	D. Remote Sensing	26
	E. Freeze Protection	26
XIII.	Disassembly of the 2900 POSRV	28
	A. Removal of the Pilot Valve from the Main Valve	28
	B. Disassembly of the Main Valve	28
	C. Cleaning	33
XIV.	Maintenance Instructions	34
	A. General Maintenance Information	34
	B. O-Ring Seat	34
	C. Lapping Nozzle Seats (Metal Seat - Non-O-Ring Styles)	36
	D. Lapped Nozzle Seat Widths	36
	E. Lapping Disc Seats	38
	F. Precautions and Hints for Lapping Seats	38
	G. Reconditioning of Laps	38

Table of Contents

Section	Subject	Page No
	H. Re-Machining Nozzle Seats	39
	I. Re-Machining the Disc Seat	39
XV.	Inspection and Part Replacement	41
	1. Guide	41
	2. Base	41
	3. Bellows	41
	4. Cover Plate	41
	5. O-Ring Retainer	42
	6. Nozzle	42
	7. Spring	42
	8. Standard Metal Seated Disc	42
	9. Thermodisc® Metal Seated Disc	42
	10. O-Ring Seated Disc	43
	11. Disc Holder	43
	12. Solid Metal Gaskets	43
	13. Main Valve Piston	43
XVI.	Reassembly of 2900 Main Valve	44
	A. Lubricants and Sealants	44
	B. Assembly Procedure with Metal Seats	44
	C. Assembly Procedure with O-Ring Seats	44
XVII.	Disassembly of Pilot Valve	48
	A. 39PV07/37 Disassembly	48
	B. 39MV07 Disassembly	51
	C. 39MV22/72 Disassembly	54
	D. Cleaning	57
XVIII.	Part Inspection of Pilot Valve	58
	A. 39PV07/37	58
	B. 39MV07	58
	C. 39MV22/72	59
XIX.	Reassembly of Pilot Valve	60
	A. Lubricants and Sealants	60
	B. Assembly of 39PV07/37	60
	C. Assembly of 39MV07	62
	D. Assembly of 39MV22/72	64
XX.	Setting and Testing	67
	A. General Information	67
	B. With Standard Options	67
	B.1 39PV07/37	66
	B.2 39MV07, 39MV22 AND 39MV72	68
	C. With Sensing Ring Option	68
	D. Troubleshooting Leakage	69
	E. Conversions between Conventional and Bellows Type	71

Table of Contents

Section	Subject	Page No
	F. Field Testing of POSRV Assembly	71
	F.1 Field Test Connection	71
	F.2 Pilot Valve Tester	71
XXI.	Troubleshooting	72
XXII.	2900 Series POSRV Options	73
	A. Backflow Preventer	73
	B. Dirty Service Option	74
	C. Dual Pilots	76
	D. Field Test Connection	76
	E. Filter (Single, Dual, or High Capacity)	76
	F. Gag	77
	G. Heat Exchanger	77
	H. Lifting Lever	78
	I. Manual, Electrical, or Pneumatic Blowdown Valve	78
	J. Pilot Valve Tester	79
	K. Pressure Differential Switch	79
	L. Pressure Spike Snubber	79
	M. Remote Pilot Mounting	80
	N. Remote Sensing	80
	O. Sensing Ring	80
XXIII.	Maintenance Tools and Supplies	81
	A. Adjuster Top Seal Insertion Tool	81
	B. Insert Installation Tool	82
	C. Lapping Tools	83
	D. Disc Holder and Guide Removal and Assembly Tool	84
XXIV.	Replacement Parts Planning	86
	A. Basic Guidelines	86
	B. Identification and Ordering Essentials	86
	C. Positive Identification of Main Valve and Pilot Valve Combinations	87
XXV.	Genuine Dresser Parts	87
XXVI.	Recommended Spare Parts	88
XXVII.	Field Service, Repair, and Training Programs	97
	A. Field Service	97
	B. Factory Repair Facilities	97
	C. Safety Relief Valve Maintenance Training	97
	Sales Office Locations	98

I. Product Safety Sign and Label System

If and when required, appropriate safety labels have been included in the rectangular margin blocks throughout this manual. Safety labels are vertically oriented rectangles as shown in the ***representative examples*** (below), consisting of three panels encircled by a narrow border. The panels can contain four messages which communicate:

- The level of hazard seriousness
- The nature of the hazard
- The consequence of human, or product, interaction with the hazard.
- The instructions, if necessary, on how to avoid the hazard.

The top panel of the format contains a signal word (DANGER, WARNING, CAUTION or ATTENTION) which communicates the level of hazard seriousness.

The center panel contains a pictorial which communicates the nature of the hazard, and the possible consequence of human or product interaction with the hazard. In some instances of human hazards the pictorial may, instead, depict what preventive measures to take, such as wearing protective equipment.

The bottom panel may contain an instruction message on how to avoid the hazard. In the case of human hazard, this message may also contain a more precise definition of the hazard, and the consequences of human interaction with the hazard, than can be communicated solely by the pictorial.

① **DANGER — Immediate hazards which WILL result in severe personal injury or death.**

② **WARNING — Hazards or unsafe practices which COULD result in severe personal injury or death.**

③ **CAUTION — Hazards or unsafe practices which COULD result in minor personal injury.**

④ **ATTENTION — Hazards or unsafe practices which COULD result in product or property damage.**

II. Safety Precautions

Read – Understand – Practice

1. WARNING: Allow the system to cool to room temperature before cleaning servicing or repairing the system. Hot components or fluids can cause severe personal injury or death.
2. WARNING: Always read and comply with safety labels on all containers. Do not remove or deface the container. Do not remove or deface the container labels. Improper handling or misuse could result in severe personal injury or death.
3. WARNING: Never use pressurized fluids/gas/air to clean clothing or body parts. Never use body parts to check for leakage or discharge rates of areas. Pressurized fluids/gas/air injected into or near the body can cause severe personal injury or death.
4. WARNING: It is the responsibility of the owner to specify and provide guarding to protect persons from pressurized or heated parts. Contact with pressurized or heated parts. Contact with pressurized or heated parts can result in severe personal injury or death.
5. WARNING: Do not allow anyone under the influence or intoxicants or narcotics to work on or around pressurized systems. Workers under the influence intoxicants or narcotics are a hazard both to themselves and other employees and can cause severe personal injury or dearth to themselves or others.
6. WARNING: Incorrect service and repair could result in product or property damage or severe personal injury or death.
7. WARNING: This valve product line is not intended for radioactive nuclear applications. Some valve products Manufactured by Dresser Inc. may be used in radioactive environments. Consequently, prior to starting any operation in a radioactive environment, the proper "health physics" procedures should be followed, if applicable.
8. WARNING: Use of improper tools or improper use of right tools could result in personal injury or product or property damage.

II. Safety Precautions (Contd.)

9. WARNING: These WARNINGS are as complete as possible but not all-inclusive. Dresser cannot know all conceivable service methods nor evaluate all potential hazards.

Cautions Concerning Product Warning Labels

1. CAUTION: Heed all service manual warnings. Read installation instructions before installing valve(s).
2. CAUTION: Wear hearing protection when testing or operating valves.
3. CAUTION: Wear appropriate eye and clothing protection.
4. CAUTION: Wear protective breathing apparatus to protect against toxic media.

Note: Any Service questions not covered in this manual should be referred to Dresser's Service Department. Phone: (318) 640-6255.

Restoring Safety

Appropriate service and repair are important to safe, reliable operation of all valve products. Restoration to original quality and manufacturing specifications will accomplish the desired results. Procedures developed by Dresser Inc. as described in the applicable installation and Maintenance Manual, when correctly applied, will be effective.

III. Safety Notice

Proper installation and start-up is essential to the safe and reliable operation of all valve products. The relevant procedures recommended by Dresser Consolidated®, and described in these instructions, are effective methods of performing the required tasks.

It is important to note that these instructions contain various "safety messages" which should be carefully read in order to minimize the risk of personal injury, or the possibility that improper procedures will be followed which may damage the involved Dresser Consolidated® product, or render it unsafe. It is also important to understand that these "safety messages" are not exhaustive. Dresser Consolidated® can not possibly know, evaluate, and advise any customer of all of the conceivable ways in which tasks might be performed, or of the possible hazardous consequences of each way. Consequently, Dresser Consolidated® has not undertaken any such broad evaluation and, thus, anyone who uses a procedure and/or tool, which is not recommended by Dresser Consolidated®, or deviates from Dresser Consolidated® recommendations, must be thoroughly satisfied that neither personal safety, nor valve safety, will be jeopardized by the method and/or tools selected. Contact Dresser Consolidated® at (318) 640-6055 if there are any questions relative to tools/methods.

The installation and start-up of valves and/or valve products may involve proximity to fluids at extremely high pressure and/or temperature. Consequently, every precaution should be taken to prevent injury to personnel during the performance of any procedure. These precautions should consist of, but are not limited to, ear drum protection, eye protection, and the use of protective clothing, (i.e., gloves, etc.) when personnel are in, or around, a valve work area. Due to the various circumstances and conditions in which these operations may be performed on Dresser Consolidated® products, and the possible hazardous consequences of each way, Dresser Consolidated® can not possibly evaluate all conditions that might injure personnel or equipment. Nevertheless, Dresser Consolidated® does offer certain Safety Precautions for customer information only.

It is the responsibility of the purchaser or user of Dresser Consolidated® valves/equipment to adequately train all personnel who will be working with the involved valves/equipment. For more information on training schedules, call (318) 640-6054. Further, prior to working with the involved valves/equipment, personnel who are to perform such work should become thoroughly familiar with the contents of these instructions. Additional copies of these instructions can be purchased, at a minimal cost, by contacting Dresser Consolidated® (in writing) at P.O. Box 1430, Alexandria, LA 71309-1430, or by calling at (318) 640-2250, Fax (318) 640-6325.

IV. Warranty Information

Warranty Statement

Warranty Statement[1]- Dresser® warrants that its products and work will meet all applicable specifications and other specific product and work requirements (including those of performance), if any, and will be free from defects in material and workmanship.

CAUTION: Defective and nonconforming items must be held for Dresser's inspection and returned to the original F.O.B point upon request.

Incorrect Selection or Misapplication of Products- Dresser Consolidated® cannot be responsible for customer's incorrect selection or misapplication of our products.

Unauthorized Repair work- Dresser Consolidated® has not authorized any non-Dresser affiliated repair companies, contractors or individuals to perform warranty repair service on new products or field repaired products of its manufacture. Therefore, customers contracting such repair service on new products or field repaired products of its manufacture. Therefore customers contracting such repair services from unauthorized sources must do at their own risk.

Unauthorized Removal of Seals- All new valves and valves repaired in the field by Dresser Field Service are sealed to assure the customer of our guarantee against defective workmanship. Unauthorized removal and/or breakage of this seal will negate our warranty.

Note 1: Refer to Dresser's Standard Terms of Sale for complete details on warranty and limitation of remedy and liability.

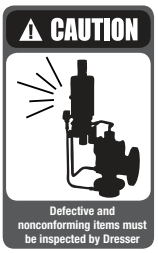

V. Terminology for Pilot Operated Safety Relief Valves

- Accumulation: The pressure increase over the maximum allowable working pressure of the vessel during discharge through the POSRV, expressed as a percentage of that pressure or in actual pressure units.
- Backpressure: The pressure on the discharge side of the POSRV:
  - Built-up Backpressure: Pressure that develops at the valve outlet as a result of flow, after the POSRV has been opened.
  - Superimposed Backpressure: Pressure in the discharge header before the POSRV opens.
  - Constant Backpressure: Superimposed backpressure that is constant with time.
  - Variable Backpressure: Superimposed backpressure that will vary with time.
- Blowdown: The difference between set pressure and reseating pressure of the POSRV, expressed as a percentage of the set pressure or in actual pressure units.
- Cold Differential Set Pressure: The pressure at which the valve is adjusted to open on the test stand. This pressure corrects for backpressure when a pop action pilot's vent is piped to the main valve outlet.
- Differential Between Operating and Set Pressures: Valves in process service will generally give best results if the operating pressure does not exceed 90% of the set pressure. However, on pump and compressor discharge lines, the differential required between the operating and set pressures may be greater because of pressure pulsations coming from a reciprocating piston. The valve should be set as far above the operating pressure as possible.
- Lift: The actual travel of the disc away from the closed position when a valve is relieving.
- Maximum Allowable Working Pressure: The maximum gauge pressure permissible in a vessel at a designated temperature. A vessel may not be operated above this pressure or its equivalent at any metal temperature other than that used in its design. Consequently, for that metal temperature, it is the highest pressure at which the primary pressure POSRV is set to open.
- Operating Pressure: The gauge pressure to which the vessel is normally subjected in service. A suitable margin is provided between operating pressure and maximum allowable working pressure. For assured safe operation, the operating pressure should be at least 10% under the maximum allowable working pressure or 5 psig (0.34 bar), whichever is greater.
- Overpressure: A pressure increase over the set pressure of the primary relieving device. Overpressure is similar to accumulation when the relieving device is set at the maximum allowable working pressure of the vessel. Normally, overpressure is expressed as a percentage of set pressure.
- Pilot Operated Safety Relief Valve (POSRV): A pressure relief valve in which the major relieving device is combined with, and is controlled by, a self-actuated auxiliary pressure relief valve.
- Rated Capacity: The percentage of measured flow at an authorized percent overpressure permitted by the applicable code. Rated capacity is generally expressed in pounds per hour (lb/hr) or kg/hr for vapors, standard cubic feet per minute (SCFM) or m^3/min for gases, and in gallons per minute (GPM) or Liter/min (L/min) for liquids.
- Safety Relief Valve (SRV): An automatic pressure-relieving device used as either a safety or relief valve, depending upon application. The SRV is used to protect personnel and equipment by preventing excessive overpressure.
- Set Pressure: The gauge pressure at the valve inlet, for which the relief valve has been adjusted to open under service conditions. In liquid service, the inlet pressure at which the valve starts to discharge determines set pressure. In gas or vapor service, the inlet pressure at which the valve pops determines the set pressure.

VI. Handling and Storage

Handling

Always keep the inlet flange down on a crated or uncrated flange valve to prevent misalignment and damage to valve internals.

Pilot Operated Safety Relief Valves should be handled carefully. The internal parts of a pilot operated safety relief valve are precision machined and fitted together to maintain perfect alignment. Rough handling may damage the external tubing, pilot, and main valve seats or may cause misalignment sufficient to incur leakage or erratic operation. POSRVs are shipped with a protective covering over the inlet and the outlet flanges. This is to prevent damage to the flanged surfaces and to prevent entry of foreign material into the valve

ATTENTION!

Never lift the full weight of the valve by the pilot assembly, external devices or tubing.

ATTENTION!

Do not rotate the valve horizontally or lift/carry using the pilot assembly.

ATTENTION!

Only lift the valve by the eyebolts inserted into the cover plate.

ATTENTION!

Handle carefully. Do not drop or strike the valve.

Storage

Store POSRVs in a dry environment and protect them from the weather. Do not remove the valve from the skids or crates until immediately before installation. Do not remove flange protectors and seating plugs until the valve is ready to be bolted into place during the installation, i.e., both inlet and outlet.

VII. Pre-Installation and Installation Instructions

Pre-Installation and Installation

CAUTION: After the valve is uncrated and protective devices removed, exercise care to prevent dirt and other foreign matter from entering either the inlet or the outlet port.

Mounting Instructions

CAUTION: Pressure relief valves should be mounted in a vertical, upright position. Installing a valve in any other position will adversely affect its operation in varying degrees as a result of induced misalignment of parts.

No stop valve should be placed between the pressure vessel and its relief valve except as permitted by Code regulations. If a stop valve is located between the pressure vessel and pressure relief valve, its port area should equal or exceed the nominal internal area of the piping from the vessel to the relief valve must not exceed 3% of the valve set pressure when it is flowing at full capacity.

Flanges and gasket surfaces must be free from dirt and debris when valves are installed. The length, size and maximum change in height of the remote sensing line should be verified through analysis, taking into account the requirement to re-charge the dome through the pilot valve. On request, Dresser will assist in the analysis to determine the appropriate length, size and maximum change in height for the sensing line and to determine the correct capacity of the pressure relief valve. Before start-up, be sure all threaded joints are tight and secure.

Hydrostatic Testing

Prior to hydrostatic test of the pressure vessel system, the pilot-operated safety relief valve should be removed and the mounting flange for the valve blocked.

Service Considerations

For best performance, pressure relief valves should be serviced annually unless maintenance history dictates otherwise. They should be located for easy access and removal for service.

Remote Sensing

If the pressure drop between the source of pressure in the equipment to be protected and the pressure at the relief valve inlet exceeds 3%, the sensing line to the pilot valve should be connected directly to the equipment being protected. The optional sensing ring should not be installed. For remote sensing, .375" (9.53 mm) diameter tubing is adequate for distances up to 10 feet, (3.048 m).

For block valve and other special installation features consult API 520 or the factory.

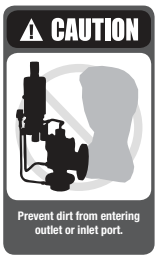

VIII. Introduction

A. General Introduction

A pilot operated pressure relief valve is a pressure relief valve in which the major relieving device is combined with and is controlled by a self actuated auxiliary pressure relief valve.[1]

Note 1: Source ASME Code, Section VIII-Div.1, Paragraph UG-126.

The Consolidated® Modular Pilot Valve (MPV) is designed to provide reliable performance characteristics and stable operation within a pressure range of 15 to 6250 psig (10.34 to 430.92 barg)

B. Main Valve Introduction

The Consolidated® Pilot Operated Safety Relief Valve (POSRV) cast bodies are designed to meet the often specified inlet and outlet connection combinations. Sizes range from 1" - 12" (25.4 mm - 304.80 mm); pressure ratings from 150 - 2500 class. The standard metal seat is the same design that has been successfully utilized in the Consolidated® SRV for over 50 years.

Capacities are certified by National Board of Boiler and Pressure Vessel Inspectors and published in their NB18 entitled "Pressure Relief Device Certifications".

Main Valve Features

- Orifice controlled capacity
- Superior tightness
- Removable nozzles for replacement or remachining
- Standard O-Ring sizes: readily available, easily replaced
- Meets ASME Section VIII, Div. 1
- National Board certified capacities
- Uses many parts standard on 1900 Series SRV

Service and Applications

Main valve pressure and temperature limitations are combined in pressure class categories according to ANSI Standards. Conversely, the pressure and temperature limits of the Pilot Valve are presented separately.

Note: When replacing or repairing the main valve and pilot valve assembly, pay particular attention to the pressures and temperature limitations for both the main valve and pilot valve to ensure compatibility.

C. Pilot Valve Introduction

Standard pilot construction consists of 316SS parts with Nitrile O-Rings with Teflon® based seals throughout. Standard Steam and High Temperature Pilot Construction consists of 316SS parts with Teflon® O-Rings and seals. Alternate materials can be provided by contacting the factory.

Pilot Valve Features

- One pilot fits all main valves
- Standard O-Ring seals
- Superior seat tightness
- Accurate adjustment of blowdown and set point
- Positive closure after blowdown
- Reduces icing and clogging
- Field test connection
- Remote Sensing
- External blowdown adjustments

Table 1: Service and Applications

Model	Service	Pressure Range				Temperature Range			
		min.		max.		min.		max.	
		psig	barg	psig	barg	°F	°C	°F	°C
39PV07, GS, SS, or LA	Gas, Air, Steam or Liquid	15	1.03	750	51.71	-40	-40.0	505	262.8
39MV07 GS or SS	Gas, Air or Steam	15	1.03	750	51.71	-40	-40.0	505	262.8
39MV07 LS	Liquid	15	1.03	750	51.71	-40	-40.0	505	262.8
39PV37 GS, SS, or LA	Gas, Air, Steam or Liquid	751	51.78	3750	258.55	-40	-40.0	505	262.8
39MV22 GS or SS	Gas, Air or Steam	751	51.78	3750	258.55	-40	-40.0	505	262.8
39MV22 LA	Liquid	751	51.78	3750	258.55	-40	-40.0	505	262.8
39MV72 GS, SS or LA	Gas, Air, Steam or Liquid	3751	258.62	6250	430.92	-40	-40.0	505	262.8

Note: With the installation of the heat exchanger, temperature range may be expanded to -450°F to 1200°F. (-267.8°C to 648.9°C)

IX. Consolidated® 2900 Series Pilot Operated Safety Relief Valves

A. Metal Seat Valve

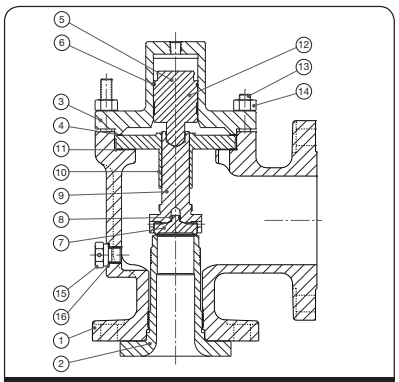

Figure 1: Main Valve Construction - Metal Seat

B. Soft Seat Valve

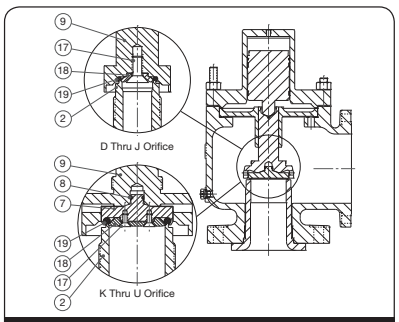

Figure 2: Main Valve Construction - Soft Seat

Part No.	Nomenclature
1	Base
2	Nozzle
3	Coverplate
4	Coverplate Gasket
5	Main Valve Piston
6	Main Valve Piston O-Ring
7	Disc
8	Disc Retainer
9	Disc Holder
10	Guide
11	Guide Gasket
12	Guide Ring(s)
13	Stud (Base)
14	Nut (Base)
15	Plug Adaptor
16	Plug Adaptor Gasket
17	O-Ring Retainer Lock Screw
18	O-Ring Retainer
19	O-Ring Seat Seal

IX. (Contd.)

C. D - U Orifice (with Bellows)

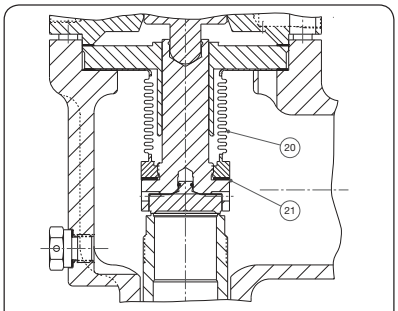

Figure 3: Main Valve Construction - Bellows (D-U orifices)

D. V & W Orifice (with Bellows)

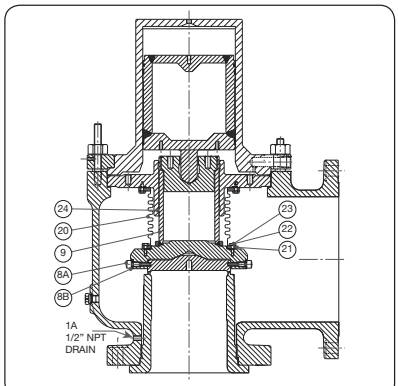

Figure 4: Main Valve Construction - Bellows (V&W orifices)

Part No.	Nomenclature
20	Bellows Assembly
21	Bellows Gasket
8A	Disc Retainer Screws
8B	Retainer Screw Lock Washer
9	Disc Holder Assembly
20	Bellows Assembly
21	Bellows Gasket
22	Bellows Bolts
23	Bellows Bolts Lock Washers
24	Guide Ring (Guide)
25	Bug Screen (Not Shown)

IX. (Contd.)

E. 39PV07/37 Pilot Valves (Standard Service)

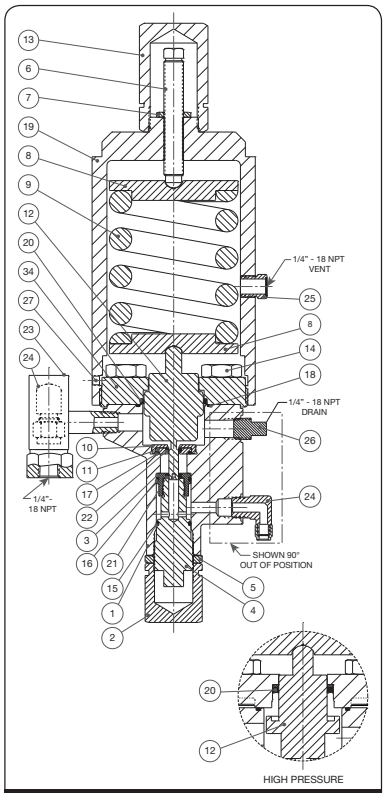

Figure 5: 39PV07/37 Pilot Valve Construction

Part No.	Nomenclature
1	Main Base
2	Adjuster Cap
3	Adjuster Top
4	Adjuster Bottom
5	Adjuster Lock Nut
6	Compression Screw
7	Compression Screw Lock Nut
8	Spring Washer
9	Spring
10	Insert Top
11	Insert Bottom
12	Main Piston
13	Cap (Compression Screw)
14	Cap Screw (Top Plate)
15	O-Ring (Adjuster Bottom)
16	O-Ring (Adjuster Top)
17	O-Ring (Insert)
18	O-Ring (Top Plate)
19	Bonnet
20	Spring Seal (Main Piston)
21	Spring Seal (Adjuster Top)
22	Spring Seal (Insert)
23	Field Test Connector
24	Vent Assembly/Bug Screen (Field Test Connection)
25	Vent Assembly (Bonnet Vent)[1]
26	Pipe Plug (Pilot Valve)
27	Set Screw (Bonnet)
34	Top Plate
35	Plug Filter (Used in Sensing Tube When Equipped) (Not Shown)

Note 1: Standard material is a filter plug. For special materials, vent assembly is supplied.

IX. (Contd.)

F. 39MV07 Pilot Valve (Standard Service)

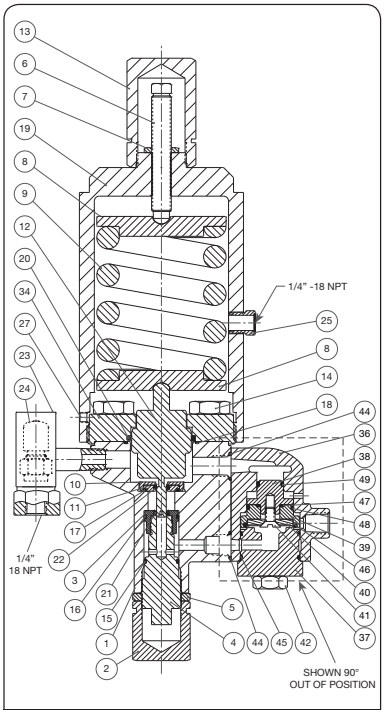

Figure 6: 39MV07 Pilot Valve Construction

Part No.	Nomenclature
1	Main Base
2	Adjuster Cap
3	Adjuster Top
4	Adjuster Bottom
5	Adjuster Lock Nut
6	Compression Screw
7	Compression Screw Lock Nut
8	Spring Washer
9	Spring
10	Insert Top
11	Insert Bottom
12	Main Piston
13	Cap (Compression Screw)
14	Cap Screw (Top Plate)
15	O-Ring (Adjuster Bottom)
16	O-Ring (Adjuster Top)
17	O-Ring (Insert)
18	O-Ring (Top Plate)
19	Bonnet
20	Spring Seal (Main Piston)
21	Spring Seal (Adjuster Top)
22	Spring Seal (Insert)
23	Field Test Connector
24	Vent Assembly/Bug Screen (Field Test Connection)
25	Vent Assembly (Bonnet Vent)[1]
27	Set Screw (Bonnet)
34	Top Plate
35	Plug Filter (Used in Sensing Tube When Equipped) (Not Shown)
36	Modulator Base
37	Modulator Stop
38	Modulator Piston Top
39	Modulator Piston Bottom
40	O-Ring Retainer
41	Lock Screw (Retainer)
42	Cap Screw (Modulator)
43	Socket Head Cap Screw (Modulator)
44	O-Ring (Modulator Base)
45	O-Ring (Modulator Stop)
46	O-Ring (Modulator Seat)
47	O-Ring (Modulator Piston Bottom)
48	Spring Seal (Piston Bottom)
49	Spring Seal (Piston Top)

Note 1: Standard material is a filter plug. For special materials, vent assembly is supplied.

IX. (Contd.)

G. 39MV22/72 Pilot Valve (Standard Service)

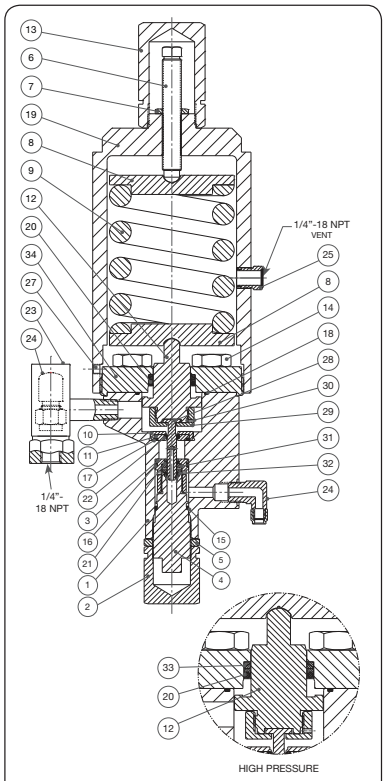

Figure 7: 39MV22/72 Pilot Valve Construction

Part No.	Nomenclature
1	Main Base
2	Adjuster Cap
3	Adjuster Top
4	Adjuster Bottom
5	Adjuster Lock Nut
6	Compression Screw
7	Compression Screw Lock Nut
8	Spring Washer
9	Spring
10	Insert Top
11	Insert Bottom
12	Main Piston
13	Cap (Compression Screw)
14	Cap Screw (Top Plate)
15	O-Ring (Adjuster Bottom)
16	O-Ring (Adjuster Top)
17	O-Ring (Insert)
18	O-Ring (Top Plate)
19	Bonnet
20	Spring Seal (Main Piston)
21	Spring Seal (Adjuster Top)
22	Spring Seal (Insert)
23	Field Test Connector
24	Vent Assembly/Bug Screen (Field Test Connection)
25	Vent Assembly (Bonnet Vent)[1]
27	Set Screw (Bonnet)
28	Piston Nose
29	Piston Retainer Nut
30	Set Screw (Piston)
31	Vent Seal (Adaptor)
32	Spring Seal (Vent Seal Adaptor)
33	Back-up Ring (39MV72 Only)
34	Top Plate
35	Plug Filter (Used in Sensing Tube When Equipped) (Not Shown)

Note 1: Standard material is a filter plug. For special materials, vent assembly is supplied.

X. Operating Principles

A. 2900 Series with Type 39PV (Pop) Pilot Operational Descriptions

PV Valve Closed (Normal Position)

System pressure from the main valve inlet is fed to the dome by the pilot through interconnecting tubing. This equalizes the pressure on the top of the piston with inlet pressure on the seating surface (bottom) of the disc. Since the area of the top of the piston is larger than the area of the seating surface, the differential area results in a net downward force keeping the main valve tightly closed.

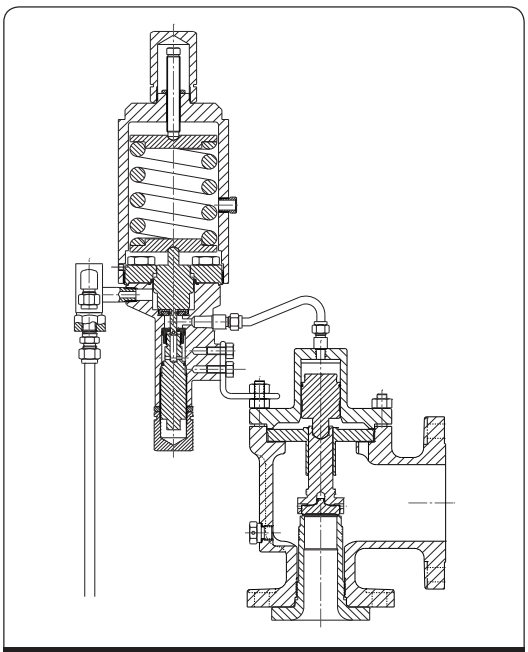

Figure 8: PV Valve Closed (Normal Position)

X. Operating Principles (Contd.)

A. 2900 Series with Type 39PV (Pop) Pilot Operational Descriptions (Contd.)

PV Valve OPEN (Relieving Position)

As inlet pressure increases, the pilot piston strokes and seals off the main valve inlet pressure from the dome pressure. The pilot simultaneously opens the vent seal to relieve the dome pressure to atmospheric pressure. The main valve disc is allowed to lift off the seat as the fluid force overcomes the now removed pressure load above the main valve piston. The valve discharges to relieve system pressure.

When the discharging main valve reduces the inlet pressure to the preset blowdown pressure of the pilot, the pilot piston closes the vent seal. Simultaneously, the inlet seal is reopened in the pilot. The main valve inlet pressure is again allowed to enter the dome above the main valve piston. As the dome pressure equalizes with the inlet pressure, the downward force created by the differential areas of the piston and disc closes the main valve.

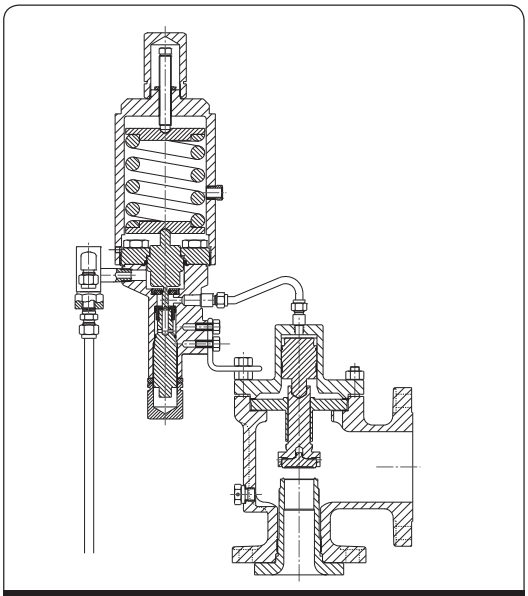

Figure 9: PV Valve OPEN (Relieving Position)

X. Operating Principles (Contd.)

B 2900 Series 39MV07 (Modulating) Pilot – Operational Description

MV07 Valve Closed (Normal Position)

System pressure from the main valve inlet is fed to the dome by the pilot through interconnecting tubing. This equalizes the pressure on the top of the piston with inlet pressure on the seating surface (bottom) of the disc. Since the area of the top of the piston is larger than the area of the seating surface, the differential area results in a net downward force keeping the main valve tightly closed.

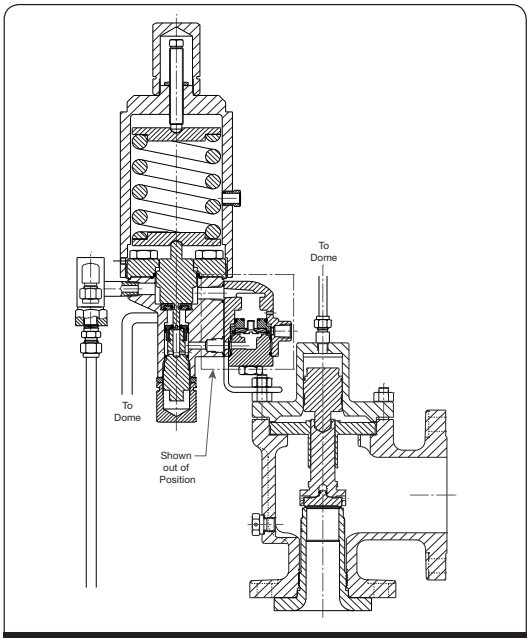

Figure 10: MV07 Valve Closed (Normal Position)

X. Operating Principles (Contd.)

B. 2900 Series 39MV07 (Modulating) Pilot – Operational Description (Contd.)

MV07 Valve Modulating (Partial Relieving Position)

As inlet pressure increases, the pilot piston strokes and seals off the main valve inlet pressure from the dome pressure. The pilot simultaneously opens the vent seal to relieve the dome pressure to the bottom of the modulator piston. The modulator piston has a differential area with the smaller area being on top of the modulator piston. The top of this piston always sees the main valve inlet pressure. When the dome pressure is applied to the bottom of the modulator piston, there is a net upward force. This is due to both pressures being equal (at this point), and the lower area being larger than the upper area. The modulator relieves the pressure from the dome to the atmosphere until force from the inlet pressure on top of the modulator piston is sufficient to move it to the closed position. A certain amount of pressure remains in the dome. This pressure is controlled by the differential area in the modulator. Since the dome pressure has not been dropped to atmospheric pressure, the main valve only partially opens at the set point. The modulator piston will remain closed until the main valve disc is forced into higher lift by increasing inlet pressure. As this occurs, the modulator piston may relieve further pressure from the dome as necessary to achieve the required main disc lift within 10% overpressure.

MV07 Fully Open (Full Relieving Position)

As the inlet pressure increases further, the net upward force on the main valve disc increases, allowing the main valve to relieve more pressure. The disc obtains full lift (full capacity) within 10% of set pressure. When the discharging valve reduces the inlet pressure to the preset blowdown pressure of the pilot, the pilot piston closes the vent seal. Simultaneously, the inlet seal is reopened in the pilot. The main valve inlet pressure is again allowed to enter the dome above the main valve piston. As the dome pressure equalizes with the inlet pressure, the downward force created by the differential areas of the piston and disc closes the main valve.

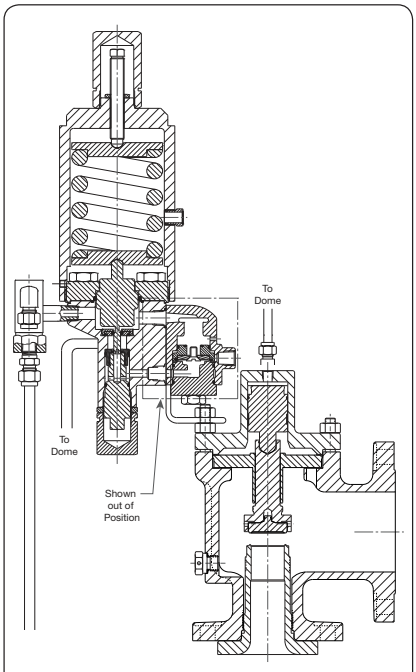

Figure 11: MV07 Valve Modulating (Partial Relieving Position)

XI. General Planning for Maintenance

A 12 month maintenance interval is recommended for general service conditions. For severe service applications, a 3 to 6 month inspection and test interim may be more appropriate. The specific plant's operating and service history will better determine this frequency. Dresser encourages preventive maintenance.

The 2900 series Pilot Operated Safety Relief Valve (POSRV) is easily maintained. Normal maintenance usually involves:

- Removal of pilot valve from main valve
- Disassembly of both the pilot and main valve
- Cleaning
- Component Inspection
- Parts Replacement as Needed
- Reassembly
- Setting, Testing and Resealing the Valve

Occasionally, remachining the nozzle may be necessary to extend the service life of the valve. Keep all parts for each valve separated to ensure replacement in the same valve.

Note: Insure there is no pressure in the inlet of the valve before attempting to remove it from the piping system.

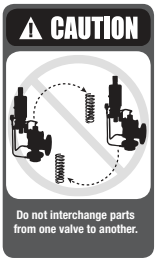

XII. Recommended Installation Practices

A. Mounting Position

The POSRVs should be mounted in a vertical upright position (in accordance with API RP 520). Installing a pilot operated safety relief valve in any position other than vertical (±1 degree) will adversely affect its operation as a result of induced misalignment of moving parts.

A stop valve may be placed between the pressure vessel and its relief valve only as permitted by code regulations. If a stop valve is located between the pressure vessel and POSRV, the stop valve port area should equal or exceed the nominal internal area associated with the pipe size of the POSRV inlet. The pressure drop from the vessel to the POSRV shall not exceed 3% of the valve's set pressure, when flowing at full capacity.

Ensure the flanges and sealing faces of the valve and connective piping are free from dirt, sediment, and scale.

Ensure all flange bolts are drawn evenly to prevent distortion of the valve body and the inlet nozzle.

Position the POSRVs for easy access and/or removal so that servicing can be properly performed. Ensure sufficient working space is provided around and above the valve.

XII. Recommended Installation Practices (Contd.)

B. Inlet Piping

The inlet piping (Figure 12) to the valve should be short and direct from the vessel, or equipment, being protected. The radius of the connection to the vessel should permit smooth flow to the valve. Avoid sharp corners. If this is not practical, then the inlet should be at least one additional pipe diameter larger. The pressure drop from the vessel to the valve shall not exceed 3% of valve set pressure when the valve is allowing full capacity flow. The inlet piping should never be smaller in diameter than the inlet connection of the valve. Excessive pressure drop in gas, vapor, or flashing- liquid service at the inlet of the POSRV will cause extremely rapid opening and closing of the valve, which is known as "chattering". Chattering will result in lowered capacity and damage to the seating surfaces. The most desirable installation is that in which the nominal size of the inlet piping is the same as, or greater than, the nominal size of the valve inlet flange; and in which the length does not exceed the face-to-face dimensions of a standard tee of the required pressure class.

Do not locate POSRV inlets where excessive turbulence is present, such as near elbows, tees, bends, orifice plates or throttling valves.

Section VIII of the ASME Boiler and Pressure Vessel Code requires the inlet connection design to consider stress conditions during valve operation, caused by external loading, vibration, and loads due to thermal expansion of the discharge piping.

The determination of reaction forces during valve discharge is the responsibility of the vessel and/or piping designer. Dresser publishes certain technical information about reaction forces under various fluid flow conditions, but assumes no liability for the calculations and design of the inlet piping.

External loading, by poorly designed discharge piping and support systems, and forced alignment of discharge piping can cause excessive stresses and distortions in the valve as well as the inlet piping. The stresses in the valve may cause a malfunction or leak. Therefore, discharge piping must be independently supported and carefully aligned.

Vibrations in the inlet piping systems may cause valve seat leakage and/or fatigue failure. These vibrations may cause the disc seat to slide back and forth across the nozzle seat and may result in damage to the seating surfaces. Also, vibration may cause separation of the seating surfaces and premature wear to valve parts. High-frequency vibrations are more detrimental to POSRV tightness than low-frequency vibrations. This effect can be minimized by providing a larger difference between the operating pressure of the system and the set pressure of the valve, particularly under high frequency conditions.

Temperature changes in the discharge piping may be caused by fluid flowing from the discharge of the valve or by prolonged exposure to the sun or heat radiated from nearby equipment. A change in the discharge piping temperature will cause a change in the length of the piping, which may cause stresses to be transmitted to the POSRV and its inlet piping. Proper support, anchoring or provision for flexibility of the discharge piping can prevent stresses caused by thermal changes. Do not use fixe supports.

C. Outlet Piping

Alignment of the internal parts of the POSRV is important to ensure proper operation (see Figure 13). Although the valve body will withstand a considerable mechanical load, unsupported discharge piping consisting of more than a companion flange long-radius elbow, and a short

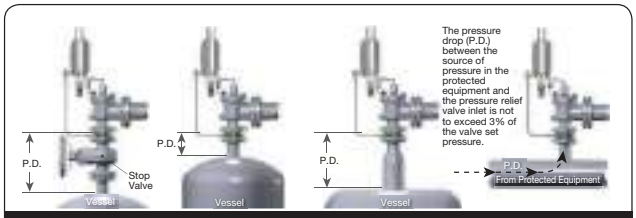

Figure 12: Pressure Drop on the Inlet Piping

XII. Recommended Installation Practices (Contd.)

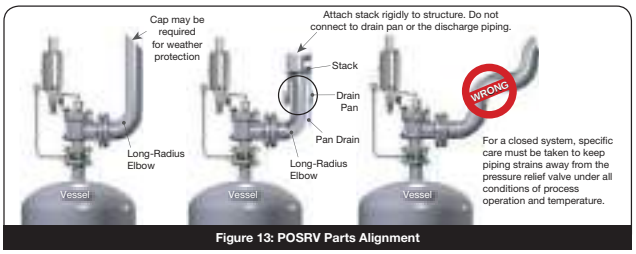

Figure 13: POSRV Parts Alignment

vertical pipe is not recommended. Use spring supports to connect outlet piping to prevent thermal expansion from creating strains on the valve. The discharge piping should be designed to allow for vessel expansion as well as expansion of the discharge pipe itself. This is particularly important on long distance lines.

A continual oscillation of the discharge piping (wind loads) may induce stress distortion in the valve body. The resultant movement of the valve's internal parts may cause leakage.

Where possible, use properly supported drainage piping to prevent the collection of water or corrosive liquid in the valve body.

In every case, the nominal discharge pipe size should be at least as large as the nominal size of the POSRV outlet flange In the case of long discharge piping, the nominal discharge pipe size must sometimes be much larger.

D. Remote Sensing

If the pressure drop between the source of pressure in the equipment to be protected and the pressure at the relief valve inlet exceeds 3%, the sensing line to the pilot valve should be connected directly to the equipment being protected. The optional sensing ring should not be installed. For remote sensing, .375" (9.53 mm) diameter tubing is adequate for distances up to 10 feet, (3.048 m). If distance is longer than 10 feet (3.048 m), please contact Dresser Application Engineering.

ATTENTION!

Change in elevation between relief valve and source of sensing line may cause set pressure changes.

For block valve and other special installation features consult API 520 or the factory.

E. Freeze Protection

Type of Applications:

1. Applications where the process media, in the liquid state, has a freezing point between the ambient temperature limits of the local region.
2. Steam service applications where the pilot operated valve is exposed to the climate, extreme cold ambient temperatures.

   Example: the condensed steam in the pilot and tubing may become frozen.

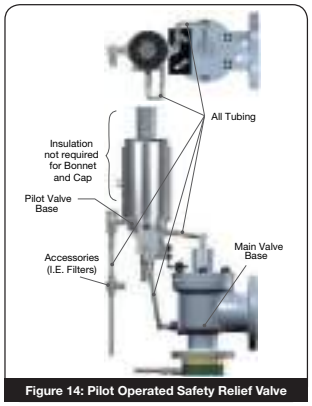

Figure 14: Pilot Operated Safety Relief Valve

XII. Recommended Installation Practices (Contd.)

3. Applications where the process media is temperature sensitive to thick formations.

   Example: Hydrocarbon applications where the possibility of hydrate formation may occur.

Reasons for Freeze Protection:

1. If the pilot sensing line becomes clogged or frozen, then system pressure can be isolated from the pilot valve. This will not allow the pilot to detect system pressure, open and relieve the overpressure situation.

   Recommendations for insulating and heat tracing pilot operated safety relief valve: Types of freeze protection:

   a. Insulation by fiberglass blankets or wrap.
   b. Heat tracing with electrical heat tape.
   c. Radiant heat sources, such as a heat lamp.

For applications where heat tracing or radiant heaters are used, the temperature should be limited to approximately 200°F (93.3°C) so that the elastomers are not damaged. Higher temperatures may be allowed upon review of the application.

Valve illustrations showing acceptable locations for insulation are shown in Figures 14 and 15. Figure 14 shows a standard pilot operated relief valve. Figure 15 shows a pilot operated relief valve equipped with a heat exchanger.

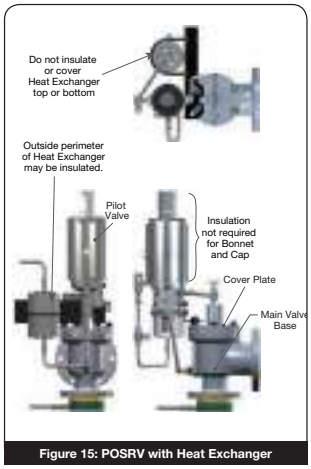

Figure 15: POSRV with Heat Exchanger

XIII. Disassembly of the 2900 POSRV

A. Removal of Pilot Valve from Main Valve

1. Make sure there is no media pressure in the vessel, in the valve inlet, in the main valve, or in the pilot valve.
2. Disconnect the Sensing Tube, Dome Tube and Discharge Line from the Pilot Valve.
3. All other external attachments should be removed to free the Pilot Valve for Disassembly.
4. Loosen and remove the two cap bolts holding the pilot valve to the mounting bracket.
5. Place parts in the order they are disassembled to facilitate reassembly.

B. Disassembly of Main Valve

Note: If the pilot valve has not been removed, then refer to Section XIII.A.

1. If applicable, remove sensing tube fitting from Sensing Tube
2. Remove and discard Plug Filter from Sensing Tube (if applicable).
3. Loosen and remove the Stud Nuts on the Cover Plate.
4. Remove the Bracket.
5. Install 1/4" MNPT pipe plug into Cover Plate where dome line is installed. Pipe plug will prevent Main Valve Piston from falling out of Cover Plate when the assembly is removed.
6. Remove Cover Plate and Main Valve Piston assembly from Base.

ATTENTION!

If Main Valve Piston O-Ring or Spring Energize Seal is damaged, then Main Valve Piston may fall out of Cover Plate during disassembly.

7. Remove pipe plug from Cover Plate.
8. Remove the Main Valve Piston from the Cover Plate using a dowel pressed through the center hole in the top of the Cover Plate.

XIII. Disassembly of the 2900 POSRV (Contd.)

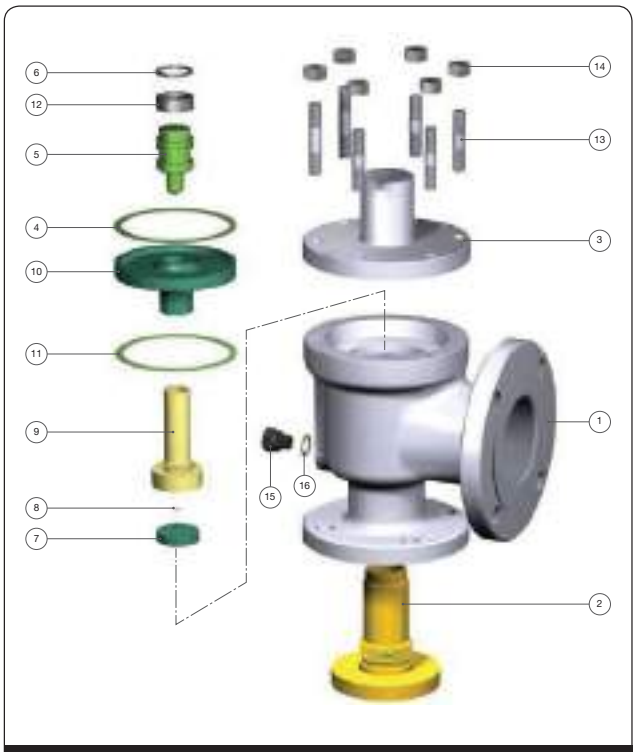

Figure 16: Conventional Metal Seat Valve Disassembly

XIII. Disassembly of the 2900 POSRV (Contd.)

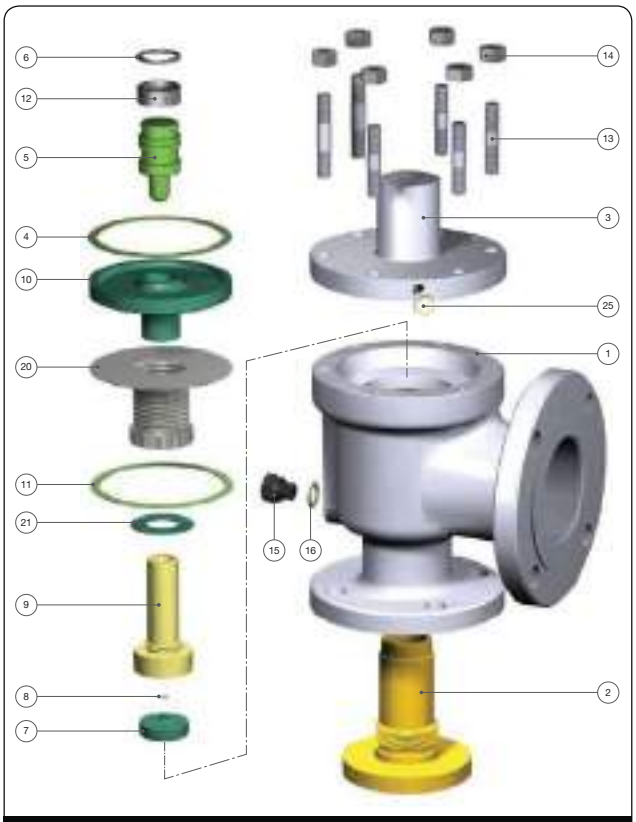

Figure 17: Bellows Metal Seat Valve Disassembly

XIII. Disassembly of the 2900 POSRV (Contd.)

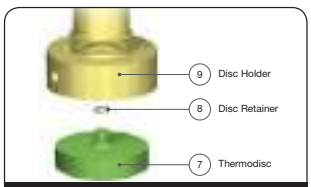

Figure 18: Thermodisc

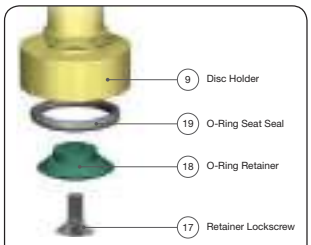

Figure 19: O-Ring Seat (D-J Orifices)

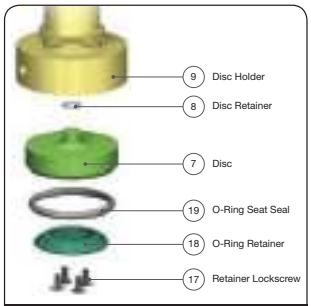

Figure 20: O-Ring Seat (K -W Orifices)

9. Remove the Cover Plate Gasket.
10. For "D" through "N" orifice, removed Disc Holder and Guide.

    For "P" through "U" orifices, install the Disc Holder Removal Tool (Dresser P/N 4464604) in the top of the Disc Holder as shown in Figure 21. Lift out and remove the Guide and Disc Holder. Remove the Lifting Tool from the top of the Disc Holder.

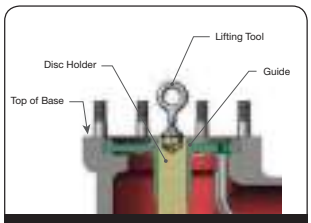

Figure 21: Disc Holder Removal Tool (P-U)

On "V" and "W" orifice valves thread two 5/8-11 NC Standard Eye Bolts into the top of the Disc Holder as shown in Figure 22. Lift out and remove the Guide and Disc Holder. Remove the Eye Bolts from the top of the Disc Holder.

11. Lift the Guide off the Disc Holder. If the valve has a Bellows avoid damage to the gasket seating surfaces, and if present the convolutions or the

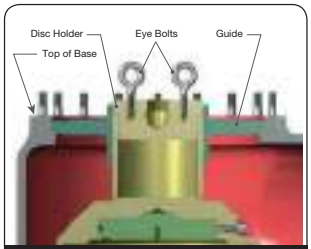

Figure 22: Disc Holder Removal Tool (V & W)

XIII. Disassembly of the 2900 POSRV (Contd.)

flange section of the Bellows.

12. For D through U orifice bellows valves, the bellows is attached to the disc holder by right-hand threads. Use a special spanner wrench on the bellows ring to remove it by turning counterclockwise (Figure 23).

    For V and W orifice bellows valves, the bellows is

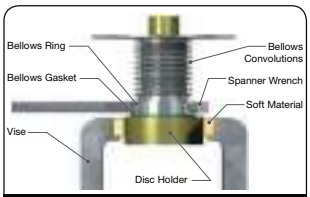

Figure 23: Removal of Bellows Ring

bolted to the disc holder. Remove these bolts to disassemble the bellows from the disc holder.

ATTENTION!

The bellows convolutions are very thin and fragile. Take care to protect them from damage.

13. Remove the bellows gasket.
14. Follow the procedure appropriate to the orifice valve type:
    - For D through U orifice valves, remove the disc from the disc holder as follows:
      - Clamp the stem portion of the disc holder , disc end up, firmly between two wooden V-blocks in a vise.
      - Start inserting special drift pins into the holes in the disc holder (Figure 24) with the tapered portion of the pins working against the top of the disc, as indicated. See Figure 82 and Table 19 in the Maintenance Tools and Supplies section for drift pin size.

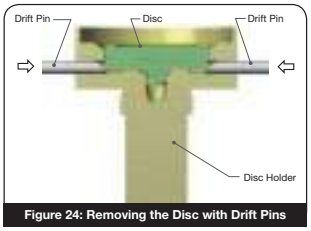

Figure 24: Removing the Disc with Drift Pins

      - Use a light machinist hammer to tap each pin alternately until the disc snaps out of the recess in the disc holder.
    - For V and W orifice valves, remove the disc from the disc holder as follows:
      - Turn the disc holder on its side.
      - Remove the retaining bolts.
      - Attach the lifting lug to the disc and lift out.
15. For O-Ring seat seal valves only, remove the Retainer Lock Screw(s), O-Ring Retainer, and O-Ring Seat Seal.
16. The nozzle is threaded onto the base and is removed by turning it counterclockwise (from right to left). Before removing the nozzle, soak the threaded joint with a suitable penetrating liquid or solvent. If the nozzle is frozen to the base, apply dry ice or other cooling medium to the inside of the nozzle and heat the base from the outside with a blowtorch in the area of the nozzle threads.

ATTENTION!

Should heat be applied, use care to prevent cracking of cast parts.

17. Using a three- or four-jaw chuck welded vertically to a stand bolted to a concrete floor, clamp the nozzle into the chuck and break the body loose with a heavy rod or pipe (Figure 26).

XIII. Disassembly of the 2900 POSRV (Contd.)

ATTENTION!

Exercise care when inserting a rod or pipe in the outlet. Ensure the valve nozzle is not damaged during the operation.

18. Use a large pipe wrench on the nozzle flange to remove the nozzle from the base (Figure 25).

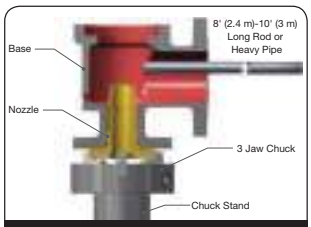

Figure 25: Loosening the Nozzle from the Base

ATTENTION!

The nozzle is normally removed for routine maintenance and service.

19. Remove the Nozzle from the Valve Base as suggested in Figure 25, or by using a Hex wrench or a pipe wrench on the flange as indicated in Figure 26.

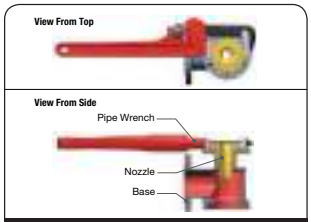

Figure 26: Removing the Nozzle from the Base

20. The Main valve is ready for cleaning, inspection and refurbishing.
21. Discard all O-Rings, guide rings, and seals.

C. Cleaning

1. Clean parts to remove all rust, burrs, scale, organic matter, and loose particles. Parts are to be free of any oil or grease except for lubrication as specified in this instruction.
2. Cleaning agents used shall be such that effective cleaning is assured without injuring the surface finishes or material properties of the part.
3. Acceptable cleaning agents include demineralized water, nonphosphate detergent, acetone, and isopropyl alcohol. Parts must be blown dry or wiped dry after cleaning.
4. If you are using cleaning solvents, take precautions to protect yourself from potential danger from breathing fumes, chemical burns, or explosion. See the solvent's Material Safety Data Sheet for safe handling recommendations and equipment.
5. Do not "sand blast" internal parts as it can reduce the dimensions of the parts.

XIV. Maintenance Instructions

A. General Maintenance Information

After the valve has been disassembled, a close inspection should be made of the seating surfaces. In a majority of cases, a simple lapping of seats is all that is necessary to put the valve in first class working order. If an inspection of the parts shows the valve seating surfaces to be badly damaged, machining will be required before lapping. O-Ring seat seal valve nozzles can only be reconditioned by machining, not lapping. (For specific information concerning the machining of nozzle and disc seating surfaces, see The Re-Machining Nozzle Seats and Bores and Re-Machining the Disc Seat sections.)

The seating surfaces of the metal seated Consolidated® Safety Relief Valve are flat. The nozzle seat is relieved by a 5° angle on the outside of the flat seat. The disc seat is wider than the nozzle seat; thus, the control of seat width is the nozzle seat (see Figure 27).

Reconditioning of the seating surfaces of the nozzle and disc is accomplished by lapping with a cast iron lap, and lapping compound.

Anytime the V or W orifice valve is disassembled, be sure to inspect the Guide Rings for wear. If worn, replace before reassembly.

ATTENTION!

In order to establish leak free valve seats, the nozzle seating surface and the disc seating surface must be lapped flat.

B. O-Ring Seat

The nozzle must not have any defects to prohibit the O-Ring from sealing properly, especially the OD of the seat where the surface must maintain a minimum of 32 RMS finish. See Figure 27 and Table 2 for reworking O-Ring Nozzle.

The O-Ring Retainer must also maintain a flat surface for it to sit on the Nozzle. Only polishing of surface can be done since material removal from this surface will cause the Nozzle to over engage O-Ring. Polishing paper or some other light abrasive can only be used since the part cannot function properly if its overall dimensions are changed significantly. If significant corrosion or damage has occurred on O-Ring retainer, discard and replace.

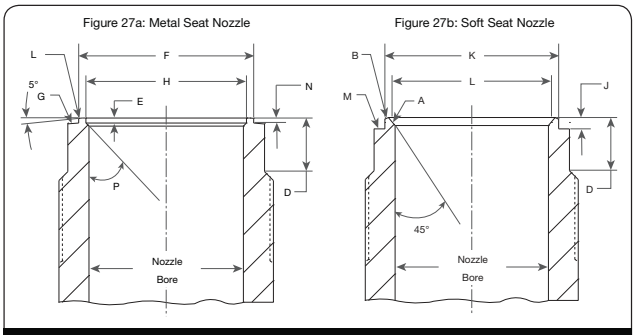

Figure 27: Main Valve Nozzle Critical Dimensions

XIV. Maintenance Instructions (Contd.)

Table 2: Nozzle Critical Dimensions

Orifice	Nozzle Bore min. in.	Nozzle Bore min. mm	Nozzle Bore max. in.	Nozzle Bore max. mm	D min.[1] in.	D min.[1] mm	E ± .005" (0.13 mm) in.	E ± .005" (0.13 mm) mm	F in.	F mm.	H in.	H mm.
D	.402	10.21	.409	10.39	.313	7.95	.030	0.76	.954± .001	24.23± 0.03	.831± .001	21.11± 0.03
E	.539	13.69	.544	13.82	.313	7.95	.030	0.76	.954± .001	24.23± 0.03	.831± .001	21.11± 0.03
F	.674	17.12	.679	17.25	.313	7.95	.030	0.76	.954± .001	24.23± 0.03	.831± .001	21.11± 0.03
G	.864	21.95	.869	22.07	.313	7.95	.035	0.89	1.093± .001	27.76± 0.03	.953± .001	24.21± 0.03
H	1.078	27.38	1.083	27.51	.250	6.35	.035	0.89	1.224± .001	31.09± 0.03	1.123± .001	28.52± 0.03
J	1.380	35.05	1.385	35.18	.375	9.53	.035	0.89	1.545± .001	39.24± 0.03	1.435± .001	36.45± 0.03
K	1.650	41.91	1.655	42.04	.438	11.13	.063	1.60	1.836± .002	46.63± 0.05	1.711± .002	43.46± 0.05
L	2.055	52.20	2.060	52.32	.438	11.13	.063	1.60	2.257± .002	57.33± 0.05	2.133± .002	54.18± 0.05
M	2.309	58.65	2.314	58.78	.438	11.13	.063	1.60	2.525± .002	64.14± 0.05	2.400± .002	60.96± 0.05
N	2.535	64.39	2.540	64.52	.500	12.70	.063	1.60	2.777± .002	70.54± 0.05	2.627± .002	66.73± 0.05
P	3.073	78.05	3.078	78.18	.625	15.88	.093	2.36	3.332± .002	84.63 0.05	3.182± .002	80.82± 0.05
Q	4.045	102.74	4.050	102.87	.875	22.23	.093	2.36	4.335± .003	110.11± 0.08	4.185± .003	106.30± 0.08
R	4.867	123.62	4.872	123.75	1.000	25.40	.093	2.36	5.110± .003	129.79± 0.08	4.960± .003	125.98± 0.08
T	6.202	157.53	6.208	157.68	.750	19.05	.093	2.36	6.510± .003	165.35± 0.08	6.315± .003	160.40± 0.08
U	6.685	169.80	6.691	169.95	.750	19.05	.093	2.36	6.993± .003	177.62± 0.08	6.798± .003	172.67± 0.08
V	8.000	203.20	8.005	203.33	1.250	31.75	.250	6.35	8.816± .005	223.93± 0.13	8.336± .005	211.73± 0.13
W	10.029	254.74	10.034	254.86	1.750	44.45	.350	8.89	11.058± .005	280.87± 0.13	10.458± .005	265.63± 0.13

Note 1: Do not remachine threaded areas of the nozzle to reestablish "D" Dimension. Once "D" minimum is reached, replacement of nozzle is necessary.

Table 2: Nozzle Critical Dimensions (Contd.)

Orifice	N in.	N mm	P ±0.5°	Radius B ± .001" (0.03 mm) in.	Radius B mm	J ± .005" (0.13 mm) in.	J mm	K in.	K mm	L in.	L mm
D	$.038^{+.002}_{-.003}$	$0.97^{+0.05}_{-0.08}$	30°	.016	0.41	.079	2.01	0.867±.001	22.02±0.03	.813±.001	20.65 ±0.03
E	$.038^{+.002}_{-.003}$	$0.97^{+0.05}_{-0.08}$	30°	.016	0.41	.079	2.01	0.867±.001	22.02±0.03	.813±.001	20.65 ±0.03
F	$.038^{+.002}_{-.003}$	$0.97^{+0.05}_{-0.08}$	30°	.016	0.41	.079	2.01	0.867±.001	22.02±0.03	.813±.001	20.65 ±0.03
G	$.038^{+.002}_{-.003}$	$0.97^{+0.05}_{-0.08}$	30°	.022	0.56	.090	2.29	$1.058^{+.002}_{-.001}$	$26.87^{+0.05}_{-0.03}$	.998±.001	25.35 ±0.03
H	$.035^{+.002}_{-.003}$	$0.89^{+0.05}_{-0.08}$	45°	.022	0.56	.060	1.52	$1.214^{+.002}_{-.001}$	$30.84^{+0.05}_{-0.03}$	$1.165^{+.002}_{-.001}$	$29.59^{+0.05}_{-0.03}$
J	.035 ±.005	0.89 ±0.13	45°	.022	0.56	.074	1.88	$1.532^{+.002}_{-.001}$	$38.91^{+0.05}_{-0.03}$	$1.479^{+.002}_{-.001}$	$37.57^{+0.05}_{-0.03}$
K	.063 ±.005	1.60 ±0.13	45°	.022	0.56	.126	3.20	1.836±.002	46.63±0.05	$1.780^{+.001}_{-.002}$	$45.21^{+0.03}_{-0.05}$
L	.063 ±.005	1.60 ±0.13	45°	.017	0.43	.126	3.20	2.206±.002	56.03±0.05	2.156±.002	54.76 ±0.05
M	.063 ±.005	1.60 ±0.13	45°	.022	0.56	.126	3.20	2.534±.002	64.36±0.05	2.478±.002	62.94 ±0.05
N	.063 ±.005	1.60 ±0.13	45°	.022	0.56	.101	2.57	2.706±.002	68.73±0.05	2.650±.002	67.31 ±0.05
P	.093 ±.005	2.36 ±0.13	45°	.022	0.56	.150	3.81	3.332±.002	84.63±0.05	$3.277^{+.002}_{-.003}$	$83.24^{+0.05}_{-0.08}$
Q	.093 ±.005	2.36 ±0.13	45°	.022	0.56	.188	4.78	4.335±.003	110.11±0.08	4.281±.003	108.74 ±0.08
R	.093 ±.005	2.36 ±0.13	45°	.022	0.56	.215	5.46	5.092±.003	129.34±0.08	5.033±.003	127.84 ±0.08
T	.093 ±.005	2.36 ±0.13	45°	.022	0.56	.142	3.61	$6.510^{+.003}_{-.004}$	$165.35^{+0.08}_{-0.10}$	$6.420^{+.004}_{-.003}$	$163.07^{+0.10}_{-0.08}$
U	.093 ±.005	2.36 ±0.13	45°	.022	0.56	.142	3.61	6.992±.003	177.60±0.08	6.902±.003	175.31 ±0.08
V	.275 ±.005	6.99 ±0.13	30°	.020	0.51	.275	6.99	9.125±.005	231.78±0.13	8.336±.003	211.73 ±0.08
W	.353 ±.005	8.97 ±0.13	30°	.020 ± .005	0.51±0.13	.353	8.97	11.125±.005	282.58±0.13	10.458±.005	265.63 ±0.13

XIV. Maintenance Instructions (Contd.)

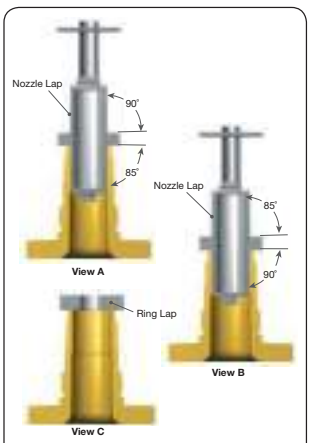

Figure 28: Lapping Nozzle Seats

C. Lapping Nozzle Seats (Metal Seat, Non-O-Ring Styles)

ATTENTION!

Nozzle laps as illustrated in Figure 28 are available from Dresser, Inc. Do not use these laps if the valve nozzle can be removed and machined to the seat dimensions described in Table 3 and Table 4.

Lap the 5° angle of the nozzle first (Figure 28, View A). Then, invert the nozzle lap and use the flat side as a "starter" lap to ensure the seat is square (Figure 28, View B). Use a ring lap in a circular motion to finish lapping (See Figure 28, View C and Reconditioning of Laps). Keep the lap squarely on the flat surface and avoid rocking the lap, which will cause rounding of the seat.

D. Lapped Nozzle Seat Widths

A wide nozzle seat will induce leakage, especially in the smaller-orifice, lower-pressure valves. For this reason, the seat of valves other than O-Ring valves should be as narrow as practical. Since the seat must be wide enough to carry the bearing load imposed upon it by the pressure force, the higher pressure valves must have wider seats than the lower pressure valves. The nozzle seat width should conform to the measurements in Table 3 and Table 4.

To measure the seat width, use a Model S1-34-35-37 Bausch and Lomb Optical Co. measuring magnifier or

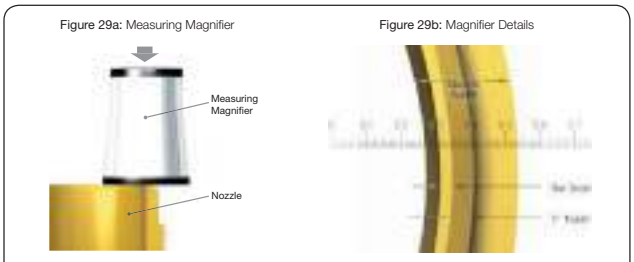

Figure 29: Measuring Magnifier

XIV. Maintenance Instructions (Contd.)

Table 3: Approximate Nozzle Seat Width (Std. Metal Seat Designs)

Orifice	Set Pressure Range[1] min. psig	barg	max. psig	barg	Lapped Seat Width min. in.	mm	max. in.	mm
D - G	1	0.07	50	3.45	.012	0.30	.015	0.38
	51	3.52	100	6.89	.015	0.38	.022	0.56
	101	6.96	250	17.24	.022	0.56	.028	0.71
	251	17.31	400	27.58	.028	0.71	.035	0.89
	401	27.65	800	55.16	.035	0.89	.042	1.07
	801	55.23	Above		Note 2		Note 2	
H - J	1	0.07	50	3.45	.019	0.48	.022	0.56
	51	3.52	100	6.89	.022	0.56	.027	0.69
	101	6.96	250	17.24	.027	0.69	.031	0.79
	251	17.31	400	27.58	.031	0.79	.035	0.89
	401	27.65	800	55.16	.035	0.89	.040	1.02
	801	55.23	Above		Note 3		Note 3	
K - N	1	0.07	50	3.45	.025	0.64	.028	0.71
	51	3.52	100	6.89	.028	0.71	.033	0.84
	101	6.96	250	17.24	.033	0.84	.038	0.97
	251	17.31	400	27.58	.038	0.97	.043	1.09
	401	27.65	800	55.16	.043	1.09	.048	1.22
	801	55.23	Above		Note 4		Note 4	
P - R	1	0.07	50	3.45	.030	0.76	.034	0.86
	51	3.52	100	6.89	.034	0.86	.041	1.04
	101	6.96	251	17.31	.041	1.04	.049	1.24
	251	17.31	400	27.58	.049	1.24	.056	1.42
	401	27.65	800	55.16	.056	1.42	.062	1.57
	801	55.23	Above		.062	1.57	.064	1.63
T	1	0.07	50	3.45	.040	1.02	.043	1.09
	51	3.52	100	6.89	.043	1.09	.049	1.24
	101	6.96	250	17.24	.049	1.24	.057	1.45
	251	17.31	300	20.68	.057	1.45	.060	1.52
U	1	0.07	50	3.45	.040	1.02	.043	1.09
	51	3.52	100	6.89	.043	1.09	.049	1.24
	101	6.96	250	17.24	.049	1.24	.057	1.45
	251	17.31	300	20.68	.057	1.45	.060	1.52
V	1	0.07	50	3.45	.075	1.91	.083	2.11
	51	3.52	100	6.89	.083	2.11	.103	2.62
	101	6.96	250	17.24	.103	2.62	.123	3.12
	251	17.31	300	20.68	.123	3.12	.130	3.30
W	1	0.07	50	3.45	.100	2.54	.110	2.79
	51	3.52	100	6.89	.110	2.79	.130	3.30
	101	6.96	250	17.24	.130	3.30	.150	3.81
	251	17.31	300	20.68	.150	3.81	.160	4.06

Note 1: Seat widths for set pressures below 15 psig (1.03 barg) should be approximately the same as those shown for 15 psig (1.03 barg).

Note 2: 042" + .005" (1.07 + 0.13 mm) per 100 psig (6.89 barg). Not to exceed .070 ± .005" (1.78±0.13 mm).

Note 3: 040" + .005" (1.02 + 0.13 mm) per 100 psig (6.89 barg). Not to exceed .070 ± .005" (1.78±0.13 mm).

Note 4: 048" + .005" (1.22 + 0.13 mm) per 100 psig (6.89 barg). Not to exceed .070 ± .005" (1.78±0.13 mm).

Table 4: Approx. Nozzle Seat Width (Thermodisc Designs)

Orifice	Set Pressure Range[1] min. psig	barg	max. psig	barg	Lapped Seat Width min. in.	mm	max. in.	mm
D - F	1	0.07	100	6.89	.020	0.51	.035	0.89
	101	6.96	300	20.68	.035	0.89	.045	1.14
	301	20.75	800	55.16	.045	1.14	.055	1.40
	801	55.23	Above		Full Width[2]			
G - J	1	0.07	100	6.89	.025	0.64	.035	0.89
	101	6.96	300	20.68	.035	0.89	.045	1.14
	301	20.75	800	55.16	.045	1.14	.055	1.40
	801	55.23	Above		Full Width[2]			
K - N	1	0.07	100	6.89	.035	0.89	.045	1.14
	101	6.96	300	20.68	.045	1.14	.055	1.40
	301	20.75	800	55.16	.055	1.40	.065	1.65
	801	55.23	Above		Full Width[2]			
P - R	1	0.07	100	6.89	.040	1.02	.050	1.27
	101	6.96	130	8.96	.050	1.27	.060	1.52
	131	9.03	800	55.16	.060	1.52	.070	1.78
	801	55.23	Above		Full Width[2]			
T	1	0.07	100	6.89	.050	1.27	.060	1.52
	101	6.96	300	20.68	.060	1.52	.075	1.91
U	1	0.07	100	6.89	.050	1.27	.060	1.52
	101	6.96	300	20.68	.060	1.52	.075	1.91
V	1	0.07	100	6.89	.075	1.91	.100	2.54
	101	6.96	300	20.68	.100	2.54	.130	3.30
W	1	0.07	100	6.89	.100	2.54	.125	3.18
	101	6.96	300	20.68	.125	3.18	.160	4.06

Note 1: Seat widths for set pressures below 15 psig (1.03 barg) should be approximately the same as those shown for 15 psig (1.03 barg).

Note 2: Not to exceed .070 ± .005" (1.78±0.13 mm).

XIV. Maintenance Instructions (Contd.)

an equivalent seven-power glass with a 3/4" (19.05 mm) scale showing graduations of 0.005" (0.13 mm). Figure 29a and 29b illustrate the use of this tool in measuring the nozzle seat width. If additional lighting is required for measuring, use a gooseneck flashlight similar to the Type A Lamp Assembly (Standard Molding Corp.), or equivalent.

E. Lapping Disc Seats

Use a ring lap or lapping plate to lap the disc in a circular motion, applying uniform pressure and slowly rotating the disc or lap.

- Apply 1000 lapping compound (see Table 18 in Lapping Tools Section XXIII.C. Lap disc to a polish finish.
- Remove lapping compound completely from Disc and Disc Holder.

F. Precautions and Hints for Lapping Seats

To ensure a quality lapping process, observe the following precautions and guidelines:

Keep work materials clean. Always use a fresh lap. If signs of wear (out of flatness) are evident, recondition the lap.

Apply a very thin layer of lapping compound to the lap to prevent rounding off the edges of the seat.

Keep the lap squarely on the flat surface, and avoid rocking the lap, which causes rounding of the seat.

When lapping, keep a firm grip on the lapped part to prevent dropping it and damaging the seat.

Lap in a circular motion while applying a uniform pressure. Slowly rotate the lap to evenly distribute the lapping compound. Wipe off the old compound and replace it with new compound frequently. Apply more pressure to speed the cutting action of the compound. To check the seating surfaces, remove all compound from the seat and the lap. Then, shine the seat with the same lap using the lapping method as described above. Low sections on the seating surface show up as shadow in contrast to the shiny portion. If shadows are present, further lapping is necessary. Only laps known to be flat can be used. It should take only a few minutes to remove the shadows.

When lapping is complete, any lines appearing as cross-scratches can be removed by rotating the lap on its axis (which has been wiped clean of compound) on the seat. Thoroughly clean the lapped seat using lint free cloth and a cleansing fluid.

ATTENTION!

Before assembly, grind the contact surfaces of the nozzle and O-Ring retainer to provide metal-to-metal seat tightness in the event of O-Ring failure.

G. Reconditioning of Laps

Ring laps are reconditioned by lapping them on a flat lapping plate in a figure-eight motion (Figure 30). To ensure the best results, recondition the ring laps after each use. Use an optical flat to check the quality of the lap.

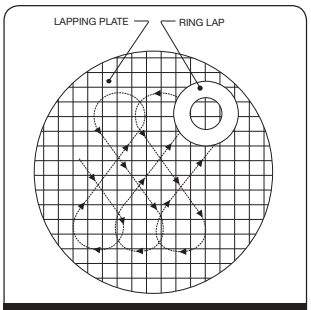

Figure 30: Lapping Pattern

Nozzle laps must be re-machined to recondition the lapping surfaces. Place the nozzle lap in a lathe between centers (Figure 31). The surfaces marked A and B must be running concentric.

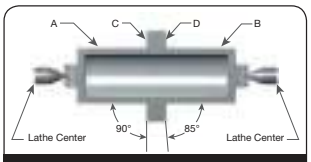

Figure 31: Nozzle Lap in a Lathe

XIV. Maintenance Instructions (Contd.)

H. Re-Machining Nozzle Seats

1. Remove the nozzle from the valve to be remachined. If it cannot be removed from the base, re-machine it inside the base.
2. Take the following steps to setup the lathe and nozzle:
   a. Grip the nozzle in a four-jaw independent chuck (or collet, if appropriate), using a piece of soft material such as copper or fiber between the jaws and the nozzle as shown at A (Figure 32).
   b. True up the nozzle so that the surfaces marked B and C run true within .001" (0.03 mm) on indicator (Figure 32).

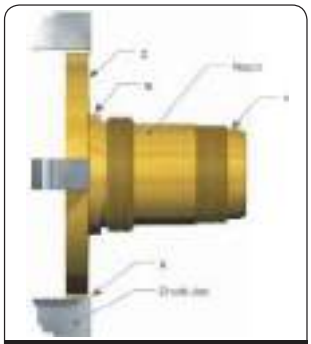

Figure 32: Nozzle Positioned in a Jaw

3. Take the following steps to re-machine the metal-to-metal nozzle (Figure 27a and Table 2):
   a. Make light cuts across the surface L at 5° until the damaged areas are removed. Turn to the smoothest possible finish.
   b. The nozzle is now ready for lapping.
   c. When the minimum dimension H is reached, discard the nozzle.
4. Take the following steps to re-machine the O-Ring seat seal (Figure 27b and Table 2):
   a. Make light cuts across surface A (45°) until the damaged areas are removed. Turn to the smoothest possible finish.
   b. Re-machine radius R.
   c. The nozzle is now ready for lapping.
   d. When the minimum dimension H is reached, discard the nozzle.

I. Re-Machining the Disc Seat

Take the following steps to machine the standard disc seating surface (Figure 33):

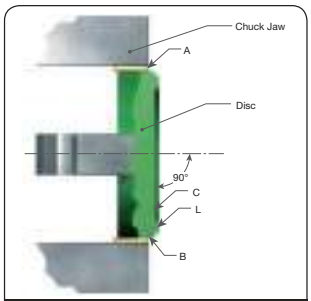

Figure 33: Standard Disc Seating Surface

1. Grip the disc in a four-jaw independent chuck (or collet, if appropriate), using a piece of soft material such as copper or fiber between the jaws and the disc as shown at A.
2. True up the disc so that the surface marked B and C run true within .001" (0.03 mm), TIR.
3. Make light cuts across the seating surface L until damaged areas are removed. Turn to the smoothest possible finish.
4. The disc is now ready for lapping.
5. Discard the disc if the minimum dimension N or T (Figure 34, Table 5) is reached. Do not reestablish surface C.

ATTENTION!

Do not remachine a Thermodisc or O-Ring Retainer.

XIV. Maintenance Instructions (Contd.)

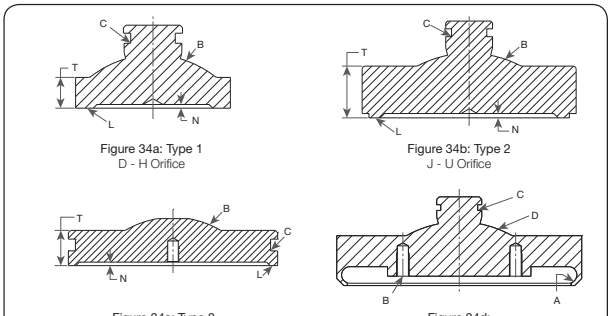

Figure 34a: Type 1
D - H Orifice

Figure 34b: Type 2
J - U Orifice

Figure 34c: Type 3
V&W Orifice

Figure 34d:
Disc O-Ring Soft Seat (K-U Orifices Only)

Figure 34: Metal and Soft Seat Disc Inspection Areas

Table 5: Metal Seat Disc Machining Dimensions

Disc Type	Orifice Size	T min. in.	T min. mm	N min. in.	N min. mm
TYPE 1	D	.174	4.42	.010	0.25
	E	.174	4.42	.010	0.25
	F	.174	4.42	.010	0.25
	G	.174	4.42	.010	0.25
	H	.335	8.51	.010	0.25
TYPE 2	J	.369	9.37	.010	0.25
	K	.432	10.97	.038	0.97
	L	.467	11.86	.038	0.97
	M	.467	11.86	.038	0.97
	N	.495	12.57	.038	0.97
	P	.620	15.75	.068	1.73
	Q	.620	15.75	.068	1.73
	R	.620	15.75	.068	1.73
	T	.832	21.13	.068	1.73
	U	.833	21.16	.068	1.73
TYPE 3	V	1.230	31.24	.120	3.05
	W	1.855	47.12	.168	4.27

XV. Inspection and Part Replacement

1. Guide Replacement Criteria:

   2900 Series Guide should be replaced:

   a. if the sliding surface is galled, pitted or scratched or the machined gasket surfaces are damaged.

   b. The "A" dimension (See Figures 35, 36) exceeds A max. in Table 6.

Figure 35a: D-U Orifice

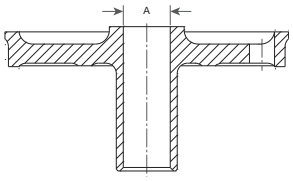

Figure 35b: V & W Orifice

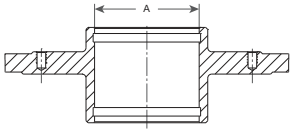

Figure 35: Guide Critical Dimensions (Metal Seat)

Table 6: Guide Critical Dimension

Orifice	A max.		Orifice	A max.	
	in.	mm		in.	mm
D	.455	11.56	N	1.876	47.65
E	.455	11.56	P	2.314	58.78
F	.455	11.56	Q	2.314	58.78
G	.500	12.70	R	2.314	58.78
H	.688	17.48	T	2.313	58.75
J	1.001	25.43	U	2.313	58.75
K	1.251	31.78	V	6.446	163.73
L	1.376	34.95	W	8.446	214.53
M	1.751	44.48			

Figure 36a: D-G Orifice

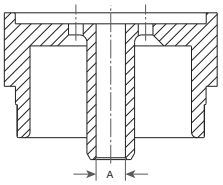

Figure 36b: H-U Orifice

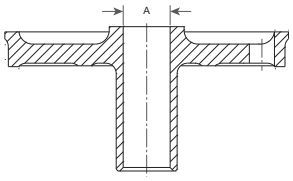

Figure 36c: V&W Orifice

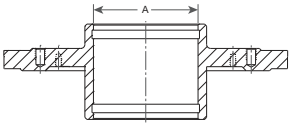

Figure 36: Guide Critical Dimensions (Bellows)

2. Base: Inspect general condition for cracks or holes. Look for any corrosion issues.

3. Bellows: Inspect general condition for cracks, holes or deformation of convolutions. Check for any corrosion or pitting.

4. Cover Plate: Cover Plate Should be reused if:

   a. The sliding surface in the dome area is not galled, scratched, corroded or pitted.

   b. The Gasket surface is not scratched, corroded or pitted.

XV. Inspection and Part Replacement (Contd.)

5. O-Ring Retainer: Inspect surface that sits on the disc for any corrosion or defects that might cause the disc not to sit flush with nozzle.

6. Nozzle: Nozzle should be replaced if:

   a. The seat width requires adjustment, and the Dimension from the seat to the first thread is less than "D" minimum on Table 2.

   b. Thread sections are damaged from pitting and/or corrosion.

   c. Top of the nozzle flange and intersecting surface are damaged from galling and/or tearing.

   d. The nozzle flange thickness can change center to face Dimensions. The minimum dimension for orifices "D" through "P" is .672" (16.50 mm) and "Q" through "W" orifices is .797" (20.20 mm).

   Nozzle Seat Width: Using a measuring magnifying glass, (see Lapped Nozzle Seat Widths), determine whether the finish lapped seat surface must be machined before lapping. If the seat can be lapped flat without exceeding the required seat width, as indicated in Table 3 or 4, it does not require machining.

   To reduce the seat width, the 5º angle surface must be machined. The nozzle must be replaced if the D min is reduced below the minimum as indicated in Table 2.

7. Spring: Check for any corrosion or pitting.

8. Standard Metal Seated Disc: This disc (Figure 34) can be machined until the T dimension is reduced to the minimum, as listed in Table 5. The "N" minimum dimension must be maintained as well.

9. Thermodisc Metal Seated Disc: This disc (Figure 37) cannot be machined. It can be lapped as long as the "A" minimum dimension has been maintained. If lapping does not fix damaged area, part must be discarded.

   The Thermodisc® must be replaced if:

   a. Seat defects and damage cannot be lapped out without reducing the "A" dimension in Figure 37 that is listed in Table 7.

   b. If the dimension cannot be measured, replace the Thermodisc®.

Figure 37a: D-H Orifices

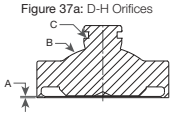

Figure 37b: J-U Orifices

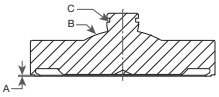

Figure 37c: V&W Orifices

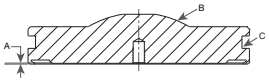

Figure 37: Thermodisc® Design

Table 7: Thermodisc Replacement Criteria

Orifice	A min.	
	in.	mm
D	.006	0.15
E	.006	0.15
F	.006	0.15
G	.006	0.15
H	.006	0.15
J	.013	0.33
K	.014	0.36
L	.014	0.36
M	.014	0.36
N	.014	0.36
P	.017	0.43
Q	.015	0.38
R	.015	0.38
T	.025	0.64
U	.025	0.64
V	.035	0.89
W	.035	0.89

XV. Inspection and Part Replacement (Contd.)

10. O-Ring Seated Disc: The O-Ring Retainer cannot be machined. It can be lapped for minor scratches. If lapping does not fix damaged area, part must be discarded.

11. Disc Holder: Disc Holder should be replaced if the sliding surface of the Holder is galled, pitted, or scratched.

12. Solid Metal Gaskets: Solid Metal Gaskets can be reused unless they are corroded, pitted, or crimped.

13. Main Valve Piston Replacement Criteria:

    The Piston should be re-used if:

    a. There is no indication of galling, scratched, corroded or pitted on any surface of the piston.

    b. The "B" & "E" dimensions (See Figure 38) are less than "B" minimum and "E" minimum, indicated in Table 8.

Replace all parts as needed. If any damage listed above is present, the part should be replaced or repaired per instruction. Other valve parts may be acceptable with light corrosion, pitting, or minor damage of other types if it can be determined that it will not affect product performance. All o-rings and seals should be replaced each time the valve is disassembled.

Refer to Tables 23 for a list of recommended spare parts and Table 24 for a list of O-Ring repair kits.

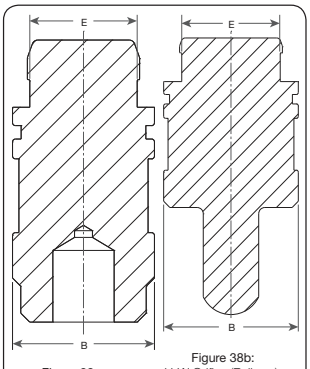

Figure 38a: D-G Orifice (Bellows)

Figure 38b: H-W Orifice (Bellows), D-W Orifice (Conventional)

Figure 38: Main Valve Piston

Table 8: Piston Critical Dimensions

Orifice	B min.		E min.	
	in.	mm	in.	mm
D	.989	25.12	.748	19.00
E	.989	25.12	.748	19.00
F	.989	25.12	.748	19.00
G	1.114	28.30	.873	22.17
H	1.365	34.67	.998	25.35
J	1.677	42.60	1.310	33.27
K	1.990	50.55	1.623	41.22
L	2.490	63.25	2.123	53.92
M	2.867	72.82	2.498	63.45
N	3.117	79.17	2.748	69.80
P	3.741	95.02	3.372	85.65
Q	4.861	123.47	4.498	114.25
R	5.735	145.67	5.372	136.45
T	7.360	186.94	6.997	177.72
U	8.110	205.99	7.747	196.77
V	9.662	245.41	9.500	241.30
W	Contact Dresser Engineering Department.			

XVI. Reassembly of the 2900 Main Valve

A. Lubricants and Sealants

1. Operating temperatures below -40°F (-40°C), consult the Factory.

2. Operating temperatures between -40 and +505°F (-40 and 262.7°C)

   a. Lubricate all o-rings, except silicone, spring energized seals, and back-up rings sparingly with silicone grease (Dresser P/N SP505).

   b. Seal all pipe threads with Teflon tape or pipe sealant (Dresser P/N SP364-AB).

   c. Lubricate standard threads and bearing points with Jet-Lube, Dresser non-metallic, product code #14613 (Dresser P/N4114510 or 4114511).

3. Operating temperatures above +505°F (262.7°C)

   a. Lubricate all o-rings, except silicone, spring energized seals, and back-up rings sparingly with silicone grease (Dresser P/N SP505).

   b. Seal all pipe threads with Teflon tape or pipe sealant (Dresser P/N SP364-AB).

   c. Lubricate standard threads and bearing points with nickel graphite N5000 (Dresser P/N 4114507) or equivalent.

B. Assembly Procedure with Metal Seats

1. If the valve Nozzle was removed, apply thread lubricant to the nozzle threads before reinstalling in the Base. Insert it into the inlet flange of the Base, and torque to the correct value listed in Table 9.

2. Assemble the disc/disc holder as follows:

   a. Prior to assembly of the Disc into the Disc Holder, remove the Disc Retainer from the back of the Disc. Use 1000 grit grinding compound on the bearing surface to grind the Disc into the Disc Holder to properly establish the bearing surface.

   b. For "D" through "U" orifice valves, place the Disc Retainer into the groove in the disc. The Disc with the Disc Retainer should "snap" into the Disc Holder pocket with moderate finger or hand force. **Do not use excessive force to assemble these parts**. Be sure that the Disc is free to "wobble" after it is in place. For V and W orifice discs, place Disc into Disc Holder and secure Disc Retaining Bolts.

C. Assembly Procedure with O-Ring Seats

1. If the valve Nozzle was removed, apply thread lubricant to the nozzle threads before reinstalling in the Base. Insert it into the inlet flange of the Base, and torque to the correct value listed in Table 9.

2. Assemble the disc/disc holder as follows:

   a. For disc sizes "D" thru "J", reassemble the Disc Holder using a new O-Ring, O-Ring Retainer, and new Lock Screw(s). Refer to Table 10 for the proper torque. These Disc Holders are ready for the next step.

Table 9: Nozzle Torque Values +10% - 0%

Orifice	Required Torque	
	ft-lbs	Nm
D, E & F	165	224
G	145	197
H	165	224
J	335	454
K	430	583
L	550	746
M	550	746
N	640	868
P	1020	1383
Q	1400	1898
R	1070	1451
T	1920	2603
U	1920	2603
V	1960	2657
W	2000	2712

Note: DO NOT USE impact wrench on "D" through "K" orifice Nozzles.

Table 10: Disc Holder Torque Values

Orifice	No. of Bolts	Bolt Size	Torque	
			in-lbs	N-m
D, E, F	1	1/4-28UNF	75 ± 3	8.5 ± 0.3
G	1	1/4-28UNF	75 ± 3	8.5 ± 0.3
H	1	1/4-28UNF	75 ± 3	8.5 ± 0.3
J	3	#10-32UNF	30 ± 2	3.4 ± 0.2
K	3	#8-32NC	18 ± 1	2.0 ± 0.1
L	3	#8-32NC	18 ± 1	2.0 ± 0.1
M	4	#8-32NC	18 ± 1	2.0 ± 0.1
N	4	#8-32NC	18 ± 1	2.0 ± 0.1
P	4	1/4-28UNF	75 ± 3	8.5 ± 0.3
Q	4	1/4-28UNF	75 ± 3	8.5 ± 0.3
R	4	1/4-28UNF	75 ± 3	8.5 ± 0.3
T	4	1/4-28UNF	75 ± 3	8.5 ± 0.3
U	4	1/4-28UNF	75 ± 3	8.5 ± 0.3
V	-	-	-	-
W	-	-	-	-

XVI. Reassembly of the 2900 Main Valve (Contd.)

b. For disc sizes "K" thru "W", reassemble the Disc using a new O-Ring, O-Ring Retainer, and new Lock Screws. Refer to Table 10 for the proper torque.

(i) Prior to assembly of the Disc into the Disc Holder, remove the Disc Retainer from the back of the Disc. Use 1000 grit grinding compound on the bearing surface to grind the Disc into the Disc Holder to properly establish the bearing surface.

(ii) Place the Disc Retainer into the groove in the disc. The Disc with the Disc Retainer should "snap" into the Disc Holder pocket with moderate finger or hand force. **Do not use excessive force to assemble these parts.** Be sure that the Disc is free to "wobble" after it is in place. For V and W orifice discs, place Disc into Disc Holder and secure Disc Retaining Bolts.

3. Set the Disc Holder (disc side down), on the work surface. Place a small amount of 1000 grit grinding compound onto the ball end of the Main Valve Piston and place it in the disc holder pocket. Turn the Main Valve Piston clockwise, and then counter clockwise, to seat the Main Valve Piston. Clean all grinding compound from parts.

4. a. For bellows valves "D" through "U", place a new Bellows Gasket on the Disc Holder. Thread the Bellows, finger-tight, down to the Gasket on the Disc Holder. Use a pin spanner wrench, or special cable type wrench to turn the Bellows Ring down until a pressure tight joint is obtained.

b. For bellows valves "V" and "W", place a new Bellows Gasket on the Disc Holder. Bolt down using proper torque as found in the assembly instructions.

c. For Spring Assist valves, place the Spring down onto the Disc Holder.

5. a. For D through U orifice valves:

Place the Guide over the Disc Holder. (DO NOT DROP.) If Bellows is present, the weight of the Guide will slightly compress the Bellows.

b. For V and W orifice valves:

Install guide rings into the grooves located inside the guide ID. Make sure the space where the upper and lower guide ring ends meet is positioned 180° apart. Mark both the guide and disc holder at the point where the bottom guide ring ends meet. This mark must be faced 180° away from the outlet when the assembly is place into the valve. Gently lower the guide down onto the disc holder ensuring that guide rings remain in their respective groove.

6. Place the Guide Gasket in the Base.

7. Install disc guide assembly. Use the same lifting tools (see Figure 21 and Figure 22) as was used during disassembly, then carefully lower it into the Base.

On "V" and "W" sizes, use the same lifting lugs as were used during disassembly.

8. Using a small amount of Silicone Grease supplied with soft goods replacement kit, rub a small amount on the seals and O-rings prior to assembly.

9. Take the Main Valve Piston and measure and cut diagonally the proper length of Guide Ring material to fit in the groove of the Main Valve Piston. Allow 1/16 of an inch gap between the ends for proper fit.

10. For Teflon seals make sure of the integrity of the Teflon seal and seal spring. Install Disc Seal on Disc outside diameter on the opposite end of the disc seat as shown in Figure 39.

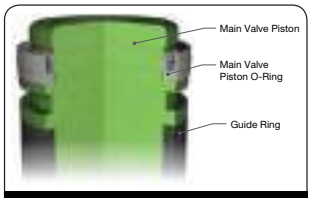

Figure 39: Main Valve Piston

If an O-Ring seal is used, it is installed in the groove between where the Guide Ring is installed and where a Spring Energized Seal would be installed (Figure 16).

11. Install the Guide Ring(s) onto the Main Valve Piston. If there is more than one Guide Ring, stagger the cut locations 180° apart.

12. To prevent seal damage during assembly, check the chamfer on the bottom of the Cover Plate for burrs. If any sharp edges exist, polish the chamfer.

13. Insert Main Valve Piston (energize seal/o-ring side first) into bottom of Cover Plate. Continue pushing Main Valve Piston into Cover Plate, being careful not to pinch the guide rings. Push Main Valve Piston in until bottom of Main Valve Piston is even with the bottom of the Cover Plate.

XVI. Reassembly of the 2900 Main Valve (Contd.)

Table 11: Cover Plate Nut Torque

Orifice	2905		2906		2910		2912		2914		2916		2918	
	ft lb	Nm	ft lb	Nm	ft lb	Nm	ft lb	Nm	ft lb	Nm	ft lb	Nm	ft lb	Nm
D	55	75	55	75	55	75	60	81	60	81	60	81	120	163
E	55	75	55	75	55	75	60	81	60	81	60	81	120	163
F	55	75	55	75	55	75	60	81	70	95	70	95	115	156
G	55	75	55	75	55	75	60	81	70	95	70	95	75	102
H	90	122	90	122	60	81	75	102	65	88	65	88	—	—
J	60	81	60	81	75	102	100	136	100	136	100	136	—	—
K	65	88	65	88	60	81	60	81	135	183	145	197	—	—
L	75	102	75	102	90	122	90	122	140	190	140	190	—	—
M	95	129	95	129	110	149	95	129	95	129	—	—	—	—
N	105	142	105	142	130	176	85	115	85	115	—	—	—	—
P	120	163	120	163	145	197	125	169	125	169	—	—	—	—
Q	105	142	105	142	125	169	150	203	—	—	—	—	—	—
R	115	156	115	156	115	156	135	183	—	—	—	—	—	—
T	95	129	95	129	95	129	125	169	—	—	—	—	—	—
U	95	129	95	129	95	129	125	169	—	—	—	—	—	—
V	130	176	130	176	130	176	—	—	—	—	—	—	—	—
W	130	176	130	176	130	176	—	—	—	—	—	—	—	—

Table 11: Cover Plate Nut Torque (Contd.)

Orifice	2920		2922		2923		2924		2926		2928	
	ft lb	Nm	ft lb	Nm	ft lb	Nm	ft lb	Nm	ft lb	Nm	ft lb	Nm
D	55	75	55	75	—	—	60	81	60	81	115	156
E	55	75	55	75	—	—	60	81	60	81	115	156
F	55	75	55	75	—	—	70	95	70	95	115	156
G	55	75	60	81	—	—	70	95	70	95	75	102
H	60	81	60	81	—	—	75	102	85	115	—	—
J	75	102	75	102	—	—	100	136	100	136	—	—
K	60	81	60	81	—	—	60	81	140	190	—	—
L	90	122	90	122	—	—	140	190	140	190	—	—
M	90	122	95	129	—	—	95	129	—	—	—	—
N	130	176	85	115	—	—	85	115	—	—	—	—
P	145	197	—	—	125	169	125	169	—	—	—	—
Q	105	142	150	203	—	—	—	—	—	—	—	—
R	115	156	135	183	—	—	—	—	—	—	—	—
T	125	169	—	—	—	—	—	—	—	—	—	—
U	125	169	—	—	—	—	—	—	—	—	—	—
V	130	176	—	—	—	—	—	—	—	—	—	—
W	130	176	—	—	—	—	—	—	—	—	—	—

XVI. Reassembly of the 2900 Main Valve (Contd.)

14. Install 1/4" MNPT pipe plug into Cover Plate where dome line connects.

15. Install Cover Plate Gasket. Install Cover Plate on top of Base such that the pilot will be aligned for proper tubing connections. Make note of the length of the studs. The two longer ones will straddle the vertical line of the inlet sensing port on the Main Base of the pilot valve. Install the bracket between the Cover Plate and the Nut or Cap Screw. Be sure that the bracket is aligned so that the two smaller pilot attachment holes are above the horizontal plane of the Cover Plate.

16. Remove pipe plug from Cover Plate.

17. Torque to the values found in Table 11 using the torque patterns in Figure 40 and Table 12.

18. Once the Main Valve is assembled before any tubing is connected reach through the hole in the center of the Cover Plate and force the Main Valve Piston down until it contacts the Disc Holder. Failure to complete this procedure will prevent the Main Valve from loading and closing, when pressure is applied to the valve.

19. The Main Valve is ready to receive the pilot and finished assembly.

Table 12: Torque Required for Each Round of Pattern

Round	Percentage of Required Torque
1	Wrench Tight
2	25
3	60
4	100
5	100

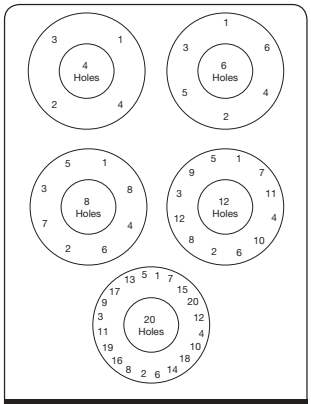

Figure 40: Bolt Tightening Patterns

XVII. Disassembly of Pilot Valve

A. 39PV07/37 Disassembly

Figures 41 and 42

1 Remove and discard the aluminum seals and sealing wire.

2. Remove Cap (Compression Screw) by turning counterclockwise.

3. If a lifting lever is installed, also use Figure 42 to remove the Lifting Lever assembly. Then return to Figure 41 to continue disassembly.

a. The Lifting Lever Assembly consists of:
1 – Lever
1 – Drive Pin
1 – Cam Shaft
1 – Bushing

b. Remove Lifting Lever Assembly by turning Bushing counterclockwise.

c. Turn Cap (Compression Screw) counterclockwise.

d. Measure distance from Release Lock Nut to the top of the Lifting Stem for reassembly later.

e. Remove the Release Lock Nut and Release Nut by turning counterclockwise.

4. Measure and record Compression Screw height for later use when resetting.

5. Turn Compression Screw Lock Nut counterclockwise to loosen.

6. Turn Compression Screw counterclockwise to remove the load on the Spring.

7. Turn Set Screw counterclockwise to loosen.

8. Bonnet can now be removed by turning counterclockwise.

9. Spring and Spring Washers can now be removed.

Note: If Lifting Lever option is equipped, there is no need to remove Drive Pin from Bottom Spring Washer assembly.

10. Remove the four Cap Screws (Top Plate) holding the Top Plate to the Pilot Base. Remove and discard the Spring Seal (Main Piston) and O-Ring (Top Plate).

11. Remove Main Piston from Pilot Base.

Note: For Dirty Service Option, please refer to "Dirty Service Option" (Section XXII.B) for disassembly instructions.

12. Removing the Insert Assembly.

The Insert Assembly consists of:

1 - Insert Top
1 - Insert Bottom
1 - Spring Seal (Insert)
1 - O-Ring (Insert)

Remove Insert Assembly from the top of the Pilot Base with tool #4995401 as shown in Figure 81. Remove and discard the O-Ring (Insert) on the bottom of the Insert Assembly. Disassemble Insert Assembly by removing the Insert Bottom from the Insert Top. Discard Spring Seal (Insert).

13. Remove Adjuster Cap from the bottom of the Pilot Base by turning counterclockwise.

14. Loosen Adjuster Lock Nut by turning counterclockwise.

15. Removing the Adjuster Assembly.

The Adjuster Assembly consists of:

1 – Adjuster Top
1 – Adjuster Bottom
1 – O-Ring (Adjuster Top)
1 – O-Ring (Adjuster Bottom)
1 – Spring Seal (Adjuster Top)

16. Turn Adjuster Assembly clockwise counting the number of flats until assembly stops. Record number of flats for reassembly.

17. Remove Adjuster Assembly from the Pilot Base by turning counterclockwise. Remove O-Ring (Adjuster Top) and O-Ring (Adjuster Bottom) from adjuster assembly and discard. Disassemble Adjuster Top from the Adjuster Bottom by turning Adjuster Top counterclockwise. Remove Spring Seal (Adjuster Top) from Adjuster Top and discard.

18. Refer to Field Test Connection / Backflow Preventer Option (Section XXII.A) for disassembly of Field Test Connection

XVII. Disassembly of Pilot Valve (Contd.)

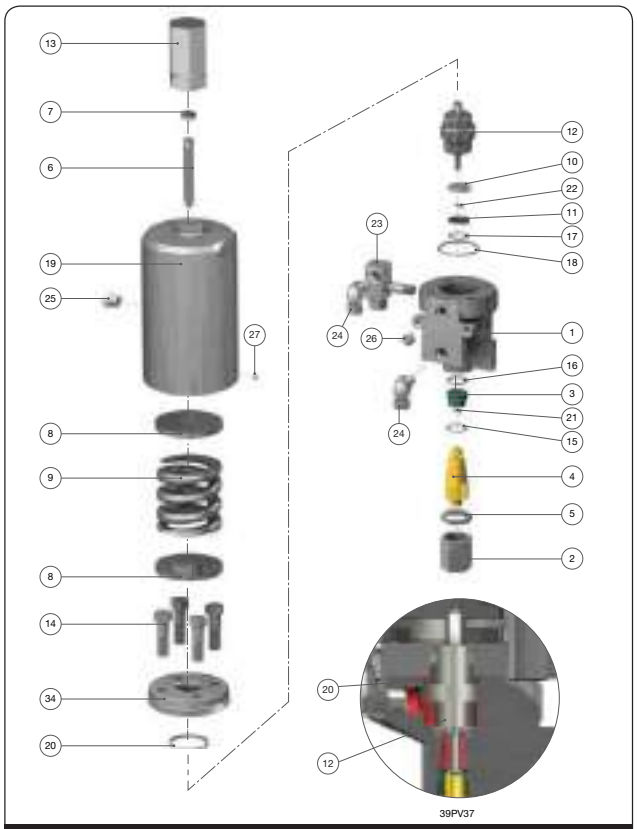

Figure 41: 39PV07/37 Disassembly

XVII. Disassembly of Pilot Valve (Contd.)

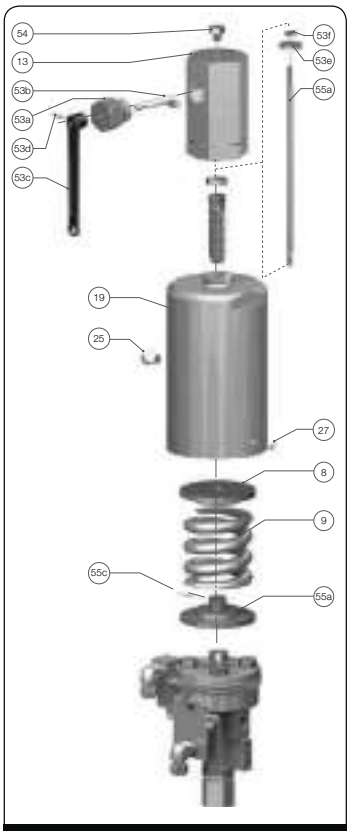

Figure 42: Lifting Lever Disassembly

Part No.	Nomenclature
1	Main Base
2	Adjuster Cap
3	Adjuster Top
4	Adjuster Bottom
5	Adjuster Lock Nut
6	Compression Screw
7	Compression Screw Lock Nut
8	Spring Washer
9	Spring
10	Insert Top
11	Insert Bottom
12	Main Piston
13	Cap (Compression Screw)
14	Cap Screw (Top Plate)
15	O-Ring (Adjuster Bottom)
16	O-Ring (Adjuster Top)
17	O-Ring (Insert)
18	O-Ring (Top Plate)
19	Bonnet
20	Spring Seal (Main Piston)
21	Spring Seal (Adjuster Top)
22	Spring Seal (Insert)
23	Field Test Connector
24	Vent Assembly/Bug Screen (Field Test Connection)
25	Vent Assembly (Bonnet Vent)[1]
27	Set Screw (Bonnet)
34	Top Plate
53	Lifting Lever Assembly
53a	Cam Bushing
53b	Cam Shaft
53c	Lifting Lever
53d	Drive Pin
53e	Release Nut
53f	Release Locknut
54	Gag Bolt
55	Lower Spring Washer Assembly
55a	Lower Spring Washer
55b	Lifting Stem
55c	Drive Pin

Note 1: Standard material is a filter plug. For special materials, vent assembly is supplied.

XVII. Disassembly of Pilot Valve (Contd.)

B. 39MV07 Disassembly

Figures 42 and 43

1 Remove and discard the aluminum seals and sealing wire.

2. Remove Cap (Compression Screw) by turning counterclockwise.

3. If a lifting lever is installed, also use Figure 42 to remove the Lifting Lever assembly. Then return to Figure 43 to continue disassembly.

   a. The Lifting Lever Assembly consists of:
      1 – Lever
      1 – Drive Pin
      1 – Cam Shaft
      1 – Bushing

   b. Remove Lifting Lever Assembly by turning Bushing counterclockwise.

   c. Turn Cap (Compression Screw) counterclockwise.

   d. Measure distance from Release Lock Nut to the top of the Lifting Stem for reassembly later.

   e. Remove the Release Lock Nut and Release Nut by turning counterclockwise.

4. Measure and record Compression Screw height for later use when resetting.

5. Turn Compression Screw Lock Nut counterclockwise to loosen.

6. Turn Compression Screw counterclockwise to remove the load on the Spring.

7. Turn Set Screw counterclockwise to loosen.

8. Bonnet can now be removed by turning counterclockwise.

9. Spring and Spring Washers can now be removed.

Note: If Lifting Lever option is equipped, there is no need to remove Drive Pin from Bottom Spring Washer assembly.

10. Remove the four Cap Screws (Top Plate) holding the Top Plate to the Pilot Base. Remove and discard the Spring Seal (Main Piston) and O-Ring (Top Plate).

11. Remove Main Piston from Pilot Base.

Note: For Dirty Service Option, please refer to Dirty Service Option (Section XXII.B) for disassembly instructions.

12. Removing the Insert Assembly.

    The Insert Assembly consists of:
    1 - Insert Top
    1 - Insert Bottom
    1 - Spring Seal (Insert)
    1 - O-Ring (Insert)

    Remove Insert Assembly from the top of the Pilot Base with tool #4995401 as shown in Figure 81. Remove and discard the O-Ring (Insert) on the bottom of the Insert Assembly. Disassemble Insert Assembly by removing the Insert Bottom from the Insert Top. Discard Spring Seal (Insert).

13. Remove Adjuster Cap from the bottom of the Pilot Base by turning counterclockwise.

14. Loosen Adjuster Lock Nut by turning counterclockwise.

15. Removing the Adjuster Assembly.

    The Adjuster Assembly consists of:
    1 – Adjuster Top
    1 – Adjuster Bottom
    1 – O-Ring (Adjuster Top)
    1 – O-Ring (Adjuster Bottom)
    1 – Spring Seal (Adjuster Top)

16. Turn Adjuster Assembly clockwise counting the number of flats until assembly stops. Record number of flats for reassembly.

17. Remove Adjuster Assembly from the Pilot Base by turning counterclockwise. Remove O-Ring (Adjuster Top) and O-Ring (Adjuster Bottom) from adjuster assembly and discard. Disassemble Adjuster Top from the Adjuster Bottom by turning Adjuster Top counterclockwise. Remove Spring Seal (Adjuster Top) from Adjuster Top and discard.

18. Refer to Field Test Connection / Backflow Preventer Option (Section XXII.A) for disassembly of Field Test Connection

19. Remove Socket Head Cap Screw (2 Nos.) to remove Modulator Assembly from Pilot Base. Remove and discard both O-Rings (Modulator Base).

    The Modulator Assembly consists of:
    1 – Modulator Base
    1 – Modulator Stop
    1 – Modulator Piston Assembly

XVII. Disassembly of Pilot Valve (Contd.)

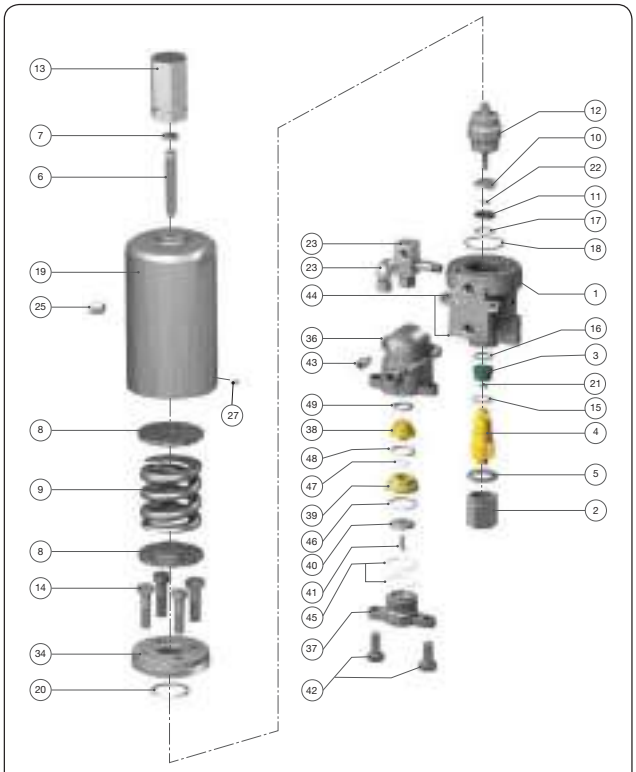

Figure 43: 39MV07 Disassembly

XVII. Disassembly of Pilot Valve (Contd.)

Part No.	Nomenclature
1	Main Base
2	Adjuster Cap
3	Adjuster Top
4	Adjuster Bottom
5	Adjuster Lock Nut
6	Compression Screw
7	Compression Screw Lock Nut
8	Spring Washer
9	Spring
10	Insert Top
11	Insert Bottom
12	Main Piston
13	Cap (Compression Screw)
14	Cap Screw (Top Plate)
15	O-Ring (Adjuster Bottom)
16	O-Ring (Adjuster Top)
17	O-Ring (Insert)
18	O-Ring (Top Plate)
19	Bonnet
20	Spring Seal (Main Piston)
21	Spring Seal (Adjuster Top)
22	Spring Seal (Insert)
23	Field Test Connector
24	Vent Assembly/Bug Screen (Field Test Connection)
25	Vent Assembly (Bonnet Vent)[1]
27	Set Screw (Bonnet)
34	Top Plate
36	Modulator Base
37	Modulator Stop
38	Modulator Piston Top
39	Modulator Piston Bottom
40	O-Ring Retainer
41	Lock Screw (Retainer)
42	Cap Screw (Modulator)
43	Socket Head Cap Screw (Modulator)
44	O-Ring (Modulator Base)
45	O-Ring (Modulator Stop)
46	O-Ring (Modulator Seat)
47	O-Ring (Modulator Piston Bottom)
48	Spring Seal (Piston Bottom)
49	Spring Seal (Piston Top)

Note 1: Standard material is a filter plug. For special materials, vent assembly is supplied.

The Modulator Piston Assembly consists of:
1 – Modulator Piston Top
1 – Modulator Piston Bottom
1 – O-Ring Retainer
1 – Lock Screw
1 – O-Ring Modulator Piston Bottom
1 – Spring Seal (Piston Top)
1 – Spring Seal (Piston Bottom)
1 – O-Ring (Modulator Seat)

20. Remove Cap Screws (Modulator) holding Modulator Stop to Modulator Base.
21. Modulator Base can now be removed by rotating the Modulator Stop enough to be able to push against the ears on the Modulator Base to remove the Modulator Stop.
22. Remove both O-Rings (Modulator Stop) and discard.
23. Disassemble the Modulator Piston Assembly by removing the Lock Screw.
24. Remove and discard O-Ring (Modulator Piston Bottom) and O-Ring (Modulator Seat). Be careful not to bend the lip enclosing the O-Ring (Modulator Seat) during its removal.
25. Discard Spring Seal (Piston Bottom) and Spring Seal (Piston Top).

XVII. Disassembly of Pilot Valve (Contd.)

C. 39MV22/72 Disassembly

Figures 44, 45 and 42

1 Remove and discard the aluminum seals and sealing wire.

2. Remove Cap (Compression Screw) by turning counterclockwise.

3. If a lifting lever is installed, also use Figure 42 to remove the Lifting Lever assembly. Then return to Figure 44 or 45 to continue disassembly.
   a. The Lifting Lever Assembly consists of:
      1 – Lever
      1 – Drive Pin
      1 – Cam Shaft
      1 – Bushing
   b. Remove Lifting Lever Assembly by turning Bushing counterclockwise.
   c. Turn Cap (Compression Screw) counterclockwise.
   d. Measure distance from Release Lock Nut to the top of the Lifting Stem for reassembly later.
   e. Remove the Release Lock Nut and Release Nut by turning counterclockwise.

4. Measure and record Compression Screw height for later use when resetting.

5. Turn Compression Screw Lock Nut counterclockwise to loosen.

6. Turn Compression Screw counterclockwise to remove the load on the Spring.

7. Turn Set Screw counterclockwise to loosen.

8. Bonnet can now be removed by turning counterclockwise.

9. Spring and Spring Washers can now be removed.

Note: If Lifting Lever option is equipped, there is no need to remove Drive Pin from Bottom Spring Washer assembly.

10. Remove the four Cap Screws (Top Plate) holding the Top Plate to the Pilot Base. Remove and discard the Spring Seal (Main Piston), O-Ring (Top Plate) and back-up rings (if applicable).

11. Remove Main Piston Assembly from Pilot Base.

12. Main Piston Assembly consists of:
    1 – Main Piston
    1 – Piston Nose
    1 – Piston Retainer Nut
    1 – Set Screw

    Remove Set Screw. Turn Piston Retainer Nut counterclockwise to remove. Remove Piston Nose.

Note: For Dirty Service Option, please refer to "Dirty Service Option" (Section XXII.B) for disassembly instructions.

13. Remove Spring Seal (Main Piston) and Backup Ring (if applicable) and discard.

14. Removing the Insert Assembly.

    The Insert Assembly consists of:
    1 - Insert Top
    1 - Insert Bottom
    1 - Spring Seal (Insert)
    1 - O-Ring (Insert)

    Remove Insert Assembly from the top of the Pilot Base with tool #4995401 as shown in Figure 81. Remove and discard the O-Ring (Insert) on the bottom of the Insert Assembly. Disassemble Insert Assembly by removing the Insert Bottom from the Insert Top. Discard Spring Seal (Insert).

15. Remove Adjuster Cap from the bottom of the Pilot Base by turning counterclockwise.

16. Loosen Adjuster Lock Nut by turning counterclockwise.

17. Removing the Adjuster Assembly.

    The Adjuster Assembly consists of:
    1 – Adjuster Top
    1 – Adjuster Bottom
    1 – Vent Seal Adaptor
    1 – O-Ring (Adjuster Top)
    1 – O-Ring (Adjuster Bottom)
    1 – Spring Seal (Adjuster Top)
    1 – Spring Seal (Adjuster Bottom)

18. Turn Adjuster Assembly clockwise counting the number of flats until assembly stops. Record number of flats for reassembly.

19. Remove Adjuster Assembly from the Pilot Base by turning counterclockwise. Remove O-Ring (Adjuster Top) and O-Ring (Adjuster Bottom) from adjuster assembly and discard. Disassemble Adjuster Top from the Adjuster Bottom by turning Adjuster Top counterclockwise. Remove the Vent Seal Adaptor from the Adjuster Top. Remove and discard the Spring Seal (Adjuster Top) and Spring Seal (Adjuster Bottom).

20. Refer to Field Test Connection / Backflow Preventer Option (Section XXII.A) for disassembly of Field Test Connection

XVII. Disassembly of Pilot Valve (Contd.)

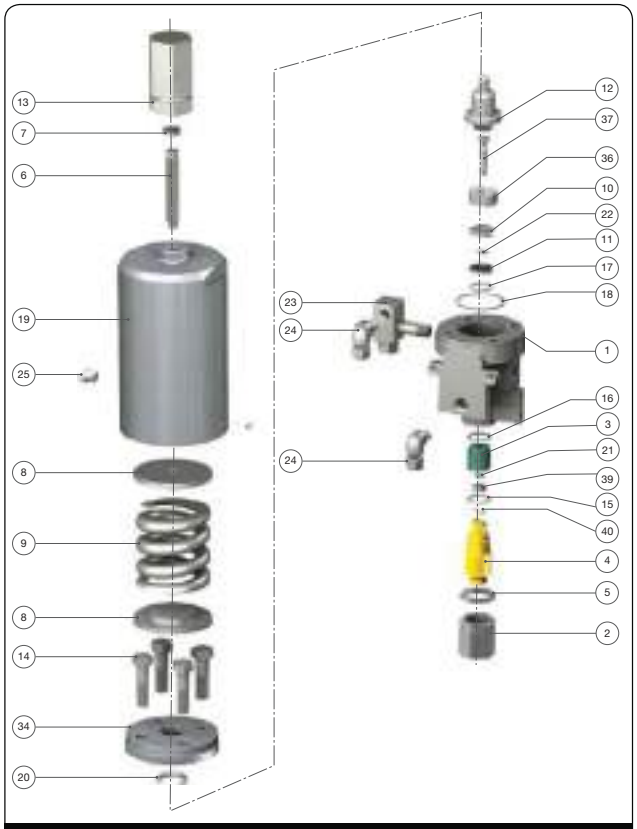

Figure 44: 39MV22 Disassembly

XVII. Disassembly of Pilot Valve (Contd.)

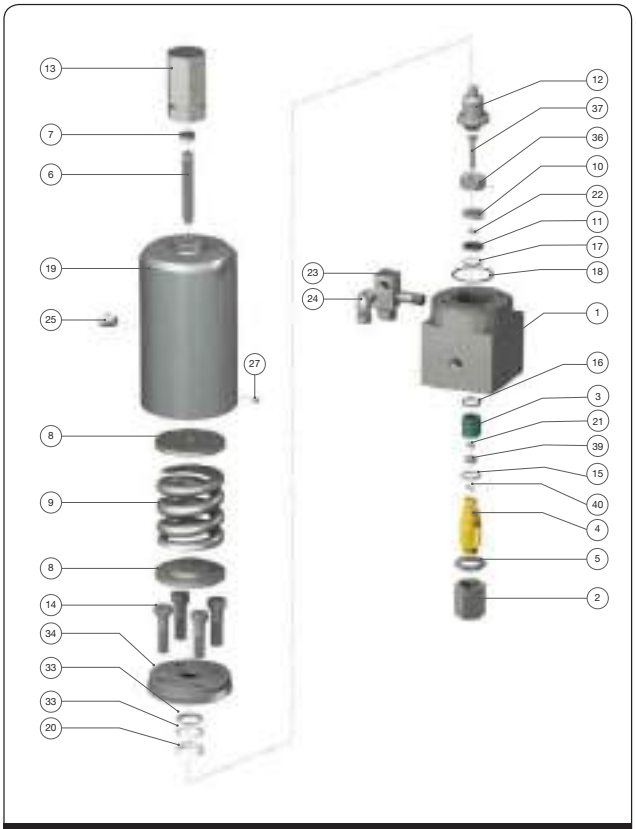

Figure 45: 39MV72 Disassembly

XVII. Disassembly of Pilot Valve (Contd.)

Part No.	Nomenclature
1	Main Base
2	Adjuster Cap
3	Adjuster Top
4	Adjuster Bottom
5	Adjuster Lock Nut
6	Compression Screw
7	Compression Screw Lock Nut
8	Spring Washer
9	Spring
10	Insert Top
11	Insert Bottom
12	Main Piston
13	Cap (Compression Screw)
14	Cap Screw (Top Plate)
15	O-Ring (Adjuster Bottom)
16	O-Ring (Adjuster Top)
17	O-Ring (Insert)
18	O-Ring (Top Plate)
19	Bonnet
20	Spring Seal (Main Piston)
21	Spring Seal (Adjuster Top)
22	Spring Seal (Insert)
23	Field Test Connector
24	Vent Assembly/Bug Screen (Field Test Connection)
25	Vent Assembly (Bonnet Vent)[1]
27	Set Screw (Bonnet)
28	Piston Nose
29	Piston Retainer Nut
30	Set Screw (Piston)
31	Vent Seal (Adaptor)
32	Spring Seal (Vent Seal Adaptor)
33	Back-up Ring (39MV72 Only)
34	Top Plate

Note 1: Standard material is a filter plug. For special materials, vent assembly is supplied.

D. Cleaning

1. Clean parts to remove all rust, burrs, scale, organic matter, and loose particles. Parts are to be free of any oil or grease except for lubrication as specified in this instruction.
2. Cleaning agents used shall be such that effective cleaning is assured without injuring the surface finishes or material properties of the part.
3. Acceptable cleaning agents include demineralized water, nonphosphate detergent, acetone, and isopropyl alcohol. Parts must be blown dry or wiped dry after cleaning.
4. If you are using cleaning solvents, take precautions to protect yourself from potential danger from breathing fumes, chemical burns, or explosion. See the solvent's Material Safety Data Sheet for safe handling recommendations and equipment.
5. Do not "sand blast" internal parts as it can reduce the dimensions of the parts.

XVIII. Part Inspection of Pilot Valve

After the valve has been disassembled, all parts should be given a visual inspection. Some key areas to check with the boundaries for reworking parts are listed blow.

A. 39PV07/37

1. Main Piston: Galling or excessive wear on the small diameter end where it engages the spring seals or on the spherical bearing surface. Any corrosion or pitting that appears detrimental to the function of the valve. The part can be polished as long as the outside diameter of the stem remains at .243 ± .001" (6.18 ± 0.03 mm). The stem itself must have a T.I.R of .001" (0.03 mm) along its length. The upper diameter where the Spring Seal (Main Piston) rides must be 1.495 ± .001 (37.97 ± 0.03 mm) on 39PV07 model or .970 ± .001" (24.64 ± 0.03 mm) on 39PV37. A surface finish of 8 RMS must be maintained for proper sealing on these surfaces.
2. Insert Top: Galling or excessive wear on the inside diameter that guides the Main Piston. Check for any corrosion or pitting. Also, check for galling of threads.
3. Insert Bottom: Galling or excessive wear on the inside diameter that guides the Main Piston. Check for any corrosion or pitting.
4. Adjuster Top: Galling or excessive wear on the inside diameter that guides the Main Piston. Check for any corrosion or pitting. Also, check for galling of threads.
5. Adjuster Bottom: Galling or excessive wear on the inside diameter that guides the Main Piston. Check for any corrosion or pitting. Also, check for galling of threads.
6. Top Plate: Galling or excessive wear on the inside diameter that guides the Main Piston. Check for any corrosion or pitting. Also, check for galling of threads.
7. Bonnet: Check for any corrosion or pitting. Also, check for galling of threads for the compression screw and where it attaches to the Pilot Base.
8. Compression Screw: Galling at the spherical bearing surface or in the thread. Check for any corrosion or pitting.
9. Spring Washer(s): Galling at the spherical bearing surface. Check for any corrosion or pitting.
10. Pilot Base: Check for any corrosion or pitting. Also, check for galling of threads.
11. Spring: Check for any corrosion or pitting.

B. 39MV07

1. Main Piston: Galling or excessive wear on the small diameter end where it engages the spring seals or on the spherical bearing surface. Any corrosion or pitting that appears detrimental to the function of the valve. The part can be polished as long as the outside diameter of the stem remains at .243 ± .001" (6.17 ± 0.03 mm). The stem itself must have a T.I.R of .001" (0.03 mm) along its length. The upper diameter where the Spring Seal (Main Piston) rides must be 1.495 ± .001 (37.97 ± 0.03 mm) on 39PV07 model or .970 ± .001" (24.64 ± 0.03 mm) on 39PV37. A surface finish of 8 RMS must be maintained for proper sealing on these surfaces.
2. Insert Top: Galling or excessive wear on the inside diameter that guides the Main Piston. Check for any corrosion or pitting. Also, check for galling of threads.
3. Insert Bottom: Galling or excessive wear on the inside diameter that guides the Main Piston. Check for any corrosion or pitting.
4. Adjuster Top: Galling or excessive wear on the inside diameter that guides the Main Piston. Check for any corrosion or pitting. Also, check for galling of threads.
5. Adjuster Bottom: Galling or excessive wear on the inside diameter that guides the Main Piston. Check for any corrosion or pitting. Also, check for galling of threads.
6. Top Plate: Galling or excessive wear on the inside diameter that guides the Main Piston. Check for any corrosion or pitting. Also, check for galling of threads.
7. Bonnet: Check for any corrosion or pitting. Also, check for galling of threads for the compression screw and where it attaches to the Pilot Base.
8. Compression Screw: Galling at the spherical bearing surface or in the thread. Check for any corrosion or pitting.
9. Spring Washer(s): Galling at the spherical bearing surface. Check for any corrosion or pitting.
10. Pilot Base: Check for any corrosion or pitting. Also, check for galling of threads.
11. Spring: Check for any corrosion or pitting.
12. Modulator Stop: Top seating surface for cuts or deformities. The surface can be lapped if the distance from the seat to the outside shoulder does not reduce to less than .086" (2.18 mm).

XVIII. Part Inspection of Pilot Valve (Contd.)

13. O-Ring Retainer: Seating surface for cuts or deformities. The surface can be lapped if the overall height of the part does not reduce to less than .160" (4.06 mm). Also, check the outside diameter for any scratches that might prevent the O-Ring (Modulator Seat) from sealing.
14. Modulator Piston Bottom: Galling or excessive wear on the outside diameter that rubs against the Modulator Base. Make sure that the lip holding the O-Ring (Modulator Seat) is not deformed. Also, check the outside diameter of the O-Ring groove for scratches that might cause the O-Ring (Modulator Seat) not to seal. Check for any corrosion or pitting.
15. Modulator Base: Galling or excessive wear on any inside diameter. Any corrosion or pitting.

C. 39MV22/72

1. Main Piston: Galling or excessive wear on the diameter where the Spring Seal (Main Piston) engages or on the spherical bearing surface. Any corrosion or pitting that appears detrimental to the function of the valve. The part can be polished as long as the outside diameter of the where the Spring Seal (Main Piston) rides must be .970 ± .001" (24.64 ± 0.03 mm) on 39MV22 model or .812 ± .001" (20.63 ± 0.03 mm) on 39MV72. A surface finish of 8 RMS must be maintained for proper sealing on these surfaces.
2. Piston Nose: Galling or excessive wear on the diameter where the spring seals engage. Any corrosion or pitting that appears detrimental to the function of the valve. The part can be polished as long as the outside diameter of the stem remains at .243 ± .001" (6.17 ± 0.03 mm). The stem itself must have a T.I.R of .001" (0.03 mm) along its length.
3. Insert Top: Galling or excessive wear on the inside diameter that guides the Main Piston. Check for any corrosion or pitting. Also, check for galling of threads.
4. Insert Bottom: Galling or excessive wear on the inside diameter that guides the Main Piston. Check for any corrosion or pitting.
5. Adjuster Top: Galling or excessive wear on the inside diameter that guides the Main Piston. Check for any corrosion or pitting. Also, check for galling of threads.
6. Adjuster Bottom: Galling or excessive wear on the inside diameter that guides the Main Piston. Check for any corrosion or pitting. Also, check for galling of threads.
7. Vent Seal Adaptor: Check for any corrosion or pitting.
8. Top Plate: Galling or excessive wear on the inside diameter that guides the Main Piston. Check for any corrosion or pitting. Also, check for galling of threads.
9. Bonnet: Check for any corrosion or pitting. Also, check for galling of threads for the compression screw and where it attaches to the Pilot Base.
10. Compression Screw: Galling at the spherical bearing surface or in the thread. Check for any corrosion or pitting.
11. Spring Washer(s): Galling at the spherical bearing surface. Check for any corrosion or pitting.
12. Pilot Base: Check for any corrosion or pitting. Also, check for galling of threads.
13. Spring: Check for any corrosion or pitting.

If any damage listed above is present, the part should be replaced or repaired per instruction. Other valve parts may be acceptable with light corrosion, pitting, or minor damage of other types if it can be determined that it will not affect product performance. All O-Rings and spring seals should be replaced each time the valve is disassembled.

Refer to Tables 25 and 26 for O-Ring/Spring Seal repair kits. Recommended spare parts are listed in Table 23.

XIX. Reassembly of Pilot Valve

A. Lubricants and Sealants

1. Lubricate all O-Rings, except those made from silicone, and spring seals sparingly with silicone grease Dresser P/N SP505.
2. Seal all pipe threads with Teflon tape or pipe sealant (Dresser P/N SP364-AB).
3. Lubricate standard threads and bearing points with Flourolube GR362 (Dresser P/N 4668601) or equivalent.

B. Assembly of 39PV07/37

1. Making the Main Pilot.
2. Making the Adjuster Assembly,

   This assembly consists of:

   1 – Adjuster Bottom

   1 – Adjuster Top

   1 – Spring Seal (Adjuster Top)

   1 – O-Ring (Adjuster Top)

   1 – O-Ring (Adjuster Bottom)

   a. Check the Adjuster Top for burrs at the spring seal lead in chamfer. Remove any burrs using a polishing cloth.

   b. Install Spring Seal (Adjuster Top) into Adjuster Top using insertion tool as shown in Figure 80.

      i. Lubricate Spring Seal (Adjuster Top) with silicone grease.

      ii. Install Spring Seal (Adjuster Top) onto Plunger Cylinder with spring facing away from Plunger Cylinder.

      iii. Insert Plunger into Plunger Cylinder until Plunger lightly contacts Spring Seal (Adjuster Top).

      iv. Insert Funnel Tube, chamfer side first, over the Plunger and Spring Seal (Adjuster Top). Stop when Spring Seal (Adjuster Top) is about half way inside the Funnel Tube as shown in Figure 46.

      v. Remove Plunger.

      vi. Insert Funnel Tube Assembly into Adjuster Top until Funnel Tube contacts Spring Seal (Adjuster Top) gland.

      viii. Push down on Plunger cylinder to insert Spring Seal (Adjuster Top) into Adjuster Top as shown in Figure 47.

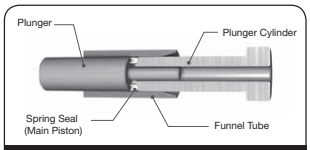

Figure 46: Funnel Tube

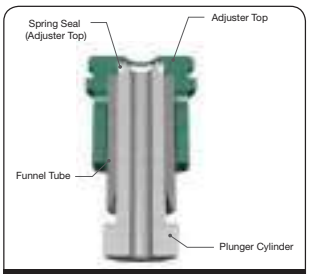

Figure 47: Plunger Cylinder

      viii. Remove Funnel Tube Assembly.

      ix. Inspect Adjuster Top to make sure that Spring Seal (Adjuster Top) did not flare out during installation and that the Spring Seal (Adjuster Top) is oriented as shown in Figure 48.

Figure 48: Adjuster Top Assembly

XIX. Reassembly of Pilot Valve (Contd.)

c. Thread Adjuster Top clockwise onto Adjuster bottom and torque to 27±2 ft-lbs (37± 2.7 N-m).

d. Lubricate Main Piston stem and cycle Main Piston through Spring Seal (Adjuster Top) five times.

Note: Do not install adjuster assembly into Pilot Base with O-Rings installed without wrench tightening Adjuster Top to Adjuster Bottom together. Adjuster Top can get stuck in Pilot Base if the Adjuster Top is not tighten properly.

e. Install O-Ring (Adjuster Top) into groove on Adjuster Top.

f. Install O-Ring (Adjuster Bottom) into groove on Adjuster Bottom. Install from the opposite end of the square wrenching flats.

g. Lightly lubricate both external O-Rings on Adjuster Assembly. Install Adjuster Assembly into Pilot Base with the Adjuster Top going in first. Rotate the assembly clockwise during installation until the threads are engaged. This helps the O-Rings get by chamfers and holes.

h. Continue to turn Adjuster Assembly clockwise into Pilot Base until it stops.

i. Turn Adjuster Assembly counterclockwise the number of flats that was recorded in Disassembly Instructions (Section XVII.A), step 16.

j. Thread the Adjuster Lock Nut clockwise onto the Adjuster Assembly hand tight.

k. Thread Adjuster Cap clockwise onto Adjuster Assembly hand tight.

Note: Make sure Adjuster Cap and Adjuster Lock Nut threads freely on Adjuster Bottom. Adjuster Assembly may be inadvertently rotated if these two parts do not fit loosely.

3. The Insert Assembly of the pilot consists of:

1 – Insert Top

1 – Insert Bottom

1 – Spring Seal (Insert)

1 – O-Ring (Insert)

a. Press Spring Seal (Insert) into groove on the Insert Bottom. Make sure spring is facing upwards.

b. Install Insert Top over Insert Bottom with the spring seal side going in first.

c. Lightly lubricate O-Ring groove now formed by the two insert parts. This lubrication is used to hold the O-Ring in place when it is being inserted into Pilot Base.

d. Place O-Ring (Insert) into groove.

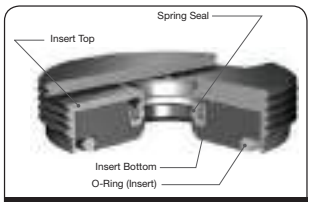

Figure 49: Insert Assembly

e. Final Insert Assembly is shown in Figure 49.

f. Turn Insert Assembly over and thread into Pilot Base with T-handle groove wrench (Part #4995401 Figure 81). Tighten wrench tight. Make sure milled slot is facing up.

g. Lubricate Main Piston stem and cycle Main Piston through Spring Seal (Insert) five times.

Note: For Dirty Service Option, please refer to assembly instructions included in the Dirty Service Option section (Section XXII.B.4).

4. Install O-Ring (Top Plate) into groove on top of Pilot Base.

Note: For Dirty Service Option, O-Ring (Top Plate) is installed into groove on top of the Dirty Service Insert.

a. Lubricate the Spring Seal (Main Piston) and Top Plate gland. Install the Spring Seal (Main Piston) into Top Plate. The spring should be oriented as shown in Figures 50 or 51.

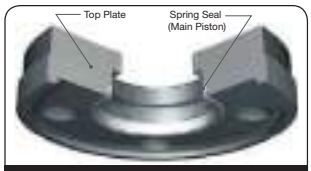

Figure 50: Top Plate (39PV07)

b. Lubricate Main Piston before installing. Install the Main Piston into the Top Plate with the Spring Washer bearing point going in first. Be careful not to damage the Spring Seal (Main Piston).

XIX. Reassembly of Pilot Valve (Contd.)

Figure 51: Top Plate (39PV37)

5. Install Main Piston / Top Plate Assembly into Pilot Base by inserting small diameter end of Main Piston through Insert Assembly.

Note: For Dirty Service Option, install Main Piston / Top Plate Assembly into Dirty Service Insert instead of Pilot Base.

6. Insert the four Cap Screws (Top Plate) through the Top Plate and thread into the Pilot Base. Tighten to 25±2 ft-lbs (34±2.7 N-m).

a. If removed, thread Compression Screw Lock Nut clockwise onto Compression Screw.

7. Thread Compression Screw into top of Bonnet until the bearing point begins to protrude through Bonnet.

8. Place Spring Washers on the ends of the Spring. There is not a top or bottom Spring Washer unless the Lifting Lever option is installed.

9. If pilot has Lifting Lever Option:

a. Place Spring over Lifting Stem and place on Bottom Spring Washer.

b. Place Top Spring Washer on top of Spring and then place the entire assembly on top of Pilot Base assembly ensuring that the spherical radius located on the Bottom Spring Washer engages with spherical nose on Main Piston.

10. Install the Bonnet over the Spring and Spring Washer Assembly. Thread the Bonnet onto the Top Plate. Tighten wrench tight. Install and tighten Set Screw.

11. Turn Compression Screw clockwise until dimension has been reached that was noted during disassembly.

12. Tighten Compression Screw Lock Nut wrench tight.

13. For Lifting Lever Option, reinstall Release Nut and Release Lock Nut onto Lifting Stem. Turn clockwise until it matches the dimension noted during disassembly.

14. Install Filter Plug into Bonnet vent hole (if removed).

15. Install Pipe Plug (Pilot Valve) in port above vent hole (if removed).

16. Refer to Field Test Connection / Backflow Preventer Option (Section XXII.A) for reassembly of Field Test Connection.

C. Assembly of 39MV07

1. Making the Main Pilot.

2. Making the Adjuster Assembly,

This assembly consists of:

1 – Adjuster Bottom

1 – Adjuster Top

1 – Spring Seal (Adjuster Top)

1 – O-Ring (Adjuster Top)

1 – O-Ring (Adjuster Bottom)

a. Check the Adjuster Top for burrs at the spring seal lead in chamfer. Remove any burrs using a polishing cloth.

b. Install Spring Seal (Adjuster Top) into Adjuster Top using insertion tool as shown in Figure 80.

i. Lubricate Spring Seal (Adjuster Top) with silicone grease.

ii. Install Spring Seal (Adjuster Top) onto Plunger Cylinder with spring facing away from Plunger Cylinder.

iii. Insert Plunger into Plunger Cylinder until Plunger lightly contacts Spring Seal (Adjuster Top).

iv. Insert Funnel Tube, chamfer side first, over the Plunger and Spring Seal (Adjuster Top). Stop when Spring Seal (Adjuster Top) is about half way inside the Funnel Tube as shown in Figure 46.

v. Remove Plunger.

vi. Insert Funnel Tube Assembly into Adjuster Top until Funnel Tube contacts Spring Seal (Adjuster Top) gland.

viii. Push down on Plunger cylinder to insert Spring Seal (Adjuster Top) into Adjuster Top as shown in Figure 47.

viii. Remove Funnel Tube Assembly.

ix. Inspect Adjuster Top to make sure that Spring Seal (Adjuster Top) did not flare out during installation and that the Spring Seal (Adjuster Top) is oriented as shown in Figure 48.

XIX. Reassembly of Pilot Valve (Contd.)

c. Thread Adjuster Top clockwise onto Adjuster bottom and torque to 27±2 ft-lbs (37± 2.7 N-m).

d. Lubricate Main Piston stem and cycle Main Piston through Spring Seal (Adjuster Top) five times.

Note: Do not install adjuster assembly into Pilot Base with O-Rings installed without wrench tightening Adjuster Top to Adjuster Bottom together. Adjuster Top can get stuck in Pilot Base if Adjuster Top is not tighten properly.

e. Install O-Ring (Adjuster Top) into groove on Adjuster Top.

f. Install O-Ring (Adjuster Bottom) into groove on Adjuster Bottom. Install from the opposite end of the square wrenching flats.

g. Lightly lubricate both external O-Rings on Adjuster Assembly. Install Adjuster Assembly into Pilot Base with the Adjuster Top going in first. Rotate the assembly clockwise during installation until the threads are engaged. This helps the O-Rings get by chamfers and holes.

h. Continue to turn Adjuster Assembly clockwise into Pilot Base until it stops.

i. Turn Adjuster Assembly counterclockwise the number of flats that was recorded in Disassembly Instructions (Section XVII.B), step 16.

j. Thread the Adjuster Lock Nut clockwise onto the Adjuster Assembly hand tight.

k. Thread Adjuster Cap clockwise onto Adjuster Assembly hand tight.

Note: Make sure Adjuster Cap and Adjuster Lock Nut threads freely on Adjuster Bottom. Adjuster Assembly may be inadvertently rotated if these two parts do not fit loosely.

3. The Insert Assembly of the pilot consists of:

1 – Insert Top

1 – Insert Bottom

1 – Spring Seal (Insert)

1 – O-Ring (Insert)

a. Press Spring Seal (Insert) into groove on the Insert Bottom. Make sure spring is facing upwards.

b. Install Insert Top over Insert Bottom with the spring seal side going in first.

c. Lightly lubricate O-Ring groove now formed by the two insert parts. This lubrication is used to hold the O-Ring in place when it is being inserted into Pilot Base.

d. Place O-Ring (Insert) into groove.

e. Final Insert Assembly is shown in Figure 49.

f. Turn Insert Assembly over and thread into Pilot Base with T-handle groove wrench (Part #4995401, Figure 81). Tighten wrench tight. Make sure milled slot is facing up.

g. Lubricate Main Piston stem and cycle Main Piston through Spring Seal (Insert) five times.

Note: For Dirty Service Option, please refer to assembly instructions included in the Dirty Service Option section.

4. Install O-Ring (Top Plate) into groove on top of Pilot Base.

Note: For Dirty Service Option, O-Ring (Top Plate) is installed into groove on top of the Dirty Service Insert.

a. Lubricate the Spring Seal (Main Piston) and Top Plate gland. Install the Spring Seal (Main Piston) into Top Plate. The spring should be oriented as shown in Figure 50.

b. Lubricate Main Piston before installing. Install the Main Piston into the Top Plate with the Spring Washer bearing point going in first. Be careful not to damage the Spring Seal (Main Piston).

5. Install Main Piston / Top Plate Assembly into Pilot Base by inserting small diameter end of Main Piston through Insert Assembly.

Note: For Dirty Service Option, install Main Piston / Top Plate Assembly into Dirty Service Insert instead of Pilot Base.

6. Insert the four Cap Screws (Top Plate) through the Top Plate and thread into the Pilot Base. Tighten to 25 ± 2 ft-lbs (34 ± 2.7 N-m).

Note: If removed, thread Compression Screw Lock Nut clockwise onto Compression Screw.

7. Thread Compression Screw Lock Nut clockwise onto Compression Screw.

8. Thread Compression Screw into top of Bonnet until the bearing point begins to protrude through Bonnet.

9. Place Spring Washers on the ends of the Spring. There is not a top or bottom Spring Washer unless the Lifting Lever option is installed.

10. If pilot has Lifting Lever Option:

a. Place Spring over Lifting Stem and place on Bottom Spring Washer.

b. Place Top Spring Washer on top of Spring and then place the entire assembly on top of Pilot Base assembly ensuring that the spherical radius located on the Bottom Spring Washer engages with spherical nose on Main Piston.

11. Install the Bonnet over the Spring and Spring Washer Assembly. Thread the Bonnet onto the Top Plate. Tighten wrench tight. Install and tighten Set Screw.

12. Turn Compression Screw clockwise until dimension has been reached that was noted during disassembly.

XIX. Reassembly of Pilot Valve (Contd.)

13. Tighten Compression Screw Lock Nut wrench tight.

14. For Lifting Lever Option, reinstall Release Nut and Release Lock Nut onto Lifting Stem. Turn clockwise until it matches the dimension noted during disassembly.

a. Install Filter Plug into Bonnet vent hole (if removed).

15. Install Pipe Plug (Pilot Valve) in port above vent hole.

16. Refer to Field Test Connection / Backflow Preventer Option for reassembly of Field Test Connection

17. Making The Modulator Piston Assembly:

a. Install Spring Seal (Piston Top) into groove on Modulator Piston Top. Be sure to have the spring in the seal facing up.

b. Install O-Ring (Modulator Seat) into groove on Modulator Piston Bottom.

c. Turn Modulator Piston Bottom over and place O-Ring (Modulator Piston Bottom) into inner groove.

d. Install Spring Seal (Piston Bottom) onto Modulator Piston Bottom in outer groove. Make sure spring is facing down.

e. Insert Modulator Piston Top into Modulator Piston Bottom through the side with the O-Ring (Modulator Piston Bottom) and the Spring Seal (Piston Bottom).

f. Turn assembly over and install O-Ring Retainer. The chamfered outside diameter goes in first.

g. Thread Lock Screw through the O-Ring Retainer into Modulator Piston Top. Tighten 40 ± 5 in-lbs (4.5 ± 0.6 N-m).

h. Final Modulator Piston Assembly is shown in Figure 52.

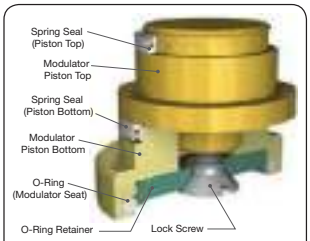

Figure 52: Modulator Piston Assembly

15. Lubricate Spring Seals before inserting into Modulator Base.

16. Insert Modulator Piston Assembly into Modulator Base with the Modulator Piston Top going in first. Push piston in with thumbs until it stops. There will be some resistance due to the Spring Seals compressing to fit into the bore of the Modulator Base. If necessary for installation, insert the proper wrench into the Lock Screw. Lightly tapping the wrench with a hammer will force the Modulator Piston Assembly into the Modulator base.

17. Install both O-Rings (Modulator Stop) into grooves on Modulator Piston Stop.

18. Insert Modulator Stop into Modulator Base with the seat going in first. Make sure the side hole in the Modulator Stop is facing towards the flat side of the Modulator Base.

19. Thread the Cap Screws (Modulator) through the Modulator Stop into the Modulator Base. Tighten to 365 ± 30 in-lbs (41.2±3.4 N-m).

20. Do not install Modulator Assembly at this time.

D. Assembly of 39MV22/72

Making the Main Pilot.

1. Making the Main Piston Assembly

a. Insert the Piston Nose into the recess at the threaded end of the Piston Top.

b. Slide the Piston Nut over the Piston Nose and thread it onto the Piston Top. Place the assembly in a vice with soft jaws and torque the Piston Nut to 30 ± 3 ft-lbs (40.6±4 N-m).

c. Install the Set Screw into the threaded hole of the Piston Nut and hand tighten.

2. Making the Adjuster Assembly,

This assembly consists of:

1 – Adjuster Bottom

1 – Adjuster Top

1 – Vent Seal Adaptor

1 – Spring Seal (Adjuster Top)

1 – Spring Seal (Adjuster Bottom)

1 – O-Ring (Adjuster Top)

1 – O-Ring (Adjuster Bottom)

a. Check the Adjuster Top for burrs at the spring seal lead in chamfer. Remove any burrs using a polishing cloth.

XIX. Reassembly of Pilot Valve (Contd.)

b. Install Spring Seal (Adjuster Top) into Adjuster Top using insertion tool as shown in Figure 80.

i. Lubricate Spring Seal (Adjuster Top) with silicone grease.

ii. Install Spring Seal (Adjuster Top) onto Plunger Cylinder with spring facing away from Plunger Cylinder.

iii. Insert Plunger into Plunger Cylinder until Plunger lightly contacts Spring Seal (Adjuster Top).

iv. Insert Funnel Tube, chamfer side first, over the Plunger and Spring Seal (Adjuster Top). Stop when Spring Seal (Adjuster Top) is about half way inside the Funnel Tube as shown in Figure 46.

v. Remove Plunger.

vi. Insert Funnel Tube Assembly into Adjuster Top until Funnel Tube contacts Spring Seal (Adjuster Top) gland.

vii. Push down on Plunger cylinder to insert Spring Seal (Adjuster Top) into Adjuster Top as shown in Figure 47.

viii. Remove Funnel Tube Assembly.

ix. Inspect Adjuster Top to make sure that Spring Seal (Adjuster Top) did not flare out during installation and that the Spring Seal (Adjuster Top) is oriented as shown in Figure 48.

c. Install the Spring Seal (Adjuster Bottom) onto the Adjuster Bottom with spring side down as shown in Figure 48.

d. Place the Vent Seal Adaptor onto the Spring Seal (Adjuster Bottom) with flat side up.

e. Thread Adjuster Top clockwise onto Adjuster bottom and torque to 27±2 ft-lbs (37± 2.7 N-m).

f. Lubricate Main Piston stem and cycle Main Piston through Spring Seal (Adjuster Top) and Spring Seal (Vent Seal Adaptor) five times.

Note: Do not install adjuster assembly into Pilot Base with O-Rings installed without wrench tightening Adjuster Top to Adjuster Bottom together. Adjuster Top can get stuck in Pilot Base if Adjuster Top is not tightened properly.

g. Install O-Ring (Adjuster Top) into groove on Adjuster Top.

h. Install O-Ring (Adjuster Bottom) into groove on Adjuster Bottom. Install from the opposite end of the square.

i. Lightly lubricate both external O-Rings on Adjuster Assembly. Install Adjuster Assembly into Pilot Base with the Adjuster Top going in first. Rotate the assembly clockwise during installation until the threads are engaged. This helps the O-Rings get by chamfers and holes.

j. Continue to turn Adjuster Assembly clockwise into Pilot Base until it stops.

k. Turn Adjuster Assembly counterclockwise the number of flats that was recorded in Disassembly Instructions (Section XVII.C), step 16.

l. Thread the Adjuster Lock Nut clockwise onto the Adjuster Assembly hand tight.

m. Thread Adjuster Cap clockwise onto Adjuster Assembly hand tight.

Note: Make sure Adjuster Cap and Adjuster Lock Nut threads freely on Adjuster Bottom. Adjuster Assembly may be inadvertently rotated if these two parts do not fit loosely.

3. The Insert Assembly of the pilot consists of:

1 – Insert Top

1 – Insert Bottom

1 – Spring Seal (Insert)

1 – O-Ring (Insert)

a. Press Spring Seal (Insert) into groove on the Insert Bottom. Make sure spring is facing upwards.

b. Install Insert Top over Insert Bottom with the spring seal side going in first.

c. Lightly lubricate O-Ring groove now formed by the two insert parts. This lubrication is used to hold the O-Ring in place when it is being inserted into Pilot Base.

d. Place O-Ring (Insert) into groove.

e. Final Insert Assembly is shown in Figure 49.

f. Turn Insert Assembly over and thread into Pilot Base with T-handle groove wrench (Part #4995401 Figure 81). Tighten wrench tight. Make sure milled slot is facing up.

XIX. Reassembly of Pilot Valve (Contd.)

g. Lubricate Main Piston stem and cycle Main Piston through Spring Seal (Insert) five times.

Note: For Dirty Service Option, please refer to Dirty Service Option in section XXII.B for assembly instructions.

4. Install O-Ring (Top Plate) into groove on top of Pilot Base.

Note: For Dirty Service Option, O-Ring (Top Plate) is installed into groove on top of the Dirty Service Insert.

a. 39MV22

i. Lubricate the Spring Seal (Main Piston) and Top Plate gland. Install the Spring Seal (Main Piston) into Top Plate. The spring should be oriented as shown in Figure 51.

ii. Lubricate Main Piston before installing. Install the Main Piston into the Top Plate with the Spring Washer bearing point going in first. Be careful not to damage the Spring Seal (Main Piston).

b. 39MV72

i. Lubricate the backup rings. Back-up Ring (Upper) should be installed first with angle surface facing you when installed.

ii. Back-up Ring (Lower) should be installed second with angle facing away from you when installed.

iii. Lubricate Spring Seal (Main Piston) and Top Plate gland. Install Spring Seal (Main Piston) into the Top Plate. The spring and back-up rings should be oriented as shown in Figure 51.

iv. Lubricate Main Piston Assembly before installing. Install Main Piston into the Top Plate with Spring Washer bearing point going in first. Be careful not to damage Spring Seal (Main Piston).

5. Install Main Piston / Top Plate Assembly into Pilot Base by inserting small diameter end of Main Piston through Insert Assembly.

Note: For Dirty Service Option, install Main Piston / Top Plate Assembly into Dirty Service Insert instead of Pilot Base.

6. Insert the four Cap Screws (Top Plate) through the Top Plate and thread into the Pilot Base. Tighten to 25±2 ft-lbs (34±2.7 N-m).

7. If removed, thread Compression Screw Lock Nut clockwise onto Compression Screw.

8. Thread Compression Screw into top of Bonnet until the bearing point begins to protrude through Bonnet.

9. Place Spring Washers on the ends of the Spring. There is not a top or bottom Spring Washer unless the Lifting Lever option is installed.

10. If pilot has Lifting Lever Option:

a. Place Spring over Lifting Stem and place on Bottom Spring Washer.

b. Place Top Spring Washer on top of Spring and then place the entire assembly on top of Pilot Base assembly ensuring that the spherical radius located on the Bottom Spring Washer engages with spherical nose on Main Piston.

10. Install the Bonnet over the Spring and Spring Washer Assembly. Thread the Bonnet onto the Top Plate. Tighten wrench tight. Install and tighten Set Screw.

11. Turn Compression Screw clockwise until dimension has been reached that was noted during disassembly.

12. Tighten Compression Screw Lock Nut wrench tight.

13. For Lifting Lever Option, reinstall Release Nut and Release Lock Nut onto Lifting Stem. Turn clockwise until it matches the dimension noted during disassembly.

14. Install Filter Plug into Bonnet vent hole (if removed).

15. Install Pipe Plug (Pilot Valve) in port above vent hole (if removed).

16. Refer to Field Test Connection / Backflow Preventer Option (Section XXII.A) for reassembly of Field Test Connection.

XX. Setting and Testing

A. General Information

1. Before putting the reconditioned valve in service, it must be set to open at the required set pressure. Although the valve can be set on the service installation, it is more convenient to set the valve and check seat tightness on a test stand.

2. Test Equipment:

The test stand used for testing POSRVs normally consists of a pressure source supply line with a throttle valve and receiver that have the following features:

a. Outlet for attaching the valve to be tested

b. Pressure gauge with a shutoff valve

c. Drain line with a shutoff valve

d. Adequate receiver volume for the valve to be tested and to achieve proper operation

3. Test Media:

For best results, valves shall be tested by type, as follows:

a. Steam valves are tested on saturated steam.

b. Air or gas valves are tested on air or gas at ambient temperature.

c. Liquid valves are tested on water at ambient temperature.

B. With Standard Options

Note: Seal all pipe threads with a non-organic sealant or Teflon® tape.

B.1 39PV07/37

1. Attach pilot to main valve using two Socket Head Cap Screws (Bracket).

2. Install the 3/8" O.D. tubes (Refer to Table 13 for sizing of tubing) into the fittings for the inlet and dome ports. Make sure the tube ends are fully inserted before torquing. Begin torquing the fitting, about midway down; verify that Swagelok Gap Inspection Gauge (Swagelok P/N MS-IG-468) will go. Continue to torque down fitting until Swagelok Gap Inspection Gauge will not go. After torquing, remove to assure the ferrule is in good contact with the tubing. Refer to Table 14 and Figure 53 to determine if ferrule has seated itself properly. Reinstall the tubing.

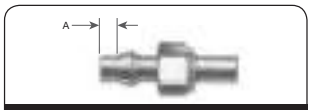

Figure 53: Tubing Dimensions

Table 13: Ferrule Wall Thickness

Pressure Class	Wall Thickness (min.)	
	in.	mm
150# to 900#	.035	0.89
1500#	.049	1.24
2500#	.065	1.65

Table 14: Tubing Dimensions

Tubing Diameter		Tubing Length (A)	
in.	mm	in.	mm
.250	6.35	.190	4.83
.375	9.53	.250	6.35
.500	12.70	.340	8.64

3. The vent port of the pilot valve is vented to atmosphere in standard configuration.

4. Final standard configuration for a 39PV07 or 39PV37 without any options is shown in Figure 54.

Figure 54: 39PV07/37

XX. Setting and Testing (Contd.)

B.2 39MV07, 39MV22 AND 39MV72

1. Attach Pilot to Main Valve using two Socket Head Cap Screws (Bracket).

Figure 55: 39MV07

Figure 56: 39MV22

2. Install the tubes into the fittings for the inlet and dome ports. Make sure the tube ends are fully inserted before torquing. Begin torquing the fitting, about midway down, verify that Swagelok Gap Inspection Gauge (Swagelok P/N MS-IG-468) will go. Continue to torque down fitting until Swagelok Gap Inspection Gauge will not go. After torquing, remove to assure the ferrule is in good contact with the tubing. Reinstall the tubing.

3. Install tubing to connect the vent port of the Pilot to the outlet of the Main Valve in the standard configuration.

4. Final standard configuration for the modulation pilot valves without any options is shown in Figures 55 through 57.

Figure 57: 39MV72

C. With Sensing Ring Option

(Figure 58)

Remote sensing is the standard pressure connection to the pilot valve used on the 2900 Pilot Operated Safety Relief Valve. However with the Sensing Ring Option, the pilot valve pressure can be picked up just before the inlet of the main valve.

The gaskets which are supplied by the customer are to be inserted between the Valve Nozzle and the Sensing Ring and between the Sensing Ring and the test system flange.

XX. Setting and Testing (Contd.)

Figure 58: with Optional Line Filter

Reasons for failure:

1. Any leakage from Pilot at 4% below valve set pressure or 2 psig (0.14 psig), whichever is greater. The 39MV22 and 39MV72 may have 50 bubbles per minute at 5% below the set pressures at or above 2251 psig (155.2 barg) and none at pressures below 2250 psig (155.1 barg).
2. Main Valve equipped with soft seats.
   a. For Main Valve equipped with 39MV22 and 39MV72, no leakage (0 bpm) is acceptable at 5% below valve set pressure or 2 psig (0.14 barg), whichever is greater. For set pressures 2250 psig (155.1 barg) and above, 50 bpm is acceptable for both Pilot and Main Valve.
   b. For all other valve types, no leakage (0 bpm) is acceptable at 4% below valve set pressure or 2 psig (0.14 barg), whichever if greater.
      (i) Paragraph 2.b(ii) refers to testing valves with Teflon O-rings specified for elevated temperatures above 200ºF (93 °C).
      (ii) Check the unit ticket for the temperature and verify that it is above 200ºF (93°C). Test air/gas valves on room temperature air and check for leakage. If the valve is tight, testing is complete. If not, check the valve leakage on elevated temperature air between 201-500ºF (94-260°C).

Note: No need to pop the valve on elevated temperature air.

      (iii) Test liquid valves on room temperature water and check for leakage. If the valve is tight, testing is complete. If not, check the valve leakage on elevated temperature water between 201 - 500ºF (94 - 260°C).

Note: No need to pop the valve on elevated temperature water.

3. Main Valve equipped with metal seats and air as test media.
   a. An initial leakage test of the Main Valve shall be made using a piece of wet paper placed over the outlet of the valve for one minute with pressure held at 4% below valve set pressure or 2 psig (0.14 barg), whichever is greater.
   b. If leakage from Main Valve is indicated by a bulging of the wet paper, the standard test fixture (as described in 3.c shall be installed on the outlet flange to determine the extent of the leakage. The test fixture is to be connected to the valve outlet in such a manner that no leakage may occur in the connection.
   c. Per API standard 527 (ANSI B147.1-72) a standard test fixture consists of a piece of tubing 5/16" OD (8 mm) x .032" (0.8 mm) wall, where one end is joined to an adaptor on the valve outlet and other end is immersed .500" (12.7 mm) below the surface of a reservoir of water.

D. Troubleshooting Leakage

1. To isolate leakage that may be coming from the pilot, disconnect the pilot vent line (if applicable) from the main base outlet and plug the main valve outlet connection. If wet paper still bulges, then leakage is occurring from main valve.
2. Leakage from main valve can come from either the main valve seat, nozzle seal or dome seal. To determine if the leakage is from either the main valve seat or nozzle seal, the outlet must be filled to above the seat line and checked for bubbles. If no bubbles are present, then leakage is either coming from the dome seal.
3. The leakage rate shall be determined with the valve mounted vertically and using a standard test fixture as described in 3.c in Section XX.C. The leakage rate in bubbles per minute shall be determined with pressure held at 4% below valve set pressure or 2 psig (0.14 barg), whichever is greater. The test pressure shall be applied for 1 minute for valves of inlet sizes through 2" (50.8 mm); 2 minutes for sizes 2.5" (63.5 mm), 3" (76.2 mm) & 4" (101.6 mm); 5 minutes for sizes 6" (152.4 mm) and 8" (203.2 mm).
4. The leakage rate in bubbles per minute shall not exceed the values in Table 15.

XX. Setting and Testing (Contd.)

Table 15: Leakage Rate

Set Pressure at 60°F (15.6°C)		Effective Orifice Sizes ≤ 0.307 in² (1.981 cm²) D & E Orifice Only		Effective Orifice Sizes > 0.307 in² (1.981 cm²) F Orifice & Larger	
		Approximate Leakage per 24 Hours		Approximate Leakage per 24 Hours	
psig	barg	Bubbles per minute	Standard Cubic Feet	Bubbles per minute	Standard Cubic Feet
15-1000	1.03-68.95	40	0.60	20	0.30
1500	103.42	60	0.90	30	0.45
2000	137.90	80	1.20	40	0.60
2500	172.37	100	1.50	50	0.75
3000	206.84	100	1.50	60	0.90
4000	275.79	100	1.50	80	1.20
5000	344.74	100	1.50	100	1.50
6000	413.69	100	1.50	100	1.50

5. Main Valve equipped with metal seats and water as the test media.
   a. No leakage shall be detected by sight or feel for one minute, when pressure is held at 4% below valve set pressure or 2 psig (0.14 barg), whichever is greater.
6. Media valve equipped with metal seats and steam as the test media.
   a. Leak tightness shall be checked visually using a black background. There shall be no visual or audible leakage after the interior or the valve is allowed to dry after popping. The leak test pressure shall be when pressure is held at 4% below valve set pressure or 2 psig (0.14 barg), whichever is greater.
7. Blowdown is long (only consider if system is capable of flowing valve at 10% overpressure).
8. Set point cannot be adjusted to consistently release at ±2% of unit ticket set pressure or 2 psig (0.14 barg), whichever is greater.
9. Repeat set point verification tests 3 times.
   a. Inlet pressure ramp guidelines.
      (i) When set pressure is below or equal to 750 psig (51.7 barg), the inlet pressure ramp should not exceed 0.5 psig (0.03 barg), per second, when test pressure is within 90% of set pressure.
      (ii) When set pressure is above 750 psig (51.7 barg), the inlet pressure ramp should not exceed 1.0 psig (0.07 barg) per second, when test pressure is within 90% of set pressure.
   b. For the 39MV22 and 39MV72 pilots, venting will and must begin before the set point. The 39MV22 begins venting at 98% of set pressure and the 39MV72 begins venting at 97% of set pressure.
   c. Drop system to 90% of set pressure between cycles.
   d. The 3 tests should be within ±2% of unit ticket set pressure or 2 psig (0.14 barg), whichever is greater.
   e. If blowdown is being checked, the following guidelines are to be followed.

Note: blowdown can be set and checked on the main valve only if the system can achieve 10% over pressure.

      (i) 39PV model (gas/steam): less than or equal to 5% or 3 psig (0.20 barg), whichever is greater.
      (ii) 39PV model (liquid): between 7% and 4%. If set pressure is less than 30 psig (2.1 barg), 3 psig (0.20 barg), or less.
      (iii) 39MV model (gas/steam): less than or equal to 4% or 2 psig (0.14 barg), whichever is greater.
      (iv) 39MV model (liquid): between 7% and 4%. If set pressure is less than 30 psig (2.1 barg), 3 psig (0.20 barg), or less.

Note: Customer requirements may note a variation to the standard blowdown. Customers request takes priority.

   f. If adjustments are necessary, adjust Compression Screw or Adjuster and retighten corresponding lock nut. Retest beginning at step 9.
   g. Increase pressure from 90% of set pressure to 4% below set pressure or 2 psig (0.14 barg), whichever is greater, and check all ports and connections for leakage on Pilot and Main Valve.
10. Back pressure testing for leakage
   a. Backpressure is the pressure measured at the valve outlet, in pounds per square inch gauge (psig or barg).
   b. Backpressure tests are to be performed after adjustment of set pressure and blowdown on each

XX. Setting and Testing (Contd.)

valve designed for use in a closed system having an inlet size greater than 1" (25.4 mm) NPS.

   c. The pressure, at which the valve is to be backpressure tested, shall be 30 psig (2.1 barg) (minimum) or system backpressure, whichever is higher. Air or nitrogen shall be used as the test medium for applying backpressure.
   d. Backpressure tests are to be performed by applying pressure with air or nitrogen to the valve outlet. Leakage may be detected by application of soap solution, or equivalent, at points of possible leakage. Pressure is to be held constant at the test pressure while the valve is being examined for leakage.
   e. The following points shall be examined for leakage during backpressure testing.
      (i) Cover Plate, inlet and outlet joints.
      (ii) All tube fittings and connections.
      (iii) Possible point of leakage on the pilot valve.
11. Repair of valves which show leaks in backpressure testing may be attempted by tightening the joint involved to normal tightness, while the valve is in the testing area. The valve is to be examined for cause of failure, the cause corrected, and the test repeated.

E. Conversions between Conventional and Bellows Type

Table 16 shows the requirements to convert between Conventional configurations and a Bellows configurations.

Table 16: Conventional to Bellows Conversion

Valve	New Parts To Convert From			
Orifice Size	Conventional to Bellows Valve		Bellows to Conventional Valve	
ALL Orifices	1	Bellows Assembly Standard Material, AISI 316L Stainless Steel	1	Set of gaskets for conventional valve
	2	Set of gaskets for bellows valve	2	Pipe Plug
	3	Disc holder for bellows valve		
	4	Cover Plate[1]		

Note1: Conventional Cover Plate may be modified to work on a bellows valve.

F. Field Testing of POSRV Assembly

F.1 Field Test Connection

A 1/4" FNPT field test connection (Figure 59) is standard on all pilot valve types. This allows the stroking of the valve with an auxiliary media, e.g. air or nitrogen. An internal check valve is present in the field test connection isolating the inlet media from the test media and at the same time, allowing the valve to open normally in the event of a system over pressurization during a field test.

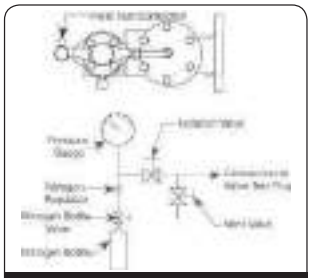

Figure 59: Typical Field Test Arrangement

F.2 Pilot Valve Tester

The pilot valve test indicator is available for the modulating and pop action pilot valves. The valve test indicator measures the set pressure of the pilot, while maintaining pressure on the main valve dome area; thereby, allowing only the pilot to actuate. The system shown in Figure 60 is available for remote or local testing.

Figure 60: Pilot Valve Tester

XXI. Trouble Shooting

Table 17: Troubleshooting 2900 Series POSRV's

Problem	Possible Cause	Corrective Action
Blowdown incorrect	A. Incorrect Adjuster Assembly setting	A. Re-set Adjuster Assembly (See Pilot Valve Setting)
Leakage around fittings	A. Fittings are not tightened or are cross threaded.	A. Re-install fittings correctly
	B. Did not install Teflon tape or pipe sealant.	B. Re-install fittings with Teflon tape or pipe sealant.
Leakage under the Cover Plate when valve is open.	A. Guide or Cover Plate Gasket/O-ring is damaged.	A. Disassemble valve and replace Cover Plate Gasket/O-ring.
	B. Cap Screws or Stud Nuts on Cover Plate are loose.	B. Tighten as required.
Main Valve leaks through the Seat	A. Damaged Seat O-Ring	A. Disassemble valve and replace Seat O-Ring.
	B. Damaged Metal Seat	B. Disassemble valve and lap Metal Disc and/or Nozzle.
	C. Metal Seat is not lapped in properly to Disc Holder	C. Disassemble Disc and Disc Holder to lap two together properly
	D. Seat too wide	D. Recheck Tables 3 and 4
Main Valve leaks under the Nozzle Seat	A. Damaged Nozzle O-Ring	A. Disassemble Main Valve and replace damaged Nozzle O-Ring.
Pilot Valve is not opening at set pressure and Main Valve will not open	A. Wrong set pressure	A. Readjust the set pressure of the valve.
Main Valve does not close upon start up. P2 chamber does not load with system pressure.	A. Start-up procedures pressurize the valve too rapidly.	A. Slowly increase the inlet pressure.
	B. Sensing Tube is installed upside down.	B. Re-install Sensing Tube correctly.
	C. Closed Filter	C. Clear or replace Filter.
	D. Main Valve Piston is not resting on nozzle.	D. Push the Main Valve Piston down to nozzle through the compression fitting on top of the Cover Plate.
Leakage through the Pilot Valve	A. Operating pressure too high	A. Adjust operating pressure
	B. O-Ring or Spring Seal degradation	B. Disassemble and replace O-Ring or Spring Seals
Main Valve opens and allows the discharge media to flow back into the pressure vessel	A. Back pressure is greater than set pressure and forces the Main Disc up, and the media flows backward into the vessel.	A. Install Backflow Preventer
	B. Discharging into a closed container or not enough capacity in the discharge system.	B. Install Backflow Preventer.

XXII. 2900 Series POSRV Options

A. Backflow Preventer

When the pilot operated safety relief valve is not vented directly to atmosphere, it is possible to build up backpressure in the discharge line. This is typical in situations where several valves manifold into a common discharge header. Should the discharge line pressure exceed the valve inlet pressure, it could cause the disc to lift and allow reverse flow through the main valve. This situation can be eliminated through the use of the Backflow Preventer.

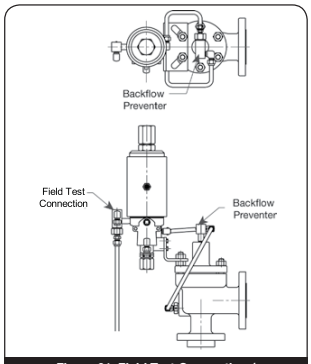

Figure 61: Field Test Connection / Backflow Preventer Option

Note: Item #23 in Figures 3, 4 and 5 is the same Field Test Connection shown here in Figure 61. Shuttle Base (23c) can be square or octagon bar stock.

A.1 Disassembly Instructions

1. Remove Shuttle Plug from Shuttle Base by unscrewing counterclockwise.
2. Remove Shuttle Ball, Tube Filter, and O-Rings and discard.

A.2 Cleaning

1. If required, clean parts to remove all rust, burrs, scale, organic matter, and loose particles. Parts are to be free of any oil or grease except for lubrication as specified in this instruction.
2. Cleaning agents used shall be such that effective cleaning is assured without injuring the surface finishes or material properties of the part.
3. Acceptable cleaning agents include demineralized water, nonphosphate detergent, acetone, and isopropyl alcohol. Parts must be blown dry or wiped dry after cleaning.
4. If you are using cleaning solvents, take precautions to protect yourself from potential danger from breathing fumes, chemical burns, or explosion. See the solvent's Material Safety Data Sheet for safe handling recommendations and equipment.
5. It is not recommended to "sand blast" internal parts as it can reduce the dimensions of the parts.

A.3 Parts Inspection

1. **Shuttle Base:** Galling or excessive wear on the threads. Check for any corrosion or pitting.
2. **Shuttle Plug:** Galling or excessive wear on the threads. Check for any corrosion or pitting.

A.4 Reassembly Instructions

Lubricate O-Rings with silicone grease Dresser P/N SP505.

1. Assembly of Field Test Connection / Backflow Preventer Assembly.
   a. Insert one of the Small O-Rings into the Shuttle Base counter bore.
   b. Insert the Tube Filter into the Shuttle Base.
   c. Insert Shuttle Ball inside of Tube Filter.
   d. Insert the other Small O-Ring into the Shuttle Plug counter bore. Install Larger O-Ring into groove located on OD of Shuttle Plug.
   e. Thread Shuttle Plug into Shuttle Base, wrench tighten.

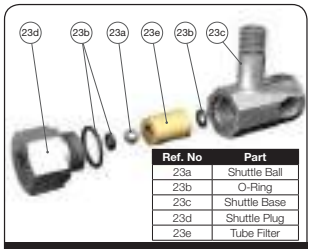

Ref. No	Part
23a	Shuttle Ball
23b	O-Ring
23c	Shuttle Base
23d	Shuttle Plug
23e	Tube Filter

Figure 62: Backflow Preventer Option

XXII. 2900 Series POSRV Options (Contd.)

B. Dirty Service Option

Severe dirty service, precipitation and viscous fluid problems can be solved using the dirty service option offered on the 3900 POSRV. A dirty service option can be added to the standard pilot valve. The kit contains a 316 SS chamber, an isolation seal and an extended pilot piston. The module is positioned at the top of the pilot valve body and below the pilot valve bonnet. Crucial valve components such as the modulator, dome assembly, vent, and inlet seals never come in contact with the dirty system media. The process media pressure still controls the set pressure and blowdown of the POSRV.

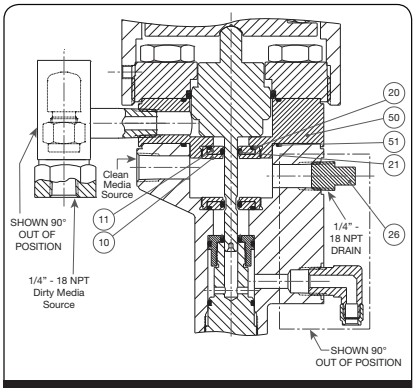

Figure 63: 39PV07/37 Dirty Service

Part No.	Nomenclature
1	Main Base
2	Adjuster Cap
3	Adjuster Top
10	Insert Top
11	Insert Bottom
12	Main Piston
14	Cap Screw (Top Plate)
16	O-Ring (Adjuster Top)
17	O-Ring (Insert)
18	O-Ring (Top Plate)
20	Spring Seal (Main Piston)
21	Spring Seal (Adjuster Top)
22	Spring Seal (Insert)
26	Pipe Plug (Pilot Valve)
29	Piston Retainer Nut
30	Set Screw (Piston)
31	Vent Seal (Adaptor)
32	Spring Seal (Vent Seal Adaptor)
50	Dirty Insert
51	Omni Plug
52	Breather Filer Vent

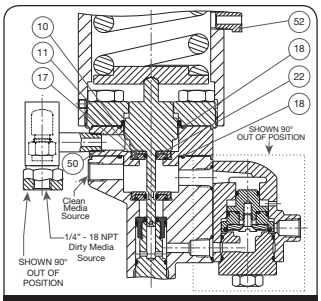

Figure 64: 39MV07 Dirty Service

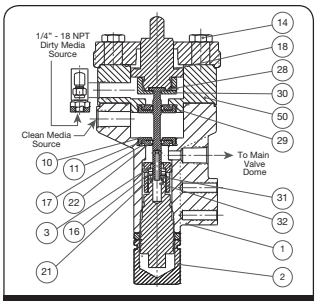

Figure 65: 39MV22/72 Dirty service

XXII. 2900 Series POSRV Options (Contd.)

B. Dirty Service Option (Contd.)

B.1 Disassembly Instructions

1. The Dirty Service Option consists of:
   1 – Insert Assembly
   1 – Dirty Service Insert
   1 – O-Ring (Dirty Service Insert)
   1 – Regulator
2. The Insert Assembly consists of:
   1 – Insert Top
   1 – Insert Bottom
   1 – Spring Seal (Insert)
   1 – O-Ring (Insert)
3. Remove Dirty Service Insert and discard O-Ring (Dirty Service Insert).
4. Remove Insert Assembly from the Dirty Service Insert with tool #4995401. Remove and discard the O-Ring (Insert) on the bottom of the Insert Assembly. Disassemble Insert Assembly by removing the Insert Bottom from the Insert Top. Discard Spring Seal (Insert).
5. Return to Disassembly Instructions for pilot (Section XVII).

B.2 Cleaning

1. Clean parts to remove all rust, burrs, scale, organic matter, and loose particles. Parts are to be free of any oil or grease except for lubrication as specified in this instruction.
2. Cleaning agents used shall be such that effective cleaning is assured without injuring the surface finishes or material properties of the part.
3. Acceptable cleaning agents include demineralized water, nonphosphate detergent, acetone, and isopropyl alcohol. Parts must be blown dry or wiped dry after cleaning.
4. If you are using cleaning solvents, take precautions to protect yourself from potential danger from breathing fumes, chemical burns, or explosion. See the solvent's Material Safety Data Sheet for safe handling recommendations and equipment.
5. Do not "sand blast" internal parts as it can reduce the dimensions of the parts.

B.3 Parts Inspection

1. **Insert Top:** Galling or excessive wear on the inside diameter that guides the Main Piston. Check for any corrosion or pitting. Also, check for galling of threads.
2. **Insert Bottom:** Galling or excessive wear on the inside diameter that guides the Main Piston. Check for any corrosion or pitting.

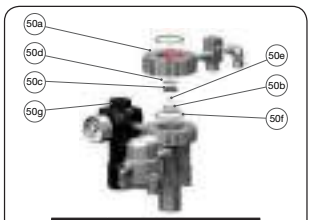

Ref. No.	Part
50a	Dirty Service Insert
50b	Insert Top
50c	Insert Bottom
50d	O-Ring (Insert)
50e	Spring Seal (Insert)
50f	O-Ring (Dirty Service Insert)
50g	Regulator

Figure 66: Dirty Service Parts

B.4 Reassembly Instructions

Making the Insert Assembly for Dirty Service Option:

1. Press Spring Seal (Insert) into groove on the Insert Bottom. Make sure spring is facing upwards.
2. Install Insert Top over Insert Bottom with the seal side going in first.
3. Lightly lubricate O-Ring groove now formed by the two insert parts. This lubrication is used to hold the O-Ring (Insert) in place when it is being inserted into Dirty Service Insert.
4. Place O-Ring (Insert) into groove.
5. The Insert Assembly is threaded into the Dirty Service Insert. Tighten assembly wrench tight. Make sure milled slot is facing up.
6. Install O-Ring (Top-Plate) onto groove in Pilot Base.
7. Install Dirty Service Insert Assembly on top of Pilot Base with inlet port facing opposite of vent port on Pilot Base. Then install Main Piston / Top Plate Assembly onto Base/Dirty Insert by inserting small diameter end of Main Piston through Insert Assemblies.

XXII. 2900 Pilot Valve Options (Contd.)

C. Dual Pilots

A dual pilot arrangement (Figure 67) is available for applications in which the pilot valve soft goods require monitoring and/or maintenance more often than the main valve. In this installation, the pilot valves may be alternated for maintenance, without bringing the system down.

Figure 67: Dual Pilots

ATTENTION!

When servicing dual pilots, procedures need to be in place to perform a tag out / lock out of pilots under pressure if they are in service.

D. Field Test Connection

A field test connection is standard on all pilot valve types. This allows the stroking of the valve with an auxiliary media, e.g. air or nitrogen. An internal check valve is present in the field test connection isolating the inlet media from the test media and at the same time, allowing the valve to open normally in the event of a system over pressurization during a field test. The test port connection is a .375" (9.53 mm) tube fitting equipped with a bug screen.

For all applications on air, water over 140°F (60 °C), or steam service, ASME Section VIII - Division 1 requires each pressure relief valve to have a lifting device such as a field test connection or a means of connecting or applying pressure to the pilot to verify that the moving parts essential to good operation are free to move. (Reference UG 136(a)(3)). The lifting lever or field test connection may be omitted under Code Case 2203. All orders for pressure relief valves without levers or field test connection for steam, air and water over 140°F (60°C) must state specifically that the valves are being purchased per Code Case 2203. The purchaser is responsible for obtaining jurisdictional authorization for use of Code Case 2203.

E. Filter (Single, Dual, or High Capacity)

Figure 68: Sensing Line Filter

Filter options are available for dirty applications. These filters are installed in the pilot inlet sensing line. For the 39PV and 39MV, an optional sensing line filter is available (Figure 68). This filter has a 316 stainless steel body, Teflon® seals, and a 40-50 micron stainless steel filter element. Other high capacity filter options (Figure 69) include:

1. A carbon steel filter body with a 35 micron stainless steel element; and
2. An entirely stainless steel filter arrangement. These filters may be equipped with a manually operated needle valve which allows for purging the filtered material while the valve is in operation. All filter elements are stainless steel, and all filters, including carbon steel, conform to NACE Standard MR0103 and MR0175. A dual filter arrangement (Figure 70)

XXII. 2900 Pilot Valve Options (Contd.)

Figure 69: High Capacity Filter

is available for applications in which the customer is unsure of the filter maintenance requirements. In these cases, a preventive maintenance program may be developed by monitoring the filters, without taking the valve off line.

Figure 70: Dual Filter

ATTENTION!

When servicing dual filters, procedures need to be in place to perform a tag out / lock out of pilots under pressure if they are in service.

F. Gag

A manual method of locking a pilot operated relief valve in the closed position for system hydrostatic test. 39MV72 limited to 4800 psig (330.9 barg) with gag option (Figure 71).

Figure 71: Gag

G. Heat Exchanger

This allows the temperature range for the 3900 POSRV with metal seats to be extended to -320°F to 650°F (-195.5°C to 343.3°C). Not available above 3750 psig (258.5 barg). When the heat exchanger is selected, the POSRV shall be piped so that the media enters the heat exchanger first to condition the media's temperature. Option(s) such

XXII. 2900 Pilot Valve Options (Contd.)

Figure 72: Heat Exchanger - Hot Service

as line filter, canister filter, 5-way manifold valve, pressure differential switch, pressure spike snubber, etc. shall be piped downstream of the heat exchanger (Figures 72 & 73).

Figure 73: Heat Exchanger - Cold Service

H. Lifting Lever

This is an external, physical means of allowing the pilot valve to relieve dome pressure so that the main valve can open.

I. Manual, Electrical, or Pneumatic Blowdown Valve

(Figures 74 & 75)

Figure 74: Manual Blowdown Valve

Figure 75: Electrical Blowdown Valve

XXII. 2900 Pilot Valve Options (Contd.)

An optional manual blowdown valve is available for relieving the pilot operated safety relief valve. Consult factory for applications requiring a pneumatic or electrical solenoid blowdown valve which may be connected to a distant location, such as an operator station, for remote actuation. The blowdown valve is ported directly to the main dome area, so that the media in the dome is vented when the blowdown valve is actuated, thus allowing the main valve to open.

J. Pilot Valve Tester

The pilot valve test indicator (Figure 76) is available for the modulating and pop action pilot valves. The valve test indicator measures the set pressure of the pilot, while maintaining pressure on the main valve dome area; thereby, allowing only the pilot to actuate.

Figure 76: Pilot Valve Tester

K. Pressure Differential Switch

Electrical: A pressure differential switch (Figure 77) is available which may be wired to an operator station or some other remote location. The switch will provide a signal that indicates when the main valve is opening. The standard pressure differential switch is a single pole, double throw, rated at 5 amps and 30 volts DC with a NEMA 4 enclosure. (For other configurations, consult the factory.)

Pneumatic: For applications that do not permit an electrical differential switch, an option is available to provide pneumatic signal to indicate when the main valve opens.

Figure 77: Pressure Differential Switch

L. Pressure Spike Snubber

Dresser Consolidated® recommends the use of a pressure spike snubber (Figure 78) for all applications which may have high frequency pressure spikes. The pressure spike snubber is designed to dampen the pressure spikes which could cause unnecessary parts wear or premature valve opening.

Figure 78: Pressure Spike Snubber

XXII. 2900 Pilot Valve Options (Contd.)

M. Remote Pilot Mounting

The 39PV and 39MV pilots can be mounted separately from the main valve. Remote pilot mounting will allow heating or cooling the pilot in case ambient conditions are outside the scope of the pilot. It will also enable the user to group several pilots together for control of ambient conditions in a smaller space. In addition, this promotes easier maintenance.

N. Remote Sensing

The pilot valve inlet may be piped to a location remote from the main valve. In this application, the customer may pipe the inlet sensing line to some location other than where the main valve is located and where the pressure will be relieved (for tubing size and maximum length, consult factory for recommendations).

O. Sensing Ring

(Figure 79)

An option which allows the pilot valve inlet to be piped to a location just below the inlet flange of the main valve base.

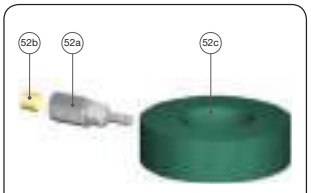

Ref. No.	Part
52a	Sensing Tube
52b	Plug Filter
52c	Sensing Ring

Figure 79: Sensing Ring

XXIII. Maintenance Tools and Supplies

A. Adjuster Top Seal Insertion Tool

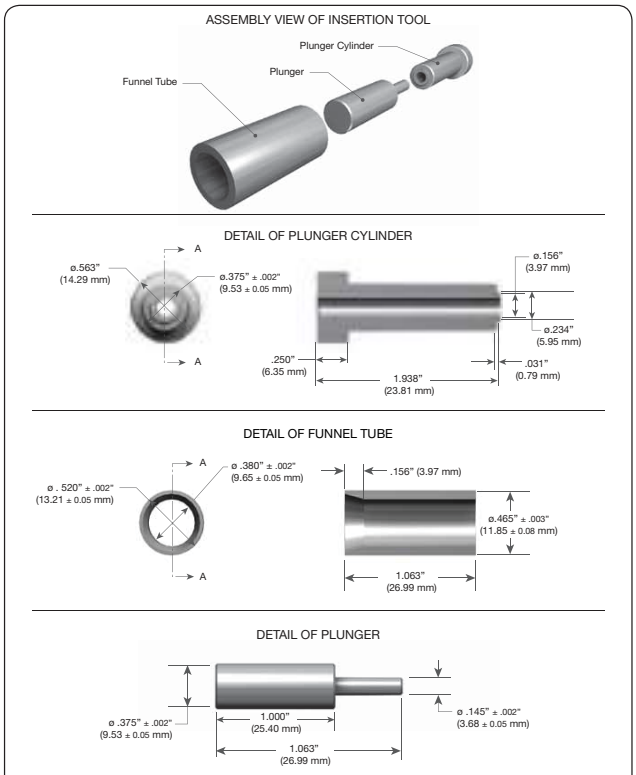

Figure 80: Adjuster Top Seal Insertion Tool

XXIII. Maintenance Tools and Supplies (Contd.)

B. Insert Installation Tool

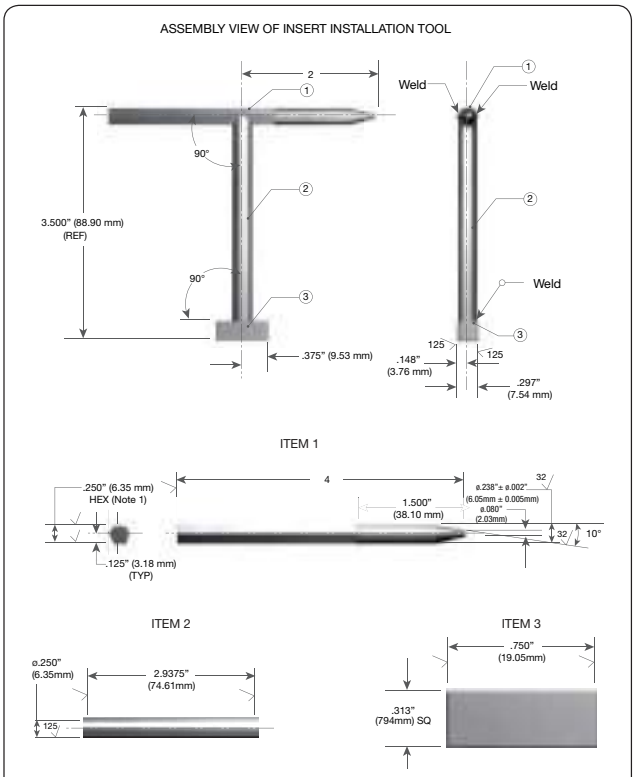

Figure 81: Insert Installation Tool

XXIII. Maintenance Tools and Supplies (Contd.)

C. Lapping Tools

The following tools are required for proper maintenance of Pilot Operated Safety Relief Valve metal seats, and may be purchased from Dresser, Inc.

1. Ring Lap: The ring lap is used for lapping the disc seat and finish lapping of the nozzle seat.
2. Lapping Plate: The lapping plate is used for reconditioning the ring lap. It may also be used for lapping the disc. One 11" (279.40 mm) diameter plate is required for the entire line of valves (Part No. 0439004).
3. Lapping Compound: Lapping compound is used as a cutting medium when lapping the valve seats, as specified in Table 18.

Table 18: Lapping Compound Types

Brand	Grade	Grit	Lapping Function	Size Container	Part No.
Clover	1A	320	General	4 oz	199-3
Clover	3A	500	Finishing	4 oz	199-4
Kwik-Ak-Shun	-	1000	Polishing	1 lb	199-11
				2 lb	199-12

4. Drift Pins: Two drift pins are required for the removal of the disc from the disc holder. Refer Figure 82 and Table 19 for Drift Pin specifications.
5. Nozzle Lap: The nozzle lap is used for lapping the nozzle seat and has one flat side and one side with a 5° angle. This lap guides in the bore of the nozzle; therefore, a different size lap is required for each valve orifice (Table 20).
6. Lifting Tools: Lifting tools are used for the removal of upper internal parts of larger valves, as specified in Table 21.

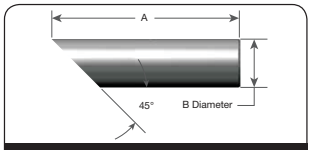

Figure 82: Drift Pin Specifications

Table 19: Drift Pin Types

Orifice	A		B		Part No.
	in.	mm	in.	mm	
D, E, F, G, H, J, K	1.75	44.5	.219	5.55	430401
L, M, N, P	2.50	63.5	.375	9.53	430402
Q, R	3.00	76.2	.625	15.88	430403
T, U	3.50	88.9	.875	22.23	430404

Table 20: Nozzle Lap Dimensions

Orifice	Nozzle Bore				Nozzle Lap	Nozzle Lap Handle	Ring Lap[1]
	min.		max.				
	in	mm	in	mm			
D	.404	10.26	.409	10.39	4451501	544603	1672805
E	.539	13.69	.544	13.82	4451502	544601	1672805
F	.674	17.12	.679	17.25	4451503	544601	1672805
G	.863	21.92	.868	22.05	4451504	544601	1672805
H	1.078	27.38	1.083	27.51	4451505	544601	1672805
J	1.380	35.05	1.385	35.18	4451506	544601	1672805
K	1.650	41.91	1.655	42.04	4451507	544601	1672807
M	2.309	58.65	2.314	58.78	4451602	544601	1672809
N	2.535	64.39	2.540	64.52	4451603	544601	1672809
P	3.073	78.05	3.078	78.18	4451604	544602	1672810
Q	4.045	102.74	4.050	102.87	4451605	544602	1672812
R	4.867	123.62	4.872	123.75	4451606	544602	1672812
T	6.037	153.34	6.043	153.49	4451607	544602	1672813
U	6.685	169.80	6.891	175.03	None	None	1672813
V	8.000	203.20	8.005	203.33	None	None	6267201
W	10.029	254.74	10.034	254.86	None	None	4875201

Note 1: Ring Laps: One set of three (3) ring laps is recommended for each orifice to assure ample flat laps are available at all times.

XXIII. Maintenance Tools and Supplies (Contd.)

Table 21: Wrench Types

Valve Orifice	Description of Wrench				Pin Spanner Wrench No.	Valve Orifice	Description of Wrench				Pin Spanner Wrench No.
	Wrench Radius		Pin				Wrench Radius		Pin		
	in	mm	in	mm			in	mm	in	mm	
F	.750	19.05	.219	5.56	4451801	N	1.875	47.63	.359	9.13	4451607
G	.750	19.05	.219	5.56	4451801	P	1.875	47.63	.359	9.13	4451607
H	.875	22.23	.266	6.75	4451802	Q	2.500	63.50	.438	11.11	4451808
J	1.125	28.58	.266	6.75	4451803	R	3.000	76.20	.500	12.70	4451809
K	1.250	31.75	.281	7.14	4451804	T	3.750	95.25	.500	12.70	4451810
L	1.375	34.93	.297	7.54	4451805	U	3.750	95.25	.500	12.70	4451810
M	1.675	42.55	.328	8.33	4451806	-	-	-	-	-	-

D. Disc Holder and Guide Removal and Assembly Tool

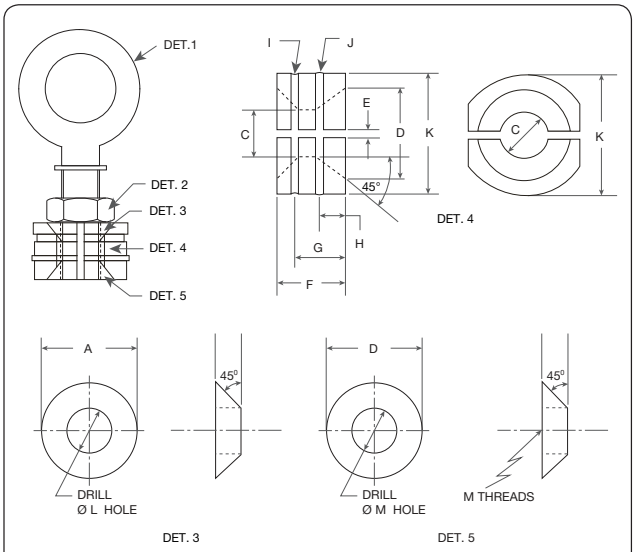

Figure 83: Disc Holder and Guide Removal and Assembly Tool

XXIII. Maintenance Tools and Supplies (Contd.)

Table 22: Disassembly Tool Dimensions

Orifices Sizes	"Eye Bolt (Notes)"	"Jam Nut (Notes)"	Ø A		Ø B		Ø C		Ø D		Ø E		Ø F		Ø G	
			in.	mm	in.	mm	in.	mm	in.	mm	in.	mm	in.	mm	in.	mm
D,E,F,G,H,J	#1	#5	.703	17.86	.250	6.35	.437	11.10	.730	18.54	.094	2.39	.750	19.05	.406	10.31
K,L	#2	#6	.828	21.03	.250	6.35	.437	11.10	.847	21.51	.125	3.18	.750	19.05	.438	11.13
M,N	#3	#7	.828	21.03	.250	6.35	.437	11.10	.828	21.03	.125	3.18	.750	19.05	.438	11.13
P, Q, R, T	#4	#8	1.375	34.93	.376	9.55	.750	19.05	1.375	34.93	.125	3.18	1.000	25.40	.750	19.05

Table 22: Disassembly Tool Dimensions (Contd.)

Orifices Sizes	Ø H		I Radius		J Radius		Ø K		Ø L		Ø M Drill Size		M NC Tap Size	
	in.	mm	in.	mm	in.	mm	in.	mm	in.	mm	in.	mm	in.	mm
D,E,F,G,H,J	.156	3.96	.047	1.19	.034	0.86	.798	20.27	.375	9.53	Note 7		.250 - 20 thd.	6.35 - 20 thd.
K,L	.188	4.78	.062	1.57	.040	1.02	.927	23.55	.375	9.53	.313	7.94	.375 - 16 thd.	9.53 - 16 thd.
M,N	.188	4.78	.062	1.57	.047	1.19	1.126	28.60	.500	12.70	.313	7.94	.375 - 16 thd.	9.53 - 16 thd.
P, Q, R, T	.375	9.53	.094	2.39	.055	1.40	1.834	46.58	.750	19.05	.531	13.49	.625 - 11 thd.	15.88 - 11 thd.

Notes:

1) Use a Standard Eye-Bolt – .250" (6.35 mm) - 20 thd. x 3.5" (88.90 mm) Long
2) Use a Standard Eye-Bolt – .375" (9.53 mm) - 16 thd. x 4.5" (114.30 mm) Long
3) Use a Standard Eye-Bolt – .375" (9.53 mm)-16 thd. x 4.5" (114.30 mm) Long
4) Use a Standard Eye-Bolt – .625" (15.88 mm)-11 thd. x 4.5" (114.30 mm) Long
5) Use a Standard Nut – .250" (6.35 mm) - 20 thd.
6) Use a Standard Nut – .375" (9.53 mm) - 16 thd.
7) Use a Standard Nut – .375" (9.53 mm) - 16 thd.
8) Use a Standard Nut – .625" (15.88 mm) - 11 thd.

Additional: Use an appropriate sized O-Ring in groove "I", to hold the parts together.

XXIV. Replacement Parts Planning

A. Basic Guidelines

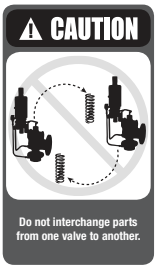

The following guidelines should be of assistance in developing a meaningful replacement parts plan.

A. The total number of valves in service should be classified by size, type and temperature class.

B. The parts inventory should be classified by the tendency to require replacement.
Class I – Most frequently replaced
Class II – Less frequently replaced but critical in an emergency

C. Parts for the valve types covered by this manual are classified on Tables 23. "Qty. parts" is the number of parts or sets which is recommended to achieve a desired need-probability, as it relates to the total number of valves in service by size and type. For example, a "Qty. parts" of 1 for "Valves in service" of 5 means that 1 part should be stocked for each 5 valves of the same type and size in service.

D. When ordering replacement parts, please specify in accordance with applicable nomenclature (see Figures 1 to 7). Be sure to state the size, type and serial number of the valve for which parts are required. When ordering pilot parts please state specific pilot type (39PV07, 37 etc.)

For ease of maintenance O-Ring kits are available for each main valve and pilot type. A stock of these kits should be kept on hand for maximum operating efficiency. See Tables 24, 25 and 26 in Section XXVI.

B. Identification and Ordering Essentials

Identification and Ordering Essentials When ordering service parts, please furnish the following information to ensure receiving the correct replacement parts.

Identify valve by the following nameplate data (Refer Figures 84, 85 and 86):

A. Size

B. Type

C. Pressure/Temperature Class Rating

D. Serial Numbers from both main valve and pilot valve

Example:

Main Valve: 2910R-00-1-CC-MS-B-RF-GS-RS, TL12345-M

Pilot Valve: 39PV07-2-CC-B-GS-60, TL12346-P

How to verify Materials of O-Rings and Seals:

Kit coding indicates O-Ring and seals material.

Examples:

M0RK-70**T**006

PSGK - 31**B**

T	Teflon
B	Buna N
E	Ethylene / Propylene
V	Viton
K	Kalrez

XXIV. Replacement Parts Planning (Contd.)

C. Positive Identification of Main Valve and Pilot Valve Combinations

POSRV's shipped direct from the factory to the end-user probably have main valves and pilot valves with identical serial numbers (S/N's). Those shipped unconnected to the Dresser Green Tag network may have main valves and pilot valves with different S/N's. During service and repair, the following inspection steps will ensure the proper match of main valves to pilot valves.

1 Record main valve and pilot valve S/N's of original POSRV's in plant records.

2. Inspect S/N's for agreement with Step 1, after any disassembly involving removal of pilot valve from main valve.

3. Make sure the set pressures of the main valve and pilot valve are identical.

4. Check O-Ring and Seals Kit material code to ensure they are the same for main valve and pilot valve. Any discrepancies should be promptly report to the appropriate plant authority.

Specify parts required by:

1. Part Name (See Nomenclature, Figures 1 - 7)
2. Part Number (if known)
3. Quantity

Contact Parts Marketing: (318) 640-2250.

In addition, the main valve serial number is stamped on the top edge of the outlet flange. Be sure to include the one or two letters preceding the figures in the serial number. Typical valve nameplates are shown in Figures 84, 85 and 86.

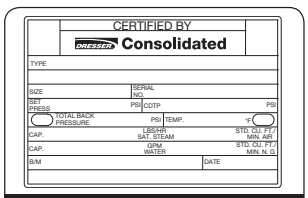

Figure 84: Nameplates for Main Valve

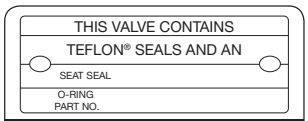

Figure 85: Nameplates for Main Valve

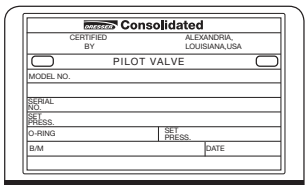

Figure 86: Nameplate for Pilot Valve

XXV. Genuine Dresser Parts

The next time replacement parts are needed, keep these points in mind:

- Dresser Consolidated® designed the parts
- Dresser Consolidated® guarantees the parts
- Consolidated valve products have been in use since 1879
- Dresser Consolidated® has worldwide service
- Dresser Consolidated® has fast response availability for parts

XXVI. Recommended Spare Parts

Table 23: Recommended Spare Parts for 2900 Series POSRV[1]

	Class	Part Name	
Class I Parts should be stocked at the rate of one (1) per valve. Maintaining this level of spare parts will provide replacement parts for 70% of possible maintenance requirements	I	Pilot Valve	O-Ring Kit Plug Filter
		Main Valve	O-Ring Kit / Gasket Kit Metal Disc Nozzle Bellows (if required) Disc Retainer
Class II parts should be stocked at the rate of one (1) part per each five (5) valves in the population. Class II parts will provide replacement parts for an additional 15% of possible maintenance requirements.	II	Pilot Valve	Main Piston Tube Fittings (2) Modulator Stop O-Ring Retainer Backflow Preventer Seal Kit Piston Nose
		Main Valve	Disc Holder O-Ring Retainer (if required) Guide Main Valve Piston 1 set of Nuts and Studs Tube Fittings (2)

Note 1: A combination of Class I and II parts will satisfy maintenance requirements 85% of the time.

XXVI. Recommended Spare Parts (Contd)

Table 24: Main Valve O-Ring Kits			
Material: Buna-N 90 Durometer (Nitrile 90)			
Orifice	Valve Type	Part No.	
		Conventional Valves (-00)	Bellows Valves (-30)
D, E, F	2905, 06, 10, 20, 22	M0RK29001B008	M0RK29027B008
D, E, F	2912	M0RK29016B008	M0RK29042B008
D, E, F	2914,16,24,26	M0RK29020B008	M0RK29046B008
D, E, F	2918, 28	M0RK29025B008	M0RK29051B008
G	2905, 06, 10, 20, 22	M0RK29002B008	M0RK29028B008
G	2912	M0RK29017B008	M0RK29043B008
G	2914,16,18, 24,26, 28	M0RK29021B008	M0RK29047B008
H	2905, 06, 10, 12, 20, 22	M0RK29003B008	M0RK29029B008
H	2914,16, 24,26	M0RK29022B008	M0RK29048B008
J	22905,06,10,20,22	M0RK29004B008	M0RK29030B008
J	2912,14,16,24,26	M0RK29018B008	M0RK29044B008
K	2905,06,10,12,20,22,24	M0RK29005B008	M0RK29031B008
K	2914,16	M0RK29023B008	M0RK29049B008
K	2926,28	M0RK29026B008	M0RK29052B008
L	2905,06,10,12,20,22	M0RK29006B008	M0RK29032B008
L	2914,16,24,26	M0RK29024B008	M0RK29050B008
M	2905,06,10,12,14,20,22,24	M0RK29007B008	M0RK29033B008
N	2905,06,10,12,14,20,22,24	M0RK29008B008	M0RK29034B008
P	2905,06,10,20	M0RK29009B008	M0RK29035B008
P	2912,14	M0RK29019B008	M0RK29045B008
Q	2905,06,10,12,20,22	M0RK29010B008	M0RK29036B008
R	2905,06,10,12,20,22	M0RK29011B008	M0RK29037B008
T	2905,06,10,12,20,22	M0RK29012B008	M0RK29038B008

XXVI. Recommended Spare Parts (Contd.)

Table 24: Main Valve O-Ring Kits (Contd.)			
Material: Buna-N 70 Durometer (Nitrile 70)			
Orifice	Valve Type	Part No.	
		Conventional Valves (-00)	Bellows Valves (-30)
D, E, F	2905, 06, 10, 20, 22	M0RK29001B018	M0RK29027B018
D, E, F	2912	M0RK29016B018	M0RK29042B018
D, E, F	2914,16,24,26	M0RK29020B018	M0RK29046B018
D, E, F	2918, 28	M0RK29025B018	M0RK29051B018
G	2905, 06, 10, 20, 22	M0RK29002B018	M0RK29028B018
G	2912	M0RK29017B018	M0RK29043B018
G	2914,16,18, 24,26, 28	M0RK29021B018	M0RK29047B018
H	2905, 06, 10, 12, 20, 22	M0RK29003B018	M0RK29029B018
H	2914,16, 24,26	M0RK29022B018	M0RK29048B018
J	22905,06,10,20,22	M0RK29004B018	M0RK29030B018
J	2912,14,16,24,26	M0RK29018B018	M0RK29044B018
K	2905,06,10,12,20,22,24	M0RK29005B018	M0RK29031B018
K	2914,16	M0RK29023B018	M0RK29049B018
K	2926,28	M0RK29026B018	M0RK29052B018
L	2905,06,10,12,20,22	M0RK29006B018	M0RK29032B018
L	2914,16,24,26	M0RK29024B018	M0RK29050B018
M	2905,06,10,12,14,20,22,24	M0RK29007B018	M0RK29033B018
N	2905,06,10,12,14,20,22,24	M0RK29008B018	M0RK29034B018
P	2905,06,10,20	M0RK29009B018	M0RK29035B018
P	2912,14	M0RK29019B018	M0RK29045B018
Q	2905,06,10,12,20,22	M0RK29010B018	M0RK29036B018
R	2905,06,10,12,20,22	M0RK29011B018	M0RK29037B018
T	2905,06,10,12,20,22	M0RK29012B018	M0RK29038B018

XXVI. Recommended Spare Parts (Contd)

Table 24: Main Valve O-Ring Kits (Contd.)			
Material: Teflon®			
Orifice	Valve Type	Part No.	
		Conventional Valves (-00)	Bellows Valves (-30)
D, E, F	2905, 06, 10, 20, 22	M0RK29001T006	M0RK29027T006
D, E, F	2912	M0RK29016T006	M0RK29042T006
D, E, F	2914,16,24,26	M0RK29020T006	M0RK29046T006
D, E, F	2918, 28	M0RK29025T006	M0RK29051T006
G	2905, 06, 10, 20, 22	M0RK29002T006	M0RK29028T006
G	2912	M0RK29017T006	M0RK29043T006
G	2914,16,18, 24,26, 28	M0RK29021T006	M0RK29047T006
H	2905, 06, 10, 12, 20, 22	M0RK29003T006	M0RK29029T006
H	2914,16, 24,26	M0RK29022T006	M0RK29048T006
J	22905,06,10,20,22	M0RK29004T006	M0RK29030T006
J	2912,14,16,24,26	M0RK29018T006	M0RK29044T006
K	2905,06,10,12,20,22,24	M0RK29005T006	M0RK29031T006
K	2914,16	M0RK29023T006	M0RK29049T006
K	2926,28	M0RK29026T006	M0RK29052T006
L	2905,06,10,12,20,22	M0RK29006T006	M0RK29032T006
L	2914,16,24,26	M0RK29024T006	M0RK29050T006
M	2905,06,10,12,14,20,22,24	M0RK29007T006	M0RK29033T006
N	2905,06,10,12,14,20,22,24	M0RK29008T006	M0RK29034T006
P	2905,06,10,20	M0RK29009T006	M0RK29035T006
P	2912,14	M0RK29019T006	M0RK29045T006
Q	2905,06,10,12,20,22	M0RK29010T006	M0RK29036T006
R	2905,06,10,12,20,22	M0RK29011T006	M0RK29037T006
T	2905,06,10,12,20,22	M0RK29012T006	M0RK29038T006

XXVI. Recommended Spare Parts (Contd.)

Table 24: Main Valve O-Ring Kits (Contd.)			
Material: Ethylene Propylene (EPR EPDM 90 Durometer)			
Orifice	Valve Type	Part No.	
		Conventional Valves (-00)	Bellows Valves (-30)
D, E, F	2905, 06, 10, 20, 22	M0RK29001E002	M0RK29027E002
D, E, F	2912	M0RK29016E002	M0RK29042E002
D, E, F	2914,16,24,26	M0RK29020E002	M0RK29046E002
D, E, F	2918, 28	M0RK29025E002	M0RK29051E002
G	2905, 06, 10, 20, 22	M0RK29002E002	M0RK29028E002
G	2912	M0RK29017E002	M0RK29043E002
G	2914,16,18, 24,26, 28	M0RK29021E002	M0RK29047E002
H	2905, 06, 10, 12, 20, 22	M0RK29003E002	M0RK29029E002
H	2914,16, 24,26	M0RK29022E002	M0RK29048E002
J	22905,06,10,20,22	M0RK29004E002	M0RK29030E002
J	2912,14,16,24,26	M0RK29018E002	M0RK29044E002
K	2905,06,10,12,20,22,24	M0RK29005E002	M0RK29031E002
K	2914,16	M0RK29023E002	M0RK29049E002
K	2926,28	M0RK29026E002	M0RK29052E002
L	2905,06,10,12,20,22	M0RK29006E002	M0RK29032E002
L	2914,16,24,26	M0RK29024E002	M0RK29050E002
M	2905,06,10,12,14,20,22,24	M0RK29007E002	M0RK29033E002
N	2905,06,10,12,14,20,22,24	M0RK29008E002	M0RK29034E002
P	2905,06,10,20	M0RK29009E002	M0RK29035E002
P	2912,14	M0RK29019E002	M0RK29045E002
Q	2905,06,10,12,20,22	M0RK29010E002	M0RK29036E002
R	2905,06,10,12,20,22	M0RK29011E002	M0RK29037E002
T	2905,06,10,12,20,22	M0RK29012E002	M0RK29038E002

XXVI. Recommended Spare Parts (Contd.)

Table 24: Main Valve O-Ring Kits (Contd.)			
Material: Ethylene Propylene (EPR 70 Durometer)			
Orifice	Valve Type	Part No.	
		Conventional Valves (-00)	Bellows Valves (-30)
D, E, F	2905, 06, 10, 20, 22	M0RK29001E019	M0RK29027E019
D, E, F	2912	M0RK29016E019	M0RK29042E019
D, E, F	2914,16,24,26	M0RK29020E019	M0RK29046E019
D, E, F	2918, 28	M0RK29025E019	M0RK29051E019
G	2905, 06, 10, 20, 22	M0RK29002E019	M0RK29028E019
G	2912	M0RK29017E019	M0RK29043E019
G	2914,16,18, 24,26, 28	M0RK29021E019	M0RK29047E019
H	2905, 06, 10, 12, 20, 22	M0RK29003E019	M0RK29029E019
H	2914,16, 24,26	M0RK29022E019	M0RK29048E019
J	22905,06,10,20,22	M0RK29004E019	M0RK29030E019
J	2912,14,16,24,26	M0RK29018E019	M0RK29044E019
K	2905,06,10,12,20,22,24	M0RK29005E019	M0RK29031E019
K	2914,16	M0RK29023E019	M0RK29049E019
K	2926,28	M0RK29026E019	M0RK29052E019
L	2905,06,10,12,20,22	M0RK29006E019	M0RK29032E019
L	2914,16,24,26	M0RK29024E019	M0RK29050E019
M	2905,06,10,12,14,20,22,24	M0RK29007E019	M0RK29033E019
N	2905,06,10,12,14,20,22,24	M0RK29008E019	M0RK29034E019
P	2905,06,10,20	M0RK29009E019	M0RK29035E019
P	2912,14	M0RK29019E019	M0RK29045E019
Q	2905,06,10,12,20,22	M0RK29010E019	M0RK29036E019
R	2905,06,10,12,20,22	M0RK29011E019	M0RK29037E019
T	2905,06,10,12,20,22	M0RK29012E019	M0RK29038E019

XXVI. Recommended Spare Parts (Contd.)

Table 24: Main Valve O-Ring Kits (Contd.)			
Material: Viton® Fluorocarbon (90 Durometer)			
Orifice	Valve Type	Part No.	
		Conventional Valves (-00)	Bellows Valves (-30)
D, E, F	2905, 06, 10, 20, 22	M0RK29001V005	M0RK29027V005
D, E, F	2912	M0RK29016V005	M0RK29042V005
D, E, F	2914,16,24,26	M0RK29020V005	M0RK29046V005
D, E, F	2918, 28	M0RK29025V005	M0RK29051V005
G	2905, 06, 10, 20, 22	M0RK29002V005	M0RK29028V005
G	2912	M0RK29017V005	M0RK29043V005
G	2914,16,18, 24,26, 28	M0RK29021V005	M0RK29047V005
H	2905, 06, 10, 12, 20, 22	M0RK29003V005	M0RK29029V005
H	2914,16, 24,26	M0RK29022V005	M0RK29048V005
J	22905,06,10,20,22	M0RK29004V005	M0RK29030V005
J	2912,14,16,24,26	M0RK29018V005	M0RK29044V005
K	2905,06,10,12,20,22,24	M0RK29005V005	M0RK29031V005
K	2914,16	M0RK29023V005	M0RK29049V005
K	2926,28	M0RK29026V005	M0RK29052V005
L	2905,06,10,12,20,22	M0RK29006V005	M0RK29032V005
L	2914,16,24,26	M0RK29024V005	M0RK29050V005
M	2905,06,10,12,14,20,22,24	M0RK29007V005	M0RK29033V005
N	2905,06,10,12,14,20,22,24	M0RK29008V005	M0RK29034V005
P	2905,06,10,20	M0RK29009V005	M0RK29035V005
P	2912,14	M0RK29019V005	M0RK29045V005
Q	2905,06,10,12,20,22	M0RK29010V005	M0RK29036V005
R	2905,06,10,12,20,22	M0RK29011V005	M0RK29037V005
T	2905,06,10,12,20,22	M0RK29012V005	M0RK29038V005

XXVI. Recommended Spare Parts (Contd.)

Table 24: Main Valve O-Ring Kits (Contd.)			
Material: Viton® Fluorocarbon (75 Durometer)			
Orifice	Valve Type	Part No.	
		Conventional Valves (-00)	Bellows Valves (-30)
D, E, F	2905, 06, 10, 20, 22	M0RK29001V022	M0RK29027V022
D, E, F	2912	M0RK29016V022	M0RK29042V022
D, E, F	2914,16,24,26	M0RK29020V022	M0RK29046V022
D, E, F	2918, 28	M0RK29025V022	M0RK29051V022
G	2905, 06, 10, 20, 22	M0RK29002V022	M0RK29028V022
G	2912	M0RK29017V022	M0RK29043V022
G	2914,16,18, 24,26, 28	M0RK29021V022	M0RK29047V022
H	2905, 06, 10, 12, 20, 22	M0RK29003V022	M0RK29029V022
H	2914,16, 24,26	M0RK29022V022	M0RK29048V022
J	22905,06,10,20,22	M0RK29004V022	M0RK29030V022
J	2912,14,16,24,26	M0RK29018V022	M0RK29044V022
K	2905,06,10,12,20,22,24	M0RK29005V022	M0RK29031V022
K	2914,16	M0RK29023V022	M0RK29049V022
K	2926,28	M0RK29026V022	M0RK29052V022
L	2905,06,10,12,20,22	M0RK29006V022	M0RK29032V022
L	2914,16,24,26	M0RK29024V022	M0RK29050V022
M	2905,06,10,12,14,20,22,24	M0RK29007V022	M0RK29033V022
N	2905,06,10,12,14,20,22,24	M0RK29008V022	M0RK29034V022
P	2905,06,10,20	M0RK29009V022	M0RK29035V022
P	2912,14	M0RK29019V022	M0RK29045V022
Q	2905,06,10,12,20,22	M0RK29010V022	M0RK29036V022
R	2905,06,10,12,20,22	M0RK29011V022	M0RK29037V022
T	2905,06,10,12,20,22	M0RK29012V022	M0RK29038V022

XXVI. Recommended Spare Parts (Contd)

Table 25: Pilot Valve O-Ring Kit				
Pilot Type	Buna-N	Ethylene/ Propylene	Viton	Teflon
39PV01-1-GS & LS	PSGKF - 31B	PSGKF - 31E	PSGKF - 31V	N/A
39PV07-1-GS & LS	PSGKF - 33B	PSGKF - 33E	PSGKF - 33V	N/A
39PV07-2-GS & LA	PSGK - 38B018	PSGK - 38E019	PSGK - 38V022	Note 2
39PV07-2-SS	N/A	PSGK - 38E002[1]	N/A	PSGK - 38T006
39PV37-1-GS & LS	PSGK - 35B018	PSGK - 35E019	PSGK - 35V022	N/A
39PV37-2-GS & LA	PSGK - 35B018	PSGK - 35E019	PSGK - 35V022	Note 2
39PV37-2-SS	N/A	N/A	N/A	PSGK - 35T006
39MV01, 07 & 37-GS[3]	PSGK - 32B018	PSGK - 32E019	PSGK - 32V022	Note 2
39MV01, 07 & 37-LS[3]	PSGK - 34B018	PSGK - 34E019	PSGK - 34V022	Note 2
39MV, 07 & 37-SS[3]	N/A	PSGK - 34E002	N/A	PSGK - 34T006
39MV22-LA & GS	PSGK – 46B018	PSGK – 46E019	PSGK – 46V022	PSGK – 46T006
39MV72-LA & GS	PSGK – 47B008	PSGK – 47E002	PSGK – 47V005	PSGK – 47T005

Note 1: For steam service at pressures below 50 psig (3.45 barg) the 39PV07-2-SS or 39MV07-2-SS with EPR O-Rings should be used (E962-90).

Note 2: For services other than steam consult applications engineering.

Note 3: This kit contains modulator o rings only. In addition to this psgk kit, the Comparable PV PSGK kit is also required. Example: A 39MV07-2-LS with Viton O-Rings would require a PSGK-34V022 and a PSGK-38V022.

Table 26: Pilot Valve O-Ring Kit Options[1]				
Options	Buna-N	Ethylene/ Propylene	Viton	Teflon
Field Test Connector		PSGK - 37E019		
Backflow Preventer Seal Kit	PSGK - 37B018	PSGK - 37E002[2]	PSGK - 37V022	PSGK - 37T006
Line Filter Seal Kit				SP540-JKIT

Note 1: Contact factory for kit number for Dirty Service Option.

Note 2: For steam service at pressures below 50 psig (3.45 barg) the 39PV07-2-SS or 39MV07-2-SS with EPR O-Rings should be used (E962-90).

XXVI. Recommended Spare Parts (Contd.)

Table 27: Miscellaneous Parts[1]

Description	Size	Part Number
Manual Blowdown Valve	.250" (6.35 mm) MNPT	SP348-E
Male Connector	.375" (9.53 mm) T x .250" (6.35 mm) MNPT	6000609
Male Elbow	.375" (9.53 mm) T x .250" (6.35 mm) MNPT	6000608
Nut and Ferrule Set	.375" (9.53 mm) T	6000669
Plug Filter	N/A	4818801
Union Tee	.375" (9.53 mm) T x .375" (9.53 mm) T x .375" (9.53 mm) T	6000615

Note 1: The above part numbers are 316 stainless steel material. For other material options, please contact factory.

XXVII. Field Service, Repair and Training Program

A. Field Service

Utilities and Process Industries expect and demand service on a moment's notice. Consolidated® Field Service can be depended upon for prompt response, even in extreme off-hour emergency situations.

Dresser, Inc. maintains the largest and most competent field service staff in the Industry. Service Engineers are located at strategic points throughout the United State to respond to customer's requirements for service. Each Service Engineer is factory trained and long experienced in servicing Safety Valves. Dresser Service Engineers restore disc and nozzle critical dimensions which affect valve performance and are capable of modernizing valves in the field.

It is highly recommended that the professional talents of a Dresser, Inc. Field Service Engineer be employed to make final field adjustments during the initial setting of all Consolidated® POSRV's.

All Field Service Engineer's activities are coordinated from the Alexandria, Louisiana, Field Service Office. Upon receipt of a purchase order number authorizing the trip, the service engineer is dispatched.

Contact: Field Service Dept.,
Field Service Supervisor, (318) 640-6055

B. Factory Repair Facilities

The factory at Alexandria, Louisiana maintains a Consolidated® Repair Center. The Repair Department, in conjunction with the manufacturing facilities, is equipped to perform specialized repairs and product modifications, e.g. butt-weld, bushing replacements, code welding, pilot replacement, etc.

Contact: Repair Dept., Mgr. Valve Repair,
(318) 640-2250

C. Safety Relief Valve Maintenance Training

Rising costs of maintenance and repair in the Utility and Process Industries indicate the need for trained maintenance personnel. Dresser Flow Control conducts service seminars that can help your maintenance and engineering personnel to reduce these costs.

Seminars, conducted either at your site, or at our Alexandria, Louisiana manufacturing plant, provide participants with an introduction to the basics of preventive maintenance necessary to minimize downtime, reduce unplanned repairs and increase valve safety. While these seminars do not make "instant" experts, they do provide the participants with "Hands On" experience with Consolidated® Valves. The seminar also includes valve terminology, trouble shooting, setting and testing, with emphasis on the ASME Boiler and Pressure Vessel Code.

For further information, Please contact the Product Training Manager by fax at (318) 640-6325, or telephone (318) 640-2250.

Sales Office Locations

UNITED STATES

Dresser Consolidated®
Dresser, Inc.
LA Hwy. 3225 @ US Hwy. 167N
P.O. Box 1430
Alexandria, LA 71309-1430
Telephone: + (1) 318 640 2250
Fax: + (1) 318 640 6325

Dresser Consolidated® Headquarters
10343 Sam Houston Park Drive
Suite 210
Houston, TX 77064
Telephone: +(1) 281 671 1640
Fax: +(1) 281 671 1735

Dresser Direct
1250 Hall Court
Deer Park, TX 77536
Telephone: + (1) 281 884 1000
Fax: + (1) 281 884 1010

Dresser Direct
905A Industrial Road
Clute, TX 77531
Telephone: + (1) 979 265 1309
Fax: + (1) 979 265 2514

Dresser Direct
4841 Leopard Street
Corpus Christi, TX 78408
Telephone: + (1) 361 881 8182
Fax: + (1) 361 881 8246

BRAZIL

Dresser Industria E Comercio Ltda
Rod. Presidente Dutra, KM 154, 7
Predio 18 - Pq Industrial CEP 12240-420
San Jose dos Campos, Sau Paulo, Brazil
Telephone: + (55) 11 2146 3600
Fax: + (55) 11 2146 3610

CHINA

Dresser Machinery (Suzhou) Co., Ltd.
81, Suhong Zhong Road
Suzhou Industrial Park
Suzhou, P.R. China 215021
Telephone: + (86) 512 6258 6500
Fax: + (86) 512 6258 8590

Dresser, Inc.
Suite 1703, Capital Mansion
6 Xinyuan S. Road, Chaoyang District
Beijing 100004 P.R. China
Telephone: + (86) 10 8486 4515
Fax: + (86) 10 8486 5305

FRANCE

Dresser Flow Technology Europe
Energy 5 - 130/190 Bd de Verdun
92413 Courbevoie Cedex, France
Tel: + (33) 1 49 04 90 00
Fax: + (33) 1 49 04 90 10

GERMANY

Dresser Valves Europe GmbH
Heiligenstrasse 75
41751 Viersen, Germany
Tel: + (49) 2162 8170 0
Fax: + (49) 2162 8170 280

INDIA

Dresser Valve India Pvt. Ltd.
305/306, "Midas", Sahar Plaza
Mathuradas Vasanji Road
J B Nagar, Andheri East, Mumbai, India 400 059
Telephone: + (91) 22 2 835 4790 / 838 1134
Fax: + (91) 22 2 835 4791

ITALY

Dresser Italia S.r.l.
Via Cassano 77
80020 Casavatore (Naples), Italy
Telephone: + (39) 081 7892 111
Fax: + (39) 081 7892 308

JAPAN

Dresser Japan,Ltd. (DJL)
20th Floor Marive East Tower
WBG 2-6 Nakase
Mihama-ku Chiba-shi
Chiba 261-7120 Japan
Telephone: + (81) 43 297 9211
Fax: + (81) 43 299 1115

KOREA

Dresser Korea, Inc.
Hyundai Swiss Tower, 17 Floor
143-40, Samsun-don Kangham-ku
Seoul 135-090, Korea
Telephone: + (82) 2 2274 0748
Fax: + (82) 2 2274 0720

Sales Office Locations

MALAYSIA

Dresser, Inc.
Asia Pacific Headquarters
Business Suite 19A-9-1, Level 9
UOA Centre, No. 19 Jalan Pinang
50450 Kuala Lumpur, West Malaysia
Telephone: + (60) 3 2161 0322
Fax: + (60) 3 2163 6312

MEXICO

Dresser De Mexico S.A. de C.V.
Henry Ford #114 Esq. Fulton
Fraccionamiento Industrial San Nicolas
C.P. 54030 Tlalnepantla, Estado de Mexico
Telephone: + (52) 55 5310 9863
Fax: + (52) 55 5310 4279

THE NETHERLANDS

Dresser Valves Europe GmbH
Steenhouwerstraat 11
NL-3194 AG Hoogvliet, The Netherlands
Telephone: + (31) 10 866 6538
Fax: + (31) 79 361 8995

RUSSIA

Dresser Europe
Derbenevskaya Ulitsa 1, Bldg. 3, Office 17
Moscow, Russian Federation 115 114
Telephone: + (7) 4955 851276
Fax: + (7) 4955 851279

SAUDI ARABIA

Dresser Al Rushaid Valve & Inst. Co. Ltd.
(DARVICO)
P. O. Box 10145
Jubail Industrial City 31961
Kingdom of Saudi Arabia
Telephone: + (966) 3 341 0278
Fax: + (966) 3 341 7624

SINGAPORE

Dresser Singapore, Pte. Ltd.
Dresser Flow Solutions
16 Tuas Avenue 8
Singapore 639231
Telephone: + (65) 6861 6100
Fax: + (65) 6861 7197

SOUTH AFRICA

Dresser International, Ltd., South Africa Branch
Dresser Flow Solutions
P. O. Box 2234, 16 Edendale Road
Eastleigh, Edenvale 1610
Republic of South Africa
Telephone: + (27) 11 452 1550
Fax: + (27) 11 452 2903

SPAIN

Dresser Italia S.r.l.
Via Cassano 77
80020 Casavatore (Naples), Italy
Telephone: + (39) 081 7892 111
Fax: + (39) 081 7892 308

SWITZERLAND

Dresser Valves Europe GmbH
Windenboden 23
CH-6345 Neuheim, Switzerland
Telephone: + (41) 41 755 27 03
Fax: + (41) 41 755 28 13

UNITED ARAB EMIRATES

Dresser International, Inc. - Middle East Operations
P. O. Box 61302
R/A 8, Blue Sheds JA01 & JA02,
Jebel Ali Free Zone
Dubai, United Arab Emirates
Telephone: + (971) 4 8838752
Fax: + (971) 4 8838038

UNITED KINGDOM

Dresser U.K. Limited
Dresser House
East Gillibrands
Skelmersdale, Lancashire
England WN8 9TU United Kingdom
Telephone: + (44) 1695 52600
Fax: + (44) 1695 52601

FOR YOUR GREEN TAG CENTER IN USA/CANADA
Visit www.dresser.com

or contact the locations listed above for international service.

Dresser® and Consolidated® are registered trademarks of Dresser, Inc.
Copyright 2007, Dresser, Inc.

About Dresser Consolidated

Dresser Consolidated, headquartered in Houston, Texas, has been an international leader in dependable pressure relief valves and solutions for more than 100 years. A business segment of Dresser, Inc., the company delivers the trusted expertise to provide and service reliable flow safety systems in critical applications around the world. www.dresser.com

About Dresser, Inc.

Dresser, Inc. is a leader in providing highly engineered infrastructure products for the global energy industry. The company has leading positions in a broad portfolio of products, including valves, actuators, meters, switches, regulators, piping products, natural gas-fueled engines, retail fuel dispensers and associated retail point-of-sale systems, and air and gas handling equipment. Leading brand names within the Dresser portfolio include Dresser Wayne® retail fueling systems, Waukesha® natural gas-fired engines, Masoneilan® control valves, Consolidated® pressure relief valves, and Roots® blowers. It has manufacturing and customer service facilities located strategically worldwide and a sales presence in more than 100 countries.

DRESSER Consolidated

www.consolidatedvalve.com

© 2009 Dresser, Inc. All rights reserved.

2900_MM

Consolidated

IOM 1811 Series Pressure Relief Valves

Vogt Power International

Project #: V17491 / Amata ABPRS

PO #: V0010363

Tag #: S1/S2 HAH50AA401
S1/S2 HAD50AA401
S1/S2 HAD50AA402

VOGT POWER INTERNATIONAL
Released, Work May Proceed
Harrisburg, Pennsylvania | Dec-01-2016

VOGT POWER INTERNATIONAL
V17491-PVXE-503-00
18-Nov-2016

1811 Series

Consolidated* Safety Valve Maintenance Manual

GE Data Classification : Public

THESE INSTRUCTIONS PROVIDE THE CUSTOMER/OPERATOR WITH IMPORTANT PROJECT-SPECIFIC REFERENCE INFORMATION IN ADDITION TO THE CUSTOMER/OPERATOR'S NORMAL OPERATION AND MAINTENANCE PROCEDURES. SINCE OPERATION AND MAINTENANCE PHILOSOPHIES VARY, GE (GENERAL ELECTRIC COMPANY AND ITS SUBSIDIARIES AND AFFILIATES) DOES NOT ATTEMPT TO DICTATE SPECIFIC PROCEDURES, BUT TO PROVIDE BASIC LIMITATIONS AND REQUIREMENTS CREATED BY THE TYPE OF EQUIPw xMENT PROVIDED.

THESE INSTRUCTIONS ASSUME THAT OPERATORS ALREADY HAVE A GENERAL UNDERSTANDING OF THE REQUIREMENTS FOR SAFE OPERATION OF MECHANICAL AND ELECTRICAL EQUIPMENT IN POTENTIALLY HAZARDOUS ENVIRONMENTS. THEREFORE, THESE INSTRUCTIONS SHOULD BE INTERPRETED AND APPLIED IN CONJUNCTION WITH THE SAFETY RULES AND REGULATIONS APPLICABLE AT THE SITE AND THE PARTICULAR REQUIREMENTS FOR OPERATION OF OTHER EQUIPMENT AT THE SITE.

THESE INSTRUCTIONS DO NOT PURPORT TO COVER ALL DETAILS OR VARIATIONS IN EQUIPMENT NOR TO PROVIDE FOR EVERY POSSIBLE CONTINGENCY TO BE MET IN CONNECTION WITH INSTALLATION, OPERATION OR MAINTENANCE. SHOULD FURTHER INFORMATION BE DESIRED OR SHOULD PARTICULAR PROBLEMS ARISE WHICH ARE NOT COVERED SUFFICIENTLY FOR THE CUSTOMER/OPERATOR'S PURPOSES THE MATTER SHOULD BE REFERRED TO GE.

THE RIGHTS, OBLIGATIONS AND LIABILITIES OF GE AND THE CUSTOMER/OPERATOR ARE STRICTLY LIMITED TO THOSE EXPRESSLY PROVIDED IN THE CONTRACT RELATING TO THE SUPPLY OF THE EQUIPMENT. NO ADDITIONAL REPRESENTATIONS OR WARRANTIES BY GE REGARDING THE EQUIPMENT OR ITS USE ARE GIVEN OR IMPLIED BY THE ISSUE OF THESE INSTRUCTIONS.

THESE INSTRUCTIONS ARE FURNISHED TO THE CUSTOMER/OPERATOR SOLELY TO ASSIST IN THE INSTALLATION, TESTING, OPERATION, AND/OR MAINTENANCE OF THE EQUIPMENT DESCRIBED. THIS DOCUMENT SHALL NOT BE REPRODUCED IN WHOLE OR IN PART WITHOUT THE WRITTEN APPROVAL OF GE.

© 2015 General Electric Company. All rights reserved.

Conversion Table

All the USCS values are converted to metric values using the following conversion factors:		
Metric values using the following conversion factors:	Conversion Factor	Metric Unit
in.	25.4	mm
lb.	0.4535924	kg
in^2	6.4516	cm^2
ft^3/min	0.02831685	m^3/min
gal/min	3.785412	L/min
lb/hr	0.4535924	kg/hr
psig	0.06894757	barg
ft lb	1.3558181	Nm
°F	5/9 (°F-32)	°C

Note 1: Multiply USCS value with conversion factor to get metric value.

NOTICE

For valve configurations not listed in this manual, please contact your local Green Tag* Center for assistance.

© 2015 General Electric Company. All rights reserved.

Table of Contents

I. Product Safety Sign and Label System 4
II. Safety Alerts 5
III. Safety Notice 6
IV. Warranty Information 7
V. Valve Terminology 7
VI. Storage and Handling Prior to Installation 9
VII. Introduction 9
VIII. Consolidated Safety Valve Type 1811 10
IX. Recommended Installation Practices
A. General Requirements 11
B. Outdoor Safety Valve Installation 11
X. Disassembly of 1811 Series Safety Valve 12
XI. Maintenance Instructions
A. General Information 13
B. Machining 13
C. Lapping Procedures 14
D. Reconditioning a Ring Lap 14
E. Spindle Runout 15
F. Spring and Spring Washers 15
XII. Inspection and Part Replacement
A. General Information 16
B. Specific Steps 16
XIII. Reassembly 20
XIV. Setting and Testing
A. Steam Testing Procedures 20
B. Hydrostatic Testing & Gagging 22
B.1 General Information 22
B.2 Application of Test Gags (All Pressures) 23
C. Presetting the Adjusting Rings 23
D. Electronic Valve Testing (EVT) 24
XV. Trouble Shooting the 1811 Valve 25
XVI. Maintenance Tools and Supplies 26
XVII. Replacement Parts Planning
A. Basic Guidelines 26
B. Identification and Ordering Essentials 27
XVIII. Consolidated Genuine Parts 27
XIX. Recommended Spare Parts 28
XX. Manufacturer's Field Service, Repair and Training Program
A. Factory Setting vs. Field Setting 29
B. Field Service 29
C. Factory Repair Facilities 29
D. Safety Valve Maintenance Training 29
Sales Office Locations 30

© 2015 General Electric Company. All rights reserved.

I. Product Safety Sign and Label System

If and when required, appropriate safety labels have been included in the rectangular margin blocks throughout this manual. Safety labels are vertically oriented rectangles as shown in the ***representative examples*** (below), consisting of three panels encircled by a narrow border. The panels can contain four messages which communicate:

- The level of hazard seriousness
- The nature of the hazard
- The consequence of human, or product, interaction with the hazard
- The instructions, if necessary, on how to avoid the hazard

The top panel of the format contains a signal word (DANGER, WARNING, CAUTION or ATTENTION) which communicates the level of hazard seriousness.

The center panel contains a pictorial which communicates the nature of the hazard, and the possible consequence of human or product interaction with the hazard. In some instances of human hazards the pictorial may, instead, depict what preventive measures to take, such as wearing protective equipment.

The bottom panel may contain an instruction message on how to avoid the hazard. In the case of human hazard, this message may also contain a more precise definition of the hazard, and the consequences of human interaction with the hazard, than can be communicated solely by the pictorial.

① **DANGER — Immediate hazards which WILL result in severe personal injury or death.**

② **WARNING — Hazards or unsafe practices which COULD result in severe personal injury or death.**

③ **CAUTION — Hazards or unsafe practices which COULD result in minor personal injury.**

④ **ATTENTION — Hazards or unsafe practices which COULD result in product or property damage**

© 2015 General Electric Company. All rights reserved.

II. Safety Alerts

Follow all plant safety regulations, but be sure to observe the following:

- Always lower the working pressure before making any valve adjustment. When making ring adjustments, always gag the valve before making the adjustment. This will avoid possible personal injury.
- Do not stand in front of the discharge side of a safety valve when testing or operating.
- Hearing and eye protection should be used when testing or operating a valve.
- Wear protective clothing. Hot water can burn and superheated steam is not visible.
- When removing the safety valve during disassembly, stand clear and/or wear protective clothing to prevent exposure to splatter, or any corrosive process medium, which may have been trapped inside the valve. Ensure the valve is isolated from system pressure before the valve is removed.
- Exercise care when examining a safety valve for leakage.
- Prior to each actuation, assure that no personnel are near the valve. Steam escaping from the valve during actuation can possibly cause personal injury.
- When popping a safety valve for the first time, or after refurbishment, always be prepared to actuate the valve with the lever while standing in a safe place away from the valve. This may be done by fixing a rope to the lever for actuating the valve from a distance.
- Striking a valve which is under pressure can cause premature actuation. Never tamper with the valve when system pressure is near the valve set pressure.
- Before performing any machining on valve parts, consult GE or its authorized representative. Deviation from critical dimensions can adversely affect valve performance.

© 2015 General Electric Company. All rights reserved.

III. Safety Notice

Proper installation and start-up is essential to the safe and reliable operation of all valve products. The relevant procedures recommended by GE, and described in these instructions, are effective methods of performing the required tasks.

It is important to note that these instructions contain various "safety messages" which should be carefully read in order to minimize the risk of personal injury, or the possibility that improper procedures will be followed which may damage the involved GE product, or render it unsafe. It is also important to understand that these "safety messages" are not exhaustive. GE can not possibly know, evaluate, and advise any customer of all of the conceivable ways in which tasks might be performed, or of the possible hazardous consequences of each way. Consequently, GE has not undertaken any such broad evaluation and, thus, anyone who uses a procedure and/or tool, which is not recommended by GE, or deviates from GE recommendations, must be thoroughly satisfied that neither personal safety, nor valve safety, will be jeopardized by the method and/or tools selected. Contact GE if there are any questions relative to tools/methods.

The installation and start-up of valves and/or valve products may involve proximity to fluids at extremely high-pressure and/or temperature. Consequently, every precaution should be taken to prevent injury to personnel during the performance of any procedure. These precautions should consist of, but are not limited to, ear drum protection, eye protection, and the use of protective clothing, (i.e., gloves, etc.) when personnel are in, or around, a valve work area. Due to the circumstances and conditions in which these operations may be performed on Consolidated products, and the possible hazardous consequences of each way, GE can not possibly evaluate all conditions that might injure personnel or equipment. Nevertheless, GE does offer certain Safety Allerts, listed in Section II, for customer information only.

It is the responsibility of the purchaser or user of GE valves/equipment to adequately train all personnel who will be working with the involved valves/equipment. For more information on training schedules, call 318-640-6054. Further, prior to working with the involved valves/equipment, personnel who are to perform such work should become thoroughly familiar with the contents of these instructions.

© 2015 General Electric Company. All rights reserved.

IV. Warranty Information

Warranty Statement - GE warrants that its products and work will meet all applicable specifications and other specific product and work requirements (including those of performance), if any, and will be free from defects in material and workmanship. Refer to GE's Standard Terms of Sale, or specific contract for complete details on warranty and limitation of remedy and liability.

Defective and nonconforming items must be held for GE's inspection and returned to the original F.O.B. point upon request.

Incorrect Selection or Misapplication of Products
GE cannot be responsible for customer's incorrect selection or misapplication of our products.

Unauthorized Repair Work - GE has not authorized any non-affiliated repair companies, contractors or individuals to perform warranty repair service on new products or field repaired products of its manufacture. Therefore, customers contracting such repair services from unauthorized sources must do so at their own risk.

Unauthorized Removal of Seals - All new valves and valves repaired in the field by Field Service are sealed to assure the customer of our guarantee against defective workmanship. Unauthorized removal and/or breakage of this seal will negate our warranty.

V. Valve Terminology for Safety Valves
(Paraphrased from ASME's PTC 25)

- **Backpressure**
  Backpressure is the static pressure existing at the outlet of a safety valve device due to pressure in the discharge system.
- **Blowdown**
  Blowdown is the difference between actual popping pressure of a safety valve and actual reseating pressure expressed as a percentage of set pressure, or in pressure units.
- **Bore Area**
  Bore area is the minimum cross-sectional area of the seat bushing.
- **Bore Diameter**
  Bore diameter is the minimum diameter of the seat bushing.
- **Built-Up Back Pressure**
  Pressure existing at the outlet of a safety valve while it is open and flowing through a discharge system.
- **Chatter**
  Chatter is abnormal, rapid reciprocating motion of the moveable parts of a safety valve, in which the disc contacts the seat.
- **Closing Pressure**
  Closing pressure is the value of decreasing inlet static pressure at which the valve disc re-establishes contact with the seat, or at which lift becomes zero.
- **Disc**
  A disc is the pressure containing moveable member of a safety valve which effects closure.
- **Inlet Size**
  Inlet size is the nominal pipe size of the inlet of a safety valve, unless otherwise designated.
- **Leak Test Pressure**
  Leak test pressure is the specified inlet static pressure at which a quantitative seat leakage test is performed in accordance with a standard procedure.
- **Lift**
  Lift is the actual travel of the disc away from closed position when a valve is relieving.
- **Lifting Device**
  A lifting device is a device for manually opening a safety valve, by the application of external force to lessen the spring loading which holds the valve closed.
- **Seat Bushing**
  A seat bushing is the pressure containing element which constitutes the inlet flow passage and includes the fixed portion of the seat closure.
- **Outlet Size**
  Outlet size is the nominal pipe size of the outlet passage of a safety valve, unless otherwise designated.

© 2015 General Electric Company. All rights reserved.

V. Valve Terminology for Safety Valves (Contd.)

- **Overpressure**
  Overpressure is a pressure increase over the set pressure of a safety valve, usually expressed as a percentage of set pressure.
- **Popping Pressure**
  Popping pressure is the value of increasing inlet static pressure at which the disc moves in the opening direction at a faster rate as compared with corresponding movement at higher or lower pressures. It applies only to safety or safety relief valves on compressible fluid service.
- **Pressure Containing Member**
  A pressure containing member of a safety valve is a part which is in actual contact with the pressure media in the protected vessel.
- **Pressure Retaining Member**
  A pressure retaining member of a safety valve is a part which is stressed due to its function in holding one or more pressure containing members in position.
- **Rated Lift**
  Rated lift is the design lift at which a valve attains its rated relieving capacity.
- **Safety Valve**
  A safety valve is a pressure relief valve actuated by inlet static pressure and characterized by rapid opening or pop action.
- **Set Pressure**
  Set pressure is the value of increasing inlet static pressure at which a safety valve displays the operational characteristics as defined under "Popping Pressure." It is one value of pressure stamped on the safety valve.
- **Seat**
  A seat is the pressure containing contact between the fixed and moving portions of the pressure containing elements of a valve.
- **Seat Diameter**
  Seat diameter is the smallest diameter of contact between the fixed and moving members of the pressure containing elements of a valve.
- **Seat Tightness Pressure**
  Seat tightness pressure is the specific inlet static pressure at which a quantitative seat leakage test is performed in accordance with a standard procedure.
- **Simmer**
  Simmer is the audible or visible escape of fluid between the seat and disc at an inlet static pressure below the popping pressure and at no measurable capacity. It applies to safety valves on compressible fluid service.
- **Warn**
  See "Simmer" (definition above).

© 2015 General Electric Company. All rights reserved.

VI. Storage and Handling Prior to Installation

Safety valves should be stored in a dry environment to protect them from the weather. They should not be removed from the skids or crates until immediately prior to installation. Flange protectors and sealing plugs should remain installed until just prior to installation.

Safety valves, either crated or uncrated, should never be subjected to sharp impact. This would be most likely to occur by bumping or dropping during loading or unloading from a truck or while moving with a power conveyor, such as a fork lift truck. The valve, either crated or uncrated, should always be kept with the inlet down (i.e., never laid on its side), to prevent misalignment and damage to internals. Even crated valves should always be lifted with the inlet down.

Uncrated valves should be moved or hoisted by wrapping a chain or sling, around the discharge neck, then around the upper yoke structure, in such manner as will insure that the valve is in vertical position during lift, (i.e., not lifted in horizontal position). Never lift the full weight of the valve by the lifting lever. Never hook to the spring to lift. When safety valves are uncrated and the flange protectors removed, immediately prior to installation, meticulous care should be exercised to prevent dirt from entering the outlet port while bolting in place.

While hoisting to the installation, care should be exercised to prevent bumping the valve against steel structures and other objects.

Do not lift valve horizontally, or hook to lifting lever or spring.

Prevent dirt from entering valve outlet port.

Handle valve carefully. Do not drop or strike.

VII. Introduction

The "safety valve" is the final safeguard between a controlled boiler and a catastrophic explosion. In an over-pressure situation, the pressure in the valve inlet increases until the force on the disc exerted by the system pressure equals the force exerted by the spring. This causes the safety valve to pop, or lift, relieving the excess steam until the system pressure is reduced to the desired level.

The Consolidated Safety Valve has been a leader in the industry since 1879, thus offering over a century of experience in design, engineering and product manufacture. 's history of dependable and reliable valve service assures that today's products and designs are consistent with industry's current requirements. Rigid manufacturing standards controlled by an ASME approved Quality Control Program insure that each valve will be manufactured in accordance with established design criteria and tested for functional performance. This quality controlled manufacturing and test program assures that each valve manufactured will provide long and reliable service.

© 2015 General Electric Company. All rights reserved.

VIII . Consolidated Safety Valve Type 1811

Part No.	Nomenclature
1	Base
2	Seat Bushing
3	Disc
4	Lower Adjusting Ring
5	Lower Adjusting Ring Pin
6	Upper Adjusting Ring
7	Upper Adjusting Ring Pin
8	Yoke
9	Base Stud
10	Stud Nut
11	Spindle
12	Bottom Spring Washer
13	Spring
14	Top Spring Washer
15	Compression Screw
16	Compression Screw Locknut
17	Cap
18	Cap Set Screw
19	Lever
20	Release Nut
21	Lever Pin
22	Top Lever (4" & 6" Sizes)
23	Drop Lever (4" & 6" Sizes)
24	Release Locknut

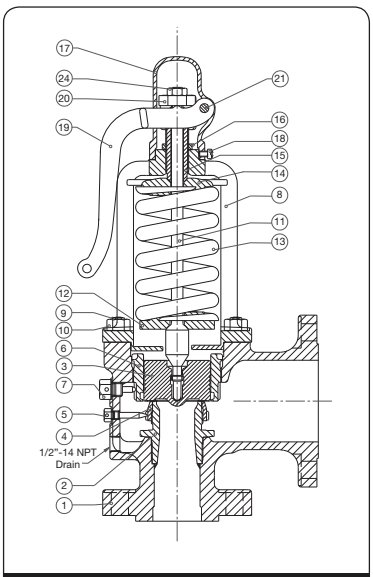

Figure 1: 1811 Consolidated Safety Valve

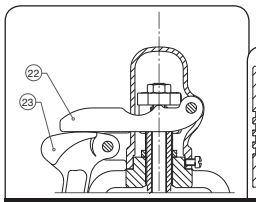

Figure 2: Cap and Lifting Lever Assembly for 4" and 6" Sizes

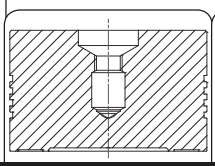
Figure 3: Flat Solid Disc (Optional)

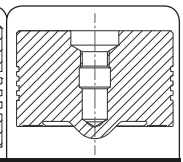
Figure 4: Thermo Lip Disc

© 2015 General Electric Company. All rights reserved.

IX. Recommended Installation Practices

A. General Requirements

The safety valve shall be connected to the boiler in a vertical position independent of any other steam connection, and attached as close as possible to the boiler. Intervening pipe or fittings shall be no longer than the face-to-face dimension of the corresponding tee fitting of the same diameter and pressure under the corresponding American Standard as set forth by the ASME.

Thoroughly clean the inlet of the valve before installation and be sure that the proper gasket is used. Tighten bolts evenly. Care should be taken when fastening bolts on cast iron flanges as cracking may result.

The valve shall be free from external stresses transmitted from the discharge piping. Figure 5 illustrates a recommended design allowing for ample clearance to take care of thermal expansion. The riser pipe should be large enough to accommodate the full capacity of the valve without causing steam to escape by flowing backward through the drip pan. In no case should the pipe connected to the valve be of a smaller size than the valve outlet.

⚠ WARNING

Know all valve exhaust/ leakage points to avoid possible severe personal injury or death.

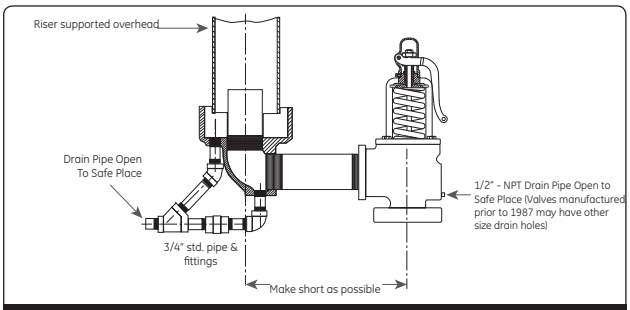

Figure 5: Recommended Installation for Discharge and Vent Piping

B. Outdoor Safety Valve Installation

When a safety valve is installed on an outdoor unit, it is advisable to insulate the valve body, including the inlet flange, up to the bottom of the yoke. The insulation will stabilize the valve body temperature preventing variation in the set pressure.

Valves must be readjusted if insulation is installed.

Weather shielding should be used to protect the spring and to minimize rain or snow from entering the valve body.

© 2015 General Electric Company. All rights reserved.

X. Disassembly of 1811 Series Safety Valve

Before removing the valve, be sure there is no steam pressure in the drum or header, then proceed as follows:

1. Remove lower ring pin.
2. Turn the lower ring upwards counting the number of notches moved until contact is made with the disc. Record this information for use during reassembly.
3. Remove the lever pin and lever.
4. Loosen the cap screw(s) and remove the cap.
5. Remove the release nut and lock nut or cotter pin.
6. Measure the distance from the top of the spindle to the top of the compression screw. Record this for use in reassembly to restore the correct spring compression.
7. Loosen the compression screw lock nut and remove the compression screw.
8. Remove the cap screws or stud nuts holding the yoke to the base and raise the yoke over the spindle.
9. Remove the spring and spring washer assembly, record the spring number stamped in the spring. Mark the spring and washers top and bottom.
10. Lift the disc and spindle straight up to remove the disc from the valve body. Engage the drop through threads of the disc and unscrew it from the spindle.
11. Measure from the top of the combination guide and upper ring to the top of the bushing seat. Record this measurement for reassembly.
12. Remove the upper ring pin.
13. Remove the combination guide and upper ring by turning it upwards until the threads disengage.
14. Remove the lower adjusting ring. The valve is now completely disassembled.

⚠ DANGER

Do not disassemble valve with pressure in drum or header, as this will result in severe personal injury or death.

© 2015 General Electric Company. All rights reserved.

XI. Maintenance Instructions

A. General Information

The 1811 Safety Valves are easily maintained. Normal maintenance usually involves:

- Disassembly
- Cleaning
- Component Inspection
- Lapping the Seats
- Reassembly
- Setting, Testing and Resealing the Valve

Occasionally, remachining the seat bushing may be necessary to extend the service life of the valve. In any case, keep all parts for each valve together or marked to insure that they are replaced in the same valve.

The following tools are recommended for normal maintenance and following remachining:

1. Flat lapping plate, (for resurfacing ring laps) - Part Number 0439004
2. Grinding Compounds
3. High temperature thread lubricant - (Fel-Pro, Nickel Ease, or equivalent)
4. Two (2) ring laps per valve size and type

Note: See maintenance Tools and Supplies in Section XVI.

All of the above tools can be purchased from GE, with prices in effect at the time of delivery. It may not be necessary to use all of the ring laps at any one time, but having a sufficient supply on hand will save reconditioning time during a boiler outage. After the boiler is back in operation, the ring laps can be reconditioned on the flat lapping plate. Lapping compound, when used with ring laps, wears off the seat surface on the disc or seat bushing, but it also wears off the flat surface of the ring lap. A lap should not be used on more than one valve without being reconditioned.

Lapping procedure for reconditioning the seating surfaces of the disc and seat bushing is outlined in Section XI.C.

B. Machining

After the parts have been determined to be reusable, proper machining technique must be employed in reestablishing disc and seat bushing dimensions.

On 1811 valves, the seat bushing should be machined in the valve base to insure proper parts alignment. When chucking the valve base or disc into a lathe, alignment must be within .001" (0.03 mm). Total indicator runout at the points indicated on Figure 6 as "A", "B", and "C".

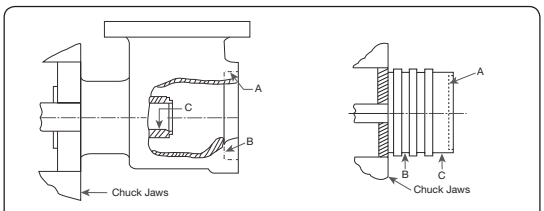

Figure 6

Note: Thermoflex™ Discs can not be machined without damaging the lip thickness.

See section XII.B for rework dimensions for the seat bushing and Flat Solid Discs.

© 2015 General Electric Company. All rights reserved.

XI. Maintenance Instructions (Contd.)

C. Lapping Procedures

1. General:

While the finer points of lapping may be considered a mechanical art, it is possible for the average mechanic to produce satisfactory results with some practice. No effort has been made in this manual to establish an exact procedure to cover each and every case because different people can achieve the same results using their own techniques.

The following materials will be of assistance when lapping bushing and/or disc seats:

a. Two ring laps per valve
b. 1-A Clover Grinding Compound
c. 1000 grit Kwik-Ak-Shun Grinding Compound
d. Lint free wipers for cleaning

2. Lapping the seat bushing or Disc Seat:

Before lapping the seat bushing and disc, use a fine grade sandpaper to lightly break the inner edge and outer edge of the bushing and disc seats. This chamfer should not exceed .002" (.05mm). If the seating surfaces require extensive lapping or reconditioning, machining should be considered prior to lapping. See Inspection Section XII.B. for criteria. Cover one flat surface of a ring lap with a thin coating of Clover 1-A Grinding Compound and gently set the lap on the seat surface. Thick coatings tend to round off edges of the seat. Lap using a slight oscillating motion in various directions. Control the motion of the lap to prevent the inside edge or outside edge of the lap from running off the seating surface, as this may cause the seat to become scratched or uneven.

3. Polishing or Finish Lapping:

Wipe off all used compound from the bushing or disc. Then use a flat, reconditioned ring lap, and light coating of Kwik-Ak-Shun™ 1000 Grit Grinding Compound to lap the seat. After lapping the seat for some time, wipe off all grinding compound from the ring lap (do not wipe off the compound on the bushing or disc seat). Using only the compound remaining on the seat, and the clean ring lap, continue to lap until it becomes difficult to move the ring lap on the seat. Again, wipe off the grinding compound from the ring lap only, and using the remaining compound on the seat continue to lap. The seating surface will become mirror like as the grinding compound is further broken down. Inspect the seat for cuts and scratches, repeat procedures as necessary to eliminate damage.

Once the seat surface is flat, clear and mirror-like, wipe all traces of grinding compound from the part and begin reconditioning the other seat. *Do not place the disc in a vice to accomplish lapping procedures, as damage can occur to disc surfaces and distortion to the seating surface.*

D. Reconditioning a Ring Lap

To recondition a ring lap, use Clover 1-A Compound on the lapping plate, and move the ring lap in a "figure 8" motion as shown in Figure 7. Continue lapping until all indications of wear (on both sides), are removed from the ring lap and a uniform grey surface is achieved. The ring lap is ready to use on the next valve. A lap that is flat within one light band is considered satisfactory for use. Information on the monochromatic light and optical flat is available upon request from the Consolidated Field Service Department.

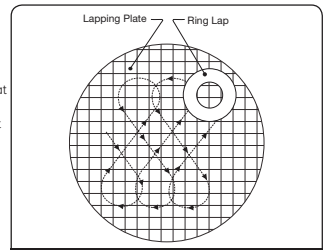

Figure 7

© 2015 General Electric Company. All rights reserved.

XI. Maintenance Instructions (Contd.)

E. Spindle Runout

It is important that the spindle be kept very straight in order to transmit the spring force to the disc without lateral binding. Overgagging is one of the common causes of bent spindles. A method to check the essential working surfaces of the spindle is illustrated in Figure 8 below.

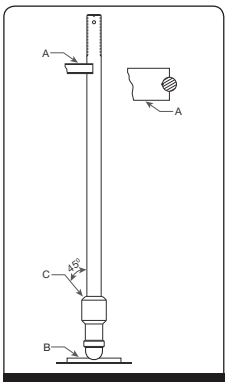

Figure 8
Spindle Check Stand

Using a spindle check stand (see Figure 8 as a reference), place the ball end of the spindle into a depression at the base "B" of the stand. Lean the upper portion of the spindle against the "V" block. It should be touching the spindle just below the threads on the upper portion of the spindle. Using a machinists indicator on a 45° angle at spindle shoulder "C", rotate the spindle and read the Total Indicator Run out on the indicator. If the TIR is less than values shown in Table 1, the spindle may be returned to service. If the TIR is greater than these values, straighten the spindle using "V" blocks and a hydraulic press until the TIR is found to be acceptable.

Table 1: Spindle Critical Dimensions

Orifice	C max	
	in.	mm
H	.004	0.10
H	.004	0.10
H	.004	0.10
J	.004	0.10
K	.007	0.18
L	.007	0.18
M	.007	0.18
N	.007	0.18
P	.007	0.18
Q	.007	0.18

Other parts of the spindle not used as working surfaces may run out considerably more than .007" (0.18 mm), but this should not be regarded as unacceptable. Although the upper thread end is not a working surface, excessive bending in this area could effect the accuracy of the Consolidated Hydroset device, and/or the Consolidated Electronic Valve Tester, if either of these devices is used to verify valve set pressure.

F. Spring and Spring Washers

Spring wire that is irregularly spaced, or the ends are not parallel, are sufficient causes for replacement. The spring washers are machined to fit the ends of the spring - there should be no more than a .030" (0.76 mm) clearance between the spring and the spring washer. If a spring is badly damaged by corrosion (flaking, pitting, or reduction in wire diameter), replace the spring with the proper spring. If the spring is unable to be identified contact the GE Field Service Department at (318) 640-6055.

© 2015 General Electric Company. All rights reserved.

XII. Inspection and Part Replacement

A. General Information

Once the valve is disassembled, the appropriate parts can be inspected for damage and their suitability for reuse.

B. Specific Steps

1. Inspect the guide inside diameter for egging, and insure the inside surface is smooth. The threads on the outside must be in good condition to insure the adjusting ring/guide will adjust when the valve is hot. If serious, large scale galling or ridges corresponding to the grooves in the disc are present, the part should be replaced.

2. **Disc :**

   The Flat Solid Disc (FSD) and the Thermoflex™ Disc (TFD). Each of these disc designs is available in either a low pressure (LP) or high pressure (HP) version.

Table 2

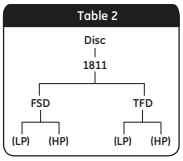

1811-HP Flat Solid Disc Machining Dimensions

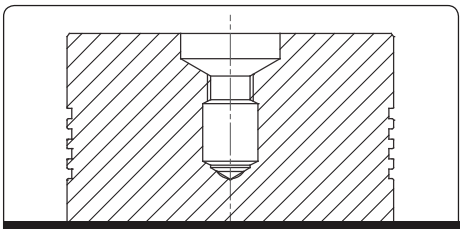

Figure 9: HP Flat Solid Disc

Table 3a: Flat Seat Disc Replacement Criteria[1]

Orifice	H min		J min	
	in.	mm	in.	mm
F	1.609	40.87	.308	7.82
G	1.547	39.29	.308	7.82
H	1.609	40.87	.406	10.31
J	1.578	40.08	.402	10.21
K	1.859	47.22	.475	12.07
L	2.266	57.56	.497	12.62
M	2.359	59.92	.558	14.17
N	2.922	74.22	.621	15.77
P	3.313	84.15	.762	19.35
Q	3.922	99.62	.840	21.34

Note 1: **Once a minimum dimension is met, disc is to be discarded.**

Table 3b: Flat Seat Disc Rework/Inspection Dimensions

Orifice	F +.002/-.003 in. (+0.05/-0.08 mm)		G	
	in.	mm	in.	mm
F	.028	0.71	.062 ± .007	1.57 ± 0.18
G	.028	0.71	.062 ± .007	1.57 ± 0.18
H	.028	0.71	.062 ± .007	1.57 ± 0.18
J	.028	0.71	.062 ± .005	1.57 ± 0.13
K	.028	0.71	.062 ± .007	1.57 ± 0.18
L	.028	0.71	.062 ± .007	1.57 ± 0.18
M	.028	0.71	.062 ± .007	1.57 ± 0.18
N	.028	0.71	.062 ± .007	1.57 ± 0.18
P	.039	0.99	.078 ± .007	1.98 ± 0.18
Q	.039	0.99	.105 ± .005	2.67 ± 0.13

© 2015 General Electric Company. All rights reserved.

XII. Inspection and Part Replacement (Contd.)

1811-HP Thermo Lip Disc Machining Dimensions

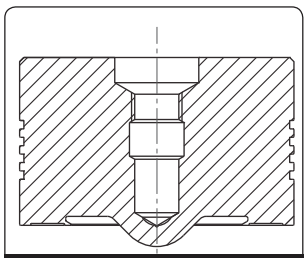

Figure 10: HP Thermo Lip Disc

Table 4: Thermo Lip Disc Replacement Criteria[1]

Orifice	F min	
	in.	mm
F	.020	0.51
G	.020	0.51
H	.020	0.51
J	.020	0.51
K	.020	0.51
L	.020	0.51
M	.020	0.51
N	.020	0.51
P	.030	0.76
Q	.030	0.76

[1] Once a minimum dimension is met, disc is to be discarded.

The 1811-HP & LP Thermoflex™ Discs are designed for steam service, and are standard on all new 1811 Safety Valves. The Thermoflex™ Disc prevents most seat damage by maintaining a tight seal at higher operating pressures than the Flat Solid Disc. Inspect the disc seat for steam cuts, nicks, or other damage. If minor damage has occurred, the seat may be restored by lightly lapping seat area G, as indicated in Figures 9 & 10. Do not machine Thermoflex™ Discs. If dimension F is reduced to the minimum indicated in Table 4, the disc should be replaced. Other replacement criteria include thread damage, spindle bearing surface damage and severe galling. Egging caused by vibration and wear also require replacement to maintain "like new" valve performance.

Note 1: Due to the thin seat lip, Thermoflex™ Discs can not be machined. Damage, if present, may be removed by lapping unit "F" (min.) is exceeded. The Thermoflex™ Disc requires replacement when the "F" (min.) dimension is exceeded

If you find flexible seating configurations different from those shown in Figures 9 & 11, replacement with the current, improved design Thermoflex™ Disc is recommended.

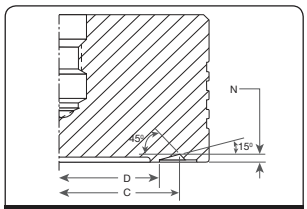

Figure 11: LP Flat Solid & Thermo Lip Discs

© 2015 General Electric Company. All rights reserved.

XII. Inspection and Part Replacement (Contd.)

Table 5: Low Pressure Disc Rework Inspection Dimensions (Note 1)

Orifice	C		Flat Seat D		Thermo Disc D		N	
	in.	mm	in.	mm	in.	mm	in.	mm
F	-	-	.834 ± .002	21.18 ± 0.05	.860 ± .002	21.84 ± 0.05	-	-
G	-	-	1.076 ± .002	27.33 ± 0.05	1.092 ± .002	27.74 ± 0.05	-	-
H	-	-	1.349 ± .002	34.26 ± 0.05	1.344 ± .002	34.14 ± 0.05	-	-
J	1.983 ± .005	50.37 ± 0.13	1.680 ± .002	42.67 ± 0.05	1.670 ± .002	42.42 ± 0.05	$.056^{+.002}_{-.003}$	$1.42^{+0.05}_{-0.08}$
K	2.372 ± .005	60.25 ± 0.13	1.977 ± .002	50.22 ± 0.05	1.990 ± .002	50.55 ± 0.05	.079 ± .002	2.01 ± 0.05
L	2.948 ± .005	74.88 ± 0.13	2.418 ± .002	61.42 ± 0.05	2.466 ± .003	62.64 ± 0.08	.096 ± .002	2.44 ± 0.05
M	3.307 ± .005	84.00 ± 0.13	2.722 ± .002	69.14 ± 0.05	2.750 ± .003	69.85 ± 0.08	.102 ± .002	2.59 ± 0.05
N	3.639 ± .005	92.43 ± 0.13	3.060 ± .003	77.72 ± 0.08	3.040 ± .005	77.22 ± 0.13	.111 ± .002	2.82 ± 0.05
P	4.418 ± .005	112.22 ± 0.13	3.700 ± .003	93.98 ± 0.08	3.680 ± .005	93.47 ± 0.13	.116 ± .002	2.95 ± 0.05
Q	5.795 ± .005	112.22 ± 0.13	4.800 ± .003	121.92 ± 0.08	4.780 ± .005	121.41 ± 0.13	.149 ± .002	3.78 ± 0.05

Note 1: All other dimensions identical to values found in table 3b

3. **Clearance between the disc and upper ring/guide:**

   Measure the I.D. of the guide and the O.D. of the disc; subtract to find the cold clearance.

The maximum clearance should not be greater than the value indicated in Table 6. Greater clearances can indicate wear and can generate alignment problems and cause the valve not to reseat properly.

Table 6: Allowable Clearance Between Upper Adjusting Ring and Disc

Orifice	Clearance				Disc Outside Diameter		Upper Adjusting Ring (Inside Diameter)	
	min		max					
	in.	mm	in.	mm	in.	mm	in.	mm
F	.004	0.10	.011	0.28	1.189	30.20	1.200	30.48
G	.008	0.20	.015	0.38	1.521	38.63	1.536	39.01
H	.007	0.18	.014	0.36	1.905	48.39	1.919	48.74
J	.009	0.23	.014	0.36	2.445	62.10	2.459	62.46
K	.006	0.15	.013	0.33	2.926	74.32	2.939	74.65
L	.011	0.28	.014	0.36	3.638	92.41	3.652	92.76
M	.007	0.18	.014	0.36	4.079	103.61	4.093	103.96
N	.012	0.30	.019	0.48	4.483	113.87	4.502	114.35
P	.008	0.20	.017	0.43	5.448	138.38	5.465	138.81
Q	.010	0.25	.019	0.48	7.137	181.28	7.156	181.76

Note 1: Once clearance exceeds table values, further inspection is required for the disc and adjusting ring.

© 2015 General Electric Company. All rights reserved.

XII. Inspection and Part Replacement (Contd.)

4. **Adjusting rings:**

   If damage is present on the lower surface of the upper adjusting ring, or on the upper surfaces of the lower adjusting ring, the damaged part must be replaced. Thread damage may also be a cause for replacement, if it prevents adjustments when the valve is heated.

5. **Bushing Seat:**

   Seat bushings are normally treated as part of the valve body and should be machined when necessary, inside the valve body. (See Seat Bushing Machining Instructions, Section XI.B) When the "E" dimensions are reduced by machining or lapping to a minimum given in Table 7, the valve seat bushing should be remachined to the given dimensions. The bushing seat can be remachined in 1811 Safety Valves until the limiting dimensions are reached. See instructions concerning the "Z" dimension in Table 7. The bushing seat must be lapped to a mirror finish to determine if they are flat and free of nicks, cuts and scratches. (See Section XI.C for Lapping Instructions.)

Table 7: Base and Seat Bushing Assembly Rework/Inspection Dimensions

Orifice	B max		C		E[1]		F		Z max	
	in.	mm	in.	mm	in.	mm	in.	mm	in.	mm
F	.740	18.80	.839 $^{+.001}_{-.002}$	21.31 $^{+0.03}_{-0.05}$	.028 $^{+.002}_{-.003}$	0.71 $^{+0.05}_{-0.08}$	.113 $^{+.002}_{-.003}$	2.87 $^{+0.05}_{-0.08}$	2.083	52.91
G	.947	24.05	1.069 $^{+.001}_{-.002}$	27.15 $^{+0.03}_{-0.05}$	.028 $^{+.002}_{-.003}$	0.71 $^{+0.05}_{-0.08}$	.089 $^{+.002}_{-.003}$	2.26 $^{+0.05}_{-0.08}$	2.083	52.91
H	1.182	30.02	1.353 $^{+.001}_{-.002}$	34.37 $^{+0.03}_{-0.05}$	.028 $^{+.002}_{-.003}$	0.71 $^{+0.05}_{-0.08}$	.103 $^{+.002}_{-.003}$	2.62 $^{+0.05}_{-0.08}$	2.203	55.96
J	1.513	38.43	1.677 $^{+.002}_{-.001}$	42.60 $^{+0.05}_{-0.03}$	.028 $^{+.002}_{-.003}$	0.71 $^{+0.05}_{-0.08}$	.126 $^{+.002}_{-.003}$	3.20 $^{+0.05}_{-0.08}$	2.271	57.68
K	1.809	45.95	1.999 $^{+.001}_{-.002}$	50.77 $^{+0.03}_{-0.05}$	.028 $^{+.002}_{-.003}$	0.71 $^{+0.05}_{-0.08}$	.145 $^{+.002}_{-.003}$	3.68 $^{+0.05}_{-0.08}$	2.645	67.18
L	2.248	57.10	2.479 $^{+.001}_{-.002}$	62.97 $^{+0.03}_{-0.05}$	.028 $^{+.002}_{-.003}$	0.71 $^{+0.05}_{-0.08}$	.174 $^{+.002}_{-.003}$	4.42 $^{+0.05}_{-0.08}$	3.083	78.31
M	2.523	64.08	2.779 $^{+.001}_{-.002}$	70.59 $^{+0.03}_{-0.05}$	.028 $^{+.002}_{-.003}$	0.71 $^{+0.05}_{-0.08}$	.192 $^{+.002}_{-.003}$	4.88 $^{+0.05}_{-0.08}$	3.458	87.83
N	2.773	70.43	3.073 $^{+.003}_{-.003}$	78.05 $^{+0.08}_{-0.08}$	.028 $^{+.002}_{-.003}$	0.71 $^{+0.05}_{-0.08}$	.206 $^{+.002}_{-.003}$	5.23 $^{+0.05}_{-0.08}$	3.958	100.53
P	3.364	85.45	3.718 $^{+.002}_{-.002}$	94.44 $^{+0.05}_{-0.05}$	.039 $^{+.002}_{-.003}$	0.99 $^{+0.05}_{-0.08}$	.245 $^{+.002}_{-.003}$	6.22 $^{+0.05}_{-0.08}$	4.458	113.23
Q	4.424	112.37	4.818 $^{+.001}_{-.002}$	122.38 $^{+0.03}_{-0.05}$	.039 $^{+.002}_{-.003}$	0.99 $^{+0.05}_{-0.08}$	.312 $^{+.002}_{-.003}$	7.92 $^{+0.05}_{-0.08}$	5.333	135.46

[1] Seat profile must be reestablished when Dimension (E) is .020" (0.51 mm) for Orifice F - N, or .030" (0.76 mm) for P – Q Orifice. Once (Z max.) has been reached, discard. Do not remachine the head flange to reestablish (Z).

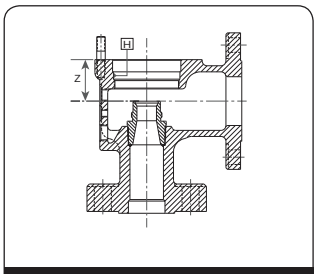

Figure 12: Base and Seat Bushing Assembly

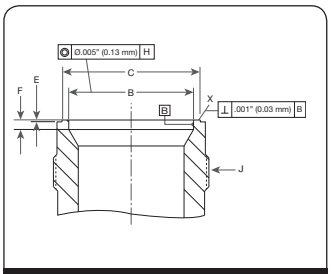

Figure 13: Base and Seat Bushing Assembly

© 2015 General Electric Company. All rights reserved.

XIII. Reassembly of 1811 Series Safety Valve

During reassembly, three items are of extreme importance. They are:

1) Alignment
2) Cleanliness
3) Lubrication

To achieve the correct alignment, the bearing surfaces of the compression screw/upper spring washer, spindle/lower spring washer and spindle to disc pocket should each be ground together to attain a perfect match. This is done by applying a lapping and grinding compound of about 500grit on one of the surfaces and rubbing them together until a smooth unbroken contact point is established on both surfaces.

All bearing surfaces and threaded areas must be lubricated using a high quality high temperature lubricant. At the factory, nickel-ease is used and is recommended. For environments where corrosion is a problem, contact the factory field service department for suggestions on special coating or plating procedures which will protect the parts.

1. Thread the lower ring onto the seat bushing and turn it down until it is below the seating surface. (This allows the disc to rest on the bushing without interference from the ring).
2. Thread the upper ring/guide into the valve body reestablishing its original relationship to the bushing, as measured in Disassembly, Step 2. Insert the upper adjusting ring pin into the valve and tighten. The ring should now be able to rock back and forth but not turn. If position is not known, refer to Section XII.
3. After inspecting both the disc and bushing seat for cleanliness, thread the spindle into the disc and insert the disc gently into the valve until it rests on the bushing.
4. Place the spring and spring washer into the yoke.
5. Place the yoke over the spindle and replace the cap screws or nuts. Care must be taken to tighten the yoke down evenly to prevent distortion and misalignment.
6. Thread the compression screw into the yoke, reestablish the original relationship between compression screw and spindle, as measured in disassembly, Step 6. Then tighten the compression screw lock nut.
7. Raise the lower ring until it contacts the disc then lower it the number of notches needed to reestablish its original relationship to the disc. Thread the lower adjusting ring pin into the body and tighten. The ring should be free to rock back and forth but not turn. If position is not known, refer to Section XIV.C.
8. Thread the release nut onto the spindle and replace the cap, lever and lever pin. Adjust the release nut so there is from .125" (3.18mm) to 0.063" (1.59mm) clearance between the release nut and lever. Remove the lever pin, lever and cap, replace the lock nut or cotter pin, and tighten it against the release nut. Replace the cap, lever, lever pin and cotter pin and tighten the set screw. The valve is now ready for setting and testing.

XIV. Setting and Testing

A. Steam Testing Procedures

1. Remove the caps on all valves to be set on the steam drum and main steam line, or other pressure vessel.
2. Install a "verified calibrated" pressure gauge on the drum near the valves being set. When the main steam line valves are to be set, install the calibrated gauge to read line pressure upstream of the valves to be tested.
3. After the pressure in the boiler has increased to 80% of the operating pressure, install gags on all valves except the high set valve. Gags should be installed hand tight (no wrenches or mechanical force).
4. Examine the nameplate on the high set valve. The symbol that is present on the nameplate will indicate the proper standard of operation, as described in Table 8.

   During reassembly, the adjusting rings and compression screw should be reset as they were prior to disassembly. (If the correct adjusting rings positions are not known, the adjusting rings should be preset according to instructions in Section XIV.C.) Before attempting to make ring adjustments on a valve under pressure, **gag the valve.**

© 2015 General Electric Company. All rights reserved.

XIV. Setting and Testing

Table 8

ASME Boiler and Pressure Vessel Code Section and Symbol V **CODE SYMBOL STAMP ASME Section I**	Set Pressure Tolerance (The valve must "POP" open within the range indicated below.) If valve set pressure is less than or equal to 70 psig (4.83 barg) ±2 psig (±0.14 barg) If valve set pressure is 71 psig (4.90 barg) up to and including 300 psig (20.68 barg) ±3% of set pressure If valve set pressure is 301 psig (20.75) up to and including 1000 psig (68.75 barg) ±10 psig (±0.69 barg) If valve set pressure is 1001(69.02 barg) or greater ±1% of set pressure	Blowdown Requirements After opening, the valve must reclose within a range of 98% to 96%, however, if the valve set pressure is 100 psig (6.89 barg) or less the valve must reclose within a range of 2 to 4 psig (0.14 to 0.28 barg) below set pressure.
UV **CODE SYMBOL STAMP ASME Section VIII**	If valve set pressure is less than or equal to 70 psig (4.83 barg) ±2 psig (±0.14 barg) If valve set pressure is 71 psig (4.90 barg) or greater ±3% of set pressure	After opening the valve must reclose before the system pressure returns to normal operating pressure.

GE RECOMMENDS THAT THE MAXIMUM OPERATING PRESSURE NEVER EXCEEDS 94% OF THE SET PRESSURE OF 1811 SERIES SAFETY VALVE.

5 When presetting is complete, remove the gag and replace the cap and lifting lever assembly. Attach a rope to the lever and stand by to hold the valve open if necessary. Now the valve is ready to test.

6. Increase the boiler pressure at a rate not to exceed 2 psig (0.14 barg) per second. Note and record the pressure indicated on the pressure gauge when the valve pops open. After the valve pops open, reduce the fire in the boiler and lower the pressure until the valve closes. Note and record the pressure when the valve closes.
7. Determine if the valve popping point and reseating point comply with the ASME requirements.
   a. If the valve operation meets the appropriate standard, raise the pressure in the boiler and conduct two more verification test.
   b. If in raising the boiler pressure, the valve does not pop open within 3% overpressure (for ASME Section I valves), or 10% overpressure (for ASME Section VIII valves), **reduce the fire in the boiler and pull the rope to open the valve.** Release the rope and allow the valve to close when the boiler pressure returns to operating level. Allow the boiler to reduce to approximately 85% of the set pressure. Remove the cap and lifting lever assembly from the valve, and turn the compression screw lock nut counter-clockwise (as viewed from the top of the valve) until it moves freely. Reduce the compression in the spring by turning the adjusting screw counter clockwise one turn (as viewed from the top of the valve). Replace the cap and lifting lever and retest the valve. Continue repeating this procedure until the valve opens at, or below, the set pressure recorded on the nameplate.

© 2015 General Electric Company. All rights reserved.

XIV. Setting and Testing (Contd.)

   c. If the valve opens at a pressure below the recorded set pressure, allow the valve to close and the boiler pressure to reduce to 85% of set pressure. Increase the compression on the spring by turning the compression screw clockwise 1/6th of a turn. Tighten the adjusting screw lock nut and replace the cap and lifting lever assembly. Retest the valve as described in Step 6. If the valve continues to open below the required set pressure, calculate how many turns to move the adjusting screw to cause the valve to open at the correct set pressure. Adjust as necessary.
   d. If the valve opens and closes rapidly, (called "chattering") hold the valve open to prevent damage to the valve. **Reduce the fire in the boiler** and allow the boiler pressure to reduce to approximately 85% of the set pressure. Gag the valve, and reset the adjusting rings according to presetting instructions, (see Section XIV.C).
   e. If the valve indicates simmer at a pressure greater than 1% of the set pressure of the valve, allow the valve to reseat and the boiler pressure to reduce to 85% of set pressure. **Gag the valve** to prevent accidental lifting while making adjustments. Remove the lower adjusting ring pin and raise the lower adjusting ring. As viewed through the ring pin hole, move the adjusting ring from left to right one or two notches. Remove the gag, retest and note when simmer occurs and repeat as necessary.

Note: The lower adjusting ring should be adjusted to the notch that provides a minimum of simmer and does not interfere with the blowdown of the valve.

   f. If the valve "pops" open then drops out of lift, like it was going to close, but remains open at a very low lift, this is called a "hang up" and indicates that the position of the lower adjusting ring is interfering with the blowdown of the valve. To correct a hang up, **gag the valve**, remove the lower ring pin and lower the adjusting ring one notch (as viewed through the ring pin hole, move the adjusting ring from the right to the left to lower the adjusting ring). Remove the gag, retest and note the reseating pressure of the valve it should close sharply at a higher pressure.
   g. If the valve closes sharply but the reseating pressure is too low in comparison to the standard in Table 8, blowdown is excessive. Gag the valve, remove the upper ring pin, raise the upper adjusting ring 10 notches, replace the ring pin, remove the gag and retest the valve. If the reseating pressure has not risen enough to meet the blowdown standard, repeat the procedure until the blowdown standard is achieved.

Note: It may be possible that in raising the upper adjusting ring to reduce the blowdown, the valve may develop a hang up, correct it as described in step f. above, and then continue if necessary to reduce the blowdown.

   h. If the blowdown is less than the standard required, the reseating pressure can be lowered by gagging the valve, removing the upper ring pin and lowering the upper adjusting ring 10 notches (as viewed through the ring pin hole, move the adjusting ring from the right to the left.) Remove the gag, replace the adjusting ring pin and retest the valve. If the reseating pressure is not reduced enough to meet the standard, repeat this procedure until the standard is achieved. The upper adjusting ring should be positioned to provide no more blowdown than that indicated in the ASME Code Standard.
8. Once the valve has tested in compliance with the appropriate standard, conduct two more verification tests. All external adjustments should be sealed after completing final setting.
9. Proceed to the next valve to be tested.

B. Hydrostatic Testing & Gagging

B.1 General Information

During any hydrostatic test all safety valves on the unit must be gagged. This gagging procedure prevents the possibility of damage to the safety valve internals in the event that the test pressure exceeds the safety valve set pressure.

When hydrostatic pressure will exceed the set pressure of the safety valve, it is recommended the valve be replaced with a blind flange during hydrostatic testing.

Probably the most common source of safety valve trouble is overgagging. During hydrostatic testing, and during safety valve setting, gags should be applied only hand tight. During setting, overgagging could cause damage to the seating surface and result in leakage. In applying gags, remember that the valve spring will hold the valve closed against its set pressure. The additional gag load applied should be only enough to insure that the valves do not lift at the expected over-pressure.

© 2015 General Electric Company. All rights reserved.

XIV. Setting and Testing (Contd.)

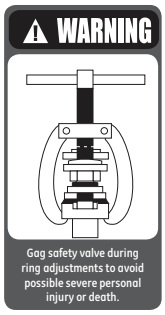

Gags should never be applied when the boiler is cold. The spindle of the safety valve expands considerably with the temperature increase as pressure is raised. If it is not free to expand with this temperature change, the spindle may be damaged.

Boiler pressure should be increased to 80% of the pressure of the low set valve before applying the gags.

Hand tighten the gags of drum and superheater valves with only a light force.

B.2 Application of Test Gags (All Pressures)

1. Refer to Figures 1 & 2 on Section VIII. Remove lever pin and lever. Then loosen cap screw and remove cap.
2. Center the test gag screw in the exposed end of the spindle and hook the legs of gag under the sides of the yoke as shown in Figure 14.
   Do not apply the gag load until the boiler hydrostatic pressure is equal to 80% of the pressure to which the low set valve is adjusted.
3. Apply the gag load by turning the gag screw clockwise. If the gag on any valve has not been tightened sufficiently, the valve will leak.
   If this occurs, the hydrostatic test pressure should be reduced until the valve becomes tight and then the gag should be tightened still further.
   This procedure must be followed exactly since it is very difficult to stop the leak by additional gagging once it has started. Any attempt to pinch off the leakage through the valve without first lowering the hydrostatic pressure may result in damage to the valve seats.
4. After the hydrostatic test is completed, the gags should be removed when the hydrostatic pressure has been reduced to 85% to 90% of the low set valve.
   Under no circumstances should the gags be left on valves with no hydrostatic pressure on the system.

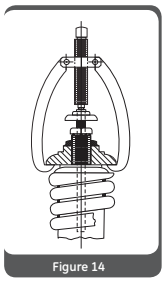

Figure 14

C. Presetting the Adjusting Rings

If the correct position of the adjusting rings (as measured in the disassembly procedure (see Section X) is not known, the valve adjusting rings may be positioned using the information in Table 9.

The lower ring may be positioned by turning the lower adjusting ring up until it contacts the disc. After choosing the appropriate orifice size, turn the adjusting ring down the corresponding number of notches listed in the "Lower Ring" column. Then, replace the adjusting ring pin. The adjusting ring must be free to move both directions, but not rotate.

The upper ring may be positioned by turning the upper adjusting ring down towards the nozzle bushing, until it becomes level with the bottom of disk. Then after choosing the appropriate orifice size, turn the adjusting ring down the corresponding number of turns (360°) listed in the "Upper Ring" column. Then replace the adjusting ring pin. The adjusting ring must be free to move both directions, but not rotate.

The adjusting rings are now in a starting position for full lift steam testing. These adjusting ring settings will generally provide a blowdown greater than required by Section I of the ASME Code, and should be adjusted for the particular application.

© 2015 General Electric Company. All rights reserved.

XIV. Setting and Testing (Contd.)

Adjusting Ring Settings

NOTE: It is important to note that all adjustments of adjusting rings are GE initial adjustments only, and are not intended to be final adjustments. This final adjustment must be made on the operating system with conditions approximating those that will be realized under actual operating conditions.

Table 9: Adjusting Ring Settings

Orifice	Upper Ring No. of Notches	Lower Ring No. of Notches	Upper Ring Position from Being Level with Bottom of the Disc[1]	Lower Ring Position From Disc Contact[2]
F	30	26	Down Two Turns	Down 4 to 6 Notches
G	30	30	Down Two Turns	Down 4 to 6 Notches
H	30	24	Down Two Turns	Down 5 to 8 Notches
J	36	30	Down Two Turns	Down 5 to 8 Notches
K	45	32	Down Two Turns	Down 6 to 10 Notches
L	54	40	Down Two Turns	Down 6 to 15 Notches
M	45	36	Down Two Turns	Down 6 to 15 Notches
N	50	40	Down Two Turns	Down 6 to 15 Notches
P	50	42	Down Two Turns	Down 8 to 15 Notches
Q	60	48	Down Two Turns	Down 8 to 15 Notches

[1] After final set pressure adjustment, set and pin the upper ring to the above specification.

[2] These specifications are approximate starting positions. Adjust ring until "good" pop is achieved. Lock ring and record this position on test report.

D. Electronic Valve Testing (EVT)

Periodic tests may be required for verification of valve set pressure. The Consolidated EVT provides for this capability. However, set pressure is the only factor which can be verified. Valves should be initially set using full system pressure (as outlined in Section XVI). The EVT may be used for subsequent checks of set pressure.

Accuracy of results obtained by the use of this device depends on several factors. First, friction must be reduced as a source of error so that, for a given pressure, the EVT repeatedly produces exactly the same lifting force. Second, gauge calibration and vibration, and the effective seating area between valves of the same size and type, will also affect accuracy. With well calibrated gauges and valve seats in good condition, accuracy on the order of 1% of set pressure may be expected. Upon request, GE will provide pertinent written material concerning the EVT. This material specifies all required information necessary to insure proper usage of this device.

© 2015 General Electric Company. All rights reserved.

XV. Trouble Shooting The 1811 Valves

Problem		Possible Cause		Corrective Action
Valve does not go into full lift.	A.	Upper ring positioned too high	A.	Lower upper adjusting ring
	B.	Foreign material trapped between disc holder & guide	B.	Disassemble valve and correct any abnormality. Inspect system for cleanliness.
Failure to open at set pressure Simmer	A.	Improper compression screw adjustment	A.	Adjust set pressure
	B.	Lower ring positioned too low.	B.	Raise lower adjusting ring
	C.	Steam line vibrations	C.	Investigate and correct cause
Valve Leaking and/ or exhibits erratic popping actions.	A.	Damaged seat	A.	Disassemble valve, lap seating surfaces, replace disc if required.
	B.	Part misalignment	B.	Disassemble valve, inspect contact area of disc and seat bushing, lower spring washer or spindle, compression screw, spindle straightness, etc.
	C.	Operating too close to set pressure	C.	Lower operating pressure and/or retrofit to Thermoflex™ Disc design.
	D,	Discharge stack binding on valve outlet	D,	Correct source of binding
Hang-up, or valve does not close completely.	A.	Lower ring positioned too high	A.	Move lower ring to the left one notch per adjustment and test. Repeat until problem is eliminated.
	B.	Foreign material	B.	Disassemble valve and correct any abnormal condition. Inspect system for cleanliness.
	C.	Improper disc/guide clearance	C.	Verify proper clearance
Excessive blowdown	A.	Upper ring positioned too low.	A.	Raise upper adjusting ring
	B.	Built up back pressure excessive	B.	Decrease exhaust pressure by increasing discharge stack area.
Chatter or short blowdown	A.	Upper ring positioned too high	A.	Lower upper adjusting ring
	B.	Excessive inlet piping pressure drop	B.	Reduce inlet pressure drop to less than one-half of required valve blowdown by redesigning inlet piping.
	C.	Valve size improper for application	C.	Verify valve sizing

© 2015 General Electric Company. All rights reserved.

XVI. Maintenance Tools and Supplies

Table 10: Maintenance Tools and Supplies

Ring Laps

Valve Orifice	Part No.	Valve Orifice	Part No.
F	1672805	M	1672810
G	1672805	N	1672811
H	1672806	P	1672811
J	1672807	Q	1672812
K	1672808		
L	1672809		

Lapping Compounds

Brand	Grade	Grit	Lapping Function	Size Container	Part No.
F 1. Clover	1A	320	General	4 oz.	1993
G 2. Clover	3A	500	Finishing	4 oz.	1994
3. Kwik-AK	--	1000	Polishing	1 lb.	19911
- Shun				2 oz.	19912

Lubricants

Brand	Application Points	Size Container	Part No.
Nickel Ease	All threaded connections	2 oz.	VA437
	Spindle Tip-Ball End		
	Spindle-Washer Bearing Radius		
	Compression Screw-Bearing End		

XVII. Replacement Parts Planning

A. Basic Guidelines

The basic objectives in formulating a replacement parts plan are:

- PROMPT AVAILABILITY
- MINIMUM DOWNTIME
- SENSIBLE COST
- SOURCE CONTROL

Consult the Recommended Spare Parts list (see Section XIX of this manual) to define the parts to be included in the inventory plan.

Select parts and specify quantities.

Guidelines for establishing meaningful inventory levels:

Parts Classification

Part Classification	Replacement Frequency	Predicted Availability
CLASS I	Most Frequent	70%
CLASS II	Less Frequent But Critical	85%
CLASS III	Seldom Replaced	95%
CLASS IV	Hardware	99%
CLASS V	Practically Never Replaced	100%

© 2015 General Electric Company. All rights reserved.

XVII. Replacement Parts Planning (Contd.)

B. Identification and Ordering Essentials

Identification and Ordering Essentials

When ordering service parts, please furnish the following information to ensure receiving the correct replacement parts:

Identify valve by the following nameplate data:

1. Size
2. Type
3. Temperature Class
4. Serial Number

   Example: 1 1/2" 1811JA-0-6X1-22

   BY-23098

Specify parts required by:

1. Part Name (See illustration at front of manual).
2. Part Number (if known)
3. Quantity

Contact Parts Marketing: 1-318-640-2250

In addition, the serial number is stamped on the top edge of the outlet flange. Be sure to include the one or two letters preceding the figures in the serial number. A typical valve nameplate is shown in Figure 15.

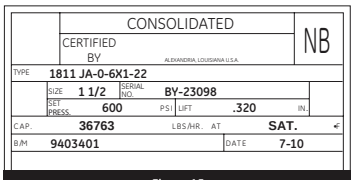

Figure 15

XVIII. Consolidated Genuine Parts

The next time replacement parts are needed, keep these points in mind:

- GE designed the parts
- GE guarantees the parts
- Consolidated valve products have been in use since 1879
- GE has worldwide service
- GE has fast response availability for parts

© 2015 General Electric Company. All rights reserved.

XIX. Recommended Spare Parts

Table 11

Class	Part No.[1]	Part Name	Ratio Parts/ Valves (Minimum)	Ratio Parts/ Valves (Maximum)	Predicted Availability
I	3	Disc	1/3	1/1	70%
	5	Adj. Ring Pin (Lower)	1/3	1/1	
	7	Adj. Ring Pin (Upper)	1/3	1/1	
II	4	Adj. Ring (Lower)	1/5	1/3	85%
	6	Adj. Ring (Upper) 1811B	1/5	1/3	
		Adj. Ring (Upper) 1811D	1/5	1/3	
	11	Spindle	1/5	1/3	
III	2	Seat Bushing	1/5	1/3	95%
	12	Bottom Spring Washer	1 Set/5	1 Set/3	
	13	Spring	1/5	1/3	
	14	Top Spring Washer	1/5	1/3	
	15	Compression Screw	1/5	1/3	
IV	16	Compression Screw Locknut	1/5	1/3	99%
	17	Cap (F, G, H & J)	1/5	1/3	
		Cap (K, L, N, P & Q)	1/5	1/3	
	18	Cap Set Screw	1/5	1/3	
	19	Lever	1/5	1/3	
	20	Release Nut	1/5	1/3	
	21	Lever Pin	1/5	1/3	
	22	Top Lever (4" & 6" Sizes)	1/5	1/3	
	23	Drop Lever (4" & 6" Sizes)	1/5	1/3	
	24	Release Locknut	1/5	1/3	

[1] The 1811 Seat Bushing is welded into the body. It is not replaceable in the field. Return to Factory for replacement, or order new Body-Bushing Assembly.

DESIGN CODE KEY:

FSD - Flat Solid Design is designated by a "-20" or "-21" in the valve code on the nameplate (example: 1 1/4" 1811 FA-0-3X1-20).

TFD - Thermoflex™ Disc Design is designated by a "-22" or "-23" in the valve code on the nameplate (example: 1 1/4" 1811 FA-0-3X1-22). Will be furnished in all 1811 Valves shipped after January 1984, unless otherwise specified by customer.

Retrofit - Thermoflex™ Disc

Retrofit Kits have been developed for converting older 1811 Series Valves from solid disc to Thermoflex™ Disc design. The Kits include a new spindle and disc. The Thermoflex™ Disc design provides a significant improvement in seating tightness. The Retrofit can be installed during a routine overhaul at very little additional cost.

A retrofit tag should be added beneath the original nameplate to reflect this design change.

Note: Older 1811 Safety Valves have bottom spring washers which may require changing when retrofitting.

© 2015 General Electric Company. All rights reserved.

XX. Manufacturer's Field Service & Repair Program

A. Factory Setting vs. Field Setting

Every Consolidated Safety Valve is set and adjusted on steam before shipment from the factory. Ring adjustments are made at the factory. However, it must be recognized that actual field operating conditions may vary considerably from factory test conditions.

Conditions beyond the manufacturer's control that affect Safety Valve operation include:

- Improper header nozzle design
- Quality of media being discharged
- Discharge piping stresses and back pressure
- Ambient temperature
- Shipping or storage damage
- Improper gagging
- Damage due to foreign material in the steam

Final Safety Valve adjustments made on the actual installation are the best means of ensuring that the valves perform in compliance with the ASME Boiler Code and/or other applicable code requirements.

B. Field Service

Utilities and Process Industries expect and demand service at a moment's notice. Consolidated Field Service can be depended upon for prompt response, even in extreme off-hour emergency situations.

GE maintains the largest and most competent field service staff in the industry. Service Engineers are located at strategic points throughout the United States to respond to customer's requirements for service. Each Service Engineer is factory trained and long experienced in servicing Safety Valves. GE Service Engineers restore disc and seat bushing critical dimensions which affect valve performance, and are capable of modernizing valves in the field.

It is highly recommended that the professional talents of a Consolidated Field Service Engineer be employed to make final field adjustments during the initial setting of all Consolidated Safety Valves.

All Field Service Engineers' activities are coordinated from the Alexandria, Louisiana, Field Service Office. Upon receipt of a purchase order number authorizing the trip, the engineer is dispatched.

Reference: www.geoilandgas.com/valves to locate your local Consolidated Field Service representative.

C. Factory Repair Facilities

The factory at Alexandria, Louisiana maintains a Consolidated Repair Center. The repair department, in conjunction with the manufacturing facilities, is equipped to perform specialized repairs and product modifications, e.g. bushing replacements, hydroset calibrations, electromatic relief valve repairs, etc.

Contact: Consolidated Valve Repair Department at (318) 640-6057.

D. Safety Valve Maintenance Training

Rising costs of maintenance and repair in the Utility and Process Industries indicate the need for trained maintenance personnel. Industrial Valve Operation conducts service seminars that can help your maintenance and engineering personnel to reduce these costs.

Seminars, conducted either at your site, or at our Alexandria, Louisiana manufacturing plant, provide participants with an introduction to the basics of preventative maintenance. These seminars help to minimize downtime, reduce unplanned repairs and increase valve safety. While they do not make "instant" experts, they do provide the participants with "Hands On" experience with Consolidated Valves. The seminar also includes valve terminology and nomenclature, component inspection, trouble shooting, setting and testing, with emphasis on the ASME Boiler and Pressure Vessel Code.

For further information, Please contact the Product Training Manager by fax at (318) 640-6325, or telephone (318) 640-6054.

© 2015 General Electric Company. All rights reserved.

DIRECT SALES OFFICE LOCATIONS

AUSTRALIA
Brisbane:
Phone: +61-7-3001-4319
Fax: +61-7-3001-4399

Perth:
Phone: +61-8-6595-7018
Fax: +61 8 6595-7299

Melbourne:
Phone: +61-3-8807-6002
Fax : +61-3-8807-6577

BELGIUM
Phone: +32-2-344-0970
Fax: +32-2-344-1123

BRAZIL
Phone: +55-11-2146-3600
Fax: +55-11-2146-3610

CHINA
Phone: +86-10-5689-3600
Fax: +86-10-5689-3800

FRANCE
Courbevoie
Phone: +33-1-4904-9000
Fax: +33-1-4904-9010

GERMANY
Ratingen
Phone: +49-2102-108-0
Fax: +49-2102-108-111

INDIA
Mumbai
Phone: +91-22-8354790
Fax: +91-22-8354791

New Delhi
Phone: +91-11-2-6164175
Fax: +91-11-5-1659635

ITALY
Phone: +39-081-7892-111
Fax: +39-081-7892-208

JAPAN
Chiba
Phone: +81-43-297-9222
Fax: +81-43-299-1115

KOREA
Phone: +82-2-2274-0748
Fax: +82-2-2274-0794

MALAYSIA
Phone: +60-3-2161-0322
Fax: +60-3-2163-6312

MEXICO
Phone: +52-55-3640-5060

THE NETHERLANDS
Phone: +31-15-3808666
Fax: +31-18-1641438

RUSSIA
Veliky Novgorod
Phone: +7-8162-55-7898
Fax: +7-8162-55-7921

Moscow
Phone: +7 495-585-1276
Fax: +7 495-585-1279

SAUDI ARABIA
Phone: +966-3-341-0278
Fax: +966-3-341-7624

SINGAPORE
Phone: +65-6861-6100
Fax: +65-6861-7172

SOUTH AFRICA
Phone: +27-11-452-1550
Fax: +27-11-452-6542

SOUTH & CENTRAL AMERICA AND THE CARIBBEAN
Phone: +55-12-2134-1201
Fax: +55-12-2134-1238

SPAIN
Phone: +34-93-652-6430
Fax: +34-93-652-6444

UNITED ARAB EMIRATES
Phone: +971-4-8991-777
Fax: +971-4-8991-778

UNITED KINGDOM
Bracknell
Phone: +1-1344-460-500
Fax: +1-1344-460-537

Skelmersdale
Phone: +1-1695-526-00
Fax: +1-1695-526-01

UNITED STATES
Massachusetts
Phone: +1-508-586-4600
Fax: +1-508-427-8971

Corpus Christi, Texas
Phone: +1-361-881-8182
Fax: +1-361-881-8246

Deer Park, Texas
Phone: +1-281-884-1000
Fax: +1-281-884-1010

Houston, Texas
Phone: +1-281-671-1640
Fax: +1-281-671-1735

Visit us online at:

www.geoilandgas.com/valves

* Denotes a trademark of General Electric Company.

Other company names and product names used in this document are registered trademarks or trade-marks of their respective owners.

© 2015 General Electric Company. All rights reserved.

GEA19557A 04/2015

INSTALLATION AND OPERATION MANUAL

ONE-PIECE FORGED METAL-SEATED POWER BALL VALVES

Sizes: NPS ½–4 (DN 15–100)
ASME Classes: 3100–4500

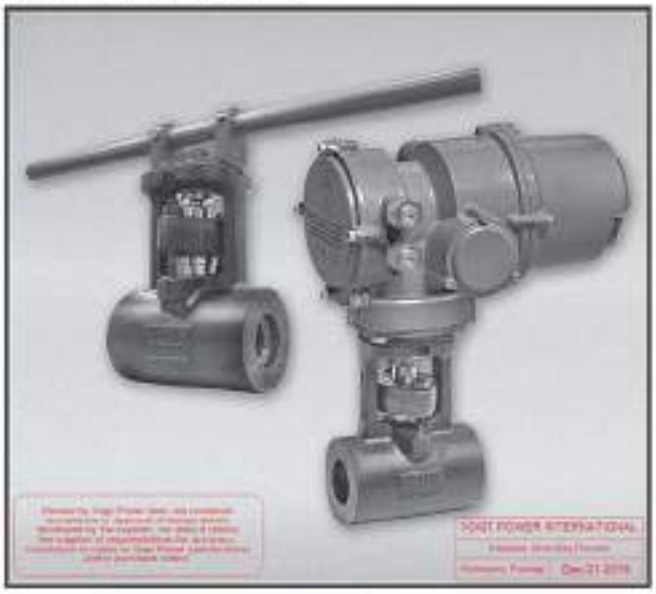

VOGT POWER INTERNATIONAL
V17491-P/XE-534-00
07-Dec-2016

VELAN

TABLE OF CONTENTS

I INTRODUCTION 3
1.1 General Introduction 3
1.2 Essentials Features Of Velan Power Ball Valves 4
1.3 Handle And Actuators 4
1.3.1 Handle 4
1.3.2 Gear Actuators 4
1.3.3 Air and Electric Actuators 5
II SAFETY WARNINGS 5
III RECEIVING & PREPARATION FOR INSTALLATION 6
3.1 Receiving Inspection 6
3.2 Quality Control Documentation 6
3.3 Storage 6
3.4 Unpacking, Handling & Inspection 6
IV INSTALLATION 7
4.1 General 7
4.1.1 Special Instructions For Weld End Valves 7
4.2 Procedure for In-Line Welding and Post Weld Heat Treatment (PWHT) 7
4.2.1 General 7
4.2.2 In-Line Welding 7
4.3 Local Post Weld Heat Treatment (PWHT) 8
4.3.1 Scope 8
4.3.2 Purpose 8
4.3.3 Procedure 8
4.3.3.1 During Post Welding Heating Treatment 8
4.3.3.2 Heated Band Width 9
4.3.3.3 Insulating Blankets 9
4.4 Installing Heating Blankets 9
4.4.1 Before Heat Treatment 9
4.4.2 Proper PWHT Installation 10
4.5 Post Weld Heat Treatment (PWHT) for Valves NPS ¼–2 (DN 8–50) 10
4.5.1 Recommendations 10
4.5.1.1 For Assembled Valves 10
4.6 Start-up Checks 10
V GENERAL MAINTENANCE 11
5.1 Troubleshooting Chart 11
5.2 Sources Of Operational Problems 11
5.2.1 External Problems 11
5.2.2 Smoothness Of Operation 11
5.3 General Operation 12
5.4 Recommended Lubrication 12
5.5 General Assembly Information 12
5.5.1 Packing Chamber Leakage 12
5.5.1.1 General 12
5.5.1.2 Packing Ring Removal 13
5.5.1.3 Replacing With Graphite Packing Rings 13
5.5.2 Seat Leakage 13
5.5.2.1 General 13
5.5.2.2 Seat and Ball Repair 13
VI DISASSEMBLY 14
6.1 Exploded Assembly of Power Ball Valve 14
6.2 General 15
6.3 Disassembly of Power Ball Valves 15
6.4 Cleaning and Pre-assembly 15
VII ASSEMBLY 16
7.1 General 16
7.2 Assembly Procedure 16
VIII PROCEDURE FOR REMOVING ACTUATOR 17
8.1 Gear Actuators 17
8.2 Pneumatic Actuators 17
8.3 Electric Actuators 17
IX SPARE PARTS 18

1.1 GENERAL INTRODUCTION

VELAN

This manual has been prepared by Velan engineers, designers and maintenance personnel to assist you in obtaining many years of satisfactory service from your Power Ball Metal-Seated Ball Valves. It will also assist you in any repairs that the valves may need over the course of their lives.

Velan Valve design and manufacturing incorporates many years of research and product development. We are constantly working to improve valve reliability and efficiency. Before installation and any major work, we recommend that you read this manual carefully to become familiar with our valves and service procedures.

If you do not understand a procedure in the manual or are experiencing a problem which is not described in the manual, please contact Velan Field Engineering Services or an authorized local Velan representative for technical assistance.

Before beginning any major work, we recommend that you carefully check the valve nameplate and record the valve figure number. This will ensure faster service when seeking technical valve assistance from Velan.

Thank you for choosing Velan.

1.2 ESSENTIALS FEATURES OF VELAN POWER BALL VALVES

The figure numbers shown on this key are designed to cover essential features of Velan valves. Please use figure numbers to ensure prompt and accurate processing of your order. A detailed description must accompany any special order.

HOW TO ORDER

Type of Connection	Size & Connection	Pressure rating	Port	Type	Body	Trim	Coatings	Special service
A	B	C	D	E	F	G H	I	J
W	3 5 —	C	2	G	0 2 —	A C	S	A

(example: Example order with NPS 4 (DN 25) class 3100 regular port pressure power ball A105 body, 316 HT trim, with and without HVOF chrome carbide coating, and standard service)

A	TYPE OF CONNECTION	
S	Butweld	S Flange NPT
C	Combination butweld with socket	W Flange weld
A	Socket butweld end	F Flange
T	Flange to ASME class 150	Z Butweld with socket end

B	SIZE OF CONNECTION
Customers handle should of operating valve size as part of the valve figure number. We shall the numbers below, or indicate valve size separately. Size shown in NPS (DN)	
EXAMPLE: NPS 3 (DN 80) HBS valve size is part of figure number NPS 3 (DN 80) HBS valve size is shown separately	
0 1/2 (15)	1 (25)	2 1/2 (65)
0 3/4 (20)	1 1/2 (40)	3 (80)
1 1/4 (32)	2 (50)	4 (100)

C	PRESSURE RATING	
4	2100	5 2500

D	PORT	
1	Reduced	2 Regular port

E	TYPE
G	Ball to trunnion

F	BODY MATERIAL	
W	316	8 F316 HT
6	CR 13 HT 110	9 F6

G	TRIM MATERIAL (ball/seat)	
A	316 HT	7 Stellite 6B

H	TRIM MATERIAL (stem)	
C	316 HT	A 316 HT

I	COATING	
S	Spray and pack chrome carbide	1 HVOF chrome carbide

J	SPECIAL SERVICE
A	Standard

Note: Oxygen valves and flange or butweld valves which contain lubricating oil as supplied by Dimensional Delta™, are other approved manufacturers.

Note: Valve values for NACE service are indicated by figure number and are designed to comply with the metallurgical requirements of the current NACE MR0175 and NACE TM 0177-2005. Material selection is dependent on the actual environment and it is therefore the responsibility of the end user to ensure that the material selected is suitable for the intended service. Please contact Velan for any questions regarding the application of our products for NACE service.

1.3 HANDLE AND ACTUATORS

1.3.1 Handle

The sliding handle allows for more flexibility to the Power Ball valve. The handle can either be used as a tee handle, or for drain leakage, slide the tee handle to the end of the handle yoke.

1.3.2 Gear Actuators

Velan worm gear actuators provide reliable and dependable manual operation for NPS 2½–4 (DN 65–100) regular port and NPS 2 (DN 50) full port Power Ball valves. The gear is designed to operate in the range of 90°, ±5° and is equipped with an angular dial indicator. Worm gear actuators feature a gear segment and a rigid, reversible shaft with integral worms. The gear actuators comply with ISO 5211 and are suitable for high temperatures service.

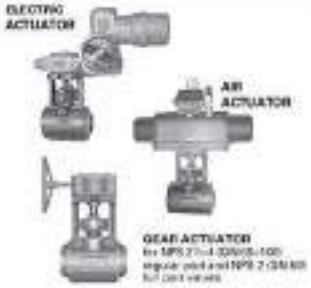

1.3.3 Air and electric Actuators

Velan supplies high quality pneumatic and electric actuators for NPS ½–4 (DN 15–100) Power Ball valves. All actuators are totally enclosed. External adjustment stops provide accurate adjustment for closing and opening positions. All moving parts are permanently lubricated. Actuators can be installed in the field, although it is preferable that they be installed and tested in the factory.

NOTE: Indicators on the stem and the packing gland should be used to align if the actuator is removed from installation. *See Figure 1.3*.

Figure 1.3: *Stem indicators in closed position.*

FOR SAFETY REASONS,

it is important to take these precautions before removing a valve from a line.

- Personnel making any adjustments on the valves should wear safety equipment normally used to work with the fluid in the line where the valve is installed.
- Before removing a valve from a line or re-packing a valve, line pressure must be relieved, with no exception.
- Velan is not responsible for automation carried out in the field and resulting consequences.

3.1 RECEIVING INSPECTION

All valves must be examined for signs of damage that may have occurred during transportation. Any damage should be analysed and a report should be issued. Serious damage should be reported the Velan Field Engineering Services Manager so that a suitable arrangement can be made for repairs. If possible, take digital pictures of the damaged area for the report.

3.2 QUALITY CONTROL DOCUMENTATION

For valves purchased with Quality Control (QC) certification, inspect the package of documents to see that the Quality Control certificates are complete as per the purchase order.

3.3 STORAGE

Valves should be stored in a suitably sheltered environment to prevent contamination by weather, dirt, or dampness. The valve is shipped with end protectors on the inlet and outlet, which should stay on the valve until it is ready for installation.

NOTE: For actuators, please refer to the applicable manufacturers instructions for storage.

3.4 UNPACKING, HANDLING & INSPECTION

Care should be taken when removing the valve from its container. Although the valve itself is very rugged, the actuator, controls and accessories, air supply tubing, etc., can be fragile, and therefore require extra care in handling.

WARNING: Do not use actuator lifting lugs to handle the valve/actuator assembly. The complete assembly must be handled using lifting straps placed underneath the valve arms, as shown in *Figure 3.4*.

Only store the valve in an area free from excessive exposure to dust, water, and mud. The valve should remain covered with protective end connection caps or taped coverage until it is ready for installation.

Verify the valve serial number against the packing slip. The valve serial number is located on the valve name plate and on the valve body. This unique identification number should be recorded and must be used when ordering spare parts. Proper identification will speed up service.

Prior to disposal of the shipping containers, check the container for any loose pieces i.e. spare parts, gaskets, etc.), which may have been shipped along with the valve. Contents of the shipping container should be verified against the Velan Packing Slip.

Prior to installation, inspect the valve thoroughly. Look for any loose or fitting connections, loose fasteners, bent air supply line, or any other visual signs of damage. Remove the protective covers from the valve end connections. Using a suitable solvent, wipe the valve end connections to insure that they are free from any debris or visible foreign matter. Recommended solvents are clean or re-distilled acetone, or alcohol. Do not use chloride or fluoride bearing solvents.

Flush the pipelines and clean before installing the valve. Debris allowed to remain in the pipeline such as weld spatters, welding rods, bricks, tools, etc. can damage the valve.

Installation of valves with NPS 3 inch and larger require a hoist to assist installation. A nylon sling should be placed in such a way that the unit can be lifted vertically in its final destination.

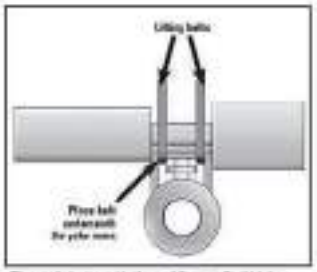

Figure 3.4: *Installation of Power Ball Valve*

4.1 GENERAL

The installation area should be checked for adequate clearance to allow for proper servicing of the valve. Obstructions can prevent removal of the actuator and/or complete disassembly of the valve as a unit. Although the valve is normally supplied for operation in a horizontal flow, with the stem vertical, it can be installed in any position.

NOTE: Any orientation other than with the stem vertical is a compromise and should be specified during order quotation process. If you are unsure of a certain installation orientation, please contact Velan Field Engineering Services before installation.

Open and close the valve to make sure that the ball position matches the actuator indicator. Adjust the stops, if necessary. Refer to the appropriate sections of the actuator manufacturer's manual.

Ensure that the pipe openings are well suited to the size and shape of the valve. Do not attempt to pull any piping to the valve by over-tightening the valve end connection/piping during installation.

NOTE: Check the valve project drawing and the piping layout drawing to ensure correct position and direction of flow. The Valve Flow Direction Arrow Label is forged on the valve body.

4.1.1 Special Instructions For Weld End Valves

NOTE: Welding instructions are provided by Velan for all purchased valves.

When installing a butt weld or socket weld end valve, ensure that the valve is in the open position (seen with fail closed actuators) and the inside bore of the valve body is coated with a suitable spatter guard.

Ensure that the valve is installed properly in the piping system. Minimize any external pipe loads on the valve. **Verify that the valve will be installed in the desired sealing direction.**

If you are using back up rings for butt weld end valves, ensure that they are of the consumable type. Always place the welding ground strap adjacent to the end being welded to prevent current flow through the valve.

Weld valve in line using qualified welder and appropriate procedures. Use pre-heat according to the valve material and procedure requirements, as stated in the welding instructions. The post weld heat treatment of the ball weld end valves and the socket weld end valves (if required per the welding instructions), must be localized. Take every precaution necessary to keep the minimal heat away from the main portion of the valve (seats and ball). Do not cover entire valve with stress relieving blankets. The temperature of the main body section should not exceed the rated valve temperature. *See Table 4.2 Welding Guidelines*.

After welding, verify that the packing gland bolts are tightened as per *Table 5.3 Packing Torque*. Cycle the valve several times (minimum 3 times) to ensure smooth operation and re-torque gland bolts as required.

4.2 PROCEDURE FOR IN-LINE WELDING AND POST WELD HEAT TREATMENT (PWHT)

4.2.1 General

Prior to in-line welding, check the valve material type, which is shown on the valve drawing and on the valve nameplate and ensure the waterway bore has been thoroughly cleaned from all particulate matter and check to ensure correct valve orientation.

4.2.2 In-Line Welding

During the welding process the valve should remain fully open. This is to avoid possible weld spatters and other particles from entering the body seat area. The pre-heat and inter pass temperatures shall be in accordance with the specific weld procedure to be used (please see Velan "Welding Guidelines" as reference.

4.2 WELDING GUIDELINES

MATERIAL GROUP			MINIMUM PREHEAT TEMPERATURE °F (°C)		MAXIMUM INTERPASS TEMPERATURE °F (°C)	SEMENS TEMPERATURE FOR PWHT TIME: 1 HOUR/INCH 2 MINUTES MINIMUM °F (°C)
Carbon Steels	P-No. 1	A105, WCB, JR, LCC, LCB, JT	T < 1.00"	50 (10)	Suitable for shell be considered when material and weld toughness is required	1150 ± 50 (620 ± 30)
			T > 1.00" (2.00")	175 (80)		
			T > 2.00"	250 (121)		
Low Alloy Steels (Chrome Moly)	P-No. 3	F, WC1, LC1	200 (93)		600 (316)	1150 ± 50 (620 ± 30)
	P-No. 4	F11, WC6, WC9, F11	300 (148)		600 (316)	1150 ± 50 (620 ± 30)
	P-No. 5A	F5, WC5, F5C	350 (176)		600 (316)	1300 ± 50 (704 ± 30)
	P-No. 5B Gr. 1	F9, F9 CL C11, F9, F9	500 (260)		600 (316)	1350 ± 50 (732 ± 30)
	P-No. 5B Gr. 2	F91, F91, C124	600 (316)		600 (316)	1400 ± 25 (760 ± 11) 2 hours minimum
Stainless Steels	P-No. 8	Series 300	50 (10)		350 (177)	
13 – 13	P-No. 6A	C5	250 (121)		500 (260)	1150 ± 50 (620 ± 30)
Nickel Alloys	P-No. 45	C12, C6	300 (148)		500 (260)	1150 ± 50 (620 ± 30)

NOTE: 1. *For preheating, ensure that the temperature reading is at least to a distance of 3 times the wall thickness.*

2. *The above guidelines are for recommendation purposes only. The actual welding procedure (WPS & POR) used* **must be qualified** *to ASME code Section IX.*

4.3 LOCAL POST WELD HEAT TREATMENT (PWHT)

4.3.1 Scope

The intent of this procedure is to specify the criteria to be employed in local post weld heat treating (PWHT) with electrical resistance devices of F1, F2, F5, F5A, F5B, F9, F9A and F9B valve components in accordance with the requirements of ASME/ANSI B16.34 and API 600.

The following documents have been taken into consideration in establishing the guidelines of this procedure.

A. API 600

B. ASME Section VIII and IX

C. ASME B31.3 and interpretation B31.93-024

D. ASME B31.1

E. Velan's ISO-9001 QC Program

F. VEL-P 6402.3

4.3.2 Purpose

PWHT is required whenever the welding procedure specifies the need for it. PWHT holding times and temperatures shall be as stated in *Table 4.4*.

4.3.3 Procedure

4.3.3.1 During Post Welding Heating Treating

During PWHT, the valve should be in the open position so that the metal temperature shall be maintained above the minimum temperature and for the minimum holding time.

4.3.3.2 Heated Band Width

The width of the heated band on each side of the greatest width of the finished weld shall not be less than two times the material thickness at the weld. Heating the circumferential joints of piping shall be over a band having a width on each side of the center line not less than three times the greatest width of the finished weld. The portion outside of the heated band shall be protected so that the temperature gradient is not harmful.

Circumferential welds - one thermocouple for diameters up to NPS 2 (DN 50), two thermocouples 180° apart for NPS 2½-6 (DN 65-150).

4.3.3.3 Insulating Blankets

Insulating blankets shall be securely attached around heating pads and thermocouples to ensure optimum heat retention and PWHT uniformity.

This will allow the best and most effective stress relieving in accordance with ASME B31.1, while protecting the ball and seat assembly from damage.

4.4 INSTALLING HEATING BLANKETS

4.4.1 Before Heat Treatment

WARNING: Do not insulate the centre section of the valves, indicated by the dotted outline, including the neck section of the vented ones.

4.4.2 Proper PWHT Installation

Install heating blankets, covered by proper insulation, as shown — no gaps/no overlaps. Heating blankets cover only weld joints. Blankets should not cover any part of the centre section of the valve body.

Table 4.4: PWHT Holding Times and Temperatures

MATERIAL	SERIES NO.		RECOMMENDED PWHT METAL		MINIMUM PREHEAT TEMPERATURE	MAXIMUM INTERPASS TEMPERATURE	POST WELD HEAT TREATMENT HOLDING TEMPERATURE / TIME
	PVQ	QL-NQ	CENTER ELECTRODE (MAIN)	SIDE BARS NQ (STAR)	°F (°C)	°F (°C)	°F (°C)
A105	1	2	[illegible]	[illegible]	[illegible]	[illegible]	[illegible]
F11	1L	1	[illegible]	[illegible]	[illegible]	[illegible]	[illegible]
F22	1M	1	[illegible]	[illegible]	[illegible]	[illegible]	[illegible]
F316	6	1	[illegible]	[illegible]	[illegible]	[illegible]	—

NOTES FOR WELDING:

1. [illegible]
2. [illegible]
3. [illegible]
4. [illegible]
5. [illegible]
6. [illegible]

NOTES FOR INSTALLATION AND OPERATION:

1. [illegible]
2. [illegible]
3. [illegible]
4. [illegible]
5. [illegible]

If using a "snake" (tubular coil heating element), make sure both ends of the valve are heated uniformly. An uninsulated loop in the middle will prevent proper heating. There are 4 possible solutions:

1. Insulate the loop only.
2. Use two separate snakes, one for each end.
3. Treat each end separately.

NOTE: Best results are obtained with wrap heating blankets, properly placed and insulated.

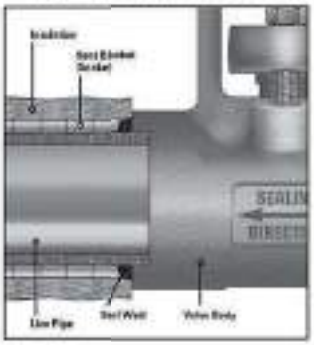

4.5 POST WELD HEAT TREATMENT (PWHT) - VALVES NPS ½-2 (DN 8-50)

4.5.1 Recommendations

The following recommendations are offered as they relate to the performance of post weld heat treatment on socket welded or butt welded valves during the installation stage.

NOTE: ASME B31.1 and B31.3, Section VIII as well as most other piping codes do not require PWHT for ASTM F316/316L. For A105, F11 & F22 PWHT is not required when thickness is less than ½".

4.5.1.1 For Assembled Valve

1. The valve should be in a fully open position.
2. Use only localized heating equipment.
3. Do not wrap or insulate total valve during PWHT.
4. Wrap the localized heating equipment around the welded joint and heat to the desired temperature for the desired length of time.
5. Furnace heating of the total valve assembly, as part of a piping subassembly, is completely unacceptable. As different part materials can be impacted by this requirement, the packing and internal components may be damaged or destroyed.

4.6 START-UP CHECKS

Valve stroke is set at the factory and should not need adjustment prior to start up. If the valve has a position indicator, check the calibration and tune to your system's sensitivity as required.

NOTE: Refer to the actuator manufacturer's Instruction and Maintenance Manuals for position indicator details.

Once the valve is installed successfully in the pipeline, cycle it several times (minimum 3 times) to ensure smooth operation.

5.1 TROUBLESHOOTING CHART

SYMPTOM	PROBLEM CAUSE	RECOMMENDED REMEDY	REFERENCE SECTION
Valve stem won't rotate	Actuator has failed	Repair or replace actuator as required	5.3
	Valve jacked with debris	Flush or drain valve to remove debris	
	Shaft key sheared	Replace shaft key, determine cause of shearing and correct	
Packing leak	Packing rings damaged	Replace packing rings	5.5.1
	Packing rings worn out	Replace packing rings	5.5.1
	Shaft damaged	Repair or replace stem (cycling out the valve is required)	5.3-7.1, 5.5
	Packing chamber damaged	Repair packing chamber	
	Insufficient packing flange torque	Tighten gland nuts to required torque values	5.5.1.3
	Gland bushing is binding	Loosen gland bolts, raise packing flange over top of gland bushing	
Valve seat leak	Damaged seat faces	Stack-height repair or replacement (cycling out the valve is required)	5.5.2
	Damaged ball	Stack-height repair or replacement	5.5.2
Operating/closing torque excessive	Packing too tight	Loosen packing to hand tight, re-torque	5.5.1.3
	Shaft is bent/warped	Replace shaft (cycling out the valve is required)	5.3-7.1, 5.5
Jerky operation	Actuator inlet adjuster misaligned	Remove actuator mounting and re-align	5.3
	Over-tightened packing	Loosen packing to hand tight	5.5.1.3
	For pneumatic actuator: Air supply instability	Increase air supply pressure	

NOTE: When reporting a problem to Valon, please have the following information ready:

- Valve serial number - found on identification label and stamped on body.
- Figure number and tag number, stem orientation.
- Process media - steam, oxygen, quench water, etc.
- Operating conditions - process temperature and pressure.
- Length of valve operation (number of cycles) prior to problem.
- Exact description of event.

5.2 SOURCES OF OPERATIONAL PROBLEMS

5.2.1 External Problems

Many external elements can affect a valve's overall performance. When a valve is malfunctioning, all possible external causes should be investigated prior to any valve disassembly. Here are some typical examples of root and sources of problems:

- No power supply to valve actuator
- Inadequate power supply to valve actuator
- Loose pneumatic fittings
- Improper calibration of position indicator
- Improper signal from the Controller to valve position indicator
- Improper valve stroke adjustment
- Over compression of valve packing
- Misalignment of mating components

5.2.2 Smoothness Of Operation

Here are some examples of the cause of increase in torque to turn the valve:

- Foreign debris depositing in packing area or behind seats
- Faulty or damaged valve parts
- Process coking up inside the valve
- Misalignment of mating components

5.3 GENERAL OPERATION

Valves should be inspected regularly, maintained during operation and serviced promptly when trouble arises. Valves that remain open or closed for long periods of time should be operated at least once a month (opened and closed minimum 3 times). If process does not allow complete open/closed cycling, try to cycle the valve partially (4 positions).

Test the torque of the gland bolts periodically (recommended every 6 months). If required, re-torque to the torque values in Table 5.5 following the bolt tightening sequence.

Check body and packing area periodically. If a minor leak is detected and deposits are found on the valve, clean the area using an air gun. As build up of process solids can aggravate problems. Any leakage should be monitored, documented and then visually investigated during shutdown periods.

5.4 RECOMMENDED LUBRICATION

PART	LUBRICATION	APPLICATION	FREQUENCY
All threaded parts	Nx 420-A (Crane) or equivalent	This coat on all threads	During valve assembly only
	Felpro Ipan CSA 94-temperature anti-seize compound		

5.5 GENERAL ASSEMBLY INFORMATION

1. It is important that all parts are cleaned and prepared before assembly. All rust and dirt should be removed with an emery cloth or a suitable solvent (or distilled acetone, alcohol). Be careful that the lapped surfaces do not get damaged.
2. All threaded parts (cap screws, studs, nuts, bolts) must be well lubricated. Recommended lubricants can be found in Table 5.4.
3. Verify that all replaced parts meet specifications and that all replacement parts (e.g. packing rings, etc.) match the engineering drawing and will fit into the valve.
4. All orientation marks assigned during disassembly must be observed so that correct orientation can be maintained during re-assembly.

5.5.1 Packing Chamber Leakage

5.5.1.1 General

All Valon Power-Ball valves require four packing rings: two braided graphite packing rings and two graphite rubber packing rings (see Figure 5.5).

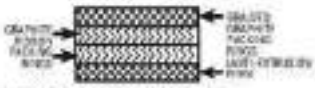

Figure 5.5: Packing Arrangement

If moisture or dripping from the packing chamber is noticed, the following points must be investigated before reinstalling the packing:

WARNING: Make sure that packing is not actively leaking prior to inspection. Media can cause severe damage and/or injury.

1. Check if the packing flange is torqued down to the correct torque values as per the Table 5.5.
2. Check if the gland bushing is binding against the packing chamber wall or stem. If so, relieve the line pressure. Loosen the packing flange and realign the gland bushing. Retighten the packing flange by hand, making sure that it is even on both sides of the stem, then torque to the correct torque values by following packing compression procedure.
3. After re-tightening, cycle the valve three to five times and re-tighten the nuts to original torque values as per the Table 5.5. Loosen the nuts slightly, if the torque value is too high.
4. If steps 1 to 3 do not stop packing leakage, proceed with the removal and replacement of the packing rings.

NOTE: Process residue can deteriorate valve components (i.e. corrosion of fasteners, and process build up in the area of live loading and packing chamber, etc.) and should be removed with an air gun during scheduled maintenance checks.

5.5.1.2 Packing Ring [illegible]

WARNING: Ma[illegible] relieved before [illegible] Failure to do s[illegible]

1. Remove the pa[illegible]
2. Lift packing fla[illegible] as possible and [illegible]
3. Remove old pa[illegible] removal tools. [illegible] which screw in[illegible] of the packing [illegible] consuming op[illegible] to scratch the [illegible] the packing ch[illegible]

5.5.1.3 Repacking [illegible] Using Con[illegible]

1. Before re-pack[illegible] of the stem, an[illegible] packing chamb[illegible] can be remove[illegible] a fine emery cl[illegible] center of the g[illegible] the stem by ta[illegible] hammer.
2. Insert the first [illegible] type (end ring) [illegible] packing chamb[illegible] graphite ribbo[illegible]

   NOTE: The spli[illegible] ring should be [illegible] apart.
3. Install the last [illegible] (end ring). Low[illegible] for positive en[illegible]

   NOTE: The gla[illegible] packing chamb[illegible] mately 1/8" (3 m[illegible]
4. Place the gland [illegible] into position b[illegible] required torque [illegible] *5.5.* Apply this [illegible] the total torque [illegible] gland bushing.

   NOTE: Ensure [illegible] lubricated with [illegible]

[illegible]

Table 5.5: *Packing Torque*

[illegible]	[illegible]	TORQUE			
		[illegible]		[illegible]	
		[illegible]	[illegible]	[illegible]	[illegible]
[illegible]	[illegible]	[illegible]	[illegible]	[illegible]	[illegible]

5.5.2 Seat Leakage

5.5.2.1 General

[illegible]

5.5.2.2 Seat and Ball Repair

[illegible]

6.1 EXPLODED ASSEMBLY OF POWER BALL VALVE

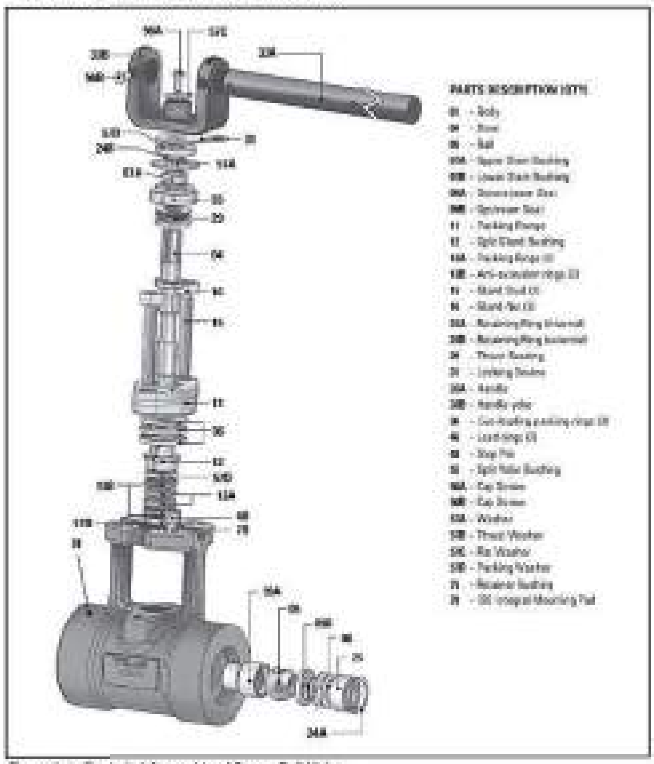

Figure 6.1: Exploded Assembly of Power Ball Valve

6.2 GENERAL

[illegible]

6.3 DISASSEMBLY OF POWER BALL VALVES

[illegible]

6.4 CLEANING AND PRE-ASSEMBLY

[illegible]

7.1 GENERAL

[illegible]ts are thoroughly cleaned and [illegible] assembly. All components should [illegible]ally for any defects or damage.

7.2 ASSEMBLY PROCEDURE

[illegible]ure refers to parts in exploded [illegible] in *Section 6.1*.

1. [illegible] downstream seat (09A) into the [illegible] seat A. Make sure that the seat is [illegible]ocation.
2. [illegible]am seat (09A) into the body. [illegible]d welding procedures.
3. [illegible]r stem bushing (07B).
4. [illegible]ing rings (13A & 13B) into the [illegible]er according to procedure in [illegible]
5. [illegible]oading packing rings (36) into [illegible]nge area. Make sure to insert [illegible]t they meet on their outside [illegible]
6. [illegible]ing flange (11) and the three live-[illegible] rings (36) between the yoke.
7. [illegible] (04) through the body (01), [illegible] (11), live-loading packing rings [illegible]g rings (13A & 13B). Verify that [illegible] is in front of the yoke arm. This is [illegible]-out of stem.
8. [illegible]t bearing (29). Make sure that [illegible] lubricated:

   a. [illegible]le the lower race (thicker).
   b. [illegible]le the needle bearing.
   c. [illegible]le the upper race (thinner).
9. [illegible] yoke bushing (55) on the top of [illegible]ring.
10. [illegible]eedle bearing and split bushing [illegible]bushing guiding.
11. [illegible]er stem bushing (07A).
12. [illegible]her (57A) on the top of the split [illegible] (55).
13. [illegible] external retainer ring (24B) on [illegible]ve and thrust washer (57B).
14. Lubricate the gland studs (15) with an anti-seize compound in *Table 5.4 Recommended Lubrication*. Tighten the studs into the body.
15. Lubricate the gland nuts (16) with an anti-seize compound as per *Table 5.4*. Following the bolting procedure in *Section 5.5.1.3* to tighten the nuts.

    CAUTION: Verify that the split gland bushing does not come in contact with the OD of the stem and ID of the split gland bushing. The packing flange must be horizontal.

    Verify that the shoulder of the split gland bushing (12) does not come in contact with the body.
16. Close the valve. Insert the ball (05).
17. Insert upstream seat (09B).
18. Verify that the load ring is flat and that its edges are sharp. Insert the load rings (46).
19. Insert the retainer bushing (75).
20. Insert the internal retainer ring (24A) into the specific groove.

If the valve is equipped with a handle yoke (33B)

a. Assemble the locking device (31).
b. Assemble the handle yoke (33B), flat washer (57C) and cap screw (56A).
c. Insert the handle (33A).
d. Tighten cap screw (56B).
e. Tighten the stop pin (48).

If the valve is equipped with an actuator

a. If required, assemble the insulator gasket.
b. Assemble the actuator.
c. Assemble the lock washer and the socket head cap screw.

8.1 GEAR ACTUATORS

Power Ball valves can be equipped with a variety of manual gear actuators. Use the following procedure to remove a gear actuator from a valve on line.

1. Remove all actuator bolting from the bottom of the yoke flange.
2. Using a hoist and nylon slings, raise the actuator off the coupling. If the connection between the stem and driver is keyed, ensure the security of the keys prior to disassembly. Do not to lose or drop keys. Note the orientation of the keyways in the driver.
3. To repair or service the actuator, refer to the manufacturer's instruction manual.

8.2 PNEUMATIC ACTUATORS

Power Ball valves can be equipped with a variety of pneumatic actuators. Use the following procedure to remove a pneumatic actuator from a valve on line.

1. Prior to disassembly, make sure that there is no air pressure in the pneumatic actuator.
2. Check if the actuator is supplied as Fail-Open or as Fail-Close. Make sure that the actuator has fully cycled to its fail position, meaning that the spring is not "loaded".

FAILURE TO DO SO
CAN RESULT IN SERIOUS INJURY!

3. Remove all actuator bolts from the underside of the yoke flange.
4. Using a hoist and nylon slings, raise the actuator off of the coupling. If the connection between the stem and driver is keyed, ensure the security of the keys prior to disassembly. Do not to lose or drop keys. Note the orientation of the keyways in the driver.
5. To repair or service the actuator, refer to the manufacturer's instruction manual.

8.3 ELECTRIC ACTUATORS

Power Ball valves can be equipped with a variety of electric actuators. Use the following procedure to remove an electric actuator from a valve on line.

1. Disconnect the electrical wiring from the actuator.

FAILURE TO DO SO
CAN RESULT IN SERIOUS INJURY!

2. Remove all actuator bolting from the bottom of the yoke flange.
3. Using a hoist and nylon slings, raise the actuator off of the coupling. If the connection between the stem and driver is keyed, ensure the security of the keys prior to disassembly. Do not to lose or drop keys. Note the orientation of the keyways in the driver.
4. To repair or service the actuator, refer to the manufacturer's instruction manual.

9.1 SPARE PARTS

Please contact Velan Field Engineering Services or an authorized local Velan representative to order any Power Ball Valve parts.

For faster service, clearly specify all part types and quantities required. Please have the following information available when ordering spare parts:

1. Velan order number. (P.O.)
2. Valve figure number/tag number
3. Velan item number (if more than one item).
4. Power Ball-Velan Project Drawing number.
5. Your order number and item number.
6. Valve size, type, pressure class, and serial number.

TERMS AND CONDITIONS OF SALE

CONTRACT: Orders are subject to acceptance by the Velan Companies hereinafter referred to as the seller. No terms or conditions of Purchaser's order contrary to the Seller's terms and condition shall be binding upon the Seller unless specifically agreed to by the Seller in writing.

MINIMUM ORDER CHARGE: $500.00 net.

PRICES: All quoted prices are subject to change by the seller without prior notice and, unless otherwise stipulated by Seller, are understood to be F.O.B. Seller's plant, with delivery to carrier constituting delivery to purchaser. Right to possession of the material to secure the payment of the purchase price shall remain in Seller until all payments therefore shall have been fully made. For the protection of the Purchaser and the Seller, verbal customer orders must be confirmed by a formal written purchase order. If a written purchase order is not received within ten days or a verbal order, product descriptions, quantities, specifications, etc., as set forth in Seller's acknowledgement and invoice shall be conclusive and binding on both parties. Any order that is shipped before receipt of confirmation which might have been entered incorrectly and would require corrective action would be for the Purchaser's account.

TAXES: All prices are exclusive of taxes. Sales, use and other taxes, by whomsoever levied, are to be paid by the Purchaser, and unless invoiced, are to be paid by the Purchaser directly to the appropriate governmental agents.

DELIVERY: Delivery or shipment specified is Seller's best estimate and Seller shall not be liable for delay in deliveries resulting from any cause whatsoever. Failure to ship on or near the estimated date shall not entitle Purchaser to cancel the order without charge.

RETURN OF MATERIALS: Materials may be returned only with prior written agreement of Seller.

CANCELLATION: Cancellation of orders may be made only with the Seller's written consent and Purchaser shall be subject to cancellation charges.

PRODUCT WARRANTY: Seller warrants the equipment of its own manufacture to be free of defects in material and workmanship, under normal use and proper operation for a period of one year from the date of shipment from Seller's plant. Seller's obligation under warranty shall be strictly limited, at Seller's option, to: (i) furnishing replacement parts for or repairing without charge to Purchaser, F.O.B. Seller's plant or (ii) issuing written authorization for Purchaser or others to replace or repair without charge to Purchaser, at costs comparable to Seller's normal manufacturing costs those parts proven defective, or (iii) in discharge of Seller's maximum liability herewith, refunding all monies paid by Purchaser to Seller for the Product and, at discretion of Seller, having the product removed and returned to Seller at Purchaser's expense. All transportation charges relative to corrective work, defective parts or replacement parts shall be borne by Purchaser. Purchaser shall give Seller immediate notice upon discovery of any defect. The undertaking of repairs or replacements by Purchaser or its agents without Seller's written consent shall relieve seller of all responsibility herewith.

Finished materials and accessories purchased from other manufacturers are warranted only to the extent of the manufacturer's warranty to Seller.

Any alteration in material or design of Seller's product or component parts thereof by Purchaser or others without written authorization by Seller voids all obligations of Seller regarding the product and any associated warranty herein stated or implied.

Seller's sole liability shall be exclusively as set forth herein, and Seller shall not be liable for any incidental or consequential damages due to its breach of any warranty herein contained, or otherwise. Without limitation to the foregoing, in no event shall Seller be liable for the loss of use of the product or of any other product, process, plant, equipment, or facilities of the Purchaser or end user whether partially or wholly due to defects in material and / or workmanship and / or design of Seller's product, and in no event shall Seller be liable for removal of appurtenances or incidentals such as connections, pipe work and similar items of obstruction or for any cost brought about by the necessity of removing the product from its point of installation.

Seller makes no warranty of any kind whatsoever, expressed or implied, other than is specifically stated herein, and there are no warranties of merchantability and/or fitness for a particular purpose which exceed the obligations and warranties specifically stated herein.

Parts furnished without charge as replacements for original parts under warranty are warranted for that period of time during which the original parts warranty is effective.

ALL SHIPMENTS WILL BE F.O.B. PLANT LOCATION. SHIPMENTS WILL BE MADE VIA MOST ECONOMICAL CARRIERS UNLESS OTHERWISE REQUESTED. TERMS: NET 30 DAYS FROM DATE OF INVOICE. 1½% PER MONTH OF ALL OVERDUE ACCOUNTS. ALL TAXES EXTRA. PRICES SUBJECT TO CHANGE WITHOUT NOTICE.

MANUFACTURING PROGRAM

Valve Product Line	Size		Pressure Class	Applicable Specifications
	NPS	DN		
Forged pressure seal and bolted bonnet gate, globe, and check valves	2 – 24	50 – 600	PS: ASME 600 – 4500 BB: ASME 150 – 1500	ASME B16.34
Small forged steel gate, globe, and check valves	¼ – 2	8 – 50	ASME 150 – 4500	API 602 ASME B16.34
Forged steel Y-pattern globe valves	½ – 4	15 – 100	ASME 600 – 4500	ASME B16.34
Cast steel gate, globe, and check valves	2 – 54	50 – 1350	ASME 150 – 1500	API 600
Cast stainless steel gate, globe, and check valves	¼ – 24	8 – 600	ASME 150 – 600	API 603 ASME B16.34
Dual plate check valves	2 – 48	50 – 1200	ASME 150 – 2500 API 6A, 2000 – 5000	API 594
All stainless steel knife gate valves	2 – 36	50 – 900	150 psig @ 100°F	TAPPI TIS 405-8 MSS SP-81
Memoryseal™ ball valves	¼ – 24	8 – 600	ASME 150 – 600 up to 2000 WOG	ASME B16.34
General purpose ball valves	¼ – 2	8 – 50	600 – 2000 WOG	Up to ASME B16.34
Metal seated ball valves	½ – 48	15 – 1200	ASME 150 – 4500	ASME B16.34
Triple offset valves	3 – 48	80 – 1200	ASME 150 – 600	API 609 ASME B16.34
Bellows seal gate and globe valves	½ – 12	15 – 300	ASME 150 – 2500	ASME B16.34
Cryogenic gate, globe, check, ball, and butterfly valves	¼ – 80	10 – 2000	ASME 150 – 1500	ASME B16.34

Headquartered in Montreal, Canada, Velan has several international subsidiaries. For general inquiries:

Velan head office:
Montreal, QC Canada

Check our website for more specific contact information.

www.velan.com

PRINTED IN CANADA

LONG TERM STORAGE OF SMALL VALVES

CARBON AND LOW ALLOY STEELS

VEL-QCI-411

VOGT POWER INTERNATIONAL
V17491-PVXE-508-00
07-Dec-2016

ISSUE DATE	CHANGES PARA/PAGES	DESCRIPTION	REVIEWED BY IND. REVIEW BY
Oct. 4'76	See Marginal Notes	Rev. 1	By: By:
Aug. 8'77	See Marginal Notes	Rev. 2	By: By:
Feb. 29'80	See Marginal Notes	Rev. 3	By: By:

SCOPE

To establish the packaging, inspection and maintenance required during storage to protect product integrity for a period of one year and up to five years, for valves 2" and smaller. (1)

1. CARBON AND LOW ALLOY STEEL

A. List of Materials

Plastic Bags:	Transparent heat sealable polyethylene bags 5 mils minimum.
Grease:	Lubriplate - Fiske Bros. Refining Co., Newark, N.J., U.S.A.
Inhibitor:	Water soluble "cromac" - Cromac Chemical Co., Montreal, Canada.
Tape:	Cloth Tape - Bonnington Tape of Canada Ontario, Canada.
Dessicant Bags:	"Moist-Sorb" (MIL-D-3464) - Silvaseen Dessicants, Gallup, New Mexico, U.S.A.

Size or quality as determined by dessicant supplies information.

Moisture Indicator:	Humidity cards, colour changing at Humidity of 30% or greater.

The above materials or equivalents shall be used to package and maintain carbon and low alloy steel valves during storage.

1. CARBON AND ALLOY STEEL (Cont'd)

B. Procedure - 0 to 1 Year

1. Loosen gland bolting and bushing and take the packing out of the packing chamber. Care should be taken not to damage the stem or wall of the packing chamber. (See instruction manual for method of removal.)

2. Ensure that the threaded portion of the stem is properly greased. If not, regrease threads with a light uniform film.

3. Remove the end covers of the valve, inspect the waterway to assure that it is dry and clean. Coat internal surfaces completely (waterway/wedge, etc.) with water soluble inhibitor and replace end caps.

4. Encase the entire valve in transparent plastic bag. Place the required size or number of dessicant bags inside the plastic bag, securely attached to the valve to prevent damage to the bag or valve. Attach the humidity indicator card to the plastic bag in a place convenient to be viewed from outside. Hold the plastic as closely as possible to the valve, to keep the air space to the minimum before sealing.

5. Not seal or seal the plastic bag with tape.

6. Store the valve in a heated or unheated covered environment. A heated environment shall be considered as being one maintained above 60°F. (1)

7. Every three months inspect humidity indicator card for sign of humidity. If indicator shows humidity in excess of 30% the end caps must be removed, valve reinspected and repackaged as described above.

One to Five Years

In addition to the above:

1. Annually the valve shall be unpacked, inspected, regreased and repackaged in accordance with paragraphs 1 to 7 above

(2) 2. VALVES WITH MOTOR OPERATORS

Storage Procedure

I. Primary Recommendation

A. One Year Maximum Duration

1. Store the units in a dry, heated building in such a position to keep the motor and handwheel in a horizontal plane and the limit switch compartment facing up.

B. One to Five Year Duration

1. Store the units in a dry, heated building in such a position to keep the motor and handwheel in a horizontal plane and the limit switch compartment facing up.

2. The units must be electrically exercised every six (6) months for a period of approximately five (5) minutes time.

3. The limit switch and torque switches must be sprayed with CRC #226 and Lectra Shield spray coating. This coating to be removed with a solvent such as Kerosene when units are to be readied for installation.

4. Seals and gasketed surfaces are to be sprayed with CRC #226 and Lectra Shield and removed with suitable solvent such as Kerosene when unit is to be made ready for installation.

II. Alternate Recommendation (Use only if above impractical)

A. One Year Maximum Duration

1. Store the units in an inside unheated controlled environment in such a position to keep the motor and handwheel in a horizontal plane and the limit switch compartment facing up.

2. Install a heat source of 25 watt capacity in the limit switch compartment of SMB-000 and SMB-00 units and of 50 watt capacity in the limit switch compartment of SMB-0 and larger.

3. Install a heat source of 25 watt capacity in motors up to and including a 210 size frame and of 50 watt capacity in motors over a 210 size.

B. One to Five Year Duration

1. Store the units in an inside unheated controlled environment in such a position to keep the motor and handwheel in a horizontal plane and the limit switch compartment facing up.

2. Install a heat source of 25 watt capacity in the limit switch compartment of SMB-000 and SMB-00 units and 50 watt capacity in the limit switch compartment of SMB-0 and larger.

3. Install a heat source of 25 watt capacity in motors up to a 210 frame size and of 50 watt capacity in motors over 210 frame size.

4. The units must be electrically exercised every six (6) months for a period of approximately five (5) minutes time.

5. The limit switches and torque switches must be sprayed with CRC #226 and Lectra Shield spray coatings. The coatings are to be removed with a solvent such as Kerosene when units are to be readied for installation.

6. Seals and gasketed surfaces are to be sprayed with CRC #226 and Lectra Shield and removed with suitable solvent such as Kerosene when unit is made ready for installation.

VOLTAGE	WATTS	RESISTANCE (ohms)
110/120	25	500
110/120	50	250
208/220	25	2100
208/220	50	1050
380	25	7200
380	50	3600
440	25	8500
440	50	4250
550	25	10000
550	50	5000

PENTAIR

Global Projects

Document Summary

11-Nov-2016

Page 1 of 7

Customer / End-User	VOGT Power International
Project Name:	V17491 - Amata ABPR5
Customer Purchase Order:	V0010363
Pentair Sales Order:	T367210
Pentair Document Number:	T367210-J01-001
Vogt Document Number:	-
Document Description:	Operation and Maintenance Manuals - Hancock
Drawing Number:	-
Revision:	0
Item No.:	20 - Erection/Installation drawings and/or manuals 21 - Operation and Maintenance Manuals, incl. Sub-Vendor Literature
Tag Number(s):	51LAB50AA001 51HAH50AA103 52LAB50AA001 52HAH50AA103 51LAB50AA001 51HAC50AA001 52LAB50AA001 52HAC50AA001 51HAH50AA002 51LAA30AA004 52HAH50AA002 52LAA30AA004 51HAH50AA001 51LAA30AA003 52HAH50AA001 52LAA30AA003 05LBG20AA006 05LAA30AA103

Notes:

VOGT POWER INTERNATIONAL
V17491-PVXE-509-00
11-Nov-2016

VOGT POWER INTERNATIONAL
Released: Stock Map Provided
Hammond, Pennsylvania | Nov-29-2016

PENTAIR

HANCOCK CAST STEEL – GATE, GLOBE AND CHECK VALVES

INSTALLATION, OPERATION AND MAINTENANCE INSTRUCTIONS

Before installation these instructions must be fully read and understood

Instructions for EN 161 ASME B16.5 – 150 (class 150, 300 and 600 pressure classes) cast steel valves

SAFETY NOTES

It is essential that a valve system should be adapted before any maintenance work is done on a valve. The following safety considerations should be taken into account when preparing maintenance instructions. Before removing valves from a pipework system or dismantling a valve to carry out maintenance, it will be necessary to gain, or partially open, the valves and to flush the system to remove all traces of dangerous fluids and precipitates.
It is important to recognise the danger associated with the release of the stem packing gland with pressure in the pipework system where the use of the maximum should not be regarded as a fail-proof sealing capability of the stem packing gland under the valve a pressure in this is a potential dangerous practice.

1 GENERAL INSTALLATION INSTRUCTIONS

1.1 General
The installation procedure is a critical stage in the life of a valve and care should be taken to avoid damaging the valve.

1.2 Inspection
Before carrying out any valve installation, it is important to determine whether the valve is in a satisfactory condition.
The following previously used valve procedure needs to be followed to avoiding subsequent valve problems and should be observed:
a) Carefully unpack the valve and check caps, identification plates, packing (loss of tension of consistency etc. against lack of material, specification, which varies etc.).
b) Make a point of noting any special marking tags or plates attached to or accompanying the valve and write any tags down in full.
c) Check the valve for any foreign matter using flow direction. If the flow direction is indicated, apply power, valve should be open back to invert the valve for proper flow direction.
d) As far as is practicable, inspect the valve internal through the end ports to determine whether it is reasonably clean from foreign matter and facilitate any loose. Remove any special packing materials such as blanks used to prevent and equipment during transport and handling, and any contact paper. Wipe clean from preservation coatings, particularly weldings.
e) Manually cycle the valve through open and close. Check spindle or seat holes etc.
f) Immediately prior to valve installation, check the pipework to which the valve is to be installed for cleanliness and freedom from foreign materials.

© 2013 Pentair plc. All Rights Reserved.

1.3 Flanged joint assembly
Plan flanged joint assembly and consider deformation of gasket material between the facing flanges in force for right sealing.
In order to obtain satisfactory flange joints the following points should be observed:
a) Check the mating flange for rust finish valve and gaskets. Flanged for correct gasket material face, surface finish and condition.
b) Check the facing for proper size, length, and material. A certain value limit or length temperature facing pressure result in space joint failure.
c) Check the gasket material. For flange joints using low strength bolting such as may be provided for mild flanges, metal gaskets flat, grooved, jacketed, corrugated spiral wound, ground metal, lined.
d) Check the gasket for freedom from defects or damage.
e) Take care to provide good alignment of the flanges being assembled. Use suitable tools and to avoid stresses. A satisfactory sequence for tightening to make the initial contact of flanges and gaskets as flat and parallel as possible. Tighten gradually and contacting to avoid the tendency to bend one flange relative to other.
f) Flexible alignment of flanges is especially important in the case of the presence of a valve in an existing system. It should be recognised in such instances that, if the flanges are not aligned, it will be necessary to allow for bending to make the flange joint tight. Simply forcing the flanges together with the facing may twist the pipe, or in the end of the valve.
g) All bolts shall be tightened in a star pattern as shown below to ensure uniform gasket loading.

1.4 Butt weld joint assembly
All welding should comply with the appropriate pipe system or application code. Welded joints properly made, provide a smooth bore and flexible joint continuity between the pipe and the valve body.
Butt weld ends are not parallel and are thickness of butt weld to that of the pipe.
If a pipe of high strength alloy is welded to a valve with body material of lower mechanical strength, the weld should taper to a compensating profile. Butt ends at the pipe end, or the valve should have a matching high strength welded on extension.

Flanges are not to be subjected when welding, nearby while the line. Considerable distortion resulting from stress, may occur if welds are not welded into the length, case, where check for the welding sequence is followed but it is necessary to ensure that such stress remaining does not result in valve components particularly the seatings being subjected to unacceptable temperatures.
It is recommended that the pipework not subjected to the pipework expansion of high heating or heavy, as this can adversely affect the sealing performance.

1.5 Testing and adjustment
Following installation, all valves should be operated to check that they are functioning correctly.
On new pipework systems, system pressure testing and commissioning follows after installation when various checks are made. Valves are usually supplied in the fully open condition, so it is recommended that a visual check, particularly after the application of heat to a welding operation.
A fine adjustment carried made by adjusting the valve through an open close or close-open cycle.
It is common practice after installation or subsequent systems, to check the system by filling with water or steam or flushing with a facility to remove debris and / or internal protective film or coatings. It should be recognised that valve seatings may form a natural trap in a pipework system and make up not adjustment or operation of the flushing fluid may settle in such cavities unsatisfactorily affect valve operation. Also, abrasive material carried by a high velocity fluid stream may cause serious damage to seating surfaces. Do not subject the valve to pressure/vacuum testing in excess of its rated limits.

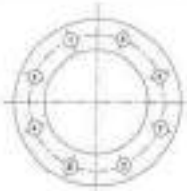

BOLT TIGHTENING SEQUENCE
1, 2, 3, 4, 5, 6, 7, 8

2 GATE VALVES

2.1 Installation and operation
2.1.1 Prior to installation
Valves not required for immediate use should be stored under clean conditions to reduce the risk of foreign matter entering the valve during unpacking. If the valves are unpacked for checking purposes, they should be re-packed or sealed until required for use.
Protection caps fitted to inlet and outlet connections must be removed just immediately prior to installation.
Flanging faces should be wiped clean with a dry cloth before connecting flange joints.

2.1.2 Installation
Valves are suitable for flow in either direction but they should be fitted in either horizontal position with the valve spindle in vertical close. When assembly can be the reverse to the proper opening of the wedge.
The valves should be installed in operation where the minimum stress is imparted to them. Both expansion and contraction of the pipe, and pipework should be adequately supported close to the valve to minimal mechanical pipe stress. For fitting valves into the pipeline, see General Installation Instructions (Section 1).
All valves will have been pressure tested or without lubrication before delivery, so it is recommended that gland packing nuts should be tightened after a short time or higher temperature service.

2.1.3 Operation
Rotation of the spindle/stem in the incorrect direction (see marking) will cause the valve to close, and vice versa. Blue of should be achieved by application of the handwheel torque only. Excessive application of force can result in failure of the thrust assembly or damage to the valve seating.

2.2 Maintenance

Wind Leakage

CAUTION
Do not use or attempt gland adjusting nuts to compress the packing rings.
If the does not correct the leakage or if the adjustment is fully used up, it will be necessary to repack the gland using a new set of the correct grade packing, or to attempt using liquid.

Re-packing glands
To gain access to the packing box, the gland adjusting nuts should be removed and the gland and packing flange removed or retracted along the stem as far as possible. When the stuffing box has been completely emptied of the original packing, it must be thoroughly cleaned before the new packing is introduced. It is recommended that the packing manufacturer's general instructions are followed when repacking glands.

General
It is recommended that the complete valve should be subjected to hydraulic testing in line before being considered in the working condition.

2.3 Spares
The further requirement for spare parts for normal wear in various are gland packing and gaskets.

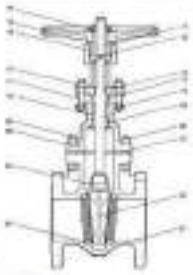

PARTS LIST

No.	Description
1	Body
2	Stem nut
3	Hinge pin
4	Stem
5	Shroud
6	Shroud nut
7	Gasket
8	Bonnet
9	Bonnet
10	Packing
11	Gland follower
12	Gland
13	Gland flange
14	Spacer nut
15	Cylinder nut
16	Gaiter
17	Stem nut
18	Hand wheel nut
19	Hand wheel
20	Hand wheel nut

3 GLOBE VALVES

3.1 Installation and operation
3.1.1 Prior to installation
Valves not required for immediate use should be stored under clean conditions to reduce the risk of foreign matter entering the valve during unpacking. If the valves are unpacked for checking purposes, they should be re-packed or sealed until required for use.
Protection caps fitted to inlet and outlet connections must be removed just immediately prior to installation.
Flanging faces should be wiped clean with a dry cloth before connecting flange joints.

3.1.2 Installation
Valves are suitable for flow in one direction only (as indicated on the body) and must be installed accordingly. They should be installed with the stem in either the upright or horizontal position. Other positions may be determined by the proper seating of the disc.
The valves should be installed in operation where minimum stress is imparted to them. Both expansion and contraction of the pipe, and pipework should be adequately supported close to the valve to minimal mechanical pipe stress. For valves which have been pressure tested or without lubrication before delivery, it is recommended that gland packing nuts should be tightened after a short time or higher temperature service.

3.1.3 Operation
Rotation of the spindle/stem in the incorrect direction (see marking) will cause the valve to close, and vice versa.
Excessive force application other than by the handwheel can result in failure of the thrust assembly or damage to the valve seating.

3.2 Maintenance
Routine maintenance
When the valve is working satisfactorily, the only requirement for routine maintenance is lubrication of the thrust assembly.

Valves are supplied with fully assembled body and bonnet and should give trouble-free service. If a leak is found in operation, the assembly should be replaced or repaired in the field.
Recommended grade of grease is Molykote 111 or equivalent.

Wind Leakage

CAUTION
Do not use or attempt gland adjusting nuts to compress the packing rings.
If the does not correct the leakage or if the adjustment is fully used up, it will be necessary to repack the gland using a new set of the correct grade packing, or to attempt using liquid.

Re-packing glands
To gain access to the packing box, the gland adjusting nuts should be removed and the gland and packing flange removed or retracted along the stem as far as possible. When the stuffing box has been completely emptied of the original packing, it must be thoroughly cleaned before the new packing is introduced. It is recommended that the packing manufacturer's general instructions are followed when repacking glands.

General
It is recommended that the complete valve should be subjected to hydraulic testing in line, before being considered in the working condition.

3.3 Spares
The further requirement for spare parts for normal wear in various are gland packing and gaskets.

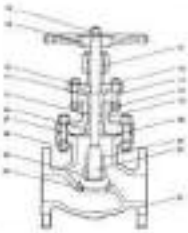

PARTS LIST

No.	Description
1	Body
2	Seat ring
3	Disc
4	Stem
5	Disc nut
6	Bonnet nut
7	Bonnet nut
8	Gasket
9	Bonnet
10	Packing
11	Gland follower
12	Gland
13	Gland flange
14	Spacer nut
15	Cylinder nut
16	Gaiter
17	Stem nut
18	Hand wheel
19	Hand wheel nut

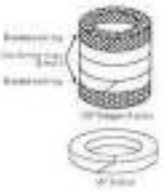

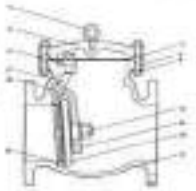

PENTAIR

PENTAIR VALVES & CONTROLS

INSTALLATION AND OPERATION MANUAL

FORGED BONNETLESS Y-PATTERN, INCLINED 45° BOLTED BONNET & WELDED BONNET GLOBE AND PISTON CHECK VALVES

Sizes: NPS ¼—4 (DN 8—100)

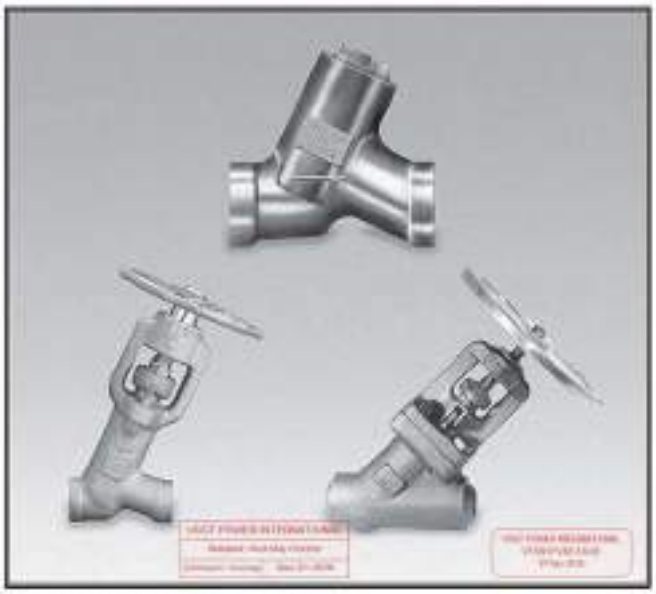

VELAN

TABLE OF CONTENTS

GENERAL INFORMATION — PAGE

I INTRODUCTION 4
1.1 General Introduction 4
1.2 Essential Features of Velan Valves 5
1.3 Detailed Body / Bonnet Styles 6

II RECEIVING & PREPARATION FOR INSTALLATION 7
2.1 Receiving Inspection 7
2.2 Storage 7
2.2.1 Welding valves in-line 7
2.2.2 Post weld heat treatment (PWHT) 7
2.3 Special instructions 9
2.4 Instructions for Check Valves 9

III WARNINGS 9

IV GENERAL MAINTENANCE 10
4.1 Operation 10
4.1.1 General 10
4.1.2 Smoothness of Operation 10
4.1.3 Seat Tightness and Closing Torques 10
4.2 Recommended Lubrication 10
4.3 Packing Chamber Leakage 11
4.4 Disc Refinishing 11
4.4.1 Angle for Disc Refinishing 11
4.5 Seat Refinishing 12
4.6 Seat Disc Lapping 12
4.7 Tools 13
4.7.1 Other Tools 14

V Y-PATTERN BONNETLESS GLOBE VALVE 15
5.1 Z Type Y-Pattern Bonnetless Globe Valve 15
5.2 Y Type Y-Pattern Bonnetless Globe Valve 16
5.3 Disassembly of Z Type 17
5.4 Reassembly of Z Type 18
5.5 Disassembly of Y Type 19
5.6 Reassembly of Y Type 20

VI GENERAL MAINTENANCE (BOLTED AND WELDED BONNET, GLOBE VALVES) 21
6.1 Operation 21
6.1.1 General 21
6.1.2 Smoothness of Operation 21
6.1.3 Seat Tightness and Closing Torques 21
6.2 Recommended Lubrication 21

VII Y-PATTERN 45° INCLINED BOLTED BONNET GLOBE VALVES 22
7.1 Disassembly 22
7.2 Seat Leakage 22
7.2.1 General 22
7.2.2 Seat Repairs, Globe Valves 22
7.2.3 Fixing or Repaired Parts, Globe Valves 22
7.2.4 Disc Repair 23
7.3 Reassembly of Globe Valve 23
7.3.1 General 23
7.3.2 Torque Procedure 23

TABLE OF CONTENTS

General Information	Page
7.3.3 Application of Torque	24
7.3.4 Replacement of Spiral Wound Gasket	24
7.3.5 Packing Torques	24
7.3.6 Packing Consolidation Method	24
VIII Y-Pattern 45° Inclined Welded Bonnet Globe Valves	25
8.1 Disassembly	25
8.2 Reassembly	25
IX Forged Steel Piston Check Valves For Horizontal And Vertical Lines	26
9.1 Disassembly Cover Removal	26
9.2 Seat Repair	26
9.3 Disc Repairs	26
9.4 Fitting of Replaced Parts: Piston Check Valves	26
9.5 Reassembly	26
Terms and Conditions of Sale	27

Figures	Number	Page
Automatic vacuum machine for grinding/lapping globe seats	7.2A	23
Bolt tighting sequence	7.2B	24
Detailed body/bonnet styles	1.3	3
Wrench for NPS ½, ¾ & 2 (DN 20, 40 & 50) Y-pattern valves stem disassembly	4.1D	14
Inclined Check Valves, Angle of incline and roll angle	3.4	8
Packing tool/ferrule	7.3A	25
Seat refinishing tool with interchangeable heads	4.1A	14
Standard globe disc and flow control needle disc	4.4B	11
Stem holder	4.1D	14
Stem lifting bushing	4.1B	14
Stem removal tool for NPS ½–¾ (DN 8–20) valves	4.1C	14
Stop check disc	4.4A	11
Torque wrench adapter	6.1B	14
Tube wrench / packing remover	6.1F	14
Using the seat refinishing tool	4.6	13
Using a socket wrench for seat disc lapping	4.6	13
Crescent wrench for removal of yoke bushing "V" and "E" styles	4.1H	14
Y-pattern Inclined Welded Cover Piston Check Valve	9.1A	26
Y type Y-pattern bonnetless globe valve	5.2	18
Z type Y-pattern bonnetless globe valve	5.1	18

Tables	Number	Page
Disc refinishing removal allowances	4.4	12
Packing flange nut torques for bolted and welded bonnet gate or globe valves (graphite ribbon or PTFE packing)	6.1.2	21
Recommended gland nut torques for graphite packing "Y-pattern"	6.1.2	18
Recommended lubrication	6.2	18
Recommended lubrication	6.2	21
Recommended spline bushing or bellows retainer torques	6.3	18
Torque values (100%) for body-bonnet bolting	7.0	24
Welding guidelines	2.2	7
Y-Pattern inclined bolted seat part numbers 1902/6 & 1902/8 all sizes seat all classes (2000, 4000)	4.7	13

1.1 GENERAL INTRODUCTION

VELAN

This maintenance manual has been prepared to help you obtain many more years of satisfactory service from your Y-pattern globe and check valves. It will also help you restore your valves to the best working condition with a minimum of time and expense.

Velan valves are designed and manufactured based on many years of research and are constantly being improved. Before beginning any major work, we recommend that you carefully read this booklet at least once to understand the valve's physical construction. If you do not understand the reason for the service problem, we suggest that you get in touch with your local Velan representative, or call the Velan Field Engineering Service Department at the Head Office for technical assistance.

Velan Y-Pattern Bonnetless Globe Valves are one-piece forged steel valves designed for high pressure-temperature service. The valves have guided Stellite discs. Stellite, a cobalt, chromium and tungsten alloy, has an average Brinell hardness of 400, and is generally accepted by the valve industry as an ideal handfacing material. However, the seat and disc are not absolutely safe from damage. If, for example, a particle of hard foreign matter becomes trapped between the seat and the disc and is then pressed into the seat in service, damage could occur.

1.2 ESSENTIAL FEATURES OF VELAN VALVES

Y-Pattern Globe Valves

Type of Connection	Size of Connection			Class	Body/Bonnet Type		Body Style			Trim Material		Material	
A	B			C	D		E			F		G	
W	0	5	–	8	0	7	6	Z	–	0	Z	T	S

e.g. on a NPS ½ (DN 20) socket weld A 150 bonnetless stop globe valve Z type 1000 class with T8 trim as described

A TYPE OF CONNECTION

A – Special B – Butt weld F – Flange S – Threaded W – Socket weld

B SIZE OF CONNECTION

Customers have the choice of specifying valve size as part of the valve figure number ("B" coding line numbers below), or indicating valve size separately. Sizes shown in NPS (DN).

EXAMPLES: NB-0016B-1206B (valve size is part of figure number)
MS-2 F-0016B-1.0MS (valve size is shown separately)

01 - 1/8	02 - 1/4	03 - 1/2	04 - 3/4	05 - 1	06 - 1 1/4
07 - 1 1/2	08 - 2	09 - 2 1/2	10 - 3	11 - 3 1/2	12 - 4

C CLASS

2 - 150 3 - 300 4 - 600 5 - 900 7 - 500 8 - 1500 9 - 2500

D TYPE

00 – Globe check 01 – Stop globe 06 – Stop check 05 – Needle

E BODY / BONNET STYLE

6E – Y-Pattern Bolted Seated (Non-Rotating Stem) 6W – Y-Pattern Welded Bonnet/Cover 6Y – Y-Pattern Bonnetless (Rotating Stem) 6Z – Y-Pattern 45° (Two-Piece Non-Rotating Stem)

F BODY MATERIAL

00 – Special 01 – A105 03 – Chromium alloy, F11
06 – Chrome moly, F22 10 – Stainless steel, F316 24 – F91

G TRIM MATERIAL

CODE	DISC SEATING SURFACE	SEAT SURFACE	STEM
AA	Special	Special	Special
T8	Stellite 6	Stellite 6	410 CU
MS	Stellite 6	Stellite 6	55 Stellite

1.3 DETAILED BODY / BONNET STYLES

Velan's range of Y-pattern valves include the following designs.

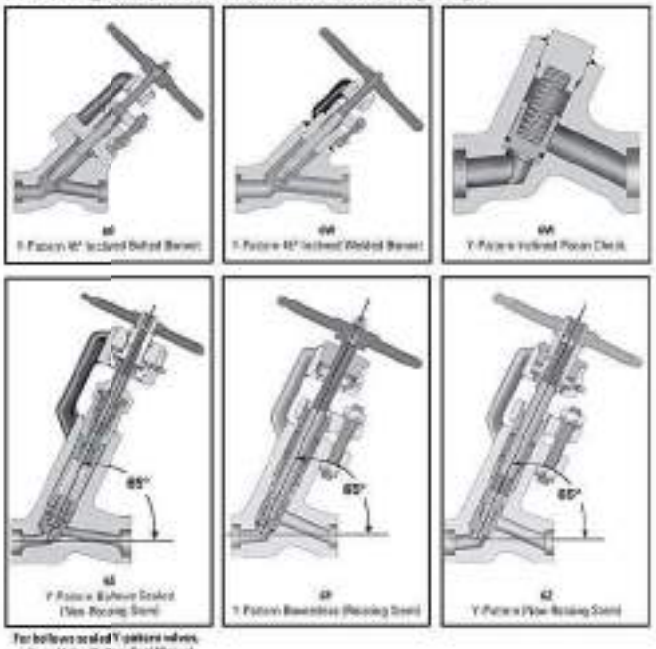

For bellows sealed Y-pattern valves, refer to Velan Bellow Seal Manual VEL-BSVM-200

2.1 RECEIVING INSPECTION

Valves must be examined to establish that no damage occurred during transportation. If any damage is found, make sure that it does not impair the operation of the valve. Serious damage should be reported to your local Velan representative or to the Velan Service Department at the Head Office so that arrangement for repairs can be made.

2.2 STORAGE

Valves can be stored at any temperature in a sheltered area but must be protected from contamination by dirt or the elements. The valve is shipped with end protectors on the inlet and outlet which should stay in place until the valve is ready to be installed. Before installation, remove the end protectors and check the connections for cleanliness. Visible foreign matter must be removed from end connections of weld end valves. The weld ends must be cleaned with a suitable solvent, such as acetone or alcohol. Do not use solvents containing fluoride or chloride.

2.2.1 Welding Valves In-line

Personnel performing in-line welding for socket weld and butt weld valves should use their in-house weld procedures. The interpass temperature should be monitored to not overheat the valve body that may cause seating deformation. The valve should be in a closed position during in-line welding.

2.2.2 Post Weld Heat Treatment

Valves requiring PWHT should be lightly backed off from closed position and given local PWHT to the welded area only.

Table 2.2 Welding guidelines

MATERIAL GROUP			MINIMUM PREHEAT TEMPERATURE °F (°C)		MAXIMUM INTERPASS TEMPERATURE °F (°C)	SOAKING TEMPERATURE FOR PWHT TIME 1 HOUR/INCH (15 MINUTES MINIMUM) °F (°C)
Carbon Steels	P-No. 1	A105, WCB, LF2, [illegible]	T ≤ 1.00"	50 (10)	Variable, but shall be controlled when material and weld toughness is required	1150 ± 50 (620 ± 30)
			T = 1.00-3.00"	175 (80)		
			T > 3.00"	350 (177)		
Low Alloy Steels (Chrome Moly)	P-No. 3	F1, WC1, [illegible]	200 (93)		600 (315)	1150 ± 50 (620 ± 30)
	P-No. 4	F11, WC6, WC6, F11	300 (149)		600 (315)	1150 ± 50 (620 ± 30)
	P-No. 5A	F22, WC9, F22	300 (150)		600 (315)	1300 ± 50 (705 ± 30)
	P-No. 5B Gr. 1	F5, F9, C5, C12, F5, F9	400 (205)		600 (315)	1350 ± 50 (730 ± 30)
	P-No. 5B Gr. 2	F91, F91, C12A	400 (205)		600 (315)	1400 ± 25 (760 ± 15) / 2 hours minimum
Stainless Steels	P-No. 8	Series 300	50 (10)		350 (175)	
1.5-3% Nickel Alloys	P-No. 9A	LC2	250 (121)		500 (260)	1150 ± 50 (620 ± 30)
	P-No. 9B	LC3, LF3	300 (150)		500 (260)	1140 ± 25 (615 ± 15)

NOTE 1. *For preheating, ensure that the temperature reading is at least to a distance of 2 times the wall thickness.*

2. *The above guidelines are for recommendation purposes only. The actual welding procedures (WPS & PQR) used* ***must be qualified*** *to ASME code Section IX.*

2.3 SPECIAL INSTRUCTIONS

Globe valves are usually installed with the inlet below the valve seat. For particularly severe throttling service, we recommend that the valve be installed so that the flow enters through the top of the seat and goes down through it. This maintains the valve in a more stable position, minimizes wear and reduces the potential noise level. Valve operation is also easier because less torque is required to close the valve. However, it is to be noted that packing rings would be subjected to line pressure in this orientation.

Globe valves should be installed and welded into the pipeline with the disc in the fully closed position to prevent damage to the valve during installation. Also, leaving the disc in the fully closed position helps prevent weld spatter from falling directly onto the mating faces of the seat and disc.

All Velan Y-Pattern Valves are tested in the factory for zero leakage on seat to the requirements of ASME B16.34. If any leakage occurs, it is because the seat has been deformed during welding on line, foreign contaminants have been lodged in the seat interface or the motor has become [illegible] in the field to overthrust and has damaged the disc/seat, or if set to under thrust, the valve would not close 100%, resulting in disc/seat mating surface to be wire drawn (steam cut). As a general rule, globe valves should be closed firmly when welding in-line and closed lightly when heat treatment is carried out. The preferred orientation of a globe valve is upright. The valve may be installed in other orientations, but any deviation from vertical is a compromise. Installation upside down is not recommended because of possible dirt build-up in the bonnet and backseat.

NOTE: All check valves should be installed at least ten pipe diameters away from upstream pumps, elbows, fittings or equipment and at least five pipe diameter from downstream elbow. If closer installation is required, please consult the Velan Customer Service Manager.

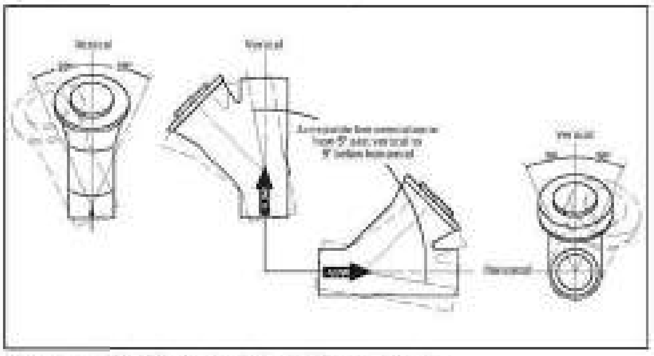

Figure 2.4 Inclined check valve: Angle of incline and roll angle.

NOTE: On insulation: the yoke must not be insulated as temperature build up in this area might cause possible damage to the upper works (e.g. motor actuator, gear actuator, etc.). It also blocks access to packing bolts inspection and retorquing.

WARNING: During installation, welding and construction stage, the valve mid section around the packing flange and stem should be protected at all times, as foreign debris from welding, grinding, etc., can fall in between the tapered area of the packing flange and stem, causing extensive damage to stem and associated parts during valve cycling. In any case, prior to cycling, the area between the stem, packing flange and gland bushing must be thoroughly cleaned off of all foreign matter.

2.4 INSTRUCTION FOR CHECK VALVES

All Velan inclined piston check and stop check valves, when installed in vertical or near vertical line, should have fluid flow upward and the angle of incline of the line not more than 5° past the vertical in the direction of the bonnet. When installed in horizontal or near horizontal lines, the valve bonnet should be up and the angle of incline of the line should not be more than 5° below the horizontal. See *Figure 2.4* for incline and roll angle allowable. Consult your Velan representative concerning installation other than that mentioned above.

All check valves must be installed with the inlet in direction of arrow. Placing a check valve in the opposite direction to flow will prevent normal operation of the valve.

WARNING FOR SAFETY REASONS, IT IS IMPORTANT TO TAKE THESE PRECAUTIONS. WARNING

- Personnel making any adjustments on the valves should wear safety equipment normally used to work with fluid in the line where the valve is installed.
- Before removing the yoke nut under pressure, the valve should be in fully open position in order to prevent injuries (backseat position).
- Before removing a valve from a line, line pressure must be relieved with no exception.
- Velan valves can be equipped with a variety of manual gear, electric motor, hydraulic or pneumatic actuators. Generally, all pressure must be relieved from both sides of the valve before the actuator is removed.
- A valve in the fully open position (backseated), should not be jammed-tight (over-torqued), to avoid thermal binding. It is our recommendation that the valve be removed ½ turn of the handwheel from the fully open position. This will also ensure that packing tightness is verifiable. In gear-operated valves, because of the backlash, it is difficult sometimes to ensure this position.
- Valve standards, such as API and MSS, caution users that successful completion of a backseat test should not be construed as a recommendation by the manufacturer that a valve may be repacked while it is under pressure. The backseat may be used as a means of stopping or reducing packing leakage until the packing can be replaced under no pressure. Removal of packing with the valve under pressure is at the owner's risk.
- Velan is not responsible for corrections carried out in the field and resulting consequences.

4.1 OPERATION

4.1.1 General

All valves should be checked before being put into operation and inspected regularly during operation. Problems should receive prompt attention. As a general rule, valves should be subjected to scheduled maintenance.

4.1.2 Smoothness of Operation

Stem threads, stem nut and other working components outside the fluid area should be lubricated frequently (at least once every six months). Specific lubricants and frequency of application are shown in *Table 4.2*. Valves should be opened and closed at least once a month.

IMPORTANT: Excessive handwheel effort can indicate the following:

a) Improperly lubricated or damaged valve stem.

b) Valve packing compression too tight (see Table 4.1.2 for torque values).

c) Faulty or damaged valve parts.

Table 4.1.2
Recommended gland nut torques for graphite packing rings "Y-pattern"

SIZE NPS	SIZE (DN)	CLASS	TORQUE lbf·ft	TORQUE (N·m)
½ - ¾	(15 - 20)	3000	23	(31)
½ - ¾	(8 - 15)	4500	48	(65)
1	(25)	3000	42	(57)
¾ - 1	(20 - 25)	4500	70	(95)
1¼ - 1½	(32 - 40)	3000	97	(130)
1¼	(32)	4500	85	(115)
2 - 4	(50 - 100)	3000	139	(188)
1½ - 2	(40 - 50)	4500	163	(221)
2½ - 4	(65 - 100)	4500	227	(308)

Note: *For other packing materials and/or valve sizes, contact the Velan Field Engineering Service Department at the Head Office.*

4.1.3 Seat Tightness and Closing Torques

Even a new valve with seating faces lapped to perfection and a full seat disc contact will be pressure-tight only if sufficient stem load is applied. The minimum stem load for each size of valve varies with operating pressure, but should be known by the operating personnel in order to seat the valve properly. Over torquing up to 20% will not damage the valve.

4.2 RECOMMENDED LUBRICATION

Table 4.2 Recommended lubrication

PART	LUBRICATION	APPLICATION	FREQUENCY
Stem threads	**Above 600°F:** Nuco Extra Duty 2	Brush on to threads	When threads appear dry
Yoke nut	**Above 600°F:** Nuco Extra Duty 2	Inject through grease fitting at [illegible] of yoke	Continuously with stem thread lubrication
Spiral bushing	[illegible]	Brush on to threads	At valve assembly
All threaded parts except stem and yoke nut	Anti-seize compound No. 425 A (Crane) or equivalent Nickel Anti-Seize to MIL-A-907E Nuclear grade nickel base "Never Seez" N-5000	Thin coat on threads	On valve assembly only

Recommended lubricant subject to change without notice.
For nuclear valves contact Velan Field Engineering Service Department.

4.3 PACKING CHAMBER LEAKAGE

If the valve is leaking around the stem and/or around the outside diameter of the split gland bushing in the back seated position, the valve needs to be disassembled and the stem and/or stellite backseat must be refinished or replaced.

If the valve is leaking around the stem and/or around the outside diameter of the split gland bushing in the partially open position, tighten the gland bolting. If this does not stop the leakage, proceed with Steps 1 through 3, as follows:

STEP 1
Release line pressure and remove handwheel assembly, packing flange. See *Disassembly Procedure* on pages 17 and 18 according to valve type.

STEP 2
Examine valve stem and packing chamber bore for grooves and scratches. Clean and smooth surfaces. Polish stems that may have scratches up to 0.005" (0.13 mm) deep with extra fine emery cloth. Otherwise replace stem.

STEP 3
Reinstall stem/disc assembly. Follow *Reassembly Procedures* on pages 18 and 20 according to valve type to complete repacking and to complete reassembly.

NOTE: Velan recommends use of precompressed packing rings.

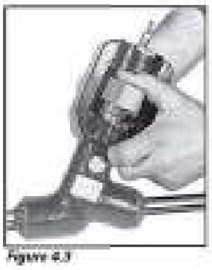
Figure 4.3

4.4 DISC REFINISHING

Minor damage can be repaired by machining the disc.

Clean the surfaces, then chuck the stem disc assembly in a lathe and center the disc on the circular guides. See the diagrams at right for disc refinishing angles. Do not remove more than the amounts shown in Table 4.4.

The disc is now ready for final lapping with seat (see pages 12 and 13).

NOTE: If the disc is severely damaged, it should be replaced.

4.4.1 Angle for Disc Refinishing

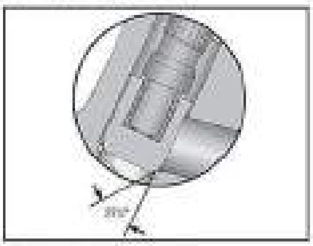

Figure 4.4A Stop check disc

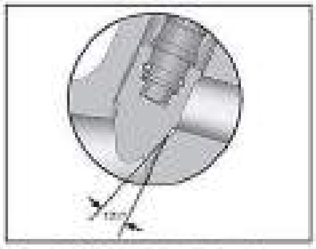

Figure 4.4B Standard globe disc and flow control needle disc

Table 4.4: *Disc and seat refinishing removal allowances*

VALVE SIZE NPS	(DN)	ALLOWANCES PER SIDE in	mm
¼–¾	(8–20)	0.008	(0.2)
1–4	(25–100)	0.028	(0.70)

4.5 SEAT REFINISHING

1. Disassemble valve (see pages 17 and 18). Select the proper head for the seat refinishing tool. Minor damage can be repaired with the lapping head, but use the cutting head first if there is severe damage. Remove the screw on the end of the tool with a small Allen key, position the cutting or lapping head and tighten the screw.

   NOTES:
   a) If valve is not in an upright position, use the yoke bushing to hold the tool in place.
   b) Angle for seat (stop check) refinishing 30°.
   c) Angle for seat (standard globe and needle valve) refinishing 10°.

2. Use an air or electric motor for cutting and lapping if you have one. Place the air or electric motor adapter on the end of the tool. If you don't have an air or electric drill gun motor, you can use a ratchet and socket wrench, but the repair will take longer.

   If you are using the cutting head
   Insert the seat refinishing tool into the valve bore. Rotate the tool for about 3 to 4 seconds using either a socket wrench or an air or electric drill gun while applying light pressure on the tool. Should the refinishing tool bind, reduce the pressure on the tool and try again. Remove the tool and inspect the seat area. Repeat if necessary. When all damage is removed use the lapping head. With abrasive paper 60 to 120 grit and finish lapping the seat with fine paper 320 grit or higher.

   CAUTION: Cutting head removes the seating surface very quickly. Therefore, when using either an air or electric drill gun, rotate the seat refinishing tool for less than 3 or 4 seconds at a time. Each time remove the tool and inspect the seat area.

   If you are using the lapping head
   Use abrasive paper 60 to 120 grit. In absence of abrasive paper, coat the lapping tool head with medium-coarse lapping compound. Insert the seat refinishing tool into the valve bore. Rotate the tool using either a socket wrench or an air or electric motor while applying light pressure on the tool.

   NOTE: After rotating for about 10 to 15 seconds, lift the tool several times up and down. This will distribute fresh compound on the seating surface and after about a minute of seat lapping, remove the tool and inspect the seat area. Repeat if necessary. When all visible damage is removed, clean off all coarse compound grit and finish lapping the seat with fine lapping compound. Seat lapping can also be done using abrasive paper with the lapping head, use coarse 60 to 120 grit to remove the damage and 320 grit or higher for the final finish. Lapping with abrasive paper makes a cleaner and faster finish.

Figure 4.5: *Using the seat refinishing tool*

3. Use a portable vacuum cleaner to remove loose chips. The valve is now ready for seat-disc lapping.

4.6 SEAT-DISC LAPPING

After seat refinishing or when a new or reconditioned disc is used, the disc and the seat should be lapped together to create a perfect seating contact. Seat-disc lapping can also be used to eliminate very minor seat and/or disc damage.

Use an air or electric drill motor for lapping if

you have one. Place the air or electric drill motor adapter on the end of the tool. If you don't have an air or electric motor, you can use a ratchet and socket wrench, but the repair will take longer.

1. The valve should be completely disassembled including the packing rings, backseat and spline bushing.

   NOTE: For Y type valves only, slip an O-ring over the end of the stem and into the groove between the disc and the stem to prevent the disc from rotating during lapping.

2. Apply a small amount of lapping compound to the disc contact face. Insert the stem in the body.

3. Insert one or two packing rings to center the stem for the lapping operation. Use the stem, without the backseat or other parts on it. Slip the packing rings over the stem and down into the body.

4. Rotate the stem with standard wrench or socket wrench, applying light pressure while lifting up and down often, to distribute fresh compound. Remove stem and check periodically. When the seating faces are perfectly smooth, clean them with acetone or equivalent. The valve is now ready for reassembly.

Figure 4.6: *Using of socket wrench for seat-disc lapping*

4.7 TOOLS

Y-Pattern Bonnetless Globe Valve Tool Kits are available for all valve types and sizes. Tool kit numbers as well as item numbers for individual tools are shown in *Table 4.7*.

Table 4.7 *Y-Pattern tool kits and tool part numbers TK576 and TK576 all sizes and all classes (2680, 4500). Sizes shown in NPS (DN).*

DESCRIPTION	QTY	[illegible]	[illegible]	[illegible]	[illegible]	[illegible]	[illegible]	[illegible]	[illegible]	[illegible]	[illegible]
		[illegible]	[illegible]	[illegible]	[illegible]	[illegible]	[illegible]	[illegible]	[illegible]	[illegible]	[illegible]
		[illegible]	[illegible]	[illegible]	[illegible]	[illegible]	[illegible]	[illegible]	[illegible]	[illegible]	[illegible]
Seat refinishing tool (Fig. 4.7A)	1	[illegible]	[illegible]	[illegible]	[illegible]	[illegible]	[illegible]	[illegible]	[illegible]	[illegible]	[illegible]
Lapping head (Fig. 4.7A)	1	[illegible]	[illegible]	[illegible]	[illegible]	[illegible]	[illegible]			[illegible]	
Cutting head (Fig. 4.7A)	1	[illegible]	—	[illegible]	[illegible]	[illegible]	[illegible]			[illegible]	
Stem lift bushing (Fig. 4.7B)		—			[illegible]		[illegible]			[illegible]	
Stem removal tool (Fig. 4.7C)	1	[illegible]			—		—			—	
Stem holder (Fig. 4.7D)	1	[illegible]			[illegible]		[illegible]			[illegible]	
Torque wrench adapter (Fig. 4.7E)	1	[illegible]			[illegible]		[illegible]			[illegible]	
Bar (Fig. 4.7F)	1	[illegible]			[illegible]		[illegible]			[illegible]	
Tube wrench/packing remover (Fig. 4.7F)	1	[illegible]			[illegible]		[illegible]			[illegible]	
Wrench for stem (Fig. 4.7G)	1	—			[illegible]		[illegible]			[illegible]	
Crescent wrench for yoke bushing "1" style (Fig. 4.7H)	1	[illegible]			[illegible]		[illegible]			[illegible]	
Crescent wrench for yoke bushing "2" style (Fig. 4.7H)	1	[illegible]			[illegible]		[illegible]			[illegible]	
[illegible]	3	[illegible]			[illegible]		[illegible]			[illegible]	
[illegible]	5	[illegible]			[illegible]		[illegible]			[illegible]	
[illegible]	1	[illegible]			[illegible]		[illegible]			[illegible]	

NOTE: (1) NPS 2 (DN 50) socket weld and NPS 2 (DN 50) butt weld are a one-piece body design.
(2) NPS 2½ (DN 65) socket weld and NPS 2½–4 (DN 65–100) butt weld are a two-piece body design.

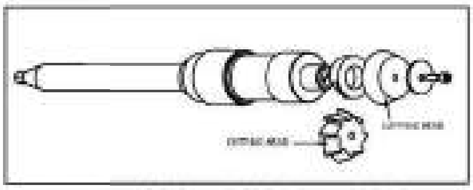

Figure 4.7A Seat refinishing tool with interchangeable heads

Figure 4.7B Stem lift bushing (Y-pattern MOV valves)

Figure 4.7C Stem removal tool for NPS ½–¾ valves

Figure 4.7D Stem holder

Figure 4.7E Torque wrench adapter

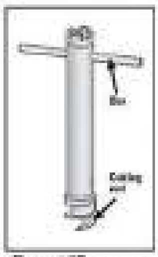

Figure 4.7F Tube wrench/packing remover with bar

Figure 4.7G Wrench for NPS 1, 1½ & 2 (DN 25, 40 & 50) Y-pattern valves stem removal tool.

Figure 4.7H Crescent wrench for removal of yoke bushing "1" & "2" styles.

4.7.1 Other Tools

Other tools and materials you should have ready before beginning repairs on these valves:

- Large screwdriver
- Hammer or mallet
- Torque wrench
- Set of Allen keys
- Acetone or equivalent (solvent) wrenches
- Coarse and fine lapping compound
- Lathe
- Flashlight
- Small telescopic mirror

5.1 Z TYPE Y-PATTERN BONNETLESS GLOBE VALVE

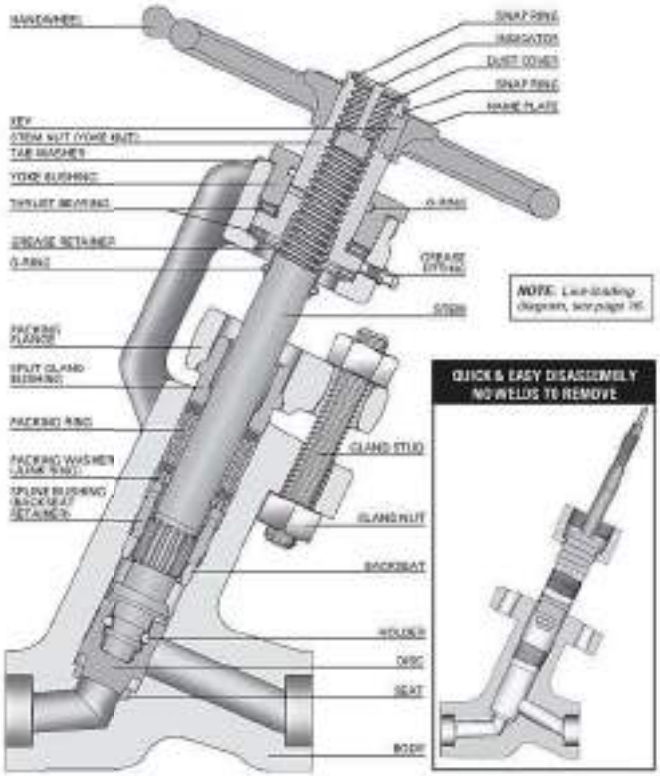

5.2 Y TYPE Y-PATTERN BONNETLESS GLOBE VALVE

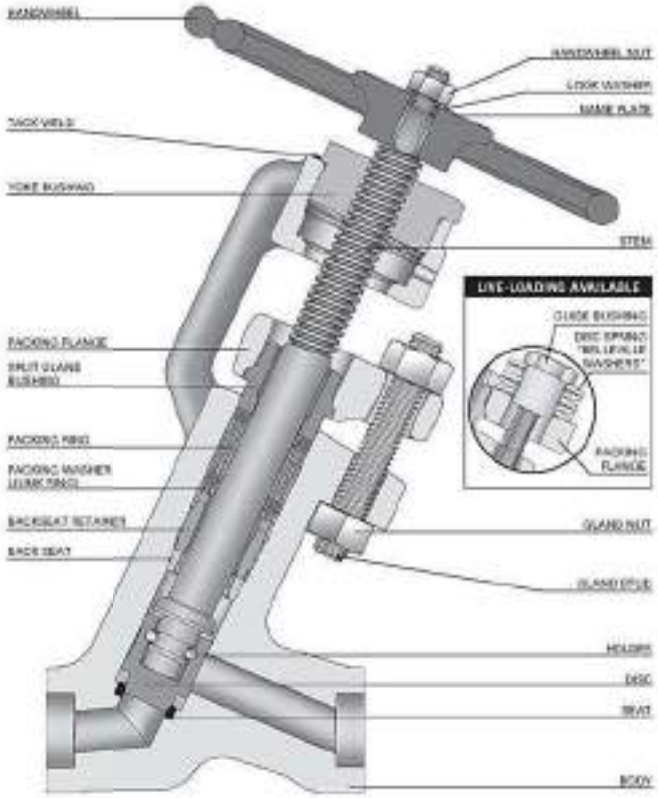

5.3 DISASSEMBLY — Z TYPE

IMPORTANT: Release line pressure.

1. Remove packing gland nuts and studs, loosening both sides equally. If valve is fitted with live loading, remove guide bushing and spring washers (Belleville washers). Raise packing flange and remove split gland bushing.
2. With the tip of a screwdriver, bend the square end of the tab washer up and the tunnel and down to free the yoke bushing.

Figure 5.3A

3. Make sure the valve is almost closed, but not tight on the seat. Use a constant wrench to unscrew the yoke bushing counterclockwise (with the handwheel still attached). Should the yoke bushing bind, close the valve a little. Continue to unscrew the yoke bushing counterclockwise.
4. Remove stem nut by turning clockwise then remove the handwheel.
5. Pop grease retainer (and push it up to force the thrust bearings and stem protector up and out of the body.
6. **For NPS 1—4 (DN 25—100) valves:** While the stem is in full open new backseated position, insert the square of the flat bar wrench in the square end of the stem. Turn counterclockwise until the spline bushing begins to move. **NOTE:** If turning reasonably free keep on unscrewing counterclockwise. If difficult to move, turn a few more turns back and forth and unscrew some more, dit this until it is free to turn. Grease fully.

Figure 5.3B

unscrewed lift the entire stem assembly with packing and disc out of the valve body. If difficulty is felt at use the stem lifting bushing, turn counter-clockwise until it is completely lifted and free to pull out. (If unable to unscrew the stem, see *Emergency Procedure*).

For NPS ½—½ (DN 8—20) valves: Screw stem removal tool on the end of the stem until it bottoms, then back off two turns. Use an adjustable wrench to tighten the hollow cap screw against the stem. Continue the same procedure as for NPS 1—4 (DN 25—100) valves.

Figure 5.3C

WARNING: Do not apply the full force of a wrench, on stem square.

EMERGENCY PROCEDURE:

If the stem absolutely refuses to unscrew using the torques specified, proceed as follows:

1. Place tube wrench/packing remover with the cutting edge first over stem and into the packing chamber.
2. Place guide bushing set into top of valve (slip split guide bushing onto tube wrench/packing remover, screw on retainer ring and hand tight).
3. Use the cutting end of the tube wrench/packing remover to remove packing.
4. Remove guide bushing set, pull up the tool and remove packing rings.
5. Use the packing washer hooks to fish out the packing washer under the packing.
6. Insert the removed end of the tube wrench/packing remover in valve body. Use a metal bar through the top holes of this tube wrench/packing remover to unscrew the spline bushing counter-clockwise.

NOTE: Valve recommends the use of tool kits listed on pages 13 and 14 for the best maintenance results.

Table 5.3: Recommended spline bushing or backseat retainer torques

SIZE NPS	(DN)	CLASS	TORQUES lb•ft	(N•m)
½–¾	(8–20)	2500	60	(80)
½–1	(8–15)	4500		
1	(25)	2500	120	(160)
1½–1½	(40–50)	4500		
1½–2	(32–40)	2500	140	(190)
1½–2	(40–50)	4500		
2–4	(50–100)	2500	180	(240)
2½–4	(65–100)	4500		

5.4 REASSEMBLY — Z TYPE

1. Slip backseat (into stem, chamfered edge down. Then slide spline bushing onto stem, rounded edge up.
2. Lubricate spline bushing threads (see Table 4.2 for Recommended Lubricants). Place packing flange under yoke, flat side up. Insert stem assembly through packing flange and into body.
3. Thread in spline bushing a few turns, then pull up firmly on stem with one hand while using an adjustable wrench to continue tightening the spline bushing clockwise against the backseat. If the spline bushing does not engage easily, insert removed end of the tube wrench/packing remover to engage spline bushing threads into the body.

Figure 5.4A

4. Insert the tube wrench/packing remover into the body over the stem, removed end down. Insert a metal bar through the holes in the tube wrench/packing remover and start to tighten the spline bushing. Then place torque wrench adapter into the tube wrench/packing remover. Align holes to insert a round bar through both parts. Use a torque wrench and continue to tighten until torque value shown in Table 5.3 is obtained.

NOTE: Valve recommends the use of the tool kits listed on pages 13 and 14 for the best maintenance results.

5. Insert packing washer, chamfered edge down. Then insert the set of precompressed packing rings one at a time, beginning and ending with the beveled rings.

NOTE: Valve recommends the use of precompressed packing rings.

6. Slip split gland bushing under packing flange, one half at a time, chamfered edge up. Lubricate gland studs with anti-seize compound, pass them through packing flange and thread on the gland nuts, tightening both sides equally (hand tight). For live-loaded valves, reinstall the disc springs and guide bushings onto the studs tightening both sides equally (hand tight).

Figure 5.4B

NOTE: The gland bushing should engage into the packing chamber by ¼" (6 mm) max.

7. Place grease retainer inside yoke and push down over stem with the removed end of the tube wrench/packing remover. Drop in one set of thrust bearings (washer - bearing - washer).

If backseated, stem nut, and yoke bushing are disassembled:

Install upper thrust bearing (washer/bearing/washer) on stem nut. Lightly grease yoke bushing over bearing (threaded side down towards bearing). Install key and handwheel with nameplate. Secure with snap ring to hold handwheel to stem nut.

Figure 5.4C

If Handwheel, Stem Nut and Yoke Bushing are Assembled

Set tab washer in place on yoke. Lubricate yoke and stem threads (refer to *Table 4.2*). Screw counterclockwise the handwheel assembly onto stem about half way. Then begin tightening yoke bushing clockwise into top of valve. Should the yoke bushing bind, it's because the stem has pushed the disc against the seat. Correct this by backing off the handwheel slightly and continue tightening by hand. Finish tightening with a large crescent wrench, holding tab washer in position against flat spot on yoke. Press square tab down with tip of screwdriver. On the opposite side, press rounded edge up against yoke bushing.

8. Continue tightening packing nuts or guide bushing for live-loaded valves with a crescent wrench. Install the crescent key on the torque wrench and finish tightening the nuts to the torques shown in *Table 4.1.2* and refer to *Section VII, 7.2.6 Packing Consolidation Method* follow steps 1 through 4, except use *Table 4.1.2* for packing value.

5.5 DISASSEMBLY — Y TYPE

IMPORTANT: Release line pressure.

1. Remove handwheel nut and handwheel.
2. Remove packing gland nuts and studs, loosening both sides equally. If valve is fitted with live loading, remove guide bushing and spring washers (Belleville washers). Raise packing flange and remove split gland bushing.
3. Grind off tack weld between yoke bushing and yoke.
4. Make sure the valve is almost closed, but not tight on the seat. Use a crescent wrench to unscrew the yoke bushing counterclockwise. Should the yoke bushing bind, put handwheel on stem and close the valve a little. Continue to unscrew the yoke bushing counter-clockwise. Remove handwheel and yoke bushing.
5. Place tube wrench/packing remover with the cutting edge first over stem and into the packing chamber. Place guide bushing set into top of valve (put in split guide bushing, screw in retainer ring and hand tight). Insert a metal bar through the holes in the tube wrench/packing remover, turn in a clockwise direction while pushing bar down. This will pick up the packing rings within the spiral flutes of the tube wrench/packing remover. Pull up the tool and remove packing rings within the spiral flutes. Re-insert tool to remove any remaining packing rings. After complete removal of packing, remove guide bushing set, and tube wrench/packing remover. Using two packing washer hooks, insert them into the packing washer holes and pull it up over the stem.
6. Insert the crowned end of the tube wrench/packing remover in valve body. Use a metal bar through the top holes of the tube wrench/packing remover to unscrew the backseat retainer counterclockwise. Remove stem disc assembly. The valve is now ready for servicing.

5.6 REASSEMBLY — Y TYPE

1. Slip backseat onto stem, chamfered edge down. Lubricate backseat retainer threads (see *Table 4.2*). Then slide backseat retainer onto stem, crowned edge up.
2. Place packing flange under yoke, flat side up. Insert stem assembly through packing flange and into body.
3. Thread in backseat retainer, use the crowned end of the tube wrench/packing remover to tighten the backseat retainer clockwise against the backseat.
4. Then place torque wrench adaptor into the tube wrench/packing remover. Align holes to insert a round bar through both parts. Use a torque wrench and continue to tighten until torque value shown in Table 5.2 is obtained.

   NOTE: Velan recommends the use of the tool kits listed on pages 13 and 14 for the best maintenance results.

5. Insert packing washer, chamfered edge down. Then insert the set of precompressed packing rings one at a time, beginning and ending with the braided rings. Use the crowned end of the tube wrench/packing remover to tap the rings into place.

   NOTE: If uncompressed packing is used follow *Packing Consolidation Method* (refer to *Section 7.2, paragraph 7.2.6*). Except for packing torque, use *Table 4.1.2*.

6. Slip split gland bushing under packing flange, one half at a time, chamfered edge up. Lubricate gland studs with anti-seize compound, pass them through packing flange and thread on the gland nuts, tightening both sides equally (hand tight). For live loaded valves reinstall the disc springs and guide bushings onto the studs tightening both sides equally (hand tight).

   NOTE: The gland bushing should engage into the body by ⅛" (3 mm) min.

7. Screw on yoke bushing clockwise, using a large crescent wrench. Should the yoke bushing bind, it's because the stem has bottomed on the seat. Correct this by backing off the handwheel slightly. Secure yoke bushing to yoke with tack weld.
8. Continue tightening packing nuts or guide bushing for live-loaded valves with a crescent wrench. Install the crescent key on the torque wrench and finish tightening the nuts to the torques shown in *Table 4.1.2*.

6.1 OPERATION

6.1.1 General

All valves should be checked before being put into operation and should be inspected regularly during operation. Prompt attention should be paid when trouble arises. As a general rule, valves should be subjected to scheduled maintenance.

6.1.2 Smoothness of Operation

Stem threads, stem nuts and other working components outside the fluid area should be lubricated frequently (at least once every six months). Specific lubricants and frequency of application are shown in *Table 6.2*.

IMPORTANT: Excessive handwheel effort can indicate the following:

1. Improperly lubricated or damaged valve stem.
2. Valve packing compression too tight (see *Table 6.1.2* for torques).
3. Faulty or damaged valve parts.

6.1.3 Seat Tightness and Closing Torques

Even a new valve with seating faces lapped to perfection and a full seat-wedge or disc contact will be pressure tight only if sufficient stem load is applied. The minimum stem load for each size of valve varies with operating pressure in order to seat the valve properly. Slight over-torquing will not damage the valve.

CAUTION
Do not use "cheaters" on the handwheel.

Table 6.1.2 Packing flange nut torques for bolted and welded bonnet gate or globe valves (graphite ribbon or PTFE packing)

SIZE NPS	SIZE (DN)	CLASS	STUD SIZE	GATE VALVES TORQUE ft•lb	GATE VALVES TORQUE (N•m)	GLOBE VALVES TORQUE ft•lb	GLOBE VALVES TORQUE (N•m)
½–¾	(8–15)	150–800	⅜–20UNC	24	(32.5)	24	(32.1)
½–¾	(8–20)	900–1500	⅜–16UNC	40	(5.0)	50	(16.3)
¾–1	(20–25)	150–800	7/16–16UNC	40	(4.5)	50	(5.0)
1	(25)	900–1500	7/16–14UNC	100	(11.3)	100	(14.1)
1¼–1½	(32–40)	150–800	½–16UNC	80	(8.0)	80	(9.0)
1¼–2	(32–50)	900–1500	7/16–14UNC	140	(16.4)	100	(14.1)
2	(50)	150–800	½–16UNC	80	(9.6)	90	(10.2)

Note: *For other sizes and packing materials, contact the manufacturer.*

6.2 RECOMMENDED LUBRICATION

Table 6.2 *Recommended lubrication*

PART	LUBRICATION	APPLICATION	FREQUENCY
Stem threads	**Up to 650°F:** Exxon Mobile Nemo VP, Castrol VP or equivalent VP group **Above 650°F:** Nemo Extra Duty 2	Directly to threads	When threads appear dry
Yoke nut	**Up to 650°F:** Exxon Mobile Nemo VP, Castrol VP or equivalent VP group **Above 650°F:** Nemo Extra Duty 2	Inject through grease fitting at hub of yoke	Continuously with stem thread lubrication
Gasket seating	Sure Turn No. 154884	Directly to threads	At valve assembly
All threaded parts except stem and yoke nut	Anti-seize compound No. 425-A (Crane) or equivalent Nickel Anti-Seize or MIL-A-907E, MOLYKOTE P-37, Nuclear grade nickle base "Never-Seez N-5000"	Thin coat on threads	On valve assembly only

Recommended lubricant subject to change without notice.

7.1 DISASSEMBLY

1. Ensure the line has been depressurized. Place match mark on the bonnet and body.
2. Open the valve partially and remove the handwheel nut and the handwheel.
3. Remove the body-bonnet gasket bolts and lift out the complete bonnet assembly. At this point remove the yoke bushing tack welds and unscrew the yoke bushing counterclockwise.
4. Remove the gland bolts and pull out the stem out of the bonnet and remove the packing out of the packing chamber.

   The valve is now ready for parts replacement and/or repair.

7.2 SEAT LEAKAGE

7.2.1 General

An indication that valve leakage exists after a valve has been properly closed may be found by observing the pressure loss in the line on the high pressure side of the valve. In the case of hot water or steam lines, note whether the downstream pipe remains hot beyond the usual length of time. This type of leak may be the result of a distorted seat, caused by improper welding of the valve into the pipeline, or by stress-relieving temperatures that may have been used during installation.

Leaks can also be caused by failure to close the valve tightly, resulting in high velocity flow through a small opening. In spite of the fact that the hardfacing material (Stellite) is corrosion- and erosion-resistant, grooves, pit marks or other surface irregularities may still form on the mating faces. Valves which leak should be repaired as soon as possible to prevent greater damage caused by high velocity flow.

7.2.2 Seat Repairs: Globe Valves

1. Disassemble the valve as described in *Disassembly of Globe Valves, Section 7.1*, and inspect the disc and seat for scratches, pitting marks or other damage.
2. If there are deep pitting marks, use a cast iron lapping disc with seat angle of 10° and a suitable lapping compound to roughen the surface first. With the use of a new, or already refinished original disc, you can use a finer lapping compound to finish lapping the disc and seat together.
3. a) Use a guiding plate for the stem to maintain alignment during the lapping operation. It can be made from wood or any other suitable material to the dimensions of the gasket and the bonnet spigot. The section of the plate where the stem extends through must be ⅛" (3.0 mm) larger than the outside diameter of the stem.

   b) If the valve has a soft seated disc, all body lapping must be done with a lapping disc and not with a soft seated disc.

4. Evenly distribute a small quantity of lapping compound mixed with olive oil on the two mating surfaces.
5. It is important to apply only light, even pressure when lapping seats and to rotate reciprocally. For best results, use an air or electric hand tool with adjustable speed and reciprocal movement. The lapping tool should be lifted frequently and turned to a new starting position.
6. Automatic grinding and lapping of seat faces can be done by specialized equipment which can save considerable time, refer to *Figure 7.2A*. For major damages the use of 60 or 90 grit diamond or Mirron alumina abrasive discs is suggested. For minor damage use 120 to 180 grit. For finishing use 220 grit and higher can be used. For further details contact the Velan Field Engineering Service Department.

7.2.3 Fitting of Repaired Parts: Globe Valves

1. After the seating faces of the disc and seat have been relapped and cleaned with a suitable cleaning fluid, such as acetone or alcohol, the results of the lapping must be verified by a bluing test to check for full circumferential contact. A bluing ink should be distributed smoothly and equally over the seating diameter of the disc. Slowly lower the part into the body and find the correct mating point of the faces.
2. When fitting the disc, it is important that the inside diameter of the body be checked for sufficient clearance to allow the disc to move freely up and down. A visual examination of the body wall is recommended. Any grooves or scratches should be polished with a fine emery cloth. It is also important to verify that the disc cannot be forced sideways against the outlet side of the waterway bore and become jammed in that position.

NOTE: A quick test is to take the stem-disc assembly and check if the disc can be rocked. The rocking will allow the disc to self-align to the seat.

Figure 7.24 Automatic reseater machine for grinding / lapping globe seats

7.2.4 Disc Repair

A. Disc seating damage no greater than 0.005" (0.13 mm) can be removed by lapping with body seat, use 60 grit lapping compound to remove damage, followed by fine lapping 220 grit and up for finishing.

B. Damages greater than 0.005" (0.13 mm) up to 0.060" (1.5 mm) should be machined followed by fine lapping (refer to Section 4.4).

NOTE: Disc and stem versions as a unit should stem or disc replacement become necessary, it must be replaced as a unit.

7.3 REASSEMBLY OF GLOBE VALVES

7.3.1 General

The reassembly procedures are not as detailed as the disassembly procedures since in most cases the reverse procedure is required.

1. The most important consideration is the cleanliness of all parts. Rust and dirt should be removed from all parts with a wire brush or emery cloth. Oil and grease should be removed with suitable solvents.
2. Threaded parts (cap screws, nuts, studs) must be well relubricated. Old grease should be removed from the stem and stem nut threads before a new coat of grease is applied. Recommended lubricants can be found in Table 4.2.

   NOTE: Use correct lubricant for each individual part.

3. Repaired or replaced parts must be checked to make sure that repair procedures have been done and that replaced parts (e.g., packing rings, spiral gasket, etc.) have been checked for size so that they will fit into the valve you are servicing.
4. All orientation marks scrapped during disassembly must be observed so that correct assembly is maintained.

7.3.2 Torque Procedure

1. Clean all studs and nuts and inspect all threads to ensure removal of all foreign matter, rust, corrosion, burrs and previous lubricant.
2. Liberally cover the cap screw (stud) threads and surface under the nut head with anti-seize compound FEL PRO C5-A or approved equivalent. Also lubricate the female threads of the nuts. Wipe off, with approved solvent, any excess lubricant that may adhere to the steel parts. Approved solvents for this work are acetone, alcohol or Freon PCA.

   NOTE: The use of other solvents is not recommended.

3. With bolts hand-tight, follow the bolt tightening sequence shown in Figure 7.28. The sequence depends upon the number of bolts employed and the sketch shows only one possible tightening sequence. The bolts must be torqued to the recommended values shown in Table 7.3.

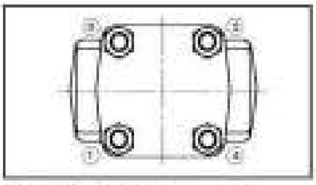

Figure 7.28 Bolt tightening sequence

Table 7.3
Torque values (100%) for body-bonnet bolting

BOLT SIZE	BOLTING MATERIAL	
	B7, B16	660
½ - 13UNC	50 (68)	35 (48)
⅝ - 11UNC	[illegible]	[illegible]
¾ - 10UNC	[illegible]	[illegible]
⅞ - 9UNC	[illegible]	[illegible]
1 - 8UNC	[illegible]	[illegible]
1⅛ - 8UN	[illegible]	[illegible]
1¼ - 8UN	[illegible]	[illegible]
1⅜ - 8UN	[illegible]	[illegible]

Notes: 1) All values (lbft/Nm). Torque tolerance ±10%.
2) For other sizes and bolting materials, please contact the manufacturer.

7.3.3 Application of Torque

When applying the torque to the bolts, each bolt should be torqued in steps of approximately 20% of the final torque. As the final torque is approached, the required step will be much less than 20%.

> **CAUTION:**
> 1. If tightening sequence is not followed, it is possible that the spiral wound gasket will not be compressed evenly, causing the body-bonnet joint to leak.
> 2. Over-torquing could deform the bonnet flange and cause joint leakage.
> 3. Do not use an impacting device to draw up the bolting on body and bonnet (cover) closures.

7.3.4 Replacement of Spiral Wound Gasket

1. The gasket seating faces (the recess in the body and the bonnet face) must first be checked for smoothness. Scratches can normally be removed with an emery cloth. The faces should then be solvent degreased and dried before assembly. Approved solvents are acetone, alcohol or Freon PCA.
2. Install new spiral wound gasket between the body and bonnet joint. The body is now ready for installation of the bonnet assembly and tightening of the bolting in accordance with the torquing procedure.

> **CAUTION:** Valve must be partially open when torquing bolts to prevent damage to seating surface.

7.3.5 Packing Torques

1. Clean all gland studs (16) and gland nuts (18). Visually inspect all threads to ensure removal of all foreign matter, rust, corrosion, burrs and previous lubricant.
2. Liberally cover the stud threads and the female threads of the nuts with anti-seize compound FEL PRO C5-A or approved equivalent.
3. With gland nuts (18) hand tight, tighten them a little at a time on each side, then torque down to the correct torque in accordance with the valve type, size and pressure class, as shown in Table 6.1.2, and use Packing Consolidation Method.
4. Values given in Table 6.1.2 are approximate for standard Velan valves. Whenever possible, refer to the Project Engineering drawing for a particular valve and its torque.

7.3.6 Packing Consolidation Method

1. Insert the first packing ring, braid graphite type (end ring) and place as deep into the packing chamber as possible, followed by graphite ribbon (intermediate packing rings) refer to Figure 7.34.

   NOTE: The split lap joints of each consecutive ring should be staggered at approximately 120° apart.

2. Install the last braided graphite type packing ring (end ring). Lower the gland bushing and check for positive engagement with packing chamber.

   NOTE: The gland bushing should enter the packing chamber as a rule of thumb approximately ⅛" (3 mm) minimum engagement.

3. Place the packing flange into position. Ensure gland bolt nuts are well lubricated with anti-seize compound. Compress the packing by tightening the nuts to the torque value shown in Table 6.1.2.
4. Cycle the valve for approximately the length of the packing chamber, first open then close and retighten to required final torque (Table 6.1.2). Do this procedure as many times as necessary (approximately 4-5 times) until all packing become fully consolidated (no more loss of torque).

NOTE: For motor operated valves (MOV) use manual override handwheel to cycle open and close.

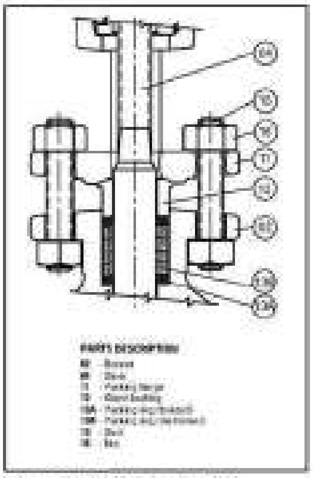

Figure 7.34 Packing rings installed

8.1 DISASSEMBLY

1. Ensure the line has been depressurized.
2. Open the valve partially and remove the gland bolts and the handwheel.
3. Using a hand grinder carefully cut by grinding the body/bonnet seal weld along the body up to the bonnet.
4. To unscrew the bonnet, use a pipe wrench on one yoke arm, loosen well counter clockwise and tap firmly using a brass or plastic hammer.

   NOTE: If the bonnet has not moved, it may indicate the weld has not been removed completely or sufficiently that may require some more grinding to remove.

5. After the bonnet assembly has been unscrewed, the stem together with disc can be removed through the bottom of the bonnet by turning clockwise to disengage from the yoke bushing and once disengaged it can be pulled out and the packing rings can then be removed.

   NOTE: If the yoke bushing needs to be replaced, it will be necessary to grind off the tack welds and turn counterclockwise to unscrew. The valve is now ready for parts replacement and or repair.

   NOTE: Seat and disc repairs and fitting of repair parts refer to Section 7.2.

8.2 REASSEMBLY

1. In general the reassembly procedure in most cases is the reverse procedure of disassembly, refer to Section 7.3.
2. Additionally, prepare the bonnet and body for seal weld by removing remnants of original seal weld. Screw in the bonnet metal to metal and tighten firmly. The valve is now ready for seal welding.
3. Perform seal weld as follows: For 300 series stainless steel valves no preheat nor postweld heat treatment (PWHT) is required. For CS valves type F11 and F22. Preheat is required only, preheat to 300 - 350°F (149 - 176°C). For valves F5 and up, preheat and postweld heat treatment is mandatory.

   NOTE: After seal weld has cooled off, perform a dye penetrate test (PT), or magnetic particle (MT).

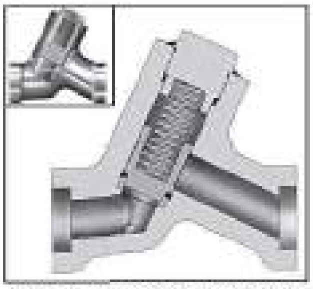

Figure 9.14 Y-pattern inclined welded cover piston check valve.

9.1 DISASSEMBLY, COVER REMOVAL

NOTE: Y-Pattern Inclined Piston Check cover is screwed in and seal welded. To allow cover removal the seal weld must be grinded off or machined.

1. Using a hand grinder with a flat cutting wheel, cut the seal weld along the body up to the cover.
2. To unscrew the cover, use an adjustable wrench on the cover flats, loosen well counter clockwise and at the same time tap firmly on top of the cover using a brass or plastic hammer.

NOTE: If the cover has not moved it may indicate the weld has not been removed completely or sufficiently, that may require some more grinding/cutting to remove.

3. After the cover has been unscrewed, the spring and disc can then be removed for inspection and/or repair/replacement.

9.2 SEAT REPAIRS

Generally seat repairs are similar to bolted bonnet globe except the seat angle of the piston check is 30° angle, refer to Section 7.2 for removal allowances. Refer to Section 4.4 and Table 4.4. For seat lapping using automatic reseater machine, refer to Section 7.2, step 6 and Figure 7.24.

9.3 DISC REPAIRS

Piston check disc repairs are identical to globe disc repairs, except the disc seating angle is of 27½°. Refer to Section 7.2.4 A and B and removal allowances in Section and Table 4.4.

9.4 FITTING OF REPAIRED PARTS: PISTON CHECK VALVES

1. After the seating faces of the disc and seat have been relapped and cleaned with a suitable cleaning fluid, such as acetone or alcohol, the results of the lapping must be verified by a blueing test to check for full circumferential contact. A blueing ink should be distributed smoothly and equally over the seating diameter of the disc. Slowly lower the part into the body and find the correct mating point of the faces, by tapping lightly on top of the disc.
2. When fitting the disc, it is important that the inside diameter of the body be checked for sufficient clearance to allow the disc to move freely up and down. A visual examination of the body wall is recommended. Any grooves or scratches should be polished with a fine emery cloth. It is also important to verify that the disc cannot be forced sideways against the outlet side of the waterway face and become jammed in that position.

9.5 REASSEMBLY

1. In general the reassembly procedure in most cases is the reverse procedure of disassembly, refer to Section 9.1.
2. Additionally, prepare the cover and body for seal weld by removing remnants of original seal weld. Screw in the cover metal to metal and tighten firmly. The valve is now ready for seal welding.
3. Perform seal weld as follows: For 300 series stainless steel valves no preheat nor postweld heat treatment (PWHT) is required. For CS valves type F11 and F22. Preheat is required only, preheat to 300 - 350°F (149 - 176°C). For valves F5 and up, preheat and postweld heat treatment is mandatory.

   NOTE: After seal weld has cooled off, perform a dye penetrate test (PT), or magnetic particle (MT).

TERMS AND CONDITIONS OF SALE

CONTRACT: Orders are subject to acceptance by the Velan Companies hereinafter referred to as the seller. No terms or conditions of Purchaser's order contrary to the Seller's terms and condition shall be binding upon the Seller unless specifically agreed to by the Seller in writing.

MINIMUM ORDER CHARGE: $500.00 net.

PRICES: All quoted prices are subject to change by the seller without prior notice and, unless otherwise stipulated by Seller, are understood to be F.O.B. Seller's plant, with delivery to carrier constituting delivery to purchaser. Right to possession of the material to secure the payment of the purchase price shall remain in Seller until all payments therefore shall have been fully made. For the protection of the Purchaser and the Seller, verbal customer orders must be confirmed by a formal written purchase order. If a written purchase order is not received within ten days of a verbal order, product descriptions, quantities, specifications, etc., as set forth in Seller's acknowledgement and invoice shall be conclusive and binding on both parties. Any order that is shipped before receipt of confirmation which might have been entered incorrectly and would require remedial action would be for the Purchaser's account.

TAXES: All prices are exclusive of taxes. Sales, use and other taxes, by whomsoever levied, are to be paid by the Purchaser and unless invoiced, are to be paid by the Purchaser directly to the appropriate governmental agency.

DELIVERY: Delivery or shipment specified is Seller's best estimate and Seller shall not be liable for delay in deliveries resulting from any cause whatsoever. Failure to ship on or near the estimated date shall not entitle Purchaser to cancel his order without charge.

RETURN OF MATERIALS: Materials may be returned only with prior written agreement of Seller.

CANCELLATION: Cancellation of orders may be made only with the Seller's written consent and Purchaser shall be subject to cancellation charges.

PRODUCT WARRANTY: Seller warrants the equipment of its own manufacture to be free of defects in material and workmanship, under normal use and proper operation for a period of one year from the date of shipment from Seller's plant. Seller's obligation under warranty shall be strictly limited, at Seller's option, to: (i) furnishing replacement parts for or repairing without charge to Purchaser, F.O.B. Seller's plant or (ii) issuing written authorization for Purchaser or others to replace or repair without charge to Purchaser, at costs comparable to Seller's normal manufacturing costs those parts proven defective; or (iii) in discharge of Seller's maximum liability herewith, refunding all monies paid by Purchaser to Seller for the Product and, at discretion of Seller, having the product removed and returned to Seller at Purchaser's expense. All transportation charges relative to corrective work, defective parts or replacement parts shall be borne by Purchaser. Purchaser shall give Seller immediate notice upon discovery of any defect. The undertaking of repairs or replacements by Purchaser or its agents without Seller's written consent shall relieve seller of all responsibility herewith.

Finished materials and accessories purchased from other manufacturers are warranted only to the extent of the manufacturer's warranty to Seller.

Any alteration in material or design of Seller's product or component parts thereof by Purchaser or others without written authorization by Seller voids all obligations of Seller regarding the product and any associated warranty herein stated or implied.

Seller's sole liability shall be exclusively as set forth herein, and Seller shall not be liable for any incidental or consequential damages due to its breach of any warranty herein contained, or otherwise. Without limitation to the foregoing, in no event shall Seller be liable for the loss of use of the product or of any other product, process, plant, equipment, or facilities of the Purchaser or end user whether partially or wholly due to defects in material and / or workmanship and / or design of Seller's product, and in no event shall Seller be liable for removal of appurtenances or incidentals such as connections, pipe work and similar items of obstruction or for any cost brought about by the necessity of removing the product from its point of installation.

Seller makes no warranty of any kind whatsoever, expressed or implied, other than as specifically stated herein; and there are no warranties of merchantability and/or fitness for a particular purpose which exceed the obligations and warranties specifically stated herein.

Parts furnished without charge as replacements for original parts under warranty are warranted for that period of time during which the original parts warranty is effective.

ALL SHIPMENTS WILL BE F.O.B. PLANT LOCATION. SHIPMENTS WILL BE MADE VIA MOST ECONOMICAL CARRIERS UNLESS OTHERWISE REQUESTED TERMS: NET 30 DAYS FROM DATE OF INVOICE: 1½% PER MONTH OF ALL OVERDUE ACCOUNTS. ALL TAXES EXTRA. PRICES SUBJECT TO CHANGE WITHOUT NOTICE.

MANUFACTURING PROGRAM

Valve Product Line	Size		Pressure Class	Applicable Specifications
	NPS	DN		
Forged pressure seal and bolted bonnet gate, globe, and check valves	2 – 24	50 – 600	PS: ASME 600 – 4500 BB: ASME 150 – 1500	ASME B16.34
Small forged steel gate, globe, and check valves	¼ – 2	8 – 50	ASME 150 – 4500	API 602, 600 ASME B16.34
Forged steel Y-pattern globe valves	½ – 4	15 – 100	ASME 800 – 4500	ASME B16.34
Cast steel gate, globe, and check valves	2 – 56	50 – 1400	ASME 150 – 1500	API 600
Cast stainless steel gate, globe, and check valves	¼ – 24	8 – 600	ASME 150 – 600	API 603 ASME B16.34
Dual plate check valves	2 – 60	50 – 1500	ASME 150 – 2500 API 6A 2000 – 5000	API 594
All stainless steel knife gate valves	2 – 36	50 – 900	150 psig CWP	TAPPI TIS 405-8 MSS SP-81
Memoryseal® ball valves	¼ – 24	8 – 600	ASME 150 – 600 up to 3000 WOG	ASME B16.34
General purpose ball valves	¼ – 2	8 – 50	600 – 2000 WOG	Up to ASME B16.34
Metal seated ball valves	½ – 24	15 – 600	ASME 150 – 4500	ASME B16.34
Triple offset valves	3 – 48	80 – 1200	ASME 150 – 600	API 609 ASME B16.34
Bellows seal gate and globe valves	½ – 12	15 – 300	ASME 150 – 2500	ASME B16.34
Cryogenic gate, globe, check, ball, and butterfly valves	½ – 60	15 – 1500	ASME 150 – 1500	ASME B16.34

Headquartered in Montreal, Canada, Velan has several international subsidiaries. For general inquiries:

Velan head office
7007 Côte de Liesse,
Montreal QC H4T 1G2 Canada
Tel: 514-748-7743 **Fax:** 514-748-8635

Check our website for more specific contact information.
www.velan.com

© Velan Inc., Montreal, QC, Canada. All rights reserved. [illegible]

VELAN

PRINTED IN CANADA

IOM-PROM-03-11

INSTALLATION AND OPERATION MANUAL

FORGED STEEL VALVES

Bolted Bonnet: Gate, Globe, Piston Check, Swing Check, and Ball Check Valves

Welded Bonnet: Gate, Globe and Check Valves

Sizes: NPS ¼—2 (DN 8—50)

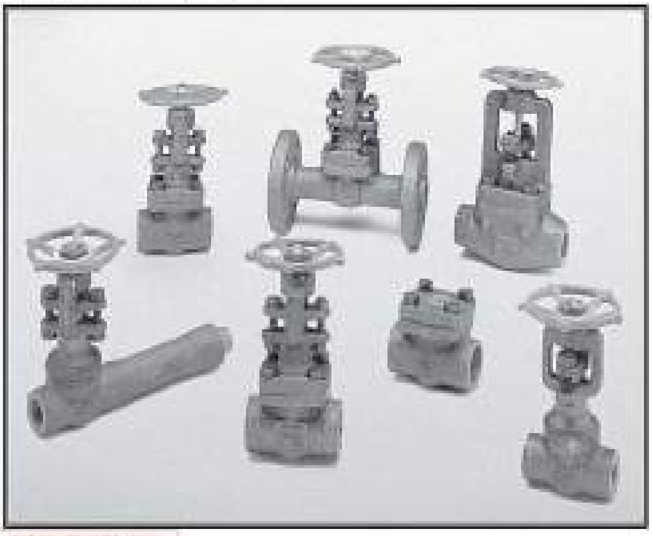

VOGT POWER INTERNATIONAL
[illegible]
[illegible] | Dec-07-2018

VOGT POWER INTERNATIONAL
V17801-PVXE-516-00
07-Dec-2018

IOM-SFVBM-[illegible]

VELAN

TABLE OF CONTENTS

GENERAL INFORMATION — **PAGE**

I INTRODUCTION **5**
1.1 General Introduction 5
1.2 Essential Features of Velan Valves 6

II RECEIVING & PREPARATION FOR INSTALLATION **7**
2.1 Receiving Inspection 7
2.1.1 Welding of Valves In Line 7
2.1.2 Post Weld Heat Treatment 7
2.2 Storage 7
2.3 Special Instructions for Gate Valves 8
2.4 Special Instructions for Globe Valves 8
2.5 Special Instructions for Piston Check, Stop Check, Ball Check and Swing Check Valves 9
2.6 Factors for Seat Tightness With or Without Line Pressure 11
2.6.1 Seat Cleaning Flushing 11

III WARNINGS **12**

IV GENERAL MAINTENANCE **13**
4.1 Operation 13
4.1.1 General 13
4.1.2 Smoothness of Operation 13
4.1.3 Seat Tightness and Closing Torques 13
4.2 Recommended Lubrication 13

V INFORMATION PERTINENT TO GATE, GLOBE AND CHECK VALVES **14**
5.1 Packing Chamber Leakage 14
5.1.1 General 14
5.1.2 Packing Ring Removal On Line - Use of Backseat 14
5.1.3 Repacking with Uncompressed Packings 14
5.1.4 Repacking Valves Using "Packing Consolidation Method" 15
5.1.5 Packing Torques 15
5.2 Body-Bonnet Joint Tightness 16
5.2.1 General 16
5.2.2 Body-Bonnet Bolt Torquing 16
5.2.3 Torque Procedure 17
5.2.4 Application of Torque 17
5.2.5 Replacement of Spiral Wound Gasket 17

GATE VALVES

VI GATE VALVES **18**
6.1 Seat Leakage 18
6.1.1 General 18
6.1.2 Wedge Repairs: Gate Valves 18
6.1.3 Seat Repairs: Gate Valves 18
6.1.4 Fitting of Repaired Parts: Gate Valves 19
6.2 Disassembly of Gate Valves 20
6.2.1 General 20
6.2.2 Total Disassembly 20
6.3 Reassembly of Gate Valves 20
6.3.1 General 20

Globe Valves — Page

VII Globe Valves 21
- 7.1 Seat Leakage 21
  - 7.1.1 General 21
  - 7.1.2 Seat Repairs: Globe Valves 21
  - 7.1.3 Fitting of Repaired Parts: Globe Valves 21
- 7.2 Disassembly of Globe Valves 22
  - 7.2.1 General 22
  - 7.2.2 Total Disassembly 22
- 7.3 Reassembly of Globe Valves 23
  - 7.3.1 General 23

Check Valves

VIII Check Valves 24
- 8.1 Seat Leakage 24
  - 8.1.1 General 24
  - 8.1.2 Seat Repairs: Piston Check, Stop Check, and Ball Check Valves 24
  - 8.1.3 Seat Repairs: Swing Check Valves 24
  - 8.1.4 Fitting of Repaired Parts: Piston Check and Stop Check Valves 24
  - 8.1.5 Supplementary Instructions for Soft Seated Piston Check Valves 24
  - 8.1.6 Fitting of Repaired Parts: Swing Check Valves 25
- 8.2 Disassembly of Check Valves 26
  - 8.2.1 General 26
  - 8.2.2 Disassembly of Small Bolted Cover Piston Check, Stop Check, and Ball Check Valves 26
  - 8.2.3 Disassembly of Swing Check Valves 27
- 8.3 Reassembly of Check Valves 28
  - 8.3.1 General 28
  - 8.3.2 Reassembly of Piston Check, Stop Check, and Ball Check Valves 28
  - 8.3.3 Reassembly of Swing Check Valves 28

Welded Bonnet Valves

IX Welded Bonnet Valves 29
- 9.1 Welded bonnet Gate, Globe and Check Valves 29
  - 9.1.1 Disassembly 29
  - 9.1.2 Reassembly 29

Terms and Conditions of Sale 31

Figures — Number — Page

Angle of inclina and roll angle for piston check, stop check, ball, and swing check valves 2.0E 11
Bolted bonnet gate valve 2.4 8
Bolted bonnet globe valve 2.4 8
Bolted cover piston check valve 2.5A 10
Bolted cover piston check valve exploded view 8.2A 26
Bolted cover stop check valve 2.5D 10
Bolted cover swing check valve 2.5E 10
Bolted cover swing check valve with integral hinge 2.5C 10
Bolted cover ball check valve exploded view 8.2B 28
Bolt tightening sequence 4.2B 17
Braided graphite packing ring 5.1D 15
C-clamp packing removal tool 5.1B 14
Flexible packing removal tool cork screw tip 5.1A 14
Gasket recess 4.2A 16
Gate valve wedge 6.1B 19
Graphite ribbon packing 5.1C 15
Lantern ring configuration 5.1E 16
Packings installed 5.1H 18
Stop check valve exploded view 8.2C 27
Piston disc with replaceable CTFE or PTFE soft seat 8.1B 25
Piston disc with replaceable EPDM soft seat 8.1A 25
Six packings installed 5.1G 18
Six packings shown 5.1F 18
Steel disc contact pads 7.1A 22
Swing check valve exploded view 8.2D 27
Tempered disc - brass pad 7.1B 22
Tempered disc - hardface deposit 7.1C 22
Welded bonnet gate valve 9.1C 29
Welded bonnet globe valve 9.1B 29
Welded cover piston check 9.1A 29
Wedge rotating face 6.1A 19

Tables — Number — Page

Locking nut torques 6.1 20
Packing flange nut torques for gate or globe valves (graphite ribbon or PTFE packing) 4.1.2 13
Recommended lubrication 4.2 13
Torque values (100%) for body-bonnet bolting 4.3 17
Welding guidelines 2.1 7

1.1 GENERAL INTRODUCTION

VELAN

This manual has been prepared by Velan engineers, designers and maintenance personnel to assist you in obtaining many years of satisfactory service from your forged steel valves. It will also assist you in restoring your valve to the best working condition with a minimum of time and expense.

Velan valves are designed and manufactured based on many years of research and product development and are constantly being improved. Before beginning any major work, we recommend that you read this booklet carefully at least once to understand the valve's physical condition.

Please note that if you do not understand the reason for the service problem, we suggest that you get in touch with your local Velan representative or call the Customer Service Manager for technical assistance.

Before beginning any major work, we recommend that you carefully check the nameplate on the valve and record the figure number to identify the type and size of valve. See the "Essential Features of Velan Valves" form on the following page for an explanation of Velan "Figure Numbers".

1.2 ESSENTIAL FEATURES OF VELAN VALVES

Gate, Globe and Check Valves

A B C D E F G

A TYPE OF CONNECTION

B SIZE OF CONNECTION

C CLASS

D TYPE

E BODY / BONNET STYLE

F BODY MATERIAL

G TRIM MATERIAL

2.1 RECEIVING INSPECTION

All valves must be examined for signs of damage that may have occured during transportation. Any damage should be analysed and a report should be issued. Serious damage should be reported to your local Velan representative or to the Customer Service Department so that a suitable arrangement for repairs can be made without delay.

2.1.1 Welding of Valves In-Line

Permanent partnering in line welding of socket weld and butt weld end valves should use their in-house weld procedures. The interpass temperature should be monitored so not to overheat the valve body and cause possible seat deformation. The valve should be in a closed position during in line welding.

2.1.2 Post Weld Heat Treatment

Valve post weld heat treatment (PWHT) can be a serious and complicated procedure and it is recommended to only do it when required by the piping code.

Valves requiring PWHT be made should be subjected to local PWHT only. Valves requiring PWHT should be lightly closed and remain in the closed position throughout the entire PWHT procedure. After closing, the handwheel should be slightly backed off to take the stress out of the stem to gate/disc and stem to drive nut contacts.

NOTE: This is not intended to pull the gate/disc out of the seated position.

2.2 STORAGE

Valves can be stored at any temperature in a sheltered area but must be protected from contamination by dirt or the elements. The valve is shipped with end protectors on the inlet and outlet which should stay in place until the valve is ready to be installed. Before installation, the end protectors must be removed and connections must be checked for cleanliness. Visible foreign matter must be removed from end connections of weld end valves. The weld end must be cleaned with a suitable solvent, such as acetone or alcohol. Do not use leaking adhesive containing fluoride or chloride.

Table 2.1 Welding guidelines

MATERIAL GROUP			MINIMUM PREHEAT TEMPERATURE °F (°C)		MAXIMUM INTERPASS TEMPERATURE °F (°C)	SOAKING TEMPERATURE FOR PWHT TIME (HOURS/MIN) (1 MINUTES MINIMUM) °F (°C)
Carbon Steels	P-No. 1	A106, WCB, LCB, LCC, LCB (P)	T < 1.38"	50 (10)	Variable, but shall be controlled when material and weld engineering is required.	1150 - 1200 (620 - 650)
			T > 1.38 - 2.00"	125 (50)		
			T > 2.00"	250 (121)		
Low Alloy Steels (Chrome Moly)	P-No. 3	F, WC1, LC	150 (66)		600 (316)	1150 - 1200 (620 - 650)
	P-No. 4	F1, WC6, WC9, F11	300 (150)		600 (316)	1150 - 1200 (620 - 650)
	P-No. 5A	F5, WC5, C12	350 (175)		600 (316)	1300 - 1400 (705 - 760)
	P-No. 5B (Gr.1)	F9, F9, C5, C12, F9, F9	450 (230)		600 (316)	1350 - 1400 (730 - 760)
	P-No. 5B (Gr.2)	F91, F91, C91	450 (230)		600 (316)	1400 - 1500 (760 - 815) 2 hrs minimum
Stainless Steels	P-No. 8	Series 300	50 (10)		350 (177)	
1.5 - 2.5 Nickel Alloys	P-No. 9A	LC2	150 (66)		500 (260)	1150 - 1200 (620 - 650)
	P-No. 9B	LC3, LF3	300 (150)		500 (260)	1150 - 1200 (620 - 650)

NOTE: 1. *For preheating, ensure that the temperature reading is at least to a distance of 3 times the wall thickness.*

2. *The above guidelines are for recommendation purposes only. The actual welding procedures (WPS & PQR) used* ***must be qualified*** *to ASME code Section IX.*

2.3 SPECIAL INSTRUCTIONS FOR GATE VALVES

The flow through gate valves can be from either end. There may be exceptions to this if bypass piping is welded to the valve body or pressure relief hole is drilled in one side of the valve gate. Check your piping layout drawing to ensure correct position and direction of flow. Gate valves should be installed and welded into the pipeline with the wedge or disc in the fully closed position. If the valve is left open or partially open, it could distort and leak during operation. Also, leaving the valve in a fully closed position helps prevent weld spatter from falling directly onto the mating faces of the seats. The preferred orientation of a gate valve is upright. The valve may be installed in other orientations, but any deviation from vertical is a compromise. Installation upside down is not recommended because of possible dirt build up in the bonnet.

NOTE: Gate valves should not be used for throttling to control the flow, they are normally fully open or fully closed. If left in partially open position could result in severe damage to body seats, wedge, stem and guide rails.

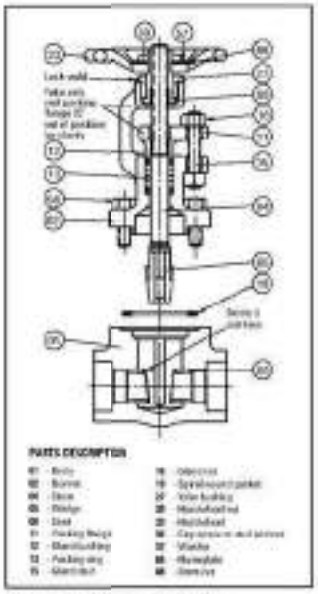

Figure 2.2 Bolted bonnet gate valve

2.4 SPECIAL INSTRUCTIONS FOR GLOBE VALVES

Globe valves are usually installed with the inlet below the valve seat (Figure 2.4). This should be verified to prevent incorrect installation. For particularly severe throttling service, it is recommended that the valve be installed so that the flow enters over the top of the seat and goes down through it. This maintains the valve in a more stable condition, minimizes wear and reduces the potential noise level. Valve operation is also easier because reduced torque is required to close the valve.

IMPORTANT: Generally all small forged valves NPS ½ to 2 have the body seats swaged in. Exception to this rule the following valves have the seats seal welded:

1. Nuclear valves of all classes and material used.
2. Navy valves of all classed and materials used.
3. Motor or pneumatic actuator valves of all classes and materials used.
4. Commercial valves:
   a. NPS 2 (DN 50) full bore 900 class valves and all 1500 and 1600 class valves in F5, F9, F11, F22, F91 and stainless steel types.
   b. All 2500 and 4500 class valves and all materials used.

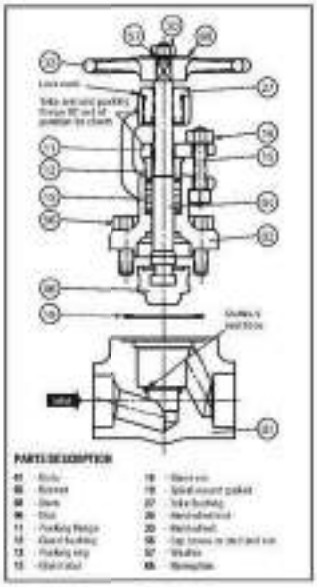

Figure 2.4 Bolted bonnet globe valve

CAUTION: Globe valves should be installed and welded into the pipeline with the disc in a fully closed position to prevent damage to the valve during installation. Also, leaving the disc in a fully closed position helps prevent weld spatter from falling directly onto the mating faces of the seat and disc. Globe valves with soft sealed disc must be in the open position prior to welding into the pipeline. Installation upside down is not recommended because of possible dirt build up in the bonnet.

2.5 SPECIAL INSTRUCTIONS FOR PISTON CHECK, STOP CHECK, BALL CHECK & SWING CHECK VALVES

Piston check, stop check, ball check and swing check valves must be installed with the inlet in the direction of the arrow, as shown in *Figure 2.5A, 2.5B, 2.5C and 2.5D*. This should be verified before installing the valve. Placing a piston check, stop check, ball check and swing check valve inlet opposite the direction of flow prevents the disc or ball from lifting and therefore prevents normal operation of the valve.

All piston check, stop check, and ball check valves should be installed in a horizontal pipe run with the cover/bonnet up, and the angle of inclina of the line should be no more than 30° from horizontal. Also, the roll angle of the valve cover should be no more than 30° from side to side (*Figure 2.5E*). For vertical flow conditions, please consult the Velan Customer Service Department. Swing check valves should be installed in an horizontal, inclined or vertical position. The roll angle of the valve cover should be no more than 30° from side to side (*Figure 2.5E*).

NOTE: All check valves should be installed at least six pipe diameters away from upstream pumps, elbows, fittings or equipment and at least five pipe diameters away from downstream elbows. If closer installation is required, please consult the Velan Customer Service Department.

WARNING: Soft seated piston check, stop check and swing check valves should not be welded into the pipeline with the soft sealed disc in the valve. The disc must be removed and reinstalled after the valve is welded into the pipeline.

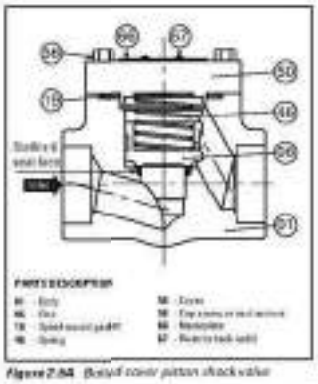

Figure 2.5A Bolted cover piston check valve

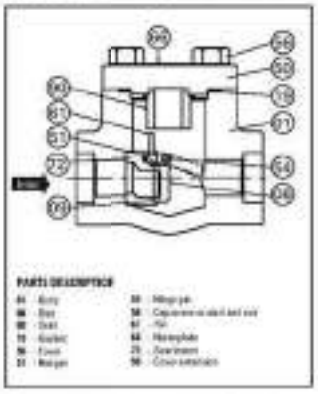

Figure 2.5B Bolted cover swing check valve

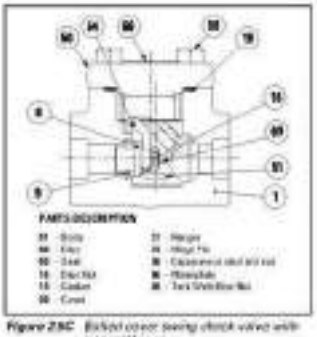

Figure 2.5C Bolted cover swing check valve with integral lamps

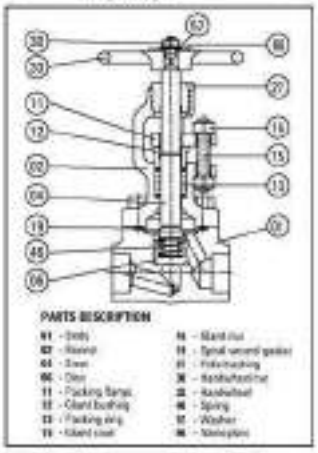

Figure 2.5D Bolted cover stop check valve

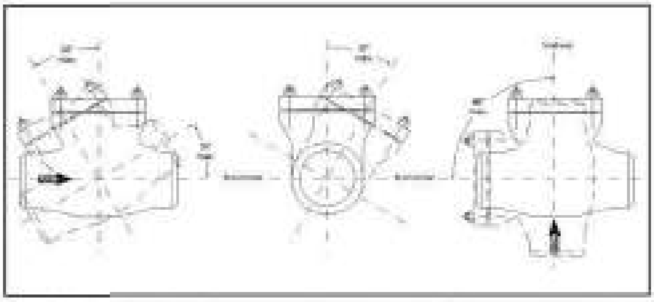

Figure 2.9E Angle of incline and roll angle for piston check, stop check, ball, and swing check valves

2.6 RECHECK FOR BOLT TIGHTNESS WITH OR WITHOUT LINE PRESSURE

After valve installation, recheck and retighten the bolts including gland bolts as necessary to the values given as follows:

Gasket bolts: body-bonnet, see Table 5.2.

Packing bolts: For gate and globe valves see Table 4.1.2.

The tightness of the joint bolt tension and gland bolts should be checked at approximately one year intervals thereafter. Use bolt tightening procedure as follows:

1. Remove one nut at a time, lubricate stud and nut face thoroughly with an approved anti-seize compound and torque to recommended values shown in Table 5.2.
2. Remove opposite nut and repeat procedure until all nuts have been retorqued.
3. Recheck bolt torque by going once around clockwise.

   NOTE: If the body-cover/bonnet gasket must be replaced, follow torque values shown in *Section 5.2.3 Torque Procedure.*

2.6.1 Seat Cleaning-Flushing

After installation prior to system test and start-up, it is recommended to clean the valve by flushing line debris matter that may have accumulated inside the valve and between the valve seating surfaces during Plant construction and valve installation. Open the valve fully, flush as deemed necessary, then close and open the valve while flushing. If seat leakage is noted after flushing repeat the procedure. If the leakage still persists, it must be assumed the seating surfaces maybe damaged.

NOTE: If seat must be repaired, follow *Section 8.1 Seat Leakage.*

FOR SAFETY REASONS,

it is important to take these precautions

- Prior to making any adjustments on the valve, [illegible] the line where the valve is installed.
- Before removing the yoke nut under pressure, the valve should be in fully open position in order to prevent injuries.
- Before removing a valve from a line, line pressure must be relieved with no exception.
- [illegible] valves can be equipped with a variety of manual gear, electric motor, hydraulic or pneumatic actuators. Generally, all pressure must be relieved from both sides of the valve before the actuator is removed.
- A valve in the fully open position (backseated), should not be jammed tight [illegible] to avoid thermal binding. It is our recommendation that the valve be removed ¼ turn of the handwheel from the fully open position. This will also ensure that packing tightness [illegible]. In gear-operated valves, because of the backlash, it is difficult [illegible] to ensure this position.
- Valve standards, such as API and MSS, caution users that successful completion of a backseat test should not be construed as a recommendation by the manufacturer that a valve may be repacked while it is under pressure. The backseat may be used as a means of stopping or reducing packing leakage until the packing can be replaced under no pressure. Removal of packing with the valve under pressure is at the owner's risk.
- [illegible] is not responsible for [illegible] carried out in the field and resulting consequences. Check factory before [illegible].

4.1 OPERATION

4.1.1 General

All valves should be checked before being put into operation and should be inspected regularly during operation. Prompt attention should be paid when trouble arises. As a general rule, valves should be subjected to scheduled maintenance.

4.1.2 Smoothness of Operation

Stem threads, stem nuts and other working components outside the fluid area should be lubricated frequently (at least once every six months). Specific lubricants and frequency of application are shown in Table 4.2.

IMPORTANT: Excessive handwheel effort can indicate the following:

1. Improperly lubricated or damaged valve stem.
2. Valve packing compression too tight (see Torque Table 4.1.2).
3. Faulty or damaged valve parts.

4.1.3 Seat Tightness and Closing Torques

Even a new valve with seating faces lapped to perfection and a full seat-wedge or disc contact will be pressure tight only if sufficient stem load is applied. The minimum stem load for each size of valve varies with operating pressure in order to seat the valve properly. Slight over torquing will not damage the valve.

CAUTION: Do not use "cheaters" on the handwheel.

Table 4.1.2 Packing flange nut torques for gate or globe valves (graphite ribbon or PTFE packing)

SIZE in.	SIZE (mm)	CLASS	STUD SIZE	GATE VALVES TORQUE ft-lbs	GATE VALVES TORQUE (Nm)	GLOBE VALVES TORQUE ft-lbs	GLOBE VALVES TORQUE (Nm)
[illegible]	[illegible]	150 - 600	[illegible]	[illegible]	[illegible]	[illegible]	[illegible]
[illegible]	[illegible]	900 - 1500	[illegible]	[illegible]	[illegible]	[illegible]	[illegible]
[illegible]	[illegible]	2500	[illegible]	[illegible]	[illegible]		
[illegible]	[illegible]	150 - 600	[illegible]	[illegible]	[illegible]	[illegible]	[illegible]
1	[illegible]	900 - 1500	[illegible]	[illegible]	[illegible]	[illegible]	[illegible]
[illegible]	[illegible]	150 - 600	[illegible]	[illegible]	[illegible]	[illegible]	[illegible]
[illegible]	[illegible]	2500	[illegible]	[illegible]	[illegible]		
[illegible]	[illegible]	900 - 1500	[illegible]	[illegible]	[illegible]	[illegible]	[illegible]
2	[illegible]	150 - 600	[illegible]	[illegible]	[illegible]	[illegible]	[illegible]
2	[illegible]	2500	[illegible]	[illegible]	[illegible]		

NOTE: *For other sizes and packing materials, contact the manufacturer.*

4.2 RECOMMENDED LUBRICATION

Table 4.2 Recommended lubrication

PART	LUBRICATION	APPLICATION	FREQUENCY
Stem threads	[illegible]	[illegible]	[illegible]
Yoke nut	[illegible]	[illegible]	[illegible]
All threaded parts except stem and yoke nut	[illegible]	[illegible]	[illegible]

NOTE: Recommended lubricant subject to change without notice.

5.1 PACKING CHAMBER LEAKAGE

5.1.1 General *(Figures 2.3 and 2.4)*

If moisture or dripping occurs around the stem (4) or the gland bushing, the following points must be investigated before removing the packing rings (13).

CAUTION: For safety reasons, the valve must be depressurized before removing packing (13) or dismantling gland nuts (18).

1. Check if the packing flange bolting is torqued to the correct torque as shown in Table 4.1.2.
2. Make sure the gland bushing (12) is not binding against the packing chamber wall or stem (4). If so, open valve to backseat position and firmly tighten up on backseat. Loosen the gland nuts (18) and realign the gland bushing (12). Retighten the packing flange (11) with the gland nuts (18), a little at a time on each side, then torque down to the correct torque as shown in Table 4.1.2.
3. After retightening, cycle the valve three to five times and retighten gland nuts (18) after each cycle until fully consolidated to original torque value (Table 4.1.2). Slacken the gland nuts (18) slightly if torque is too high. If steps 1 to 3 do not stop leakage, proceed with the removal and replacement of packing rings (13).

5.1.2 Packing Ring Removal On Line – Use of Backseat

For safety reasons, follow warning instructions in *Section II* before replacing packing rings on line. The valve must be depressurized.

1. Remove the packing flange nuts and, if fit with live-loading, remove Belleville spring washers.
2. Lift packing flange and gland bushing as high as possible and secure.
3. For braided packing rings *Figures 5.1E and F* use special flexible removal tools (cork screw tip) *Figure 5.1A* screw into the packing ring and pull out.

   For graphite ribbon packing *Figures 5.1E and 5.1F* with special C-saw tool *Figure 5.1B* cut through the packings, apply downward pressure as you work the tool in a back and forth motion. Blow out packing remains using [illegible] with a vacuum cleaner. Care must be taken not to scratch the stem or the walls of the packing chamber during the removal of the packing rings.
4. If the valve is equipped with a leak-off pipe, there is a lantern ring after the third packing ring. To remove the lantern ring, insert two hooks into the holes at the top of the lantern ring and pull out.
5. After the lantern ring is lifted, the last four packing rings can be removed using the procedure described in step 3.

   NOTE: The use of packing removal tools can facilitate packing removal and save considerable time see *Figure 5.1A and 5.1B.*

5.1.3 Repacking with Uncompressed Packings

Valves generally uses two types of packings: pre-formed graphite ribbon continuous ring and braided graphite, or PTFE. The packing procedure is basically the same for both types of packing.

Before inserting the packing ring (13A), check the stem (4) and the packing chamber wall to make sure there is no damage. Scratches up to 0.005 in (0.13 mm) can be removed by polishing the surface with an extra fine emery cloth or by machining stems.

Figure 5.1A *Flexible packing removal tool cork screw tip*

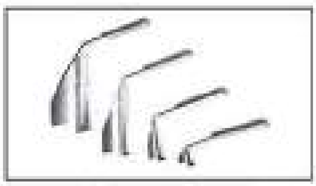

Figure 5.1B C-saw packing removal tool

5.1.4 Repacking Valves Using "Packing Consolidation Method".

Graphite ribbon packing may be cut as shown in Figure 5.1C to facilitate insertion into bonnet chamber.

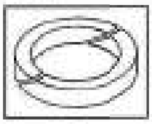

Figure 5.1C Graphite ribbon packing.

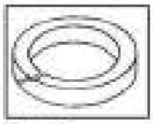

Figure 5.1D Braided graphite packing ring.

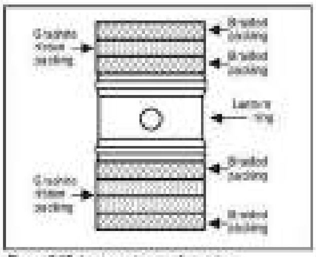

Figure 5.1E Lantern ring configuration

1. Insert one braided packing ring, followed by intermediate graphite packings and one last braided packing ring refer to Figure 5.1F. Lower the gland bushing and check for bushing positive engagement.

   NOTE: As a rule of thumb ⅛" (3.2 mm) min. engagement of the gland bushing inside the packing chamber is required (Figure 5.1G).

2. Torque down the gland bolts to torque values shown in Table 4.1.2.
3. Cycle the valve approximately the length of the packing chamber. First open then close and retighten the gland bolts to appropriate torque values. Repeat this step approximately four, five times until the packings become fully consolidated (no more loss of torque).

   NOTE: For motor operated valves (new) use may manual override handwheel to cycle open & close.

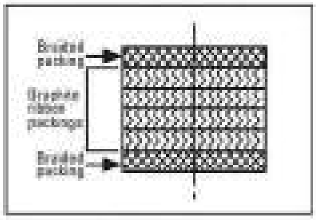

Figure 5.1F Six packings shown

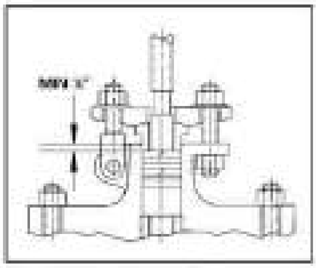

Figure 5.1G Six packings installed

5.1.5 Packing Torques

1. Clean all gland studs (16) and gland nuts (18). Visually inspect all threads to ensure removal of all foreign matter, rust, corrosion, burrs and previous lubricant.
2. Liberally cover the stud threads and the female threads of the nuts with anti-seize compound FEL-PRO C5-A or approved equivalent.

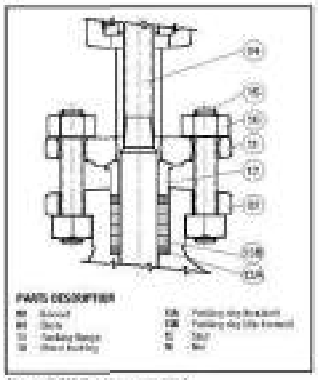

Figure 5.1H Packings installed

3. With gland nuts (18) hand tight, tighten them a little at a time on each side, then torque down to the correct torque in accordance with the valve type, size and pressure class, as shown in Table 4.1.2.
4. Values given in Table 4.1.2 are approximate for standard Velan valves. Whenever possible, refer to the Project Engineering drawing for a particular valve and its torque.

5.2 BODY-BONNET JOINT TIGHTNESS

5.2.1 General (*Figures 2.3, 2.4, 2.5A and 2.5B*)

To maintain the joint tightness of a factory-tested bolted bonnet valve, it is essential to exert sufficient bolt tension at all times by having the proper torque on the nuts. The original torque might be loosened due to vibration, relaxation of material caused by frequent temperature and pressure fluctuations, or by creep in high-temperature applications. It is recommended that the gasket joint be inspected for leakage periodically. The joint bolt tension should be checked at approximately one year intervals.

5.2.2 Body-Bonnet Bolt Torquing

The recommendations in this section are for ideal conditions. Due to the many [illegible] tolerances, some latitude must be allowed in the acceptance standards as follows:

The spiral wound gasket (15) may be fully compressed (zero gap between interfaces of the joint) at 110% of the torque given in Table 5.2. The following criteria should be used (see Figure 5.2A).

The bolt torque is satisfactory if:

a) The spiral wound gasket is fully compressed at 80% of the recommended bolt torque, provided that 100% torque is finally applied.

b) The spiral wound gasket is fully compressed at 100% torque.

c) The gap between the interfaces of the joint is not more than 0.002" (0.05 mm) after 120% torque has been applied and the bolts have been slacked individually and retorqued at 100% torque.

Gasket recess: 0.085 – 0.090" (2.16 – 2.3 mm) (see dimension "A" in Figure 5.2A).

Gasket thickness: ⅛" (3.2 mm) nominal.

NOTE: Bonnet machining does not control gasket compression. Any repair to the body recess should maintain the "A" dimension.

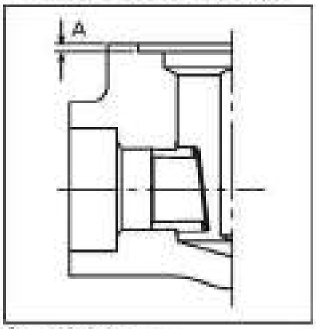

Figure 5.2A Gasket recess

5.2.3 Torque Procedure

1. Clean all studs and nuts and inspect all threads to ensure removal of all foreign matter, rust, corrosion, burrs and previous lubricant.
2. Liberally cover the cap screw (stud) threads and surface under the nut head with anti-seize compound FEL-PRO C5-A or approved equivalent. Also lubricate the female threads of the nuts. Wipe off, with approved solvent, any excess lubricant that may adhere to the steel parts. Approved solvents for this work are acetone, alcohol or Freon PCA.

   NOTE: The use of other solvents is not recommended.

3. With bolts hand-tight, follow the bolt tightening sequence shown in Figure 5.2B. The sequence depends upon the number of bolts employed and the sketch shows only one possible tightening sequence. The bolts must be torqued to the recommended values shown in Table 5.2.

Table 5.2 Torque values (100%) for body-bonnet bolting

Bolt Size	Bolting Material	
	[illegible]	[illegible]
[illegible]	[illegible]	[illegible]
[illegible]	[illegible]	[illegible]
[illegible]	[illegible]	[illegible]
[illegible]	[illegible]	[illegible]
[illegible]	[illegible]	[illegible]
[illegible]	[illegible]	[illegible]
[illegible]	[illegible]	[illegible]
[illegible]	[illegible]	[illegible]

NOTE: 1) All values in ft (Nm). Torque tolerance ±10%.
2) For other sizes and bolting materials, please contact the manufacturer.

5.2.4 Application of Torque

When applying the torque to the bolts, each bolt should be torqued in steps of approximately 20% of the final torque. As the final torque is approached, the required step will be much less than 20%.

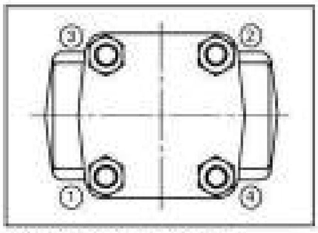

Figure 5.2B Bolt tightening sequence

> **CAUTION**
> 1. If tightening sequence is not followed, it is possible that the spiral wound gasket will not be compressed evenly, causing the body-bonnet joint to leak.
> 2. Over torquing could deform the bonnet flange and cause joint leakage.
> 3. Do not use an impacting device to draw up the bolting on body and cover/bonnet closures.

5.2.5 Replacement of Spiral Wound Gasket

1. The gasket sealing faces (the recess in the body and the bonnet face) must first be checked for smoothness. Scratches can normally be removed with an emery cloth. The faces should then be solvent degreased and dried before assembly. Approved solvents are acetone, alcohol or Freon PCA.
2. Install new spiral wound gasket between the body and bonnet joint. The body is now ready for installation of the bonnet assembly and tightening of the bolting in accordance with the torquing procedure.

> **CAUTION:** Valve must be partially open when torquing bolts to prevent damage to seating surface.

6.1 SEAT LEAKAGE

6.1.1 General

An indication that a valve leakage exists after a valve has been properly closed may be found by observing the pressure loss in the line on the high pressure side of the valve. In the case of hot water or steam lines, note whether the downstream pipe remains hot beyond the usual length of time. This type of leak may be the result of a distorted seat, caused by improper welding of the valve into the pipeline, or by stress-relieving temperature that may have been used during installation, or by foreign matter damage.

Leaks can also be caused by failure to close the valve tightly, resulting in high-velocity flow through a small opening. In spite of the fact that the hardfacing material (Stellite) is corrosion and erosion resistant, grooves, pit marks or other surface irregularities may still form on the mating faces. Valves which leak should be repaired as soon as possible to prevent greater damage caused by high-velocity flow.

6.1.2 Wedge Repairs: Gate Valves

1. Disassemble valve as described in *Section 6.2* and inspect the wedge and seats for scratches, pitting marks or other damage.
2. If seating faces are scratched, they quite often can be polished with very fine emery cloth on a perfectly flat surface.
3. If polishing is not sufficient, the wedge must be lapped. Slight pitting, grooving or indentation can be removed by lapping. If defects cannot be corrected by lapping, the wedge can be ground or machined. No more than 0.005" (0.13 mm) per side should be removed. Relap the wedge after grinding (or machining).
4. A flat plate, preferably cast iron, should be used for lapping, and an abrasive lapping compound mixed with olive oil should be evenly distributed over the plate. Only light, even pressure should be applied with the wedge on the plate. Lift the wedge as often as possible to prevent accumulation of particles in one area and to allow for proper distribution of lapping compound.

   The lapping plate should be turned slightly every few strokes to keep a flat surface. The wedge should be lapped until seating faces are smooth. Velan recommends the use of Clover Compound (silicon carbide) Grade D or C, or an approved equivalent.

> **CAUTION**: Lapping may be slow due to the erosion-resistant surface, but too much lapping must be avoided.

5. Thoroughly clean off the lapping compound with a suitable cleaning fluid, such as acetone or alcohol. Do not use bearing solvents containing chloride or fluoride.

6.1.3 Seat Repairs: Gate Valves

1. Automatic grinding and lapping of seat faces can be done by specialized equipment. Information on this type of equipment can be obtained from certain Velan authorized repair facilities. For further details on such operations, contact Velan Customer Service Department.
2. In those cases where the automatic grinding and lapping machine is not employed, seat faces must be repaired using a lapping plate. The plate should be made of cast iron if possible and should be large enough to cover the face of the seat. Apply lapping compound mixed with olive oil and distribute evenly over the plate. Lap seat by moving lapping plate in a circular motion on seat face. Lift the plate as often as possible to prevent accumulation of particles in one area and to allow for proper distribution of the lapping compound. Lap until both seats have smooth faces and then clean off the lapping compound very thoroughly with a suitable cleaning fluid such as acetone or alcohol.

6.1.4 Fitting of Repaired Parts: Gate Valves

1. After the seating faces of the wedge and/or seats have been relapped and cleaned, you must check the wedge-seat fit. Place the marked-up side of the wedge together with marked-up side of the seat. Slowly lower the wedge into the body and find the correct mating point of the faces. Use bearing blue to check seat contact. Spread a light coating of bearing on wedge seating faces, slip wedge onto the stem. Lower stem/wedge together with the bonnet. Secure bonnet with studs/

nuts. With the handwheel, close the valve firmly and then open partially, remove bonnet nuts and lift entire bonnet assembly. Care should be taken that the wedge does not slip off the stem "T" head. Check wedge seating face for 100% contact as shown in *Figure 6.1A*.

2. If a part cannot be repaired, new parts must be fitted and installed. All spare part wedges can be supplied slightly oversized. They must be ground or machined and lapped as needed to fit over the full circumference of the seat. Contact Velan Customer Service Department for ordering details.

3. *Figure 6.1A* illustrates a wedge with a full seating circumference. This must be achieved when fitting a wedge.

4. When fitting a wedge, it is also important that the wedge guide slots have sufficient clearance to allow the wedge to move freely along the wedge guides, as shown in *Figure 6.1B* (top view). Otherwise the wedge may be prevented from making full contact with seats.

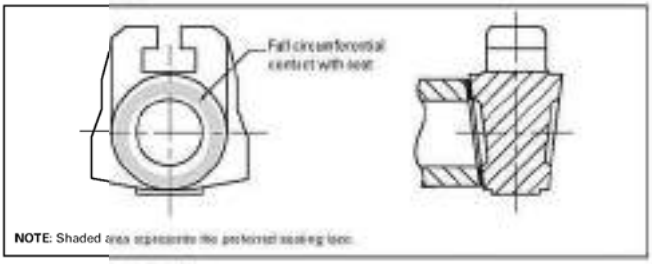

Figure 6.1A *Wedge sealing face*

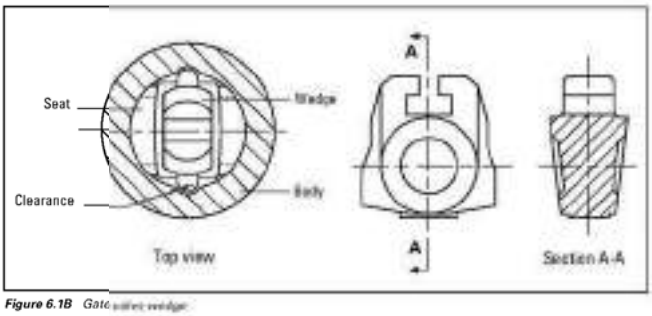

Figure 6.1B *Gate valve wedge*

6.2 DISASSEMBLY OF GATE VALVES

6.2.1 General

There are two basic ways to disassemble Velan valves: (a) total disassembly, and (b) partial disassembly to allow access to the area which requires maintenance. The appropriate method to use depends on the nature of the problem.

Total disassembly: valve internal problems, spiral wound gasket, wedge, etc.

Partial disassembly: valve top works, handwheel.

> **CAUTION:** Make sure all pressure has been relieved from both sides of the valve before starting disassembly work.

6.2.2 Total Disassembly

The disassembly instructions below cover Velan's basic designs. As general disassembly progresses, place matching marks on parts so that the same orientation of parts can be maintained at reassembly. Refer to *Figure 2.3*.

1. The valve should be in a partially open position.

2. If the valve has a blow-off pipe, it must be disconnected first. Cut the blow-off pipe approximately six inches from the bonnet valve and not at the welded joint on the bonnet.

3. Remove body-bonnet cap screw nuts (5B).

   NOTE: If a valve has been in high-temperature service for extended periods of time, the cap screws (5A/B) may be seized to the body (5A/B). Tight nut threads can sometimes be loosened by applying penetrating oil or heat to the nut and working it free. As a last resort, a hacksaw, cutting torch or cold chisel can be used to cut nut away from stud.

4. Once all the cap screw nuts are removed, the entire yoke-bonnet assembly can be lifted out of the valve body as shown in *Figure 2.3*.

5. Remove assembly spiral wound gasket (1B).

6. The valve is now ready for inspection and repairs of wedge, seat, etc.

7. During inspection, check the condition of the body-bonnet cap screws (studs) (5A). Studs may have been damaged when removing seized nuts or when lifting the yoke-bonnet assembly. If cap screws (studs) are damaged, remove and replace them.

   NOTE: When lifting the yoke-bonnet assembly, care should be taken to prevent internal parts from disengaging from the stem. The wedge (6b) is attached to the stem (3A) with a "T" slot, and it can slip off the stem when disengaging from the guides in the body.

6.3 REASSEMBLY OF GATE VALVES

6.3.1 General

The reassembly procedures are for as detailed as the disassembly procedures since in most cases the reverse procedure is required.

1. The most important consideration is the cleanliness of all parts. Rust and dirt should be removed from all parts with a wire brush or emery cloth. Oil and grease should be removed with suitable solvents.

2. Threaded parts (cap screws, nuts, studs) must be well lubricated. Old grease should be removed from the stem and stem nut threads before a new coat of grease is applied. Recommended lubrication is found in Table 4.2.

   NOTE: Use correct lubricant for each individual part.

3. Repaired or replaced parts must be checked to make sure that repair procedures have been done and that replaced parts (e.g., packing rings, spiral gasket, etc.) have been checked for size so that they will fit into the valve you are servicing.

4. All orientation marks assigned during disassembly must be observed so that correct assembly is maintained.

7.1 SEAT LEAKAGE

7.1.1 General

An indication that a valve leakage exists after a valve has been properly closed may be found by observing the pressure loss in the line on the high pressure side of the valve. In the case of hot water or steam lines, note whether the downstream pipe remains hot beyond the usual length of time. This type of leak may be the result of a distorted seat, caused by improper welding of the valve into the pipeline, or by stress-relieving temperature that may have been used during installation.

Leaks can also be caused by failure to close the valve tightly, resulting in high-velocity flow through a small opening. In spite of the fact that the hardfacing material (Stellite) is corrosion- and erosion-resistant, grooves, pit marks or other surface irregularities may still form on the mating faces. Valves which leak should be repaired as soon as possible to prevent greater damage caused by high velocity flow.

7.1.2 Seat Repairs: Globe Valves

1. Disassemble the valve as described in *Disassembly of Globe Valves, Section 7.2*, and inspect the disc and seat for scratches, pitting marks or other damage.

2. If there are deep pitting marks, use a cast iron lapping disc with the proper seat angle and a suitable lapping compound to roughen the surface first. With the use of a new, or already refinished original disc, you can use a finer lapping compound to finish lapping the disc and seat together.

3. (a) Use a guiding plate for the stem to maintain alignment during the lapping operation. It can be made from wood or any other suitable material, to the dimensions of the gasket and the bonnet spigot. The section of the plate where the stem extends through must be 1/64" (0.4 mm) larger than the outside diameter of the stem.

   (b) If the valve has a soft-seated disc, all body lapping must be done with a lapping disc and not with a soft-seated disc.

4. Evenly distribute a small quantity of lapping compound mixed with olive oil on the two mating surfaces.

5. It is important to apply only light, even pressure when lapping seats and to rotate reciprocally. For best results, use an air or electric hand tool with adjustable speed and reciprocal movement. The lapping tool should be lifted frequently and turned to a new starting position.

7.1.3 Fitting of Repaired Parts: Globe Valves

1. After the seating faces of the disc and seat have been relapped and cleaned with a suitable cleaning fluid, such as acetone or alcohol, the results of the lapping must be verified by a blueing test to check for full circumferential contact. A blueing ink should be distributed smoothly and equally over the seating diameter of the disc. Slowly lower the part into the body and find the correct mating point of the faces.

2. When fitting the disc, it is important that the inside diameter of the body be checked for sufficient clearance to allow the disc to move freely up and down. A visual examination of the body wall is recommended. Any grooves or scratches should be polished with a fine emery cloth. It is also important to verify that the disc cannot be forced sideways against the outlet side of the waterway bore and become jammed in that position.

3. Verification of contact between the valve disc and the stem is made by a radius on the end of the valve stem and is designed to give center loading for the disc as closely as possible. A hard thrust pad *(Figure 7.1A)*, which can be found in some designs, will help prevent galling. On valves without a thrust pad, the bearing surface in the disc has a hardface deposit on it *(Figure 7.1B)*. If particles get caught between the end of the valve stem and the disc, the center of the stem could be destroyed and the disc will not seat tightly. The contact surfaces of the stem and the disc must be checked first in leaky valves in order to ensure that the disc-stem contact is in proper condition.

   NOTE: A quick test is to take the stem-disc assembly *(Figure 7.1A)* and check if the disc can be rocked. The rocking will allow the disc to self-align to the seat. Some globe disc with disc union design have a hardface deposit or a thurstpad, (see *Figures 7.1B and 7.1C*.)

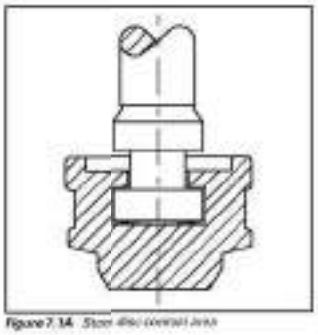

Figure 7.1A *Stem-disc contact area*

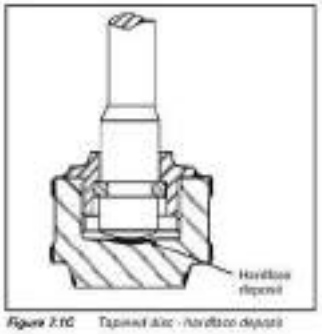

Figure 7.1C *Tapered disc - hardface deposit*

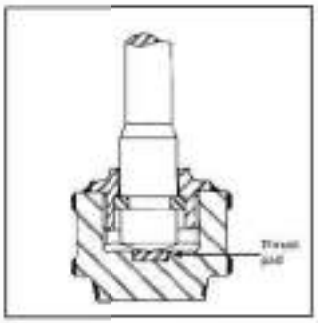

Figure 7.1B *Tapered disc - thrust pad*

7.2 DISASSEMBLY OF GLOBE VALVES

7.2.1 General

There are two basic ways to disassemble Velan valves: (a) total disassembly, and (b) partial disassembly to allow access to the area which requires maintenance. The appropriate method to use depends on the nature of the problem.

Total disassembly: valve internal problems, spiral wound gasket, disc, etc.

Partial disassembly: valve top works, handwheel.

> **CAUTION**: Make sure all pressure has been relieved from both sides of the valve before starting disassembly work.

7.2.2 Total Disassembly

The disassembly instructions below cover Velan's basic designs. As general disassembly progresses, place matching marks on parts so that the same orientation of parts can be maintained at reassembly. Refer to *Figure 2.4*.

1. The valve should be in a partially open position.
2. If the valve has a leak-off pipe, it must be disconnected first. Cut the leak-off pipe approximately six inches from the bonnet side and not at the welded joint on the bonnet.
3. Remove body-bonnet cap screw nuts (98).

   NOTE: If a valve has been in high-temperature service for extended periods of time, the cap screw nuts may be seized to the body studs. Tight nut threads can sometimes be loosened by applying penetrating oil or heat to the nut, and working it free. As a last resort, a hacksaw, cutting torch, or cold chisel can be used to cut the nut away from stud.
4. Once all the cap screw nuts are removed, the entire yoke-bonnet assembly can be lifted out of the valve body as shown in *Figure 2.4*.
5. Remove used spiral wound gasket (19).
6. The valve is now ready for inspection and repairs of disc, seat, etc.
7. During inspection, check the condition of the body-bonnet cap screw studs (98). Studs may have been damaged when removing seized nuts or when lifting the yoke-bonnet assembly. If cap screw studs are damaged, remove and replace them.

   NOTE: When lifting the yoke-bonnet assembly, care should be taken to prevent internal parts from disengaging from the stem. Some discs (8) are attached to the stem (4) with a "T" slot, and they could slip off the stem when it disengages from the guides in the body.

7.3 REASSEMBLY OF GLOBE VALVES

7.3.1 General

The reassembly procedures are not as detailed as the disassembly procedures since in most cases the reverse procedure is required.

1. The most important consideration is the cleanliness of all parts. Rust and dirt should be removed from all parts with a wire brush or emery cloth. Oil and grease should be removed with suitable solvents.
2. Threaded parts (cap screws, nuts, and studs) must be well relubricated. Old grease should be removed from the stem and stem nut threads before a new coat of grease is applied. Recommended lubricants can be found in Table 4.2.

   NOTE: Use correct lubricant for each individual part.
3. Repaired or replaced parts must be checked to make sure that repair procedures have been done and that replaced parts (e.g., packing rings, spiral gasket, etc.) have been checked for size so that they will fit into the valve you are servicing.
4. All orientation marks assigned during disassembly must be observed so that correct assembly is maintained.

8.1 SEAT LEAKAGE

8.1.1 General

An indication that a valve leaks could be caused by improper welding of the valve into the pipeline, or by stress-relieving temperature that may have been used during installation.

In spite of the fact that the hardfacing material Stellite is corrosion and erosion resistant, grooves, pit marks or other surface irregularities may still form on the mating faces. Valves which leak should be repaired as soon as possible to prevent greater damage.

8.1.2 Seat Repairs: Piston Check, Stop Check and Ball Check Valves

1. Disassemble the valve as described in *Disassembly of Small Bolted Cover Piston Check, Stop Check, and Ball Check Valves, Section 8.2.2*, and inspect the disc and seat for scratches, pitting marks or other damage.
2. If there are deep pitting marks, use a cast iron lapping disc with the proper seat angle and a suitable lapping compound to roughen the surface first. With the use of a new, or already refinished original disc, you can use a finer lapping compound to finish lapping the disc and seat together.
3. a) Use a guiding plate for the shaft to maintain alignment during the lapping operation. It can be made from wood or any other suitable material, to the dimensions of the gasket and the bonnet spigot. The section of the plate where the shaft extends through must be 1/64" (0.4 mm) larger than the outside diameter of the shaft.

   b) If the valve has a soft-seated disc, all body lapping must be done with a lapping disc and not with the soft-seated disc.
4. Evenly distribute a small quantity of lapping compound mixed with olive oil on the two mating surfaces.
5. It is important to apply only light, even pressure when lapping seats and to rotate reciprocally. For best results, use an air or electric hand tool with adjustable speed and reciprocal movement. The lapping tool should be lifted frequently and turned to a new starting position.

8.1.3 Seat Repairs: Swing Check Valves

If repairs are required on the seat of a swing check valve, the procedure is the same as described in *Section 6.1.3, Seat Repairs Gate Valves*. The only difference between these seats is the angle of the seat face. They can be repaired with an automatic grinding or lapping machine or manually.

8.1.4 Fitting of Repaired Parts: Piston Check and Stop Check Valves

1. After the seating faces of the disc and seat have been relapped and cleaned with a suitable cleaning fluid, such as acetone or alcohol, the results of the lapping must be verified by a blueing test to check for full circumferential contact. A blueing ink should be distributed smoothly and equally over the seating diameter of the disc. Slowly lower the part into the body and find the correct mating point of the faces.
2. When fitting the disc, it is important that the inside diameter of the body be checked for sufficient clearance to allow the disc to move freely up and down. A visual examination of the body wall is recommended. Any grooves or scratches should be polished with a fine emery cloth. It is also important to verify that the disc cannot be forced sideways against the outlet side of the waterway bore and become jammed in that position.

8.1.5 Supplementary Instructions for Soft-Seated Piston Check Valves

Velan soft-seated piston check discs come in three basic designs.

1. **EPDM seat**: If replacing an EPDM seat *(Figure 8.1A)*, remove tack weld or staked area by grinding or filing. Carefully unscrew the disc nut (16) from the disc. Remove the seat holder (71), then the EPDM soft seat (72A). Thoroughly clean the piston disc soft seat area and disc post threads, removing any burrs and or particles of foreign matter. Install a new EPDM seat, replace seat holder and screw on the disc nut.

   NOTE: The disc nut should be tightened metal-to-metal to protrude through the soft seat 1/32 to 1/16" (0.8 – 1.6 mm). To prevent the disc nut from unscrewing, it should be tack-welded or staked.

2. **CTFE or PTFE seat**: If replacing a CTFE or PTFE seat *(Figure 8.1B)*, carefully unscrew the disc nut (16) from the disc. Remove washer (57) and soft seat (72B). Clean the piston disc soft seat area and disc post threads. Install a new CTFE or PTFE seat, replace washer, screw new self-locking nut with torque given in *Table 8.1*.

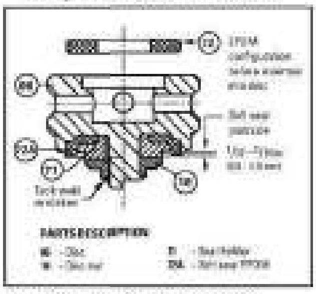

Figure 8.1A *Piston disc with a replaceable EPDM soft seat.*

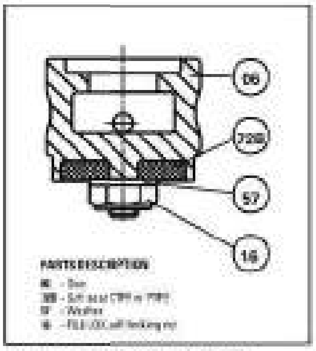

Figure 8.1B *Piston disc with replaceable CTFE or PTFE soft seat.*

Table 8.1 *Locking nut torques*

Size in	(mm)	Nut size	Torque ft·lb	(N·m)
½ – ¾	(15-20)	#10 - 32 UNF	40	(4.5)
1	(25)	#10 - 32 UNF	40	(4.5)
1¼ – 1½	(32-40)	¼ - 28 UNF	70	(7.9)
2	(50)	5/16 - 24 UNF	110	(12.4)

8.1.6 Fitting of Repaired Parts: Swing Check Valves

After the seating faces of the disc and seat have been relapped and cleaned with a suitable cleaning fluid, such as acetone or alcohol, the results of the lapping must be verified by a blueing test to check for full circumferential contact. A light coating of blueing ink should be distributed smoothly and equally over the seating surface of the disc. Slowly lower the disc with hanger into the body. Insert the hanger into the hanger seat hole, and match up with pin hole, while holding the disc away from seat. Insert the pin (61) slowly. Release the disc and press firmly against the seat. Remove the pin (61) *Figure 2.5B*. Pull out hanger with disc and check for position contact.

8.2 DISASSEMBLY OF CHECK VALVES

8.2.1 General

Total disassembly: valve internal problems, spiral wound gasket, disc, etc.

> **CAUTION**: Make sure all pressure has been relieved from both sides of the valve before starting disassembly work.

8.2.2 Disassembly of Small Bolted Cover Piston Check, Stop Check, and Ball Check Valves

The disassembly instructions below cover all of Velan's small bolted cover piston or ball check and stop-check valves. As the general disassembly progresses, place matching marks on parts so that the same parts will be used at reassembly (refer to Figures 8.2A and 8.2B).

1. Remove cover/bonnet cap screw nuts (98).

   NOTE: If a valve has been in high-temperature service for extended periods of time, the cap screw nuts may be seized to the body (studs). Tight nut threads can sometimes be loosened by applying penetrating oil or applying heat to the nut and working it free. As a last resort, a hacksaw, cutting torch or a cold chisel can be used to cut nut away from stud.
2. Once all the cap screws (nuts) are removed, the entire cover can be lifted off the valve body as shown in *Figures 8.2A, 8.2B, and 8.2C*.
3. Remove used spiral wound gasket (19).
4. Lift spring (40) and piston disc or ball (06).
5. The valve is now ready for inspection and seat repairs.

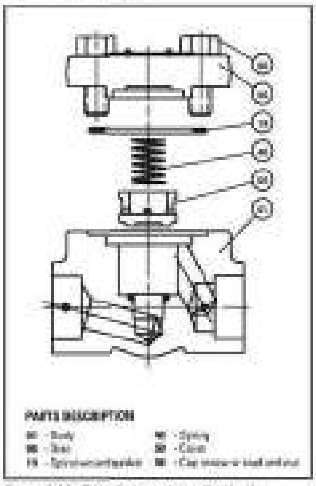

Figure 8.2A *Bolted cover piston check valve exploded view*

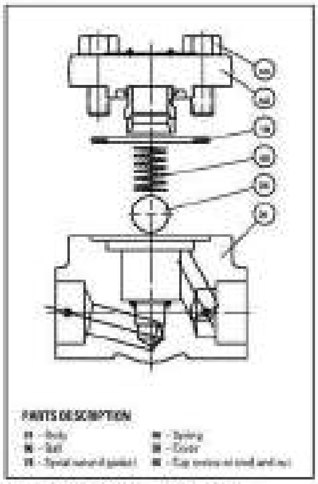

Figure 8.2B *Bolted cover ball check valve exploded view*

5. During inspection, check the condition of the body cover cap screw studs (06). Studs may have been damaged when removing seized nuts or when lifting the cover. If studs are damaged, remove and replace them as follows:
   a) Screw on two nuts.
   b) Lock the bottom nut to the top nut.
   c) Turn the bottom nut to remove the stud.
   d) Apply anti-seize compound to the new stud.
   e) Screw in the stud and tighten.

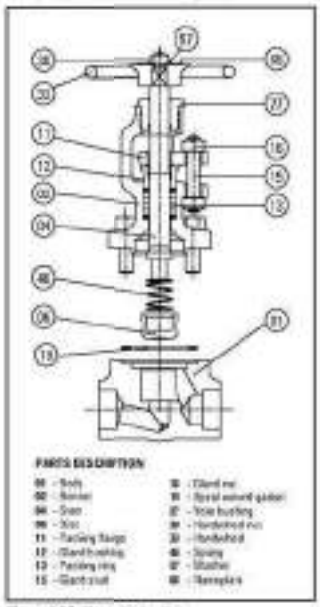

Figure 8.20 Stop-check valve exploded view

8.23 Disassembly of Swing Check Valves

The disassembly instructions below cover all of Valve's small bolted cover swing check valves. as a general disassembly progresses follow Section 8.2.2, steps 1 to 3, refer to Figure 2.18 Swing check valve.

4. Remove lock pin (01).

NOTE: It may be necessary to use a pair of pliers or vise grip and pull pin while rocking back and forth. With the pin removed, pull out hanger (31) together with the disc (08). Please note, it may be necessary to twist back and forth while pulling hanger/disc towards downstream. Once the hanger and disc have been removed from valve body, the disc and hanger can be disengaged by sliding out hinge pin (34).

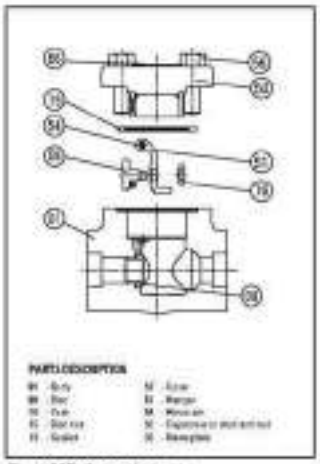

Figure 8.20 Swing check valve exploded view

5. The valve is now ready for inspection and non-disc repairs.
6. During inspection, check the condition of the body-cover cap screw studs (06). Studs may have been damaged when removing seized nuts or when lifting the cover. If studs are damaged, remove and replace them as follows:
   a) Screw on two nuts.
   b) Lock the bottom nut to the top nut.
   c) Turn the bottom nut to remove the stud.
   d) Apply anti-seize compound to the new stud.
   e) Screw in the stud and tighten.

8.3 REASSEMBLY OF CHECK VALVES

8.3.1 General

The reassembly procedures are not as detailed as the disassembly procedures since an check valve the reverse procedure is required.

1. The most important consideration is the cleanliness of all parts. Rust and dirt should be removed from all parts with a wire brush or emery cloth. Oil and grease should be removed with suitable solvents.
2. Threaded parts (cap screws, nuts, studs) must be well lubricated. Recommended lubricants can be found in Table 4.2.
3. Repaired or replaced parts must be checked to make sure that repair procedures have been done and that replaced parts (e.g., spiral wound gasket, etc.) have been checked for size so that they will fit into the valve you are servicing.
4. All orientation marks assigned during disassembly must be observed so that correct assembly is maintained.

8.3.2 Reassembly of Piston Check, Stop Check, and Ball Check Valves

1. Install piston disc or ball (08) and spring (06) in valve.
2. Place new spiral wound gasket (19) in recess on top mounting face of body.
3. Line up the cover/bonnet (03) with the body (01) and lower into the body. It is extremely important to prevent damage to the gasket when aligning the cover/bonnet.
4. Apply recommended lubricant to body-cover/bonnet cap screws (studs and nuts), and then install. Tighten body-cover/bonnet cap screws (nuts) in strict accordance with the torque procedure found in Section 6.2 and Table 6.2 of this manual.

8.3.3 Reassembly of Swing Check Valves

Install disc (08) and hanger (31) with hinge pin (34) lower into body insert hanger into seat hinge hole and line up with pin hole. Insert pin (01) and proceed with body cover reassembly. Follow Section 8.2.2, steps 2 to 4 to complete assembly.

9.1 WELDED BONNET GATE, GLOBE AND CHECK VALVES

Welded bonnet valves can be repacked and the top works serviced in the same way as bolted bonnet valves. However, the servicing of the sealing base or back seat can only be achieved by removing the bonnet assembly, which is threaded into the body and welded. This section provides a method for removing the bonnet without the necessity of cutting the valve from the line (Figures 9.1A, B 1B and 9.1C).

9.1.1 Disassembly

When Velan welded bonnet valves are serviced because of a damaged seat or backseat, the weld between the body and the bonnet must be carefully cut off, using an electric hand grinder with a flat cutting wheel. Once the weld is removed, the bonnet can be unscrewed from the body.

Tight body-bonnet threads are sometimes to loosened by applying penetrating oil to threads and by tapping the side of the body using a mallet while unscrewing the bonnet. If valves have been in high temperature service for extension periods of time, the bonnet may be seized to the body, and it may be necessary to heat the body and bonnet to free them.

Servicing of internal components is the same as for bolted bonnet valves, described in Sections V to VII.

9.1.2 Reassembly

Relap the seats and apply blueing ink to check final results. Then tightly thread the bonnet assembly into the body and weld the body bonnet joint in accordance with an applicable Velan welding procedure.

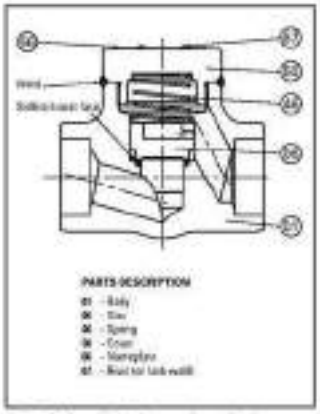

Figure 9.1A Welded cover piston check

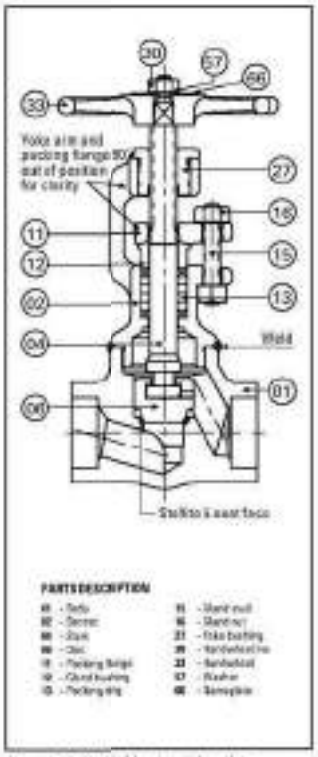

Figure 9.1B Welded bonnet globe valve

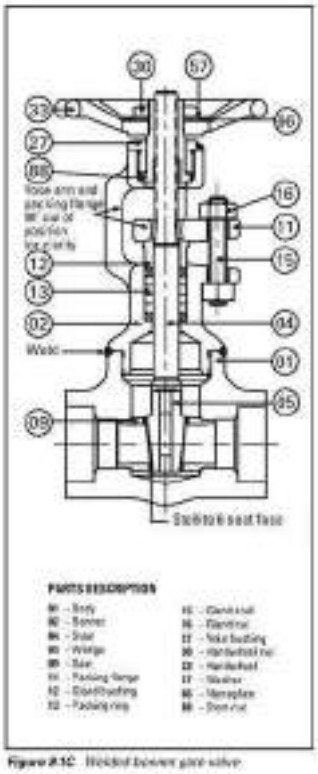

Figure 9.1C Welded bonnet gate valve

TERMS AND CONDITIONS OF SALE

CONTRACT: Orders are subject to acceptance by the Velan Companies hereinafter referred to as the Seller. No terms or conditions of Purchaser's order contrary to the Seller's terms and condition shall be binding upon the Seller unless specifically agreed to by the Seller in writing.

MINIMUM ORDER CHARGE: $500.00 net.

PRICES: All quoted prices are subject to change by the seller without prior notice and, unless otherwise stipulated by Seller, are understood to be F.O.B. Seller's plant with delivery to carrier constituting delivery to purchaser. Right to possession of the material to secure the payment of the purchase price shall remain in Seller until all payments therefore shall have been fully made. For the protection of the Purchaser and the Seller, verbal customer orders must be confirmed by a formal written purchase order. If a written purchase order is not received within ten days of a verbal order, product descriptions, quantities, specifications, etc., as set forth in Seller's acknowledgement and invoice shall be considered as binding on both parties. Any order that is shipped before receipt of confirmation which might have been entered incorrectly and would require remedial action would be for the Purchaser's account.

TAXES: All prices are exclusive of taxes. Sales, use and other taxes, by whomsoever levied, are to be paid by the Purchaser, and unless invoiced, are to be paid by the Purchaser directly to the appropriate governmental agency.

DELIVERY: Delivery or shipment specified is Seller's best estimate and Seller shall not be liable for delay in deliveries resulting from any cause whatsoever. Failure to ship on or near the estimated date shall not entitle Purchaser to cancel the order without charge.

RETURN OF MATERIALS: Materials may be returned only with prior written agreement of Seller.

CANCELLATION: Cancellation of orders may be made only with the Seller's written consent and Purchaser shall be subject to cancellation charges.

PRODUCT WARRANTY: Seller warrants the equipment of its own manufacture to be free of defects in material and workmanship, under normal use and proper operation for a period of one year from the date of shipment from Seller's plant. Seller's obligation under warranty shall be strictly limited, at Seller's option, to: (i) furnishing replacement parts for or repairing without charge to Purchaser, F.O.B. Seller's plant or (ii) issuing written authorization for Purchaser or others to replace or repair without charge to Purchaser, at costs comparable to Seller's normal manufacturing costs those parts proven defective, or (iii) in discharge of Seller's maximum liability herewith, refunding all monies paid by Purchaser to Seller for the Product and, at discretion of Seller, having the product removed and returned to Seller at Purchaser's expense. All transportation charges relative to corrective work, defective parts or replacement parts shall be borne by Purchaser. Purchaser shall give Seller immediate notice upon discovery of any defect. The undertaking of repairs or replacements by Purchaser or its agents without Seller's written consent shall relieve seller of all responsibility herewith.

Finished materials and accessories purchased from other manufacturers are warranted only to the extent of the manufacturer's warranty to Seller.

Any alteration in material or design of Seller's product or component parts thereof by Purchaser or others without written authorization by Seller voids all obligations of Seller regarding the product and any associated warranty herein stated or implied.

Seller's sole liability shall be exclusively as set forth herein, and Seller shall not be liable for any incidental or consequential damages due to its breach of any warranty herein contained, or otherwise. Without limitation to the foregoing, in no event shall Seller be liable for the loss of use of the product or of any other product, process, plant, equipment, or facilities of the Purchaser or end user whether partially or wholly due to defects in material and / or workmanship and / or design of Seller's product, and in no event shall Seller be liable for removal of appurtenances or incidentals such as connections, pipe work and similar items of obstruction or for any cost brought about by the necessity of removing the product from its point of installation.

Seller makes no warranty of any kind whatsoever, expressed or implied, other than is specifically stated herein, and there are no warranties of merchantability and/or fitness for a particular purpose which exceed the obligations and warranties specifically stated herein.

Parts furnished without charge as replacements for original parts under warranty are warranted for that period of time during which the original parts warranty is effective.

ALL SHIPMENTS WILL BE F.O.B. PLANT LOCATION. SHIPMENTS WILL BE MADE VIA MOST ECONOMICAL CARRIERS UNLESS OTHERWISE REQUESTED. TERMS: NET 30 DAYS FROM DATE OF INVOICE. 1½% PER MONTH OF ALL OVERDUE ACCOUNTS. ALL TAXES EXTRA. PRICES SUBJECT TO CHANGE WITHOUT NOTICE.

MANUFACTURING PROGRAM

Valve Product Line	Size		Pressure Class	Applicable Specifications
	NPS	DN		
Forged pressure seal and bolted bonnet gate, globe, and check valves	2 – 24	50 – 600	PS: ASME 600 – 4500 BB: ASME 150 – 1500	ASME B16.34
Small forged steel gate, globe, and check valves	¼ – 2	8 – 50	ASME 150 – 4500	API 602 ASME B16.34
Forged steel Y-pattern globe valves	½ – 4	15 – 100	ASME 600 – 4500	ASME B16.34
Cast steel gate, globe, and check valves	2 – 56	50 – 1400	ASME 150 – 1500	API 600
Cast stainless steel gate, globe, and check valves	¼ – 24	8 – 600	ASME 150 – 600	API 603 ASME B16.34
Dual plate check valves	2 – 60	50 – 1500	ASME 150 – 2500 API 6A 2000 – 5000	API 594
All stainless steel knife gate valves	2 – 36	50 – 900	150 psig @100° F	TAPPI TIS 405-8 MSS SP-81
Memoryseal® ball valves	¼ – 24	8 – 600	ASME 150 – 600 up to 2000 WOG	ASME B16.34
General purpose ball valves	¼ – 2	8 – 50	800 – 3000 WOG	Up to ASME B16.34
Metal seated ball valves	½ – 48	15 – 1200	ASME 150 – 4500	ASME B16.34
Triple offset valves	3 – 48	80 – 1200	ASME 150 – 600	API 609 ASME B16.34
Bellows seal gate and globe valves	½ – 12	15 – 300	ASME 150 – 2500	ASME B16.34
Cryogenic gate, globe, check, ball, and butterfly valves	½ – 80	10 – 2000	ASME 150 – 1500	ASME B16.34

Headquartered in Montreal, Canada, Velan has several international subsidiaries. For general inquiries:

Velan head office
7007 Côte de Liesse
Montreal QC H4T 1G2 Canada
Tel: (514) 748-7743 **Fax:** (514) 748-8635

[illegible]

Check our website for more specific contact information:
www.velan.com

VELAN

PRINTED IN CANADA

PENTAIR

Global Projects

Document Summary

11-Nov-2016

Customer / End-User:	VOGT Power International
Project Name:	V17491 - Arauta ABPRS
Customer Purchase Order:	V0010862
Pentair Sales Order:	T367310

Pentair Document Number:	T367310-J01-003	
Vogt Document Number:	-	
Document Description:	Operation and Maintenance Manuals - Intervalve	
Drawing Number:	-	
Revision:	0	
Item No.:	20 - Erection/Installation drawings and/or manuals 21 - Operation and Maintenance Manuals, incl. Sub-Vendor Literature	
Tag Number(s):	51HAH10AA002 52HAH10AA002 51HAH10AA001 52HAH10AA001 51HAH10AA103 52HAH10AA103 51LAB10AA102	52LAB10AA101 51LAB10AA001 52LAB10AA001 05LAB24AA007 05LAB25AA007 05LAB26AA007

Notes:

VOGT POWER INTERNATIONAL
V17491-PVXE-525-00
11-Nov-2016

VOGT POWER INTERNATIONAL
[illegible]
[illegible] | [illegible]

[illegible]

PENTAIR

INTERVALVE

Pressure Seal Check Valves - Style A
Installation and Maintenance Instructions

Cast Check Valves Pressure Seal -Style A- Swing Check and Tilting Disc Configuration

Contents

1 Valve Storage
1.1 Preparation and Preservation for Shipment
1.2 Handling Requirements
1.3 Storage and Preservation before Installation
2 Installation
2.1 Preparation before Installation
2.2 Installation Instructions
2.3 Valve Verification before Start up
2.4 Operation Instructions
Table 1 Bolt torque to ensure tightness of pressure seal gasket
2.5 Periodic Valve Verification during Service
Troubleshooting Guide
3 Maintenance
3.1 Pressure Gasket Replacement
4 Valve Removal
5 Special Tools

Section 1 - Valve Storage

1.1 Preparation and Preservation for Shipment

All valves are properly packed in order to protect the parts that are subject to deterioration during transportation and storage on site. In particular, the following precautions should be taken:

1. The weld ends surface shall be protected with suitable protective like Deoxaluminite. The end shall be closed with plywood or plastic disc fixed to the edge by tacks.
2. The type of packing must be defined in the Customer's Order and shall be appropriate to ensure safe transportation to final destination and eventual conservation before installation.

1.2 Handling Requirements

A - Packed Valves

Crates: Lifting and handling of the packed valves in crates will be carried out by a fork lift truck or by means of the appropriate fork hooks.

Cases: The lifting of packed valves in cases should be carried out in the lifting points and at the center of gravity position which have been marked. The transportation of all packed material must be carried out safely and following the local safety regulations.

B - Unpacked Valves

1. The lifting and the handling of those valves has to be carried out by using appropriately chains and/or respecting the Slinging Points. The handling must be carried out on pallets, protecting the machined surfaces to avoid any damage.
2. With valves of large dimensions, the lifting and the hooking of the load must be carried out using the appropriate Basic Systems (hook, brackets, ropes) and tied balancing bars in order to prevent them from falling or moving during the lifting and handling.

www.pentair.com/valves

Valve slinging

Figure no. 1

1.2 Storage and Preservation before Installation

In case the valves have to be stored before installation, the storage has to be carried out in a controlled way, and has to be performed in accordance with the following criteria:

1. The valves have to be stored in a closed, clean and dry storage room.
2. The discs must be in the closed position, and the shut faces must be protected with plastic or rubber discs fixed with straps. Moreover, keep the original protection.
3. Periodical checks were to be carried out in the storage area to verify that the above mentioned conditions are maintained.

Note

Storage in an open area for a limited period can be considered only in case the valves have appropriate packing packed in cases made with tarred paper, and containers well protected with tarp or canvas.
Do not place management packages directly on the ground.
Do not expose management packages to the weather or directly to the sun.
Check the packaging every two months.

Caution

For valve handling and/or lifting, the lifting equipment (hardware, ropes, etc) must be used and selected while taking into account the valve weight indicated in the packing list (note delivery note, lifting and handling must be made only by qualified personnel.
Caution must be taken during the handling to avoid that the equipment gripes over the workers or over any other place where a possible fall could cause damage. In any case, the local safety regulations must be respected.

Warning

For valve handling and/or lifting, the lifting equipment (hardware, ropes, etc) must be used and selected while taking into account the valve weight indicated in the packing list (note delivery note, lifting and handling must be made only by qualified personnel.
Caution must be taken during the handling to avoid that the equipment gripes over the workers or over any other place where a possible fall could cause damage. In any case, the local safety regulations must be respected.

2.1 Preparation before Installation

1. Carefully remove the valve from the shipping package (box or pallet) avoiding any damage to the valve.
2. Check the inside of the valve (ports) as one. Ensure that there are no solid objects such as plastic or wood, plastic or packing material within the valve or in the valve seat.
3. Confirm that the materials of construction listed on the valve corresponds service and temperature are appropriate for the service intended and are as specified.
4. Define the (vertical) mounting orientation with respect to the system pressure. The arrow on the body identifies the upstream side (high pressure) and downstream side (low pressure).

Warning

Verify that the direction of the flow in the line corresponds to the arrow indicated on the valve body.

2.2 Installation Instructions

Check valves are normally installed in horizontal pipe, but can also be installed in vertical pipe with upward flow.
For a vertical installation, the pipe recommends that the valve shall be installed and assembled following the indications in fig. 2.
This can help minimize any problems associated with solid particles present in the fluid that otherwise could deposit in the lower part of the body and be detrimental for the complete closure. Unless otherwise recommended by Intervalve, the valve should be installed with the disc in the closed position, to ensure that the seat ring is the disc is not damaged during installation.
For operating temperatures above 200°C (392°F), thermal insulation of the valve body is recommended.
Handling and lifting of the valves during installation MUST be performed following the same criteria and instructions described in previous points "1.2 Handling Requirements" and "1.3 Storage and Preservation before Installation".

Butterfly Valves

Position the valve and check the alignment with the pipe, then proceed with welding, in accordance with the applicable welding procedure.

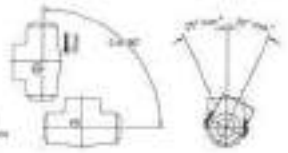

Figure no. 2
Installation versions recommended

Table 2. Bolt Torque to Ensure Tightness of Pressure Seal Gasket

Pressure 16 for Check Valves

Size	Torque ft-lbs	Torque Nm
[illegible]	[illegible]	[illegible]
[illegible]	[illegible]	[illegible]
[illegible]	[illegible]	[illegible]
[illegible]	[illegible]	[illegible]
[illegible]	[illegible]	[illegible]
[illegible]	[illegible]	[illegible]
[illegible]	[illegible]	[illegible]
[illegible]	[illegible]	[illegible]
[illegible]	[illegible]	[illegible]

Important

To ensure tightness of Pressure Seal gasket, pull up bolts must be tightened when valve is under fully hydraulic test pressure.

Important

After the valve installation and before the line testing, it is recommended to perform an accurate cleaning of the lines to eliminate dirt and any foreign objects that could seriously damage the tightness between seat/disc and the correct operation of the valve.

2.3 Valve Verification before Start Up

1. If the valve has been placed for a long time, check the bolt torque for leaking joint, fit as accordance with table 1.

Important

If piping system is pressurized with water for testing and in case the piping system has been installed for after testing for a long time, the following recommendations should be adopted:

a. Use corrosion inhibitor with water to protect the piping system.
b. After testing, the piping system should be depressurized and the bolt water completely drained.

2.4 Operations Instructions

1. Store in Series Check valves do not require special care to work properly.
2. The following instructions are only provide confidence and long life service.
3. Make sure to perform periodic valve verification as described in paragraph 2.5

2.5 Periodic Valve Verification during Service

A - Normal Check

1. Verify monthly that there is no leakage from the bonnet/bonnet area. If the leakage has been detected from the bonnet/bonnet area, tighten the nut/gasket. Do as indicated in Table 1 if the leakage does not stop, follow the maintenance procedure for the replacement of the valve bonnet gasket (2.2, 2.3).

B - Preventive Actions

1. Every 6 years disassemble the critical service valves, verifying the sealing surfaces and lap them again which necessary. Substitute the bonnet gasket.

Symptoms	Possible Causes	Solutions
Body/Bonnet leaking	1. Gasket sealing faces (pos.20) 2. Gasket damaged	1. Tighten sealing nut (N) 2. Replace gasket
Valve leaking	1. Valve not fully closed 2. Debris trapped in valve 3. Sealing surface damaged	1. Push valve in order to close it 2. Cycle and flush with valve open to enhance debris 3. Recondition the sealing surface

The Style A Series Valves have been designed to require minimum maintenance.
Preventive maintenance only requires as:
- Bonnet/Bonnet Gasket Replacement

All the other repairs should be performed by Intervalve or Authorized Service Company.

2.1 Bonnet Gasket Replacement

Warning

Before starting any maintenance, depressurize, drain and cool the line. Check that the valve will not be pressurized.
Failure to do so may cause serious personnel injury and/or equipment damage.

Please refer to Figure no. 3
1. Unscrew the nut (pos.3).
2. Remove the retaining ring (pos.19)
3. Remove the segment rings, push them out from the body groove by using the body hole present radially on the top of the body.
4. Lift up the bonnet (pos.8) and pressure seal body gasket (pos.5)
5. Carefully clean all the gasket housing and surfaces with suitable grease.
6. Replace the body gasket.
7. Reassemble all parts following backwards the above mentioned steps.

Caution

The main pos.20 need to be retightened after valve first pressurization, as indicated in Table 1.

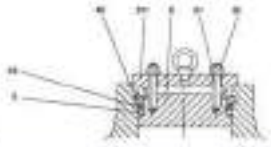

Fig. no. 3

2.2 Valve Disposal

If the valve needs to be removed from the line for some maintenance reason, the user should ensure the following:

1. The valve is depressurized (drained and)
2. The pipe ends are ready for fitting from the valve as possible.

2.3 Spare Parts

No special tool required for the Maintenance/Operations described in this Manual.

PENTAIR

INTERVALVE

Cast Gate Valves Pressure Seal -Style A-
Wedge Gate and Parallel Slide Configuration

1	**Valve Storage**	1
1.1	Preparation and Preservation for Shipment	1
1.2	Handling Requirements	1
1.3	Storage and Preservation before Installation	1
2	**Installation**	2
2.1	Preparation before Installation	2
2.2	Installation Instructions	2
2.3	Valve Verification before Start Up	2
2.4	Operations Instructions	2
	Table 1. Bolt Torque Figures for Packing Bolts	2
	Table 2. Bolt Torque to Ensure Tightness of Pressure Seal Gasket	2
2.5	Periodic Valve Verification during Service	2
	Troubleshooting Guide	3
3	**Maintenance**	3
3.1	Packing Maintenance	3
3.2	Bonnet Gasket Replacement	3
4	**Valve Removal**	3
5	**Drawers and Special Tools**	4
5.1	Drawing	4
	Table 3. Drawer and Lubricant List	4
5.2	Special Tools	4

1.1 Preparation and Preservation for Shipment

All valves are shipped packed in order to protect the parts therein subject to deterioration during transportation and storage or use. In particular, the following precautions should be taken:

1. The valves must be packed with the wedge in the closed position.
2. The metal-metal surface shall be protected with suitable protective film (Nexco coating). The end shall be closed with plywood or plastic disc fixed to the edge by straps.
3. All actuated valves must be provided, as only optional or upon order request that the work of actuator (especially pneumatic piping or hydraulic) do not interfere beyond the end plate.
4. The type of packing must be delivered to the Customer's Order and shall be appropriate to ensure safe manipulation of that description and eventual intermediate storage installation.

1.2 Handling Requirements

A - Packed Valves

Cases: Lifting and handling of the packed valves in cases within can be out by a fork lift truck, by means of the appropriate fork. Hooks.

Cases: The lifting of packed valves in cases should be carried out in the lifting points and at the number of pieces written which have been marked. The manoeuvrer of accepted material must be carried out safely and following the local safety regulations.

B - Unpacked Valves

1. The lifting and the handling of these valves has to be carried out by using appropriate means and a sequencing the carrying hooks. The handling must be carried out no jerkily, preventing the maximum surface to avoid any damage.
2. Note: areas of large dimensions, the lifting and the handling of the load must be carried out using the appropriate tools (brackets, hook, eyebolts, slings) and that balancing state in order to prevent them from falling or moving during the lifting and handling.

www.pentair.com/valves

Valve shipping

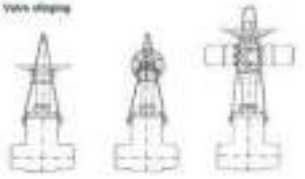

Figure no. 1

1.2 Storage and Preservation before Installation

In case the valves have to be stored before installation, the storage has to be carried out in a controlled way, and has to be performed in accordance with the following criteria:

1. The valve has to be stored in covered place and dry storage room.
2. The wedge must be in the closed position, and the seat faces must be protected with plastic or rubber faces (hard with scraps. Avoiding loose metal protection).
3. Periodical checks have to be carried out in the storage area to verify that the above mentioned conditions are appropriate.

For actuated valves, in addition to the above, please refer to the warnings in the manual of the actuator.

Note

Storage in an open area for a limited period can be considered only in case the valves have appropriate packing (packed in cases made with tarred paper, and corners well protected with metal sands).

Do not place consignment packages directly on the ground.

Do not expose consignment packages to rain weather or directly to the sun.

Check the packaging every two months.

Lifting

For valve handling (crane lifting, the lifting equipment (slackers, ropes, etc.) must be rated and selected while taking into account the valve weight indicated in the packing list and/or delivery note. Lifting and handling must be made only by qualified personnel.

Do not use the lifting points located on the actuator. If any, or lift the valve. These lifting points are for the actuator only.

Caution must be taken during the handling to avoid that the equipment passes over the operators or over any other place where a possible fall could cause damage. In any case, the local safety regulations must be respected.

Section 2 - Installation

2.1 Preparation before Installation

1. Carefully remove the valve from the shipping package then in order working any damage to the valve or, in case an automatic valve, to the electric or pneumatic/hydraulic actuator or instrumentation.
2. Make the seats of the valve using an air flow. Ensure that there are no extraneous such as pieces of wood, plastic or packing materials within the valve or in the valve seat.
3. Confirm that the materials of construction noted on the valve nameplate (service and temperature) are appropriate for the service intended and as specified.
4. Define the preferred mounting orientation with respect to the system pressure. Fairly speaking on this basis, identify the upstream side (high pressure) and downstream side (low pressure).

Warning

Verify that the direction of the flow is the one corresponding to the arrow indicated on the valve body. Valves without the arrow are bi-directional.

See the actuator user manual for the actuator preparation.

2.2 Installation Instructions

Gate valves are normally installed in horizontal pipe with vertical stem.

These valves can also be installed in vertical or horizontal pipe with stem axis inclined, but this may require special considerations depending on other site service condition, material and type of operation.

For a bi-directional operation, Manufacturer recommends that the valve shall be installed and oriented following the indications of fig. 2.

This can help minimize any problem associated with solid particles present in the fluid that otherwise could deposit in the lower part of the body and be detrimental to the wedge complete closure.

Where otherwise recommended by Manufacturer, the valve should be installed with the wedge in the closed position, to ensure that the seat ring in the wedge is not damaged during installation. Particular care should be taken with these valves equipped with "hot seat" actuators.

The operating temperature where BOST (BBPV) Elastomer installation of the valve body is recommended.

Handling and lifting of the valves during installation MUST be performed following the same criteria and instructions described in previous paragraph "1.2 Handling Requirements" and "1.3 Storage and Preservation before Installation".

Buttweld Valves

Position the valve and check the alignment with the pipe. Weld proceed with welding, in accordance with the applicable welding procedures.

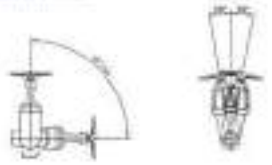

Figure no. 2
Installation positions recommended

Important

After the welding installation and before the line testing, it is recommended to perform an accurate cleaning of the line to eliminate dirt and any foreign objects that could seriously jeopardize the tightness between seat/disc and the correct operation of the valve.

2.3 Valve Verification before Start Up

1. Tighten the packing gland enough to prevent valve leakage. Stop tightening will damage packing and increase operating torque. The half torque figures for the packing nuts can be calculated as indicated in Table I.
2. Check the operation of the valve by working it to "full open" and "full closed".
3. If the valve has been stored for a long time, check the bolt torque for packing nuts. Do in accordance with table II.

Important

If pump system is pressurized with water for testing, and in case the pumping system has been shut down after testing for a long time, the following recommendations should be adopted:

- Use corrosion inhibitor with water to pressurize the piping system.
- After testing, the pump system should be recommended and the non-water completely drained.

2.4 Operation Instructions

1. Gate A Series Gate Valves do not require special care in each operation.
   The following instructions will help provide a satisfactory and long life service.
2. Make sure to perform periodic valve verification as described in paragraph 2.3.
3. In case of actuated valves always follow the specific instructions given by the actuator's manufacturer.
4. Never change the setting of torque and/or limit switches which have been carefully set during the final test or manual workings.

Section 3 - Maintenance

For Gate A Series Valves many been designed to ensure minimum maintenance.

Pro. Manual Gate Valve on-site repair is:

- Packing Replacement
- Stuffing-box Gland Replacement

All the other repairs should be performed by Manufacturer or Manufacturer's Company.

3.1 Packing Maintenance

If leakage is observed through the packing, tighten the gland nut slowly and repeat until the leakage stops.

Caution

Do not over tighten packing gland nuts. Over tightening will increase the torque required to operate the valve.

When tightening the gland nut, use minimum movements until leakage has stopped.

Please refer to Figure no. 4.

To replace the packing proceed as follows:

Warning

Before working any maintenance, depressurize, drain and vent the line. Unless that the valves are not in hazardous atmosphere, disconnect any electrical power supply.

Failure to do so may cause serious personal injury and/or equipment damage.

1. Open completely the valve up to the take out position.
2. Remove the nuts (4) of the gland nuts (5).
3. Lift the gland flange (10) and the gland (8).
4. Remove the worn out packing using a packing unit.
5. For a better lubrication, proceed to an accurate cleaning of the stem and stuffing box and make sure there are no scratches or signs of wiping.
6. The repacking shall be carried out by placing one ring at a time around the stem, inside the stuffing box and by making sure the rings are correctly oriented. Proceed in this the bottom ring (1 figure no. 3).
7. When the stuffing box is filled, replace the gland (8) and gland flange (10) in their original position.
8. Tighten gland nuts in accordance with Table I (Bolt Torque figures for Packing Rings).
9. Cycle the valve.
10. Pressurize the line.
11. If leakage is detected, tighten the gland nuts slowly and carefully until the leakage stops.

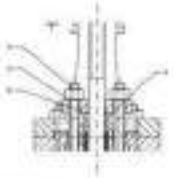

Figure no. 4

3.2 Bonnet Gasket Replacement

Warning

Before starting any maintenance, depressurize, drain and vent the line. Check that the valves are not in hazardous atmosphere, disconnect any electrical power supply.

Failure to do so may cause serious personal injury and/or equipment damage.

Section 4 - Appendix

Table I - Torque Values

For Stem pressure < 2900 psi	For Stem pressure > 4000 psi
Torque Ft lbs = (Stem Area / 2) x (P / 12)	Torque Ft lbs = (P / 12) x (Stem Area / 2)

Torque Nm = Torque Ft lbs x 1.3558

Where:

- Stem Area (in)
- P = Stem Open (in)
- = Stem Diameter (in)
- = Stem Pressure (psi)

The "Torque method" may result in more or less than 20% compression.

Table II
Bolt Torque Values for Pressure Seal Gate Valves

Position 3 for Gate Valves

Stem	Torque Ft lbs	Torque Nm
3/8	15	20.3
1/2	37	50
5/8	74	100
3/4	125	170
1	295	400
1 1/4	590	800
1 1/2	885	1200
1 3/4	1327	1800
2 1/2	2212	3000

2.5 Periodic Valve Verification Working Service

A - Minimal Check

1. Verify monthly that there is no leakage from packing or in the body/bonnet area. If the leakage has been detected from the packing, tighten nut according to the procedure described in Section 2.
   If the leakage does not stop, follow the procedure for packing maintenance (3.1).
   If the leakage has been detected from the body/bonnet, tighten the nuts (see, 10 as indicated in Table I).
   If the leakage does not stop, follow the maintenance procedure for the replacement of the body/bonnet gasket (3.2).
2. Every 2 / 3 months, depending on operating frequency, verify the greasing of bearings and stem thread.
3. For actuated valves, in addition to the above, please refer also to the warnings in the actuator manual.

B - Preventive Actions

1. Every 3 months verify the tightness of gland nuts.
2. Every 6 months on mechanical valves and every 3 months on hand operated valves, grease stem and bearings.
3. Every 12 months check the travel of the gland follower, setting a new packing when the end of the travel is approaching.
4. Every 4 years disassemble the actual service valves and/or actuated valves, verifying the sealing surfaces and top, then open/close functions. Substitute the worn gasket and the packing, grease the stem.
5. For the actuator, procedure indicated in an maintenance manual.

Troubleshooting Guide

Symptom	Possible Cause	Solution
Stem packing leaking	1. Gland flange nuts too loose 2. Packing damaged	1. Tighten gland flange nuts 2. Replace packing (See Paragraph 3.1)
Body/Bonnet leaking	1. Gasket bolting loose (see 10) 2. Gasket damage	1. Tighten bolting (see 10) 2. Replace the gasket
Valve seating	1. Valve not fully closed 2. Debris trapped in valve 3. Sealing surface damaged	1. Close valve 2. Cycle and flush (with valve open) to remove debris 3. Recondition the sealing surface
Jerky operation	1. Packing is too tight 2. An supply insufficient (for actuated valves)	1. Loosen gland nuts (actuated valve: retighten) 2. Increase air supply pressure
Back seat leaking	1. Stem seat damage	1. Replace the back seat

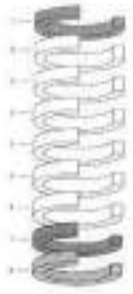

1 = Bottom wiper ring
2 = Die formed graphite (B or B ring)
3 = Metal ring

Figure no. 3

Note

To ensure tightness of Pressure Seal gasket, pull up nuts incorrect tightened which other to within hydrostatic test pressure.

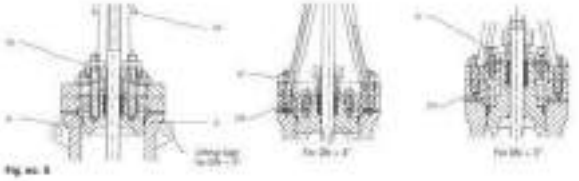

Fig. no. 6

Please refer to Figure no. 6:

1. Unscrew the body bonnet nuts (pos.12) and the gland nuts (pos.9).
2. Lift up the yoke (pos.3) operating by the handwheel or gearbox assembly.
3. When the disk nut is free from the stem threads, lift up the yoke.
4. Unscrew the nuts (pos.7).
5. Remove the retaining ring (pos.17).
6. Remove the segment rings, push them out from the body groove by using the body hole (about whole) or the top of the body.
7. Lift up the bonnet (pos.2) and pressure seal disk (pose pos.6). Make sure were damage the packing. We suggest to replace the packing when changing the body gasket.
8. Clean the inner or the gasket mounting and lubricate with suitable grease.
9. Replace the body gasket.
10. Reassemble all parts following backwards the above mentioned steps.

Caution

The nuts (pos.7) need to be tightened after valve first manoeuvrings, as indicated in Table 1.

Section 2 - Maintenance

If the valve needs to be removed from the line for some extraordinary reason, the user should ensure the following:

1. The valve is depressurized, drained and vent.
2. The valve must be cut so as to keep more the valve as possible.

Section 3 - Lubrication

3.1 Greases

To lubricate the bearings on manualized gearbox operated valves, we suggest to use the grease ASP GREASE PT or an equivalent product, as dressed in the following table:

Manufacturer	Grease
ASP	GREASE PT
API	TGPB
BP	ENERGOLUTO
ESSO	BEACON 2
FINA	FINAMGREASE NF FINAMGREASE FL2
MOBIL	MOBILUX EP2
SH	MARMAGNET 0/2
SHELL	ALVANIA R2 SUPERGREASE A
TEXACO	MULTIFAK EP2 GREASE L2
TOTAL	MULTIS EP2 MULTIS 2
VISCOL	VISCAL POLYEP 2
STATOIL	UNIMAR L2 GR

For the lubrication of the stem threads use the grease GIGNA EPF 2 produced by Fuchs. As an alternative you can utilize:

- 25% of PTFE 3M polytetrafluoroethylene Hostaflon
- GRAFOCOND produced by Fuchs
- Kevlar and use a grease having more than 25% such graphite content (within 98% graphite).

For the lubrication of the actuator, refer to the relevant manual.

3.2 Special Tools

No special tool required for the Maintenance Operation described in this Manual.

PENTAIR

INTERVALVE

Cast Globe Valves Pressure Seal -Style A-

Contents

1	Valve Storage	1
1.1	Preparation and Preservation for Shipment	1
1.2	Handling Requirements	1
1.3	Storage and Preservation before Installation	1
2	Installation	2
2.1	Preparation before Installation	2
2.2	Installation Instructions	2
2.3	Valve Verification before Start-Up	2
2.4	Operational Instructions	2
	Table 1 - Bolt Torque Figures for Flanging Bolts	4
	Table 2 - Bolt Torque to Ensure Tightness of Pressure Seal Bonnet	4
2.5	Periodic Valve Verification during Service	4
	Troubleshooting Guide	5
3	Maintenance	5
3.1	Periodic Maintenance	5
3.2	Bonnet Gasket Replacement	5
4	Valve Removal	6
5	Greases and Special Tools	6
5.1	Greases	6
	Table 3 - Greases and Lubricants List	6
5.2	Special Tools	6

Section 1 - Valve Storage

1.1 Preparation and Preservation for Shipment

All valves are properly packed in order to protect the valve features subject to deterioration during manipulation and storage on site. In particular, the following precautions should be taken:

1. The valves must be packed with the disc in the closed position.
2. The end ends surface shall be protected with suitable protective tin (lacquer/oil). The end shall be closed with plywood or plastic and held on the edge by sticks.
3. All actuated valves must be carefully packed or sealed, in order to ensure that the parts of actuator (electrical/pneumatic valve or accessories) are not exposure to dust and water.
4. The type of packing must be as shown the Customer's Order and shall be appropriate to ensure safe manipulation, in most economic and practical transportation means installation.

1.2 Handling Requirements

A - Packed Valves:

Crates: Lifting and handling of the packed valves in crates will be carried out by a fork lift truck or crane or the lifting points which have been marked. The transportation of packed materials must be carried out safely and following the local safety regulations.

B - Unpacked Valves:

1. The lifting and the handling of these valves has to be carried out by using appropriate means and equipment (including slings). The handling must be carried out on pallets, protecting the machined surfaces to avoid any damage.
2. With valves of large dimensions, the sling and the hooking of the beam must be carried out using the appropriate tools (brackets, hooks, shackles, ropes and that balancing beam in order to prevent them from falling or moving during the lifting and handling.

Valve stinging

Figure no. 1

1.3 Storage and Preservation before Installation

In case the valves have to be stored before installation, the storage has to be carried out in a correctly way, and has to be performed in accordance with the following criteria:

1. The valves have to be stored in a closed, clean and dry storage room.
2. The disc must be in the closed position, and the end faces must be protected with plastic or wooden caps (not with metal). If possible, keep the original protection.
3. Periodical checks have to be carried out in the storage area to verify that the above mentioned conditions are maintained.

For actuated valves, in addition to the above, please refer to the warnings in the manual of the actuator.

Note

Storage in an open area for a limited period can be considered only in case the valve has appropriate packing (packed in paper liner with lined paper, and cardboard and protected with bands/cords).

Do not place consignment packages directly on the ground.

Do not expose consignment packages to the weather or directly to the sun.

Check the packaging every two months.

Caution

For valve handling (valve lifting, the lifting equipment (fastener, hooks, etc) must be adequate selected while taking into account the valve weight indicated in the packing list and/or drawing. Valve lifting point handling must be made only by qualified personnel.

Do not use the lifting points located at the actuator, if any, to lift the valve. These lifting points are for the actuator only.

Position must be taken during the handling to avoid that the equipment causes any the workers or ruin any other asset where a possible fall could cause damage. In any case, the local safety regulations must be observed.

Section 2 - Installation

2.1 Preparation before Installation

1. Carefully remove the valve from the shipping package (box or pallet) avoiding any damage to the valve or, in case of automated valves, to the electric or pneumatic/hydraulic actuator or instrumentation.
2. Clean the inside of the valve using an air jet. Ensure that there are no solid objects such as pieces of wood, plastic or packing material within the valve or on the valve seat.
3. Confirm that the materials of construction listed on the valve nameplates (service and temperature) are appropriate for the service intended and to as specified.
4. Define the preferred mounting orientation with respect to the system pipework. If not determined on the basis, identify the upstream side (high pressure) and downstream side (low pressure).

Warning

Verify that the direction of the flow in the line corresponds to the arrow designed on the valve body.

See the actuator user manual for the actuator installation.

2.2 Installation Instructions

These valves can also be installed in vertical or horizontal pipe with valve other than vertical, but this may require special installation depending on valve size and other conditions, material and pipe orientation.

For a correct operation, it is very recommended that the valve shall be installed and operated following the indications of fig. 2.

This can help trimming and prevent corrosion with solid particles present in the fluid that otherwise could remain in the lower part of the body and be deposited in the low velocity zones, unless otherwise recommended by Intervalve, the valve should be installed with the disc in the closed position, to ensure that the seaming is not damaged during installation. Particular care should be taken with fluid valves equipped with "fail open" actuators.

For operating temperatures above 200°C (392°F) thermal insulation of the valve body is recommended.

The lifting and lifting of the valve during installation MUST be performed following the correct criteria and instructions described in previous points "1.2 Handling Requirements" and "1.3 Storage and Preservation before Installation".

Butweld Valves

Position the valve and check the alignment with the pipe. Start procedure of welding, in accordance with the appropriate welding procedure.

Figure no. 2

Installation positions recommended

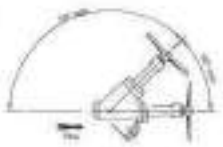

Important

After the valve installation and before the first testing, it is recommended to perform an accurate cleaning of the lines to eliminate dirt and any foreign objects that could seriously prejudice the tightness between seat/disc and the correct operation of the valve.

2.3 Valve Verification before Start-Up

1. Tighten the packing just enough to prevent stem leakage. Over tightening will decrease packing life and increase operating torque. The bolt torque figures for the packing bolts can be consulted as indicated in Table 1.
2. Check the operation of the valve by stroking it to "full open" and "full close".
3. If the valve has been stored for a long time, check the bolt torque for flanging (pos. 10) in accordance with table 2.

Important

If piping system is pressurized with water for testing, and in case the piping system has been shut down after testing for a long time, the following recommendations should be adopted:

a. Use corrosion inhibitor with water in pressurized the piping system.
b. After testing, the piping system should be depressurized and the full water completely drained.

2.4 Operational Instructions

1. Valve in Globe Design Valves do not require special care to work properly. The following instructions will help provide trouble-free and long life service.
2. Make sure to perform periodic valve verification as described in paragraph 2.5.
3. In case of actuated valves always follow the specific instructions given by the actuator's manufacturer.
4. Never change the setting of torque switch that operates when have been carried out during the first bolt in Intervalve workshop.

Table 2
Bolt Torque Values for Packing Gland Flange Bolts

Position 8 Bolt Torque Values

Size	Torque ft.lbs	Torque Nm
3/8	9	12.2
7/16	17	23
1/2	21	28
9/16	30	41
5/8	50	68
3/4	100	136
7/8	150	204
1	230	312
1 1/8	340	460
1 1/4	470	637
1 3/8	610	827
1 1/2	840	1140

Caution

To ensure tightness of Pressure Seal gasket, pull up bolts in order to achieve minimum valve cavity under hydrostatic test pressure.

2.3 Periodic Valve Verification during Service

A - Internal Check

1. Verify visually that there is no leakage from packing or in the bonnet/bonnet area. If the leakage has been detected from the packing, tighten nuts according to the procedure described in Section 2.
   If the leakage does not stop, follow the procedure for packing replacement (2.5).
   If the leakage has been detected from the body/bonnet, tighten the nuts (bolts 20) as indicated in Table 3.
   If the leakage does not stop, follow the maintenance procedure for the replacement of the body/bonnet gasket (3.2 - 3.3).
2. Every 3-5 months, depending on operating frequency, verify the packing all bearings and stem visual.
3. For actuated valves, in addition to the above, please refer also to the warnings in the actuator manual.

B - Preventive Actions

1. Every 2 months verify the tightness of gland bolts.
2. Every 6 months on manual valves and every 3 months on hand operated valves, grease stem and bearings.
3. Every 12 months check the travel of the gland follower, adding a few packing when the end of the travel is approaching.
4. Every 4 years disassemble the critical service valves and/or actuated valves, verifying the sealing surfaces and their wear upon other references. Substitute the bonnet gasket and the packing, grease the stem.
5. For the actuator, preventive indicated in its maintenance manual.

Troubleshooting Guide

Symptom	Possible Cause	Solution
Stem sticking/leaking	1. Gland flange nuts too loose 2. Packing damaged	1. Tighten gland flange nuts. 2. Replace packing (See Paragraph 2.5)
Body/Bonnet leaking	1. Gasket bolting loose (pos.20) 2. Gasket damage	1. Tighten bolting (pos. 20) 2. Replace the gasket
Valve leaking	1. Valve not fully closed 2. Debris trapped in valve 3. Sealing surface damages	1. Close valve 2. Cycle and flush with valve open to remove debris 3. Recondition the sealing surface
Jerky operation	1. Packing is too tight 2. No supply headspace for pneumatic actu.	1. Loosen gland nuts, works valve (engines) 2. Increase or supply pressure
Back seat leaking	1. Back seat damage	1. Replace the back seat

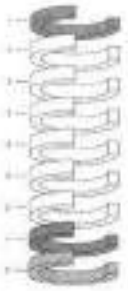

1 - Bonded graphite
2 - Die formed graphite (5 or 6 ring)
3 - Metal ring

Figure no. 3

2.5 Packing Maintenance

If leakage is measured through the packing, tighten the gland nuts evenly and carefully until the leakage stops.

Caution

Do not over tighten packing gland nuts. Over tightening will increase the torque required to operate the valve.
When tightening the gland nut, use half turn increments and leakage has stopped.

Please refer to Figure no. 4.
To replace the packing proceed as follows:

Warning

Before starting any maintenance, depressurize, drain and vent the line, check that the valve are not in temperature, disconnect any electrical power supply.
Failure to do so may cause serious personal injury and/or equipment damage.

1. Open completely the valve up to the backseat position.
2. Remove the nuts (16) of the gland bolts (15).
3. Lift the gland flange (14) and the gland (6).
4. Remove the worn out packing using a packing pick.
5. Fit a better lightness, proceed to an accurate cleaning of the stem and stuffing box and make sure there are no scratches or signs of packing.
6. The replacing shall be carried out by placing one ring at a time around the stem, inside the stuffing box and by ensuring sure that there are carried overlap. Place it into the bottom (refer to Figure no. 3).
7. When the stuffing box is filled, replace the gland (6) and gland flange (14) in their original position.
8. Tighten gland nuts in accordance with Table 1 (Bolt Torque Figures for Packing Bolts).
9. Close the valve.
10. Pressurize the line.
11. If leakage is detected, tighten the gland nuts evenly and carefully until the leakage stops.

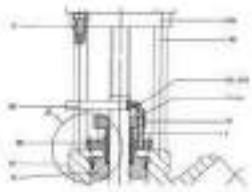

Figure no. 4

2.6 Bonnet Gasket Replacement

Warning

Before starting any maintenance, depressurize, drain and vent the line, check that the valves are not in temperature, disconnect any electrical power supply.
Failure to do so may cause serious personal injury and/or equipment damage.

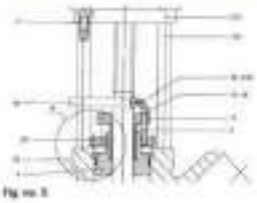

Fig. no. 5

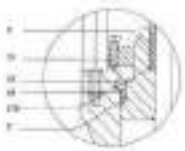

Detail A

Please refer to Figure no. 5.

1. Remove any operator.
2. Unscrew the screw (pos. 7) and remove operator flange (pos. 20).
3. Unscrew and remove coupling (pos. 18).
4. Unscrew and remove gland bolts (pos. 16-18) and gland flange (pos. 14).
   Remove the screw (pos. 7) and remove bonnet retaining flange (pos. 5).
5. Push the bonnet down inside the body and the segment rings (pos. 4) as free.
6. Remove the segment rings, push them out from the body groove by using the body holes (placed laterally at the top of the body).
7. Lift up the bonnet with its and pressure seal body gasket (pos. 3). Make sure not to damage the packing. We suggest of replacing the packing when removing the body gasket.
8. Contact Seal at the gland housing and lubricate with suitable grease.
9. Replace the body gasket.
10. Reassemble all parts following backwards the above mentioned steps.

Caution

The nut (pos. 7) need to be tightened after valve first pressurization, as indicated in Table 2.

Section 3 - Maintenance Instructions

If the valve needs to be removed from the line for some extraordinary reason, the user should ensure the following:

1. The valve is depressurized, cleaned and cool.
2. The pipe shall be cut as far away from the valve as possible.

Section 4 - Maintenance Instructions

3.1 Grease

To lubricate the bearings on manual and gearbox operated valves, we suggest to use the grease AGIP GREASE EP2 or an equivalent product, as shown in the following table.

Table 3 - Grease Recommendations

Manufacture	Grease
AGIP	GREASE EP2
API	NLGI
BP	GREASE LTX2
ESSO	MEGGON 2
FINA	GREASE AP FINAGREASE CX 2
MOBIL	MOBILUX EP2
SKF	LGMT 2
SHELL	ALVANIA R2 SUPERGREASE A
STARLUBE	VALVOLINE SYG GREASE L2
TOTAL	MULTIS EP2 WH 2
VISCOL	SIGNAL ROLLER 2

For the lubrication of the valve stems, use the grease SIGNAL ROLLER 2 (Available in Italy). As an alternative you can utilize:
- CERA FITH 300 produced by REINER FUCHS
- SINAFLOSCON produced by KLÜBER

You can also use a special having more than 70% pure graphite content (within 98%) guaranteeing life without any abrasion agent.
For the lubrication of the actuator, refer to the relevant manual.

4.2 Special Tools

No special tool required for the Maintenance Operation described in this Manual.

PENTAIR

Global Projects

Document Summary

11-Nov-2016

Customer / End-User	VOGT Power International
Project Name:	V17491 - Amula AB/PIS
Customer Purchase Order:	V0010162
Pentair Sales Order:	7367210
Pentair Document Number:	7367210-G08-001
Vogt Document Number:	-
Document Description:	Cleaning, Packing, Pressurisation and Shipping Procedure
Drawing Number:	-
Revision:	0
Item No.:	23
Tag Number(s):	51HAH10AA002 52HAH10AA002 51HAH10AA001 52HAH10AA001 51HAH10AA101 52HAH10AA101 51LA815AA102 52LA815AA102 52LA815AA005 52LA815AA003 05LA815AA007 05LA820AA007 51LA805AA101 52LA805AA101 51LA805AA001 52LA805AA001 51HAH50AA002 52HAH50AA002 51HAH50AA001 52HAH50AA001 05LA820AA006 51HAH50AA123 52HAH50AA123 51HAC50AA001 52HAC50AA001 51LAA10AA004 52LAA10AA004 51LAA10AA002 52LAA10AA002 05LAA10AA102

Notes:

VOGT POWER INTERNATIONAL
V17491-PVXE-512-00
28-Nov-2016

INDEX

1.0 PURPOSE

2.0 PROTECTION AND PRESERVATION

3.0 CASES

4.0 MARKING

5.0 CHECKING BEFORE SHIPPING

6.0 LOADING

7.0 STORAGE AT JOB SITE

8.0 ATTACHMENTS

0	[illegible]	First Issuance	[illegible]	[illegible]	[illegible]
Rev. No.	DATE Date	DESCRIZIONE MODIFICHE Revision description	PREPARED BY Prepared	CONTROL Verified	APPROV. Approved

1.0 PURPOSE

The purpose of this specification is to ensure that every valve leaves the Company - perfect condition - and adequately protected in order to avoid damage during transport.

2.0 PROTECTION AND PRESERVATION

2.1 Valves shall be cleaned of all foreign material and thoroughly dried after completion of all tests and inspections.
Gate, Globe & Check must be sent to the shipping department in a closed position, ball valves in the open position.
Unprotected carbon steel internal surfaces shall be sprayed, brushed or flushed with a suitable soluble corrosion inhibitor.
The body cavity and the area behind the seat rings shall be preserved / dewatered through filling with a water-repellent/water-absorbing oil or preservation fluid.
Anti-rust type: **EMUS DW 3262** (see attached technical data sheet).

2.2 BW-Ends, RF and RTJ shall be protected with plywood / plastic protective disc / EL-STRIPS (black type) or in accordance to customer required.
All BW-Ends shall be protected with: **DEOXALUMINITE** (see attached technical data sheet).
RF and RTJ flange shall be protected with: **NITRO ROSSO FLANGE AF** (see attached technical data sheet).
These must be securely fastened and sealed around the edges to avoid displacement and thus allow foreign matter to enter the valve bore.

2.3 Valve stem shall be greased and protected with:
MOLYCOTE P-74 Paste (see attached technical data sheet).

2.4 Grease nipples shall be coated with heavy grease to avoid painting adhesion.

3.0 CASES

3.1 Cases shall be close boarded boxes dependent upon valve size, method of shipment, clients order requirements.

3.2 The cases must be of adequate dimensions to the valve sizes.
No part of the valve or its plastic covers or handling appurtenance shall protrude beyond the edge of the crate. The connected valves must be sufficiently supported and separated within the case in order to minimize damage in the event of handling during shipment.

3.3 Detailed instructions shall be issued by Quality Dept. included in the Job Quality Plan. Cases shall be purchased, inspected and identified accordingly.

3.4 The wood used for the cases will be firm and must be sufficiently thick to support the weight of the valves and within best commercial quality.
All wood except the plywood must be fumigated in accordance with ICPP-hpm 15.

3.4.1 Recommended wood thick are the following:

- **Cases for net weight up to 250 Kg.**
  - All board : Min. 25 mm
  - Rubbing strip/skids : Min. 50mm
- **Cases for net weight from 250 to 500 Kg.**
  - All boards : Min. 25 mm
  - Rubbing strip/skids : Min. 70mm
- **Cases for net weight from 500 to 4000 Kg.**
  - Boards : Min. 25 mm
  - Bottom boards : Min. 30 ÷ 40 mm
  - Skids : Min. 60 mm
  - Rubbing strip : Min. 100 mm

Note: For net weight above 4000 kg technical office will issue specific instructions.

3.5 The inside of the close boarded boxes must be lined with moisture barrier.

3.6 All close boarded boxes containing valves of corrodible materials shall contain suitable bags of "silicon gel" or "VCI Foil".

4.0 MARKING

4.1 All cases must report marked the international signs with water resistant ink.

4.2 Marking shall be done giving the following instructions :

- Contract no'
- Port of destination
- Description of the goods
- Case no'
- Gross weight: (in Kgs)
- Net weight: (in Kgs)
- Dimension: (Length x Breadth x Height): in Cm
- Customer name
- Project name or number
- Any other requirement as per Purchase Order

5.0 CHECKING BEFORE SHIPPING

5.1 The packing and shipping marking must be checked by shipping supervisor and Q.C. for conformity before shipping.

5.2 In addition the contents must be checked with the packing list a copy of which must be secured to the outside.

5.3 Valves shall be shipped in the fully open position.
All internal gaps in the bore of the valves and external apertures shall be marked with adhesive (solvent removable) plastic tape to prevent contamination.
Valve and actuates shall be supported adequately. Additional documents shall accompany the goods fully in accordance with P.O. requirements.
i.e.: Handling and installation procedures, material and test certificates, Q.A./Q.C. documents and inspector's release.

6.0 LOADING

It is responsibility of PENTAIR "Rescaldina Plant" shipping supervisor and Q.C. personnel, to verify that activities are carried-out in a suitable way, in order that cases will be correctly placed and strongly and safely fixed in the lorry.

PENTAIR tassani nelmond	CLEANING, PACKING, PRESERVATION AND SHIPPING	Doc. N° Q.C.L. 118-CPP Rev. 0	Page 8 of 8

7.0 STORAGE AT JOBSITE

7.1 In order to assure the good preservation of the valves at the jobsite, for a period of over two years, we recommend storing the cases in closed, well dry and airy places.

7.2 The wooden boxes should be periodically checked (every 3 months).
If internal damages appear the cases shall be opened in order to verify the preservation conditions of the valves.

7.3 It is recommended to replace every 3 months the Silica-Gel bags.

8.0 ATTACHMENTS

- Technical data sheet ENSIS DW 1262
- Technical data sheet DEOXALUMINITE
- Technical data sheet NITRO ROSSO FLANGE AP
- Technical data sheet MOLYCOTE P-74 Paste

Technical Data Sheet

Shell Ensis DW 1262

Medium term rust preventive with dewatering properties

Shell Ensis DW 1262 is medium-term rust preventive oil, which leaves a waxy film with dewatering properties.

Applications

Shell Ensis DW 1262 is **medium term rust protection** suitable for metal surfaces likely to corrode in storage or use.
Shell Ensis DW 1262 is a **water displacing solvent based** rust inhibitor that leaves temporary **waxy protective film** on metal surfaces. The product protects metal parts from the damaging effects of moisture, air, detergents & other contaminants.

Shell Ensis DW 1262 can be applied by dipping or spraying.

Characteristics

After the evaporation of the solvent Shell Ensis DW 1262 leaves a waxy film on surfaces. Shell Ensis DW 1262 is easily removed with aqueous alkaline cleaner or solvents.
It is premium quality dewatering type rust preventive with good coverage. Effective in neutralizing finger print, Resin cracking & peeling.
Use Shell Ensis DW 1262 where you require excellent covering capacity and excellent medium-term protection.

Duration of Protection

Indoors	12 months
Covered Outdoors	3 months
Outdoors	Not recommended

Storage

The product should be stored inside (5 – 40 °C) for no more than 2 years and be protected from freezing.

Health & Safety

Shell Ensis DW 1262 is unlikely to present any significant health or safety hazard when properly used in recommended applications and good standards of industrial and personal hygiene are maintained.

Typical Physical Characteristics

	Shell Ensis DW 1262
Classification ISO 6743/9	ISO-L-RP
Appearance	Clear yellow
Density at 15 °C (kg/m³) (DIN EN ISO 12185)	814
Kinematic Viscosity at 20 °C (mm²/s) (ASTM D 445)	1,9
Flash point (°C) (ASTM D 93)	40
Film thickness (µm)	1,8

Note: These values are typical of current production. While future production will conform to Shell specification, variations in these characteristics may occur.

Shell Lubricants

Data Sheet Control Sheet G.A. REVIEW

Prod Data

PRODUCT DATA SHEET

O-C Sales & Engineering, Inc.
5024 N. 105th St., Butler, IN 46721 USA
Chemical emergency: 800-255-3924
Chemical emergency: 347-413-0898

PHONE: 260-925-1960
FAX: 260-925-0028

PREPARED: 1/5/08
PRODUCT NAME: DEOXALUMINITE

PHYSICAL DATA

DESCRIPTION: Aluminum based organic welding paint primer suitable for use in painting restoration to welding, and providing the metal of the weld area from corrosion failure and after welding without affecting the welding procedure.
COVERAGE: 400 - 600 sq. ft. per gallon. Allow for overspray and surface irregularities when calculating requirements.
APPEARANCE/ODOR: Aluminum (opaque) liquid, pungent odor
FLASH POINT: 80oF, open cup VISCOSITY: 10 - 15 seconds @ 80oF (Ford #4 cup)
VOC RATING: 5.91 % SOLIDS BY VOLUME: 34% (approx)

APPLICATION INSTRUCTIONS

SURFACE PREPARATION: Must be clean, dry and free of flaks, scales or oil. Wheelabrator shot blasted surfaces provides an ideal profile for maximum coverability of film. Aluminum oxide applied through a pressure blast system is also adequate although the surface profile is spotted. An oiled or vaseline surface is remove residual silicone contam.
APPLICATION: Thinning is not recommended. If necessary, use xylene, which raises the VOC. Do not not apply coatings to a temperature below 60°F or at 70 to 3 mil thickness on. Stress and film thickness (MF 1) of 1 to 2 d. Apply between minimum ambient and surface temperatures of 60oF to 100oF. Do not apply if relative humidity is more than 90% or if part surface temperature is within 5oF of the dew point.
EQUIPMENT: Experience testing has shown that the most consistent and economical method of application is with a HVLP (high volume, low pressure) spray system. However, successful application can be made by brushing, dipping or using standard spray equipment such as Delta 18 or equivalent, with Nozzle #8 and air nozzle #802 or Binks 36 or equivalent with fluid tip 15 and air nozzle 195.
DRYING TIME: At 70oF: To touch - 15 to 30 minutes. Recoat by spray or brush - 30 minutes. Hard cured - 24 hours.
CLEANUP: With xylene

SAFETY INSTRUCTIONS

FIRE EXTINGUISHING: Foam, dry chemical or any Class B fire
FIRST AID: Flush eyes and skin with large quantities of water. Remove victim to fresh air if inhaled and give artificial respiration if necessary. Do not induce vomiting if ingested. See MSDS for further information.
STORAGE: Extremely flammable. Store away from sources of heat and ignition. Maximum recommended shelf life is 6 - 12 months from manufacture.

Data Sheet Control Sheet G.A. REVIEW

http://www.occsales.com/DC/Prod_Data.html

Co.Fil

TECHNICAL DATA SHEET - NITRO ROSSO FLANGE AP

GENERAL CHARACTERISTICS: Product formulated with nitrocellulose and acrylic resins, modified with plasticizers and tinted with transparent red pigment. The product provides good filling power, glossy look, very fast drying and good mechanical properties.

END OF USE: transparent paint suitable for the provisional protection of pickled or turned metal surfaces. The product can be removed by simple wash using nitro thinner.

Painting and protection down medium term – ISO 12944 C3 max 1 year

CHEMICAL-PHYSICAL CHARACTERISTICS
(Average values)

COLOR		TRANSPARENT RED
GLOSS (60°)	MA - 02	80
Viscosity, Ford cup 4 (20°C)	MA 01	90-80"
Specific gravity (g/l (20°C)	MA - 02	910 ± 50
Solid content (in weight) %	MA - 04	38 ± 3

Method of analysis – road section MA

METHOD OF USE: Recommended dilution: 15-20% with thinner
Viscosity of application: 16-20" Ford 4 (spray)

DRYING: Air, 20°C and 50% relative humidity
Dust free: 5-10'
Handle: 15-20'
Hard in depth: 40-90'

Recommendations for use: It is recommended to use nitro thinners with good anti fog characteristics, as products of this kind of chemical nature could stretch to the whitening if applied in conditions of high environmental humidity.

For this reason, in order to don't compromise the final result, we recommend to apply the product in suitable environmental conditions. Do not apply the product with temperature below 10°C and relative humidity over than 80%.

All information, data and suggestions about maintenance that been contained in this sheet of our technical knowledge and experience. Do not contain a guarantee of the correspondence of the product to characteristics mentioned in technical data sheet, but cannot be responsible of the results obtained by an incorrect use of the product.

Data Sheet Control Sheet G.A. REVIEW

Product Information

Specialty Lubricants

MOLYKOTE® P74
Super Anti-Seize

Solid lubricant paste used in the assembly and fitting of a wide range of components such as metal threaded connections

FEATURES

- Metal-free
- Good corrosion protection
- High load-carrying capacity
- Coefficient of friction is of the same order as for solid bolts
- Low scattering of pre-tensioning force
- Prevention of stress cracking and brittleness
- Wide service temperature range
- Wear reduction

COMPOSITION

- Solid lubricants
- Synthetic oil
- Thickener
- Adhesion promoter

APPLICATIONS

- Suitable for a wide range of applications in the chemical, petrochemical, paper and automotive industry, and in engineering, wood and plastic processing.
- Used on bolted connections, sliding contact bearings, linear sliding guides, splined shafts, press fit joints, exhaust bolts, spark plug threads, flanges and flange nuts, door hinges, brake mechanisms and plate springs.

TYPICAL PROPERTIES

Specification notices: These values are not intended for use in preparing specifications. Please contact your local Dow Corning sales representative prior to writing specifications on this product.

Standard*	Test	Unit	Result
	Physical properties		
	Color		Graphite black
ISO 2137	Unworked penetration	mm/10	330-350
DIN 3811	Density at 20°C	g/cm³	1.11
	Base oil viscosity at 40°C	mm²/s	65
	Service temperature range	°C	-40 to +200 as a paste; to +1500 dry lubrication
DIN 3170	Drop point	°C	None
	Four pressure at -40°C	mbar	approx. 400
DIN 51 817	Oil separation, 7 days, 40°C	%	2.5
	Corrosion protection		
DIN EN 3456	Salt spray test at 50µm thickness	h	120
	Load-carrying capacity, wear protection, service life		
DIN 51 350 pt.4	Four-ball tester		
	Weld load	N	4000
DIN 51 350 pt.5	Four-ball tester		
	Wear scar at 1000 load	mm	1.1
	SRV test (type Optimol ball/plate, load 1000 reciprocal test, friction coefficient)		0.10
	Step load test, max. load	N	1300
	Wear test	mm	0.74
	Coefficient of friction		
	Pastelik	µ	0.14
	Screw test fasteners		
	Friction coefficient in bolt connection M-12 alloy 1.7709	µ thread	0.117
		µ head	0.078
	Alloy Aqual P-40 aluminium	µ thread	0.13
		µ head	0.094

TYPICAL PROPERTIES (continued)

Standard*	Test	Unit	Result
	Hot wear test		
	Alloy 1.7709, M-12 after 4 weeks at 540°C		
	Initial break-away torque at starting torque at 400Hz	Nm	13.5
	Repeat 40 elements M-12, break-away torque Nm after 24 h at 540°C		13.5
	Resistance against water		
DIN 51807	Water resistance		
Type 1	at 40°C		0
	at 90°C		0/1

* DIN: International Standardisation Organisation.
DIN: German Industrial Norm.

SPECIFICATIONS

General Motors (Opel)
B040104
Volkswagen
TL 52112
Ha. 021/1
Complies with General Electric
SL 1117-001
Complies with EDF-PA12C (with Pratt & Whitney
PRA-81246

HOW TO USE

How to apply

If possible, clean the thread and seal faces with a wire brush. Spread an adequate amount of the paste on the contact areas in order to obtain a good seal. As excess is not harmful, in order not to alter the properties, the paste must not be mixed with greases or oils. Use spray can in order to apply the product more quickly and closely to larger areas or poorly accessible places. Can be applied via centralized lubrication systems.

HANDLING PRECAUTIONS

Product safety information required for safe use is not included. Before handling, read product and safety data sheets and container labels for safe use, physical and health hazard information. The material safety data sheet is available on the Dow Corning website at www.dowcorning.com. You can also obtain a copy from your local Dow Corning sales representative or Distributor or by calling your local Dow Corning Global Connection.

USABLE LIFE AND STORAGE

When stored at or below 20°C in the original unopened containers, this product has a usable life of 60 months from the date of production.

PACKAGING

This product is available in different standard container sizes. Detailed container size information should be obtained from your nearest Dow Corning sales office or Dow Corning distributor.

LIMITATIONS

This product is neither tested nor represented as suitable for medical or pharmaceutical uses.

HEALTH AND ENVIRONMENTAL INFORMATION

To support Customers in their product safety needs, Dow Corning has an extensive Product Stewardship organization and a team of Product Safety and Regulatory Compliance (PS&RC) specialists available in each area.

For further information, please see our website, www.dowcorning.com or consult your local Dow Corning representative.

LIMITED WARRANTY INFORMATION - PLEASE READ CAREFULLY

The information contained herein is offered in good faith and is believed to be accurate. However, because conditions and methods of use of our products are beyond our control, this information should not be used to substitute for customer's tests to ensure that Dow Corning's products are safe, effective, and fully satisfactory for the intended end use. Suggestions of use shall not be taken as inducements to infringe any patent.

Dow Corning's sole warranty is that the product will meet the Dow Corning sales specifications in effect at the time of shipment.

Your exclusive remedy for breach of such warranty is limited to refund of purchase price or replacement of any product shown to be other than as warranted.

DOW CORNING SPECIFICALLY DISCLAIMS ANY OTHER EXPRESS OR IMPLIED WARRANTY OF FITNESS FOR A PARTICULAR PURPOSE OR MERCHANTABILITY.

PENTAIR

Global Projects

Document Summary

11-Nov-2016

Page 1 of 37

Customer / End-User	VOGT Power International
Project Name:	V17491 - Anuta ABPR5
Customer Purchase Order:	V00U0863
Pentair Sales Order:	T367210

Pentair Document Number:	T367210-J01-002
Vogt Document Number:	-
Document Description:	Operation and Maintenance Manuals - Rotork
Drawing Number:	-
Revision:	0
Item No.:	20 - Erection/Installation drawings and/or manuals 21 - Operation and Maintenance Manuals, incl. Sub-Vendor Literature
Tag Number(s):	51HAH03AA103 52HAH03AA103 51LAB10AA003 52LAB10AA003 51LAB50AA001 52LAB50AA001 51HAH60AA103 52HAH60AA103 05LAA50AA002

Notes:

VOGT POWER INTERNATIONAL
Released: Not Any Proceed
Hannover, Pennsylvania | Nov 09 2016

VOGT POWER INTERNATIONAL
V17491-PVXE-538-00
11-Nov-2016

rotork
Controls

IQ Range

Instructions for Safe Use, Installation, Basic Setup and Maintenance

⚠ This manual contains important safety information. Please ensure it is thoroughly read and understood before installing, operating or maintaining the equipment.

CE

Table of Contents

1. Introduction 3
1.1 Identifying Actuator Parts 3
1.2 Model Identifying Tag 4
1.3 Introduction to this manual 4
2. Health and Safety 5
2.1 Intended Use (Actuator Accessories) 7
3. Storage 7
4. Operating your IQ Actuator 8
4.1 Operating Modes 8
4.2 Operating Use Levels 8
4.3 Display – Local Indication 9
4.4 Display – Home screen selection 10
4.5 Display Status Indication – Tower 11
4.6 Display Status Indication – Control 11
4.7 Visible Alarm Indication 11
4.8 Audible Alarm 11
5. Preparing the Drive Bush 12
5.1 IQ Gear of sizes Cam B and C1 12
5.2 Non-Thrust Base Type B 12
6. Mounting the Actuator 14
6.1 Mounting Valve Using The Mounting 14
6.2 Valve with Gearbox – Side Mounting 15
6.3 Non-Rising Stem Valves – Top Mounting 15
6.4 Handwheel Fitting 16
6.5 ISO8 Manufacturing Accessory 16
6.6 IQ, IQ, IQM, Linear Drive Unit 16
6.7 IQ, IQ, IQM, Adjusting Linear Valve 17
7. Cable Connections 22
7.1 Terminal Block Cables 22
7.2 Switchboard Connections 18
7.3 Replacing Terminal Cover 18
7.4 Cable Entry 19
7.5 Connecting to Terminals 20
7.6 Replacing Terminal Cover 21
8. Commissioning – Basic Settings 23
8.1 Commissioning the Actuator 23
8.2 Security – Password 23
8.3 Basic Settings Menu 24
8.4 Basic Settings – Units 25
8.5 Close Settings 26
8.6 Open Settings 28
8.7 Torque Switch Bypass 29
9. Maintenance, Monitoring and Troubleshooting 30
10. Environmental 32
11. Weights and Measures 31
12. EQ Applicable 30
13. Approved Fuses 34
14. Vibration, Shock and Noise 39
15. Conditions of Safe Use 39
15.1 Product Guide for AFB2 and AFB3 Approved Actuator 39
15.2 Product Guide for Non-Approved Gear Box AFB2 and AFB3 Approved Actuator 39

1. Introduction

1.1 Identifying Actuator Parts

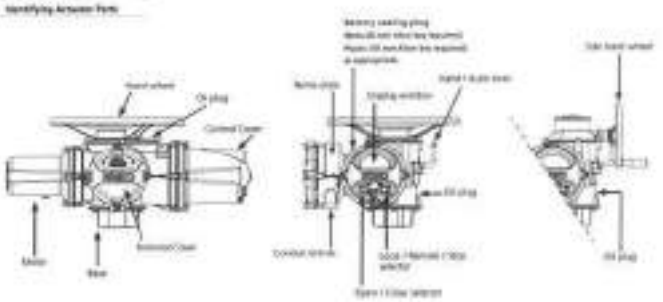

1.2 Rotork Setting Tool

The Rotork Bluetooth® setting tool (by IQ) is intended for regular & occasional commissioning operations when using Bluetooth® Technology. Self-Setup, IQ range support for older Rotork products is not currently available in Rotork's mobile app, please refer to publications PUB002-002 and PUB002-006.

Use your Rotork Cable to connect to Rotork Bluetooth® wireless enabled products and access advanced setup and available diagnostic features. Wireless configuration programs or instructions are not to be performed by the BTU or an unskilled user. Incorrect use can result in damaging valve/actuator assemblies or causing injury. Wireless configurations to the actuator, if there's reasons can be programmed into the BTU via Cable.

Rotork Bluetooth® Setting Tool IQ

Specification

Enclosure

Construction in accordance with IEC 60529 IP 66.

The BTU has been built in accordance with the following standards:

BS EN 61 010-1:2010 IEC 61 010

BS EN 61 326-1:2013 IEC 61 326

USA – Electrical Safety Code 1, Div 1, Groups A, B, C, D, E

Canada – Civil Area for Safety Code 1, Div 1, Groups A, B, C, D, E, F, G

Ambient Temperature Range

Same as Unit (-20 to +70 °C)

Operating Range

Inner Side of Box

Bluetooth® Use

Enclosure Materials

Polycarbonate ABS blend. Polycarbonate and Control Rubber.

Instructions for Safe Selection, Installation, Use, Maintenance & Repair

1. The BTU must be used in accordance with the current IQ range operating instructions, the equipment operating instructions, the equipment operating temperature range and ambient temperature range stated above. Do not use the BTU outside of its specification.

2. The BTU must be used only with the Rotork Cable provided.

3. The BTU must be used in accordance with the Rotork Cable provided. Do not use the Cable for other uses or use the BTU in an unsafe manner. If an IQ does not function, there is a potential functional problem with the BTU and the inspection or repair requirements stated below in paragraph 6 must be performed.

4. If the BTU is used in conjunction with approved equipment (e.g. remote mounting enclosures), then it is the responsibility of the user to take suitable precautions (e.g. regular visual inspection of the mounting arrangements or referring back to the enclosure manual), ensuring that the specific conditions for safe use of the BTU (mounting arrangements, IP rating, ambient temperature) are met. Failure to do so may result in damage to the equipment and/or injury.

5. It is essential that the user takes appropriate precautions to ensure that the equipment operating conditions are within the specified limits.

6. The user, operator of the BTU is responsible for:

a. The BTU must be inspected every three months. If a cable non-functional, discard the cable, remove and return to a Rotork Service Centre for repair. The BTU must be kept in a serviceable condition and the operating time of exposure.

b. The BTU must be kept in a good condition, ensuring that the Rotork Cable, Cable Glands, the Cable sections outside the Drive Box of the BTU, connection and connectors are sealed. If an IQ does not function, there is a potential functional problem with the BTU and the inspection or repair requirements stated below in paragraph 6 must be performed.

c. If the BTU is used in conjunction with approved equipment (e.g. remote mounting enclosures), then it is the responsibility of the user to take suitable precautions (e.g. regular visual inspection of the mounting arrangements or referring back to the enclosure manual), ensuring that the specific conditions for safe use of the BTU (mounting arrangements, IP rating, ambient temperature) are met. Failure to do so may result in damage to the equipment and/or injury.

d. The battery compartment of the BTU must be inspected every 3 months for any battery leakage. If any battery leakage has occurred then the BTU must not be used.

e. Only the manufacturer approved alkaline batteries (or Rotork Engineering type MAX cell batteries) must be fitted to the BTU:

- Duracell Procell (alkaline)
- Energizer FR

f. Always replace all five batteries at the same time. Always use five unused batteries of the same approved manufacturer, type and same date code.

g. Ensure the batteries are fitted with the correct polarity. The battery casing has a indication for the orientation of the battery compartment of the BTU.

h. The BTU contains no other user serviceable parts and if cannot be recovered by the user. If the BTU is faulty or needs repairing, it must not be used.

i. Only the manufacturer approved alkaline batteries (or Rotork Engineering type MAX cell batteries) must be fitted to the BTU:

- Duracell Procell (alkaline)
- Energizer FR

j. Always replace all five batteries at the same time. Always use five unused batteries of the same approved manufacturer, type and same date code.

k. Ensure the batteries are fitted with the correct polarity. The battery casing has a indication for the orientation of the battery compartment of the BTU.

l. The BTU contains no other user serviceable parts and if cannot be recovered by the user. If the BTU is faulty or needs repairing, it must not be used.

1.3 Introduction to this manual

This manual provides instructions on:

- Manual and electrical hand and remote operation.
- Programmed and manipulation of the actuator over the valve
- Basic Commissioning.
- Maintenance.

Refer to Publication PUB002-005 for repair, overhaul and spare part instructions.

Refer to Publication PUB002-002 for secondary function configuration instructions.

Using the supplied Rotork Bluetooth® Setting Tool Pro to access the actuator set up (operation, torque/thrust setting or torque trips, position limits and all other control and indication functions can be made safely, quickly and conveniently, even in hazardous locations. The IQ allows commissioning and adjustments to be carried out with the main power supply to the actuator switched on or off.

The setting tool is packed in the shipping box identified with a yellow label.

Visit our web site at www.rotork.com for more information on the IQ, Knight and other Rotork actuator ranges.

2. Health and Safety

This manual is produced to enable a competent user to install, operate, adjust and inspect Rotork IQ range valve actuators. Only persons competent by virtue of their training or experience should install, maintain and repair Rotork actuators.

Under no circumstances should replacement parts be used in Rotork actuators, other than those supplied as specified by Rotork.

Work undertaken must be carried out in accordance with the instructions in this and any other relevant manuals.

If the actuator is used in a manner not specified in this manual and any other relevant manual, the protection provided by the actuator may be impaired.

The use and these persons working on the equipment should be familiar with their responsibilities under any statutory provisions relating to the Health and Safety of their workplace. Due consideration of additional hazards should be taken when using the IQ range of actuators with other equipment. Should further information and guidance relating to the safe use of the Rotork IQ range of actuators be required, it will be provided on request. The electrical installation, maintenance and use of these actuators should be carried out in accordance with the General Legislation and Statutory Provisions relating to the safe use of the equipment, applicable to the site of installation.

In the UK, Electricity at Work Regulations 1989 and the guidance given in the applicable edition of the "IEE Wiring Regulations" should be applied. Also the user should be fully aware of its responsibilities under the Health and Safety Act 1974. For the USA, NFPA 70, National Electrical Code® is applicable.

The methods of installation should be carried out as outlined in this manual and also in accordance with relevant standards such as British Standard Code of Practice 1. If the actuator has conditions indicating that it is suitable for installation in hazardous areas then the actuators may be installed in Zone 1, Zone 2, Zone 3 and Zone 22 by Use 1 or Zone 2, Zone 21 Class II (Gas/Vapour) and Class III (Dust) hazardous area locations only. It should not be installed in hazardous area locations with an ignition temperature less than T4 "T" rating suitability by Rotork operation temperature has been included in the actuator calculation.

It should not be installed in hazardous area locations corrosive with the gas and dust groups stated on the nameplate.

The electrical installation, maintenance and the use of the actuator should be carried out in accordance with the code of practice relevant for the particular Hazardous Area Certification.

No repairs or repairs should be undertaken unless it conforms to the specific hazardous area certification requirements. Under no circumstances should any modification or alteration be carried out on the actuator as this could invalidate the actuator Hazardous area approval certification. Access to the electrical compartment is limited to the hazardous area while this is done under a valid permit to work, otherwise all power should be isolated and the actuator stored in a non-hazardous area for repair or inspection.

⚠ WARNING: Service Altitude

The actuator installation altitude must be restricted to less than 2000 m as defined by IEC61010-1 Safety requirements for electrical equipment for measurement, control and laboratory use.

⚠ WARNING: Motor Temperature

Under normal operation the temperature of actuator (motor over surface) can exceed 60 °C above ambient.

⚠ WARNING: Surface Temperature

The installation must ensure thermal process surface temperature rating is not influenced by external heating/cooling effect (e.g. solar/radiative process temperature).

⚠ WARNING: Thermostat Bypass

If the actuator is configured to bypass the motor thermostat then the hazardous area certification will be invalidated. Additional electrical hazards may occur when using this configuration. The user should ensure that any necessary additional safety measures are considered.

⚠ WARNING: Enclosure Materials

All Range of actuators are manufactured from aluminium alloy with chemical nickel finishes and the wheel bases are manufactured in cast iron.

The cover window is toughened glass which is retained with a 2 part silicone cement and the battery plug will be either nylon, steel or PPS (Polyphenylene Sulfide).

The user must ensure that the operating environment and any materials surrounding the actuator cannot lead to a reduction in the safe use of the enclosure provided for the actuator. Where appropriate the user must ensure the actuator is suitably protected against its operating environment.

⚠ WARNING: Operating by hand

When engaging handwheel operation on Rotork electric actuators, refer to section 4.1.

⚠ WARNING: Actuator may start and operate when remote is selected. This will be dependent on remote control signal status and actuator configuration.

2.1 ATEX/IECEx Certified Actuator

Special Conditions:

This actuator must only be installed in areas where the risk of impact to the viewing window is low.

This equipment includes some external non-metallic parts including the protective coating. To avoid the possibility of static build up, cleaning must only be carried out with a damp cloth.

⚠ WARNING: External Resistance Hazards:

Enclosure fasteners are stainless steel grade A4 (316) except for line following (cam) and return marked on the nameplate as brass. In these units the brass cam fasteners are carbon steel grade 12.9. If in doubt check the grade marked on the relevant fasteners or contact Rotork.

Actuator Size: IQ10QM/IQ2A 20 & 25 or IQ10QM 25

Ex II 2 GD T4 Gb (-20°C to +70°C)
Ex II 2 GD T4 Gb (-40°C to +70°C)
Ex II 2 GD T3 Gb (-20°C to +40°C)
Ex II 2 GD T3 Gb (-40°C to +40°C)

Certificate No. Sira 12ATEX1175X or 12ATEX1176X

Actuator Size: IQ10QM 20 & 25 or IQ2A

Model: IQ(W)M - (Explosionproof, Class I, Div 1, Groups B, C, D)
FM Approved

3. Storage

If an actuator cannot be installed immediately, then it is a good idea until you are ready to connect incoming cables.

If the actuator has to be installed but cannot be cabled it is recommended that the glands fitted cable entry plugs are replaced with spare ones which are sealed with PTFE tape.

The Rotork double sealed compartment will assure internal electrical components protection if left unfinished.

It is not necessary to remove the electrical compartment covers in order to commission the IQ actuator.

Rotork cannot accept responsibility for deterioration caused on site once the covers are removed.

Every Rotork actuator has been fully tested before leaving the factory to give years of trouble free operation, providing it is correctly commissioned, installed and sealed.

4. Operating your IQ Actuator

4.1 Operating by Hand

⚠ WARNING

Work requiring handwheel operation of fail-safe electric actuators, under no circumstances should any additional/ancillary devices such as a wheel key or wrench be applied to the handwheel in order to develop more force when closing or opening the valve as this may cause damage to the valve and/or actuator or may cause the valve to become stuck in the closed/fail-safe position.

Keep clear of the handwheel when engaging hand operation. Actuator driving valve via extension shafts may be subject to rotation/shaft lash which can cause the handwheel to rotate when hand operation is engaged.

⚠ To engage hand operation the operator the handwheel lever into "Hand" position and turn the handwheel to engage the clutch. The lever can now be released and the shaft will return to its original position. The handwheel will remain engaged until the actuator is operated electrically when it will automatically disengage and return to motor drive.

If required for local devices/systems the manual/electric state can be locked in place position using a padlock with a 6.5 mm loop.

Locking the lever in the "Hand" position prevents electrical operation of the actuator moving the lever.

4.2 Operating Electrically

Check that power supply voltage agrees with that on the actuator nameplate. Rotork actuators require 5 to not necessary to check phase rotation.

⚠ Do not operate the actuator electrically without first checking, using the Infra-red Setting Tool, that at least the Basic Settings have been made (refer to section 6).

Selecting Local/Stop/Remote Operation

The rear selector enables either local or remote control, isolation (with padlock) using a pattern with a 6.5 mm hole.

When the selector is locked in the local or remote positions the stop facility is still available. The selector can also be locked in the Stop position to prevent electrical operation by local or remote control.

Fig. 4.2.1 - Rear Local/Remote

Local Control

With the rear selector operational at local (see instructions for selector lever locks on the actuator), local control can be initiated using Open or Close. For local, local control operation.

Remote Control

Remote control will only be in the Remote position (open/closed). The remote control signals to operate the actuator. Local field can not be used by turning the hand lever anti-clockwise.

4.4 Display - Local Indication

LED INDICATION: R = RED, G = GREEN, Y = YELLOW, B = BLUE

Fig. 4.4.1 - Rotork Display

1. Position display

This is the main segment display for position and remote position indication to 1 decimal point.

2. Analogue bar

Scale (0% to 100%) is used when Analogue Output (4-20 mA) is used for monitoring (%, position / demand). Remote units are selected, Refer to section 4.4.

3. Infra-red LEDs

Used for older models of setting tool and to indicate data connection using Bluetooth wireless technology.

4. Dual position LEDs

Consisting of 2 x Yellow for mid position and 2 x Amber (Red / Green) for end of travel indication.

5. Bluetooth indication LED

A dual colour LED for indicating an active connection using Bluetooth wireless technology.

6. Alarm icon

This icon will be displayed for valve, control and actuator alarms. Alarm indication is supported by fault indication on the face or the red/amber flash on the main display.

7. Battery alarm icon

This icon will be displayed when a battery is detected as low or discharged. "Battery low" or "Discharged" will also be displayed in the text display above.

8. Infra-Red icon

This icon flashes during setting and communication activity. LEDs will also flash when keys are pressed.

9. Percentage Open/Icon

This icon will be displayed when a valve open value is displayed (e.g. 50 %).

10. Dot Matrix Display

A non-volatile 160x32 dot display for displaying setup menus and datalogger graphs.

When a numeric display is active the status and active alarms will be displayed.

The LCD screen is made up of two parts, the main segment display and the dot matrix display. The display are least sensitive to short-term display up to be enabled to show different information. The dot allows a combination of non-display for select flexibility.

On power the LCD is backlit with a colour light to enable the best viewing contrast in all lighting conditions. For additional positional indication, the LEDs at either side of the LCD are used for C (red/green) and Open (red/ amber) and Open (red/ amber). These LEDs are fully configurable in the settings menu to be displayed at one or both.

4.4 Display – Home screen selection

The actuator display can be set to show one one of the following home screens:

- Position indication
- Position & Digital Torque indication
- Position & Analogue Torque indication
- Position & Limited Command indication

The default home screen is Position. Home screens indicate the live conditions measured by the actuator when mains power is switched off the actuator (battery powers the display) and it will show the position indication display only.

The required home screens can be set by the installer as a permanent display or as a temporary display for select or actuator operational events.

Temporary Home Screen Display

During the setting procedure (refer to 6.7) press keys, scroll through the available home screens until the required one is displayed. The selected screen will remain displayed for approximately 5 minutes after the last keypress command or until the actuator leaves a cycle.

Permanent Home Screen Display

Using the setting tool (refer to 6.7), connect to the actuator.

From the **Settings** menu, select **Indication Cont/Display**. From the available settings, select **Home Screen**. Enter the password sequence (refer to section 6.3), select Home screen and from the dropdown list select the required Home screen for permanent display.

Fig 4.4.1 - Home screen selection

Position - Default valve position display.

Torque (M) + Pos - Position with analogue torque indication

Torque (D) + Pos - Position with digital torque indication

Position+ - Position with digital and analogue position demand indication

Once selected the set display will be live active, pressing Home screen button to Fig 4.4.2 to 4.4.5.

Fig 4.4.2 - Position

Fig 4.4.3 - Torque (M) + Position

Fig 4.4.4 - Torque (D) + Position

Fig 4.4.5 - Position+

4.5 Display Status Indication – Travel

The IQ display provides real time status indication. The top line of the dot area is reserved for travel status indication.

Fig 4.5.1 shows the travel status indication in **CLOSED (MID)**

Fig. 4.5.1

4.6 Display Status Indication – Control

The bottom line of the dot area is reserved for control status indication and is displayed for approximately 2 minutes after the control mode or input is inactive.

Fig 4.6.1 shows the control status indication **Remote Control**

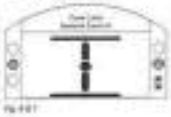

Fig 4.6.1

4.7 Display Alarm Indication

The IQ display provides alarm info over in the form of text and alarm icons.

There are 2 alarm icons:

General Alarm

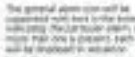

Battery Alarm

The general alarm icon will be supported with text in the bottom line info area. Per unit basis alarm, as of more than one is present, each alarm will be displayed in sequence.

Fig 4.7.1 shows the status example **TORQUE TRIP CLOSED**

Fig 4.7.1

4.8 Battery Alarm

Fig 4.8.1

The actuator shows the battery level in approximately 1 hour intervals. The battery alarm icon is displayed when the actuator source is battery or being fed and the display will indicate **BATTERY LOW**. If the battery is flat or exceeds the display will indicate **BATTERY DISCHARGED**.

When a flat or discharged battery alarm is displayed the battery should be replaced immediately. It is essential that the correct battery type is fitted to maintain actuator certification. Refer to section 9 for details.

After replacing a battery the alarm may not continue to be displayed until the next check and may take up to 1 hour. Cycling the power will force a battery check and clear the alarm.

5. Preparing the Drive Bush

5.1 IQ base of drive bushes A and Q

Each actuator prior to sale, remove the base flanged subunit holding retaining plate to access the drive bush and grease the drive sleeve (2) (available with or bearing assembly (3). Use EP2 or 3 type of grease. Use IQ 40 to 85 – 125 bushes have a retaining bearing and IQ10 to 16 actuators have a radial thrust bearing located on the drive bush and retained by the split circlip (8 and snap ring (9).

IQ10 to 16 have a thrust face bearing within a thrust bearing housing located on the drive bush and retained by the split circlip (8) and snap ring (9). This bearing is assembled in housing (4) and located on the drive bush and the bearing spacer ring (6).

⚠ WARNING: Failure to remove the bearing assembly and O-rings from the drive bush prior to machining may result in damage to the bearing.

Disassembly of bearing assembly (if fitted)

Locate and remove the snap ring (9) using a suitable tool. Remove the split circlip (8) (see fig. 5.1.1). Slide the bearing (3) off the drive bush (2).

Take the bearings and drive bush bearing assembly to a safe clean place. The split circlip (8) must be kept as a matched pair.

Inspect the bearing surface for any cuts the wear bush, allowing a generous clearance on the cones (inner) bearing cones (inner).

Fig 5.1.1

Fig. 5.1.1 - Bearing assembly

Fig. 5.1.2 - Bearing assembly

Fig. 5.1.3 - Bearing assembly

Reassembly

⚠ WARNING: Failure to fully clean and grease the drive bush and O-rings before reassembly could result in damage.

Remove all swarf from the drive bush (2) ensuring all O-rings are undamaged, clean and grease the right of grease, refer to Section 10, assembly and measures.

Slide the bearing assembly (3) onto the drive bush (2) and ensure it is fitted square to the drive bush. Use IQ 40 to 125 with bearing, spacer ring (6) into bearing assembly ensuring O-ring is fitted and lubricated. Locate and with maintenance split circlip (8) and snap ring (9).

Locate and refit the drive bush mounting assembly into the Front Base housing on the actuator, ensuring that the slot in the drive bush are located into the drive slots of the hollow output shaft.

Refit the bearing plate (1) and secure with the flanged screws. For IQ40 to IQ85 tighten base retaining screws to the following torque values:

IQ1 | IQ10 Nm — 8 (6 | IQ12 | IQ base screws, 20 Nm | IQ 10 N

IQ2 | IQ 20 Nm — 16 (12 | IQ16 | IQ base screws, 20 Nm | IQ 20 N

5.2 Non Thrust Bore Type F

All Sizes

Locate the keyed bore around the drive plate (1) the gaskets and fit over the face plate.

The drive bush and actuator can now be seen. The gaskets will only seal the rim of the actuator. See Fig. 5.2.1

Fig. 5.2.1

Fig. 5.2.2

Types B2 and A4 Balance

Locating pin(s) (only done, possible for Large valve fitting on the drive bush. The drive bush will always have the actuator locking coupling with the cylinder located in the drive. Refer to Fig. 5.2.3

Types B1 Balance

The procedure for removal and refitting of the B1 drive bush is the same as for the A4 B2, however the locking pin(s) are a custom spring clip. The same operation is the same. Refer to the IQ30 – IQ85 Fig. 5.2.3

Fig. 5.2.3

6. Mounting the Actuator

⚠ Refer to Section 11 Weights and Measures for actuator weight.

Ensure the valve is secure before fitting the actuator as the combination may be top heavy and therefore unstable.

It is a requisite to lift the actuator using mechanical lifting equipment certified rating should be at least as indicated in Fig. 6.2.1 for vertical shaft and Fig. 6.2.2 for horizontal shaft.

As all sizes vary and are supplied pre-assembled should ensure safe lifting particularly when mounting situation.

⚠ WARNING: The actuator should be fully supported until full valve shaft engagement is achieved and the actuator is secure onto the valve flange.

A suitable corresponding flange conforming to ISO 5210 or JDM 'Standard MSS SP102' must be fitted to the valve.

Actuator to valve flange nuts (bolts) to minimal specification R50 Class 8.8, yield strength 635 N/mm².

⚠ WARNING: Do not lift the actuator and the valve combination via the actuator. Always lift the valve/actuator assembly via the valve.

Lift assembly must be secured in an individual sling for lifting.

⚠ WARNING: If the actuator orientation when installed is inverted (gear box up), attention is to be paid to ensure adequate lubrication. The user should top up the oil by the quantity stated in the table under section 11 Weights and Measures. Failure to do will cause premature wear.

Fig. 6.2.1

Fig. 6.2.2

6.1 Bonny Bore Valves Not Mounted

Fitting the Actuator and Base as a combined unit: all sizes

Fit the machined drive bush into the flange bore as previously described. Lower the actuator (complete with the standard valve stem, engage **FIRMLY** spline and wind the hand wheel in the open direction to engage the drive bush into the stem. To ensure seating of the actuator is firmly down against the valve flange, wind hand wheel fully to the open position and tighten fully to the required torque indicated in Table 6.

Fitting Thrust Base to Valve Actuator

Fit the machined drive bush into the thrust base as previously described. Ensure that drive keys from the actuator, passed through the threaded valve stem, with the dished thrust washer and bush, engagement and turn it in the clockwise direction to engage the thrust. Continue turning until the base is seated on the valve flange. Fit the securing bolts but do not tighten at this stage. Lower the actuator onto the thrust base and rotate the complete actuator until the dowelings on the actuator output shaft engage into the drive bush. An Oldham flange should hole for thrust with the base.

Centralise known actuator with flange mount align, alternately applied to actuator to thrust base and tighten valve to required torque, see table 6.

Open valve by two turns and firmly tighten down valve stem nuts (bolts) to the required torque, see table 6.

Fig. 6.1.1

Valve	Torque (Lb/Ft)	
	Min	Max
M8	10.8	14
M10	21.5	27.5
M12	36.5	46.5

Fig. 6.1.2 – Table 6

Imperial Size	Torque	
	Min	Max
¼	12.1	9
⅜	24.5	17.9
½	31.2	27.1
¾	73	37.2
1	150.1	78.1
1¼	147.4	108.7
1½	221.3	151.6
2	302.6	208.7
2½	380	261.3
3	377.1	447.1

Metric Size	Torque	
	Min	Max
M8	5.4	4.4
M10	7.24	7.9
M12	25.1	19.1
M14	31.8	25
M16	40.1	31.5
M20	119.8	93.1
M24	143.3	177.1
M30	114.8	141.4

Fig. 6.1.3 – Table 6

6.2 Valve with Gearbox – Side Mounting

Check that the mounting flange is of right angle to the valve stem and that the drive bush has the shaft and key with adequate axial engagement. Engage **FIRMLY** spline – or alternative key stem bush and turn handwheel to open position and tighten to the required torque indicated in Table 6.

6.3 Non-Rising Stem Valves – Top Mounting

Treat as for side mounting except the valve stem is seen in the actuator, a visual eye must be fitted above the drive bush and securely tightened.

6.4 Horizontal Sealing

Ensure that the sealing cap and O-ring is fitted correctly to ensure that moisture does not ingress down the centre column of the actuator (for valves with rising spindles a spindle or cover tube may be fitted, this will also be sealed with an O-ring and secured with cap screw).

Fig. 6.4.1

Fig. 6.4.2

6.5 IQM Modulating Actuators

The IQM range of actuators are suitable for modulating control duty of up to 1,200 cycles per hour.

IQM have a dynamic modulating facility as standard. If mechanical stops on valve actuator and valve prove to be necessary for actuator control, the brake can be enabled. With dynamic brake engaged, motor heating effects increase and therefore the number of starts may require reducing to ensure motor overheat tripping.

Commissioning of the IQM range is identical to the standard IQ – refer to Section 8.

6.6 IQL & IQML Linear Drive Unit

Consist of a lead screw assembly arrangement, located on the base of the actuator in order to provide a linear output motion between 8 mm (To no minimum and 300 mm of. To no maximum.

The IQL/IQML actuator can be supplied with or without a yoke mounting adapter. The weather version of has pillars and a base flange to suit the valve.

Fig. 6.6.1 IQML with yoke

Fig. 6.6.2 IQML without yoke

6.7 IQL & IQML Adjusting Linear Stroke

With the actuator securely fixed to the valve, but with the lower drive disconnected and valve stem is at its fully closed (down) position.

Remove cover cap from actuator handwheel. Using the down stop adjustment on the linear drive unit and valve stem operator, loosen the lock nut on the lock nut and tubular down stop anti-clock wise to the end of the thread.

Fig. 6.7.1

Turn the actuator handwheel clockwise, the linear drive will move down towards the valve spindle and

Locate the linear drive to valve spindle. Turn the tubular down stop clockwise into the actuator until in contact to a mechanical stop. If the valve nose cone not in, use the TORQUE HOLDER tool, back off approximately the down stop by one third of one turn (equivalent to 1 mm). Run the lock nut down onto the tubular down stop and tighten with two spanners. There is no of 'STOP' based on the linear drive unit, the mechanical stop in the valve will give this position. With the valve open the handwheel ensuring the O-ring is fitted.

The linear drive unit is pre-packed with extreme pressure multi purpose grease MULTI-REC, use this or an equivalent high temperature grease.

A grease nipple is situated on the base of the actuator to enable lubrication of the lead screw.

Periodically, depending on usage and temperature, apply two pumps of the grease gun.

7. Cable Connections

7.1 Terminal Block Layout

Fig. 7.1.1 – Terminal numbering same as actuator wiring as shown on the actuator wiring diagram

⚠ WARNING: Ensure all power supplies are isolated before removing actuator covers.

Check that the supply voltage agrees with that stamped on the actuator nameplate.

A switch or circuit breaker must be included in the wiring installation of the actuator. The switch or circuit breaker must have the relevant requirements of IEC60947-1 and IEC60947-3 and be suitable for the application. The switch or circuit breaker must not disconnect the protective earth conductor. The switch or circuit breaker must be mounted as close to the actuator as possible and must be marked to indicate that it is the disconnect device for that particular actuator. The actuator must be protected with overcurrent protection devices rated in accordance with installations P38002-01 (3-phase actuators) or P38003-01 (single-phase actuators).

⚠ WARNING: Actuators fed on phase to phase voltages greater than 600 V must not be used on supply systems such as floating, or earth phase systems, where phase to earth voltages in excess of 600 VAC could exist.

Power supply cable must have sufficient mechanical protection properties, to meet installation requirements and be suitable to comply with IEC requirements of the installed actuator. Suitable methods include armoured sheet covered cables or cables contained within conduit.

1.2 Earth/Ground Connections

A lug with a 6 mm diameter hole is cast adjacent to the product entries for attachment of an external protective earthing strap by nut and bolt. An internal earth connection (protective bonding) through the case alone is the protective Earth Connection.

1.3 Removing Terminal Cover

Using a 6 mm Allen key loosen the four captive screws evenly. Do not attempt to lean off the cover with a screwdriver this will damage the O-ring seal and may damage the humidistat (in a certified unit).

Fig. 1.3.1

The Rotork Bluetooth setting cover, packed separately, with the actuator in the shipping box, electrical with a yellow seal.

The wiring code can't fit in the cover, a same size as each actuator, and must not be interchanged with any other actuator. If in doubt check the serial number on the code cover with that of the actuator.

Fig. 1.3.2 An open terminal compartment and bluetooth setting key in the factory delivery in shipping box

A plastic bag in the terminal compartment contains:

- Terminal screws and washers
- Spare seal, O-ring seal
- Wiring diagram
- Instruction book

1.4 Cable Entry

Only appropriate certified explosion proof cable glands or conduit may be used in hazardous locations. The cable entries in the actuator are tapped M20 x 1.5p or NMC x 1.5p.

In hazardous locations, only use appropriate certified flameproof/explosion proof adapters per entry, maintaining the original ingress protection rating of the actuator.

Remove plastic tamper plugs. Make cable entries appropriate to the cable type and size.

Ensure that the cable glands, cable glands or conduit are tight and fully watertight. Seal unused cable entries with stainless steel threaded plug, or equivalent, using an appropriate certified threaded thread plug. Hold or locktite of the cable entry surface in the case of an measuring mated adapter.

Fig. 1.4.1

Fig. 1.4.1

1.5 Connecting to Terminals

Field wiring connections are by screw terminals. Insulation displacement connectors may be used. Insulation displacement connectors. Separate the field wiring from hazardous, low circuit, conditioning, and in accordance with national regulations and statutory provisions.

Tags are secured with the supplied 4 mm stainless steel screws and 5 mm galvanic pad mount washers.

⚠ To ensure secure electrical connections, it is important that the required washers are used as shown in Figure 1.5.1. Failure to do so may result in connections working loose or screws not clamping down on wire termination tags. Spring washers must be compressed. Screw tightening torques must be observed (1.5 Nm (13 lb.in)).

Fig. 1.5.1

⚠ On Ex 'n' certified terminal enclosures, connections to the power and control terminals must be made using ANY type 1/8DTG ring tags, for power and earth terminals and AMP type 34848 ring tabs for control terminals.

Refer to the wiring diagram inside the terminal cover to identify functions of terminals. Check the supply voltage is the same as that marked on the actuator nameplate.

Remove power terminal guard.

Begin by connecting power cables and replace guard. When all connections are made ensure wiring diagram is replaced in the terminal compartment.

⚠ WARNING: Wiring can reach 85°C in a 70 °C ambient temperature. For safety ensure the same voltage level must be connected to all the actuator's indication terminals, remote input terminals and digital I/O terminals (if applicable).

Mechanical strain must be provided with condition suitable for the rated voltage without considering terminal requirements and statutory provisions.

1.6 Replacing Terminal Cover

Ensure cover O-ring seal and spigot are in a good condition and lightly greased before refitting cover.

2. Commissioning – Basic Settings

All actuator settings, hardwiring and basic management data is accessed using the supplied Rotork Bluetooth Setting Tool Kit. Status and alarm data is additional to that shown on the home screen can also be accessed.

THE CONTROL COVER MUST NOT BE REMOVED. NO USER CONFIGURABLE SETTINGS ARE AVAILABLE WITHIN THE CONTROL ENCLOSURE. THE CONTROL COVER IS SEALED BY A QUALITY LABEL. REMOVAL OF BREAKS AN INVALIDATES WARRANTY.

This section gives details the basic settings that must be completed before the actuator is put into service.

ELECTRICAL OPERATION MUST NOT TAKE PLACE UNTIL THE BASIC SETTINGS HAVE BEEN MADE AND CHECKED.

The basic settings affect the correct operation of the valve to the actuator. If the actuator has been supplied with the valve, the valvemaker or supplier may have already made these settings.

⚠ Settings and operation must be verified to ensure operation and function test of the actuated valve.

THIS PUBLICATION PROVIDES INSTRUCTION ON MAKING THE BASIC SETTINGS ONLY.

For instructions on control and indication settings and, for information on Bluetooth, refer to PUB012-500.

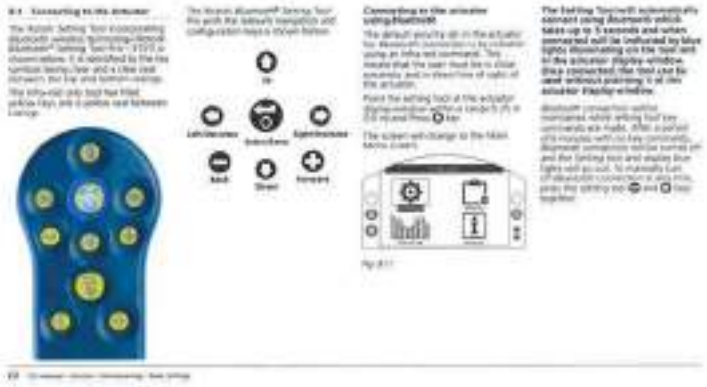

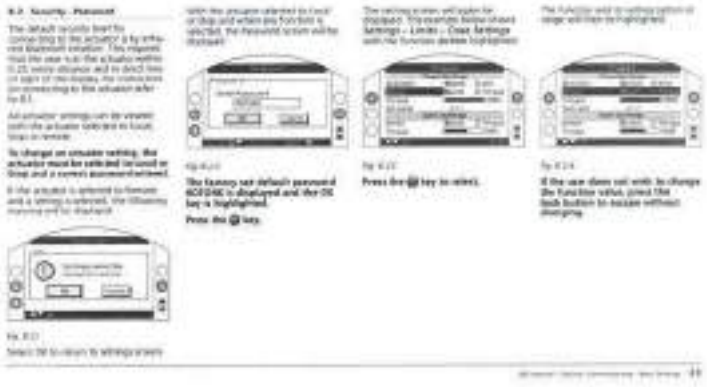

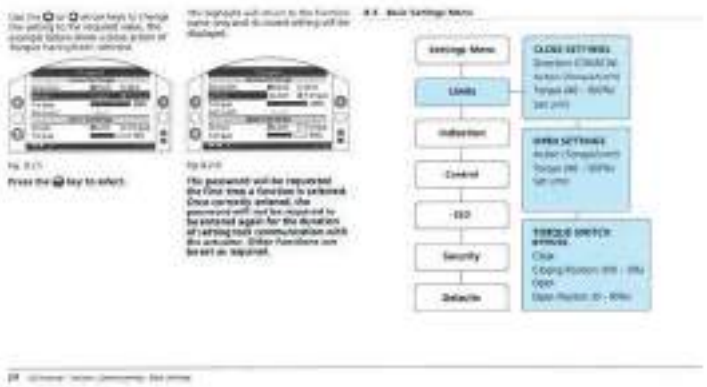

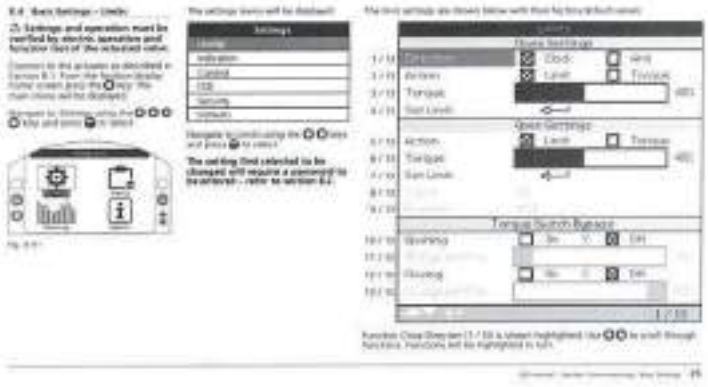

6.4 Close Settings

7 / 13. Close Direction

Here you can set the direction required to close the valve. Manually operate the actuator and valve to establish closing direction.

Press ⊖ to select Close Direction function. Use ⊖ or ⊖ to check required setting. Press ⊖ to set.

8 / 13. Close Action

The actuator can be configured close set torque for seating valve types in link for non-seating valve types.

⚠ Refer to Valve manufacturer for recommended setting. In the absence of valve maker information refer to the following table.

Valve Type	Close Action	Open Action
Venturi gate	Torque	Limit
Globe	Torque	Limit
Butterfly	Limit	Limit
Through Conduit	Limit	Limit
Ball	Limit	Limit
Plug	Limit	Limit
Slurry gate	Limit	Limit
Resilient	Limit	Limit
Knife/ Gate	Limit	Limit

Press ⊖ to select Close Action function. Use ⊖ or ⊖ to check required setting. Press ⊖ to set.

9 / 13. Close Torque

The value of torque available to close the valve can be set between 40% and 100% of rated. The actuator will stop at the set value in order not to damage.

Press ⊖ to select Close Torque function. Use ⊖ key to decrease value and ⊖ key to increase value.

Press ⊖ key to set.

10 / 13 Set Close Limit

Press ⊖ to select Close Limit function. The actuator will display the following instructions.

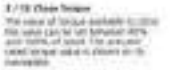

Fig. 6.11

Move the actuator and valve to the close position. Allow for overrun by winding down so to to 1 turn.

Press ⊖ to set the close limit position.

11 / 13. Open Settings

12 / 13. Open Action

The actuator can be configured open set torque for seating valve types in link for non-seating valve types.

⚠ Refer to Valve manufacturer for recommended setting. In the absence of valve maker information set open action to "Limit"

Press ⊖ to select Open Action function. Use ⊖ or ⊖ to check required setting. Press ⊖ to set.

13 / 13. Open Torque

The value of torque available to open the valve can be set between 40% and 100% of rated. The actuator will stop at the set value in order not to damage.

Press ⊖ to select Open Torque function. Use ⊖ key to decrease value and ⊖ key to increase value.

Press ⊖ to set.

7 / 10. Set Open Limit

Press ⊖ to select Open Limit function. The actuator will display the following instructions.

Fig. 6.12

Move the actuator and valve to the open position. Allow for overrun by winding down so to to 1 turn.

Press ⊖ to set the open limit position.

8 / 10. Turns Lock enabled

Shows the actuator output turns between the full Closed and Open limit positions.

9 / 10 Position Lock enabled

Shows the actuator current position in terms of % open.

Note: Turns and Position values do not update while being displayed on screen. To see updated values, use ⊖ key to return to Settings Menu, then select Limits.

10 / 10. Torque Switch Bypass

You default setting for opening and closing torque switch bypass is OFF. Torque protection acts as an inhibitor. Bypassing the torque protection allows torque up to approximately 150% of rated to be available. This alternative integrated should be consulted to confirm the valve, machine and interface components can withstand the additional torque/thrust.

10 / 10. Opening

Opening torque protection can be **bypassed** over a configurable portion of the opening stroke. When bypassed torque up to approximately 150% of rated torque is available for opening "stuck" valves.

Press ⊖ to select Opening Torque Switch Bypass function. Use ⊖ or ⊖ to check required setting.

Press ⊖ to set.

11 / 11. Opening Bypass position

When enabled (refer to 9 / 10), the position over the opening stroke where the torque protection is bypassed can be configured in the position range 0% (shut) to 95% open. Outside the bypass position, torque switch value will revert to that set after step 7 / 10.

Press ⊖ to select Opening Bypass Position function. Use ⊖ key to decrease value and ⊖ key to increase value. Press ⊖ to set.

10 / 10. Closing

Closing torque protection cannot be bypassed over a configurable portion of the closing stroke. When enabled torque up to approximately 150% of rated torque is available for closing the valve. Outside the bypass position torque switch value will revert to that set, refer to 2 / 10.

Press ⊖ to select Closing Torque Switch Bypass function. Use ⊖ or ⊖ to check required setting.

Press ⊖ to set.

10 / 10. Closing Bypass position

When enabled (refer to 11 / 10), the position over the Closing stroke where the torque protection is bypassed can be configured in the position range 100% (open) to 5% open.

Press ⊖ to select Closing Bypass Position function. Use ⊖ key to decrease value and ⊖ key to increase value. Press ⊖ to set.

8. Maintenance, Monitoring and Troubleshooting

Maintenance

Every Rotork actuator has been fully tested before despatch to give part of reliable field operation and design is robust, well-proved components in accordance with the intended duty given in the quotation.

The IQ actuator's unique double sealed, non-intrusive environmental protection for the exposed components.

The IQ actuator gearing is packed in an oil bath and is lubricated for life and does not need re-lubricating. Inside the oil the remained or like it must not be deliquate observed as premature failure may result.

Covers should not be removed for routine inspection as this may be detrimental to the future reliability of the actuator.

The electronic control module cover is tamperlike the Rotork quality control seal. It should not be removed as the module contains no user serviceable components.

All electrical power supplies to the actuator must be isolated before any maintenance or inspection or, unless an instant replacement of the battery.

Electrical supplies must be isolated before actuator covers are removed, refer to Safety Operations Instructions.

Routine maintenance should include the following:

- Check actuator to valve fixing bolts for tightness.
- Ensure valve stems and other moving parts are clean and properly lubricated.
- If the actuated valve is rarely operated, a routine operating schedule should be set up.
- Replace actuator batteries every 5 years.
- Check the actuator enclosure for damage (none is moving between).
- If there there is oil on exposed bolting or oil dust or condensation on the actuator.
- If there for any fault of actuator refer to section 11 for advisories.

The Actuator Battery

The battery supplies the actuator valve position indication when, handwheel and the optional display & LED only when the main power supply is turned off. In actuator, the current position is indicated and displayed when manual operation takes place.

Recharging is not required to retain the actuator settings or limit position changes.

With mains power switched off and without a battery there is when discharged, all configured settings are retained safely in EEPROM and position changes are indicated by the absolute encoder.

On power on, the correct current position will be displayed and the actuator will operate normally.

⚠ WARNING: The Battery holder in the actuator contain also protects the user from the hazardous live connections inside the actuator and therefore it must not be damaged. The actuator must be isolated or disconnected if the battery holder has to be removed from the actuator enclosure.

If a fault circuit has been incorporated into the battery function of the IQ, effectively reducing the overall drain and significantly increasing the battery life.

In normal circumstances battery replacement interval should not exceed 5 years. Ambient temperature and good operating conditions may affect battery life.

Battery level status is indicating on icon on the actuator display – refer to section 4.3.

If the battery icon is displayed the battery should be replaced to ensure correct power off valve position indication.

⚠ WARNING:

Battery Replacement

If the actuator is located within a hazardous area permission must be obtained in the form of a 'hot work permit' or other local regulations before removal and/or replacement of the battery.

Removal of the battery with the main electrical power switched off and due to power damage, usually time consuming and for the duration when there is no mains and battery power, it is therefore recommended that the battery is replaced with the main electrical supply to the actuator switched on.

Battery Removal

The actuator must be isolated to stop using the battery – refer to section 4.1. Remove the battery cover (labelled sealing plug located on the main operating cover for the battery box).

Remove the sealing plug using the appropriate Allen key ensuring the O-ring seal remains on the plug. Disconnect the battery wiring loom from the battery terminals. Using the black pull strap, lift the battery out of the rubber sealing gasket.

Fig. 8.11

Battery Types

For European hazardous area certified actuators (ATEX / IEC) only use alkaline, manganese dioxide battery or listed in Fig. 8.12 Battery Type Table.

For FM and CSA certified enclosures use an Ultralife U9VL, lithium manganese dioxide battery. Equivalent UL recognized lithium may be used.

For watertight (IP67) actuator enclosures Rotork recommends lithium manganese dioxide battery, however any equivalent IP67 battery may be used.

If in doubt regarding the correct battery type, contact Rotork.

Enclosure Type	Battery Type	Image
Watertight (IP67) actuator	Lithium MnO2	[illegible]
Hazardous Area (ATEX / IEC) actuator	Alkaline MnO2	[illegible]
Hazardous Area (FM / CSA) actuator	Alkaline MnO2	[illegible]

Fig. 8.12 Battery Type Table

Fitting Replacement Battery

Fit the sub-chute around the replacement battery and insert into the battery locating pocket. Reconnect the battery wiring loom to the battery terminals. Refit the battery seal/bung (ensure O-ring is in good condition and correctly fitted, replacement by spare if damaged) and fit the sealing plug to the IQ (refer to section 4.1).

Oil

Unless specially ordered for extreme climatic conditions, Rotork actuator are despatched with gearcase filled with **Lith 00EP** oil which is suitable for ambient temperatures ranging from -30 to +70 °C (-22 to +158 °F).

IQ actuators do not require regular oil changes due to factors: IQ design and lubricant.

Torque and Position Monitoring

The IQ range of actuators incorporate and inter, intermittent Torque & Position monitoring as standard. Torque & Position can be used to monitor valve performance during operation. The effect of process changes (differential pressure etc.) can be evaluated, tight spots in valve travel can be pinpointed as well as gauging the torque required through valve or guide, to an appropriate open and closed torque switch settings.

There a few home screen displays that indicate torque and position simultaneously. Refer to section 4.4.

Analogue Torque and Position indication

Fig. 8.13

Example shows that actuator at 35.0% open, producing 27% of rated torque. The warning triangle was also the actuator has torque trapped.

Note: The torque and position values displayed are dynamic and will show the actual torque and position values currently measured. After a torque trip, the torque value tends to drop away as the internal mechanical components relax or no one is present.

Digital Torque and Position indication

Fig. 8.14

Example shows that actuator at 35.0% open, producing 27% of rated torque. The status bar and warning triangle indicates that the actuator has torque trapped when closing.

Note: The actuator will trip on torque and stop when the value of torque reaches that set for the open (when opening) and closing (when closing) torque switches (refer to 6.7 and 6.8). Due to the effects of not be operable with valve/stem and valve resistance, the torque delivered and displayed may be higher.

10. Environmental

Find your advice on disposal at end of life of the product.
In all cases check local authority regulations before disposal.

Subject	Definition	Remarks / examples	Hazardous	Recyclable	EU Waste Code	Disposal
Batteries	Lithium	CR batteries	Yes	Yes	16 06 05	Will require special treatment before disposal, use specialist recycling or waste disposal contractor.
	Alkaline	Battery cell	Yes	Yes	16 06 04	
Electronic Devices (Equipment)	Printed Circuit Boards	All PCB's	Yes	Yes	16 01 21	See operator manual.
	Wire	All Products	Yes	Yes	17 04 11	
Oils	Lubricating oil	All	No	Yes	13 02 05	See operator manual.
Metals	Aluminium	Cast parts and cases	No	Yes	17 04 02	See manual recycled.
	Copper/Brass	Wire, PC pins, motor windings	No	Yes	17 04 01	
	Zinc	ZC-Latch Ring and associated components	No	Yes	17 04 04	
	Iron/Steel	Tools and bolts	No	Yes	17 04 05	
	Mixed Metals	All metal items	No	Yes	17 04 07	
Plastics	Glass Fibre reinforced	Cover, electronics cheese	No	No	17 02 03	Manual or general purpose waste.
	Unfilled	Gears	No	Yes	17 02 03	See operator manual.
Grease/Oil	Mineral & synthetic Mineral	Gearbox lubrication	Yes	Yes	13 02 05	Will require special treatment before disposal, use specialist recycling or waste disposal contractor.
	Multigrade	Gearbox lubrication	Yes	Yes	13 02 06	
	Food Grade	Gearbox lubrication	Yes	Yes	13 02 06	
	Greases	Gas manifold / linear drive	Yes	No	13 02 06	
Rubber	Seals & O-rings	Cover and shaft sealing	Yes	No	16 01 99	May require special treatment before disposal, use specialist waste disposal contractor.

11. Weights and Measures

Lubricating oil

Refer to actuator name plate. All actuators are lubricated using the oil grades specified below. They are factory filled for life and no further service is required.

Ambient temperature ranges from -20 to +70 °C (-4 to 158 °F) use NSF H1 food grade lubricating oil.

Ambient temperatures below -20 °C (-4 °F) adjust to AC 600 lubricating oil.

Food grade lubricating oil

In case you have 10 actuators, all be filled with Interlube GB Heavy food grade lubricating oil suitable for temperature range -20 to 70 °C (-4 to 158 °F).

Grease – Side handwheel

Extreme pressure multipurpose grease MULTI MOZ or equivalent. For low temperatures, use a grease suitable for use to -50 °C, such as Isoparaffin T1 oil.

Grease – Linear drive unit

EO, and IDAS, linear drive assemblies should be regularly lubricated using extreme pressure multipurpose grease MULTI MOZ or equivalent.

Grease – Gas assembly

Omega, use either MOBIL SHC / Unipaste/SHC or equivalent for all temperature ranges between -50 and +150 °C (58 and +302 °F).

Standard weight and lubricating oil capacities

Actuator Size	Weight kg (lbs)	Oil Capacities litres (pt. US)
10 FS	11 (24)	0.8 (1.7)
20 FS	11 (24)	0.8 (1.7)
30 FS	11 (24)	0.8 (1.7)
50 FS	14 (31)	1.1 (2.3)
75 FS	14 (31)	1.1 (2.3)
125 FS	14 (31)	1.1 (2.3)
10 FH	15 (33)	1.0 (2.1)
20 FH	15 (33)	1.0 (2.1)
30 FH	15 (33)	1.0 (2.1)
50 FH	19 (42)	1.1 (2.3)
75 FH	19 (42)	1.1 (2.3)
125 FH	19 (42)	1.1 (2.3)

Inverted installation

If inverted installation (rear, upside down) was specified with the order, fitting will still be the quantities shown in the table below and the actuator will be labelled "Factory filled with additional oil for inverted use". If not specified with order but later installation will be inverted, to ensure adequate lubrication the installer must top up the actuator installation using the top up oil quantity indicated in the table.

For top up location, refer to section 1.3.

Inverted installation lubricating oil capacities

Actuator Size	Oil Capacities litres (pt. US)	Top-up Quantity litres (pt. US)
10 FS, 10 FH top handwheel	1.0 (2.1)	0.1 (0.2)
10 FS, 10 FH side handwheel	1.4 (3.0)	0.4 (0.9)
20 FS, 20 FH top handwheel	1.0 (2.1)	0.1 (0.2)
20 FS, 20 FH side handwheel	1.4 (3.0)	0.3 (0.6)
30 FH	1.0 (2.1)	0.1 (0.2)
30 FS, 50, 50 FS, 75	1.5 (3.2)	0.4 (0.9)

12. IQ Approvals

Refer to actuator nameplate for unit specific approval details.

European – Hazardous Area

ATEX (94/9/EC) I/2 GD:

Ex d IIB T4 Gb

Ex tb IIIC T120°C Db, IP66 & IP68

Temperature -20°C to +70°C (-4°F to +158°F)
*Option -50°C to +70°C (-58°F to +158°F)
*Option -40°C to +70°C (-40°F to +158°F)
*Option -50°C to +40°C (-58°F to +104°F)

Ex d IIC T4 Gb

Ex tb IIIC T120°C Db, IP66 & IP68

Temperature -20°C to +70°C (-4°F to +158°F)
*Option -50°C to +70°C (-58°F to +158°F)
*Option -40°C to +70°C (-40°F to +158°F)
*Option -50°C to +40°C (-58°F to +104°F)

Ex de IIB T4 Gb

Ex tb IIIC T120°C Db, IP66 & IP68

Temperature -20°C to +70°C (-4°F to +158°F)
*Option -50°C to +70°C (-58°F to +158°F)
*Option -40°C to +70°C (-40°F to +158°F)
*Option -50°C to +40°C (-58°F to +104°F)

Ex de IIC T4 Gb

Ex tb IIIC T120°C Db, IP66 & IP68

Temperature -20°C to +70°C (-4°F to +158°F)
*Option -50°C to +70°C (-58°F to +158°F)
*Option -40°C to +70°C (-40°F to +158°F)
*Option -50°C to +40°C (-58°F to +104°F)

International – Hazardous Area

IECEx: IECEX/TR 0 & IECEX/BVS 1

Ex d IIB T4 Gb

Ex tb IIIC T120°C Db, IP66 & IP68

Temperature -20°C to +70°C (-4°F to +158°F)
*Option -50°C to +70°C (-58°F to +158°F)
*Option -40°C to +70°C (-40°F to +158°F)
*Option -50°C to +40°C (-58°F to +104°F)

Ex d IIC T4 Gb

Ex tb IIIC T120°C Db, IP66 & IP68

Temperature -20°C to +70°C (-4°F to +158°F)
*Option -50°C to +70°C (-58°F to +158°F)
*Option -40°C to +70°C (-40°F to +158°F)
*Option -50°C to +40°C (-58°F to +104°F)

Ex de IIB T4 Gb

Ex tb IIIC T120°C Db, IP66 & IP68

Temperature -20°C to +70°C (-4°F to +158°F)
*Option -50°C to +70°C (-58°F to +158°F)
*Option -40°C to +70°C (-40°F to +158°F)
*Option -50°C to +40°C (-58°F to +104°F)

Ex de IIC T4 Gb

Ex tb IIIC T120°C Db, IP66 & IP68

Temperature -20°C to +70°C (-4°F to +158°F)
*Option -50°C to +70°C (-58°F to +158°F)
*Option -40°C to +70°C (-40°F to +158°F)
*Option -50°C to +40°C (-58°F to +104°F)

USA – Hazardous Area

FM – Explosproof to NEC Series 000

Class I, Division 1, Groups C & D

Class II, Division 1, Groups E, F & G

Temperature -20°C to +70°C (-4°F to +158°F)
*Option -50°C to +70°C (-58°F to +158°F)
*Option -40°C to +70°C (-40°F to +158°F)
*Option -50°C to +40°C (-58°F to +104°F)

Canada – Hazardous Area

CSA Explosproof to C22.2 No. 30

Class I, Division 1, Groups C & D

Class II, Division 1, Groups E, F & G

Temperature -20°C to +70°C (-4°F to +158°F)
*Option -50°C to +70°C (-58°F to +158°F)
*Option -40°C to +70°C (-40°F to +158°F)
*Option -50°C to +40°C (-58°F to +104°F)

Class I, Division 1, Groups B, C & D

Class II, Division 1, Groups E, F & G

Temperature -20°C to +70°C (-4°F to +158°F)
*Option -50°C to +70°C (-58°F to +158°F)
*Option -40°C to +70°C (-40°F to +158°F)
*Option -50°C to +40°C (-58°F to +104°F)

International Non Hazardous

Water tight, IS 0948/57

IP66 & IP68, 17 metres for 72 hours

Temperature -20°C to +70°C (-4°F to +158°F)
*Option -50°C to +70°C (-58°F to +158°F)
*Option -40°C to +70°C (-40°F to +158°F)
*Option -50°C to +40°C (-58°F to +104°F)

US – Non Hazardous

NEMA Enclosure Type 4 & 5

Temperature -20°C to +70°C (-4°F to +158°F)
*Option -50°C to +70°C (-58°F to +158°F)
*Option -40°C to +70°C (-40°F to +158°F)

Canada – Non Hazardous

NEMA Enclosure Type 4 & 5

Temperature -20°C to +70°C (-4°F to +158°F)
*Option -50°C to +70°C (-58°F to +158°F)
*Option -40°C to +70°C (-40°F to +158°F)

Rotork can supply actuators to specified standards not listed above. For details please contact Rotork.

13. Approved Fuses

F21 = Bussman 170E7110 (rating as per manufacturer spec. Get actuator wiring diagram for manufacturer spec)

Type 1 = 250 mA anti-surge

Type 2 = 250 mA anti-surge

Type 3 = 150 mA anti-surge

F22 (4-20 mA safe wiring)

Bussman TR5 500 – 500 mA QuickMax or LPJ6 Fuse 21 – 100 mA QuickMax

14. Vibration, Shock and Noise

Standard IQ range actuators are suitable for applications where vibration and shock severity does not exceed the following:

Type	Level
Pipe-mounted actuators	Sprinkler rated for all vibration, shock and seismic loads up to 10 G, 500 Hz
Valve	To valve specification
Gearbox	As specified with low 1 frequency weight 1 to 10 Hz 0.1 G or greater during pump stop/start
Control room	Independent and non-cumulative 0.5 G generated from data for standard IEC 60068

15. Conditions of Safe Use

15.1 Thread details for ATEX and IECEx Approved actuators

Threaded Nameplate	Thread Size	Thread length	Actuator Type and Size
[illegible]	[illegible]	[illegible]	[illegible]
[illegible]	[illegible]	[illegible]	[illegible]
	[illegible]	[illegible]	[illegible]

15.2 Maximum communication Nameplate gaps for ATEX and IECEx approved actuators

Nameplate	Max. Gap (mm)	Min. Length (mm)	Actuator Type and Size
[illegible]	[illegible]	[illegible]	[illegible]
[illegible]	[illegible]	[illegible]	[illegible]
		[illegible]	[illegible]
		[illegible]	[illegible]
[illegible]	[illegible]	[illegible]	[illegible]
[illegible]	[illegible]	[illegible]	[illegible]
		[illegible]	[illegible]
		[illegible]	[illegible]
[illegible]	[illegible]	[illegible]	[illegible]
[illegible]	[illegible]	[illegible]	[illegible]
[illegible]	[illegible]	[illegible]	[illegible]
[illegible]	[illegible]	[illegible]	[illegible]
[illegible]	[illegible]	[illegible]	[illegible]
[illegible]	[illegible]	[illegible]	[illegible]
[illegible]	[illegible]	[illegible]	[illegible]
[illegible]	[illegible]	[illegible]	[illegible]
[illegible]	[illegible]	[illegible]	[illegible]
[illegible]	[illegible]	[illegible]	[illegible]
[illegible]	[illegible]	[illegible]	[illegible]
[illegible]	[illegible]	[illegible]	[illegible]
[illegible]	[illegible]	[illegible]	[illegible]
[illegible]	[illegible]	[illegible]	[illegible]

Note: Negative sign denotes an interference fit.

rotork

Redefining Flow Control

rotork Controls

UK
Rotork plc
tel +44 (0)1225 733200
fax +44 (0)1225 333467
email mail@rotork.com

USA
Rotork Controls Inc
tel +1 (585) 347 3564
fax +1 (585) 347 5598
email info@rotork.com

A full listing of our worldwide sales and service network is available on our website

www.rotork.com

PUB002-025-00
Date of Issue 11/15

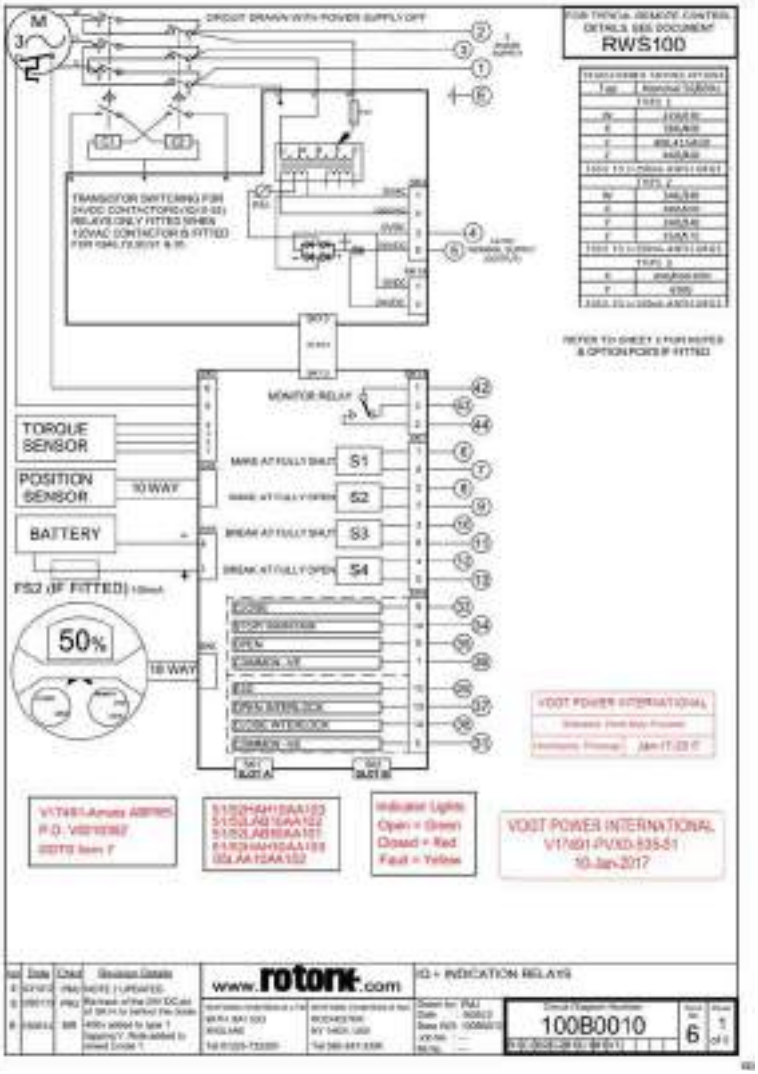

CIRCUIT DRAWN WITH POWER SUPPLY OFF

SLOT A

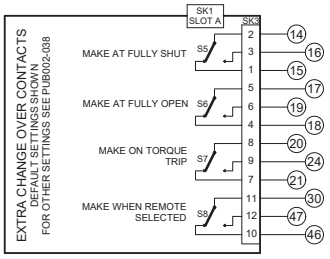

NOTES

1.FUSES:
-PS1 is a self-resetting fuse.
-Refer to publication PUB002-039 for approved fuses FS1 and FS2.
-Actuator rated voltage specified on nameplate. Voltage tolerance +/-10%, applies for rated torque performance; duty cycle is not guaranteed.

2.REMOTE CONTROL:
-For typical remote control circuits refer to:
-RWS indicated or PUB002-041.
-For DC and AC control, connect –ve/0V to terminal 36.
-(For negative switch / positive common, refer to RWS indicated).
-Control signal threshold voltages:
-DC: "on" ≥16Vdc / "off" ≤8Vdc, max 60Vdc.
-AC: "on" ≥60Vac / "off" ≤40Vac, max 120Vac.
-Control signal duration to be 300ms minimum.
-Maximum current drawn from remote control signals is:
-8mA at 24Vdc or 12mA at 120Vac.
-Supply provided on terminals 4 & 5:
-Intended for remote control.
-Max external load 5W at 24Vdc / 5VA at 120Vac

3.INDICATION:
-For typical position, status and alarm indication see PUB002-041.
-"S" contacts are user configurable and are shown in their default setting.
-Refer to PUB002-040 for functions and configuration instructions.
-Monitor Relay indicates actuator availability for remote control (shown "unavailable"). It can be configured to exclude local/remote selection.
-Refer to PUB002-040 for monitored functions and configuration instructions.
-Voltage applied to indication contacts must not exceed 150Vac
-Individual Switch current must not exceed 3.5A inductive, 5A resistive and no more than 8A in total for all 4 contacts.

4.BATTERY:
-Battery maintains local and remote "S" contact indication only.
-Refer to installation manual for approved replacement battery types.

See Sheet 1 for all Revision details/information

Circuit Diagram Number	Issue No	Sheet
100B0010	6	2 of 2

IQ3

Read operation instructions first.

- Observe safety instructions.
- These operation instructions are part of the product.
- Retain operation instructions during product life.
- Pass on instructions to any subsequent user or owner of the product.

Purpose of the document:

This document contains information for installation, commissioning, operation and maintenance staff. It is intended to support device installation and commissioning.

Reference documents:

Reference documents can be downloaded from the Internet (www.auma.com) or ordered directly from AUMA (refer to <Addresses>).

Table of contents

		Page
1.	**Safety instructions**	**5**
1.1.	Basic information on safety	5
1.2.	Range of application	5
1.3.	Applications in Ex zone 22 (option)	6
1.4.	Warnings and notes	6
1.5.	References and symbols	7
2.	**Identification**	**8**
2.1.	Name plate	8
2.2.	Short description	10
3.	**Transport, storage and packaging**	**11**
3.1.	Transport	11
3.2.	Storage	11
3.3.	Packaging	11
4.	**Assembly**	**12**
4.1.	Mounting position	12
4.2.	Handwheel fitting	12
4.3.	Multi-turn actuator: mount to valve/gearbox	12
4.3.1.	Output drive types B, B1 – B4 and E	12
4.3.1.1.	Multi-turn actuator (with output drive types B1 – B4 or E): mount to valve/gearbox	13
4.3.2.	Output drive type A	13
4.3.2.1.	Stem nut: finish machining	14
4.3.2.2.	Multi-turn actuator (with output drive type A): mount to valve	15
4.4.	Accessories for assembly	16
4.4.1.	Stem protection tube for rising valve stem	16
4.5.	Mounting positions of local controls	16
4.5.1.	Mounting positions: modify	17
5.	**Electrical connection**	**18**
5.1.	Basic information	18
5.2.	Connection with AUMA plug/socket connector	19
5.2.1.	Terminal compartment: open	20
5.2.2.	Cable connection	20
5.2.3.	Terminal compartment: close	22

5.3.	Accessories for electrical connection	22
5.3.1.	Controls mounted to wall bracket	22
5.3.2.	Parking frame	23
5.3.3.	Protection cover	23
5.3.4.	Double sealed intermediate frame	24
5.3.5.	Earth connection, external	24
6.	**Operation**	**25**
6.1.	Manual operation	25
6.1.1.	Manual operation: engage	25
6.1.2.	Manual operation: disengage	25
6.2.	Motor operation	25
6.2.1.	Local operation	25
6.2.2.	Actuator operation from remote	26
7.	**Indications**	**28**
7.1.	Indication lights	28
7.2.	Mechanical position indicator/running indication	28
8.	**Signals**	**30**
8.1.	Feedback signals via output contacts (binary)	30
8.2.	Feedback signals (analogue)	30
9.	**Commissioning (basic settings)**	**31**
9.1.	Heat-up time for low temperature version	31
9.2.	Switch compartment: open	31
9.3.	Torque switching: set	32
9.4.	Limit switching: set	33
9.4.1.	End position CLOSED (black section): set	33
9.4.2.	End position OPEN (white section): set	33
9.5.	Intermediate positions: set	34
9.5.1.	Running direction CLOSE (black section): set	34
9.5.2.	Running direction OPEN (white section): set	35
9.6.	Test run	35
9.6.1.	Direction of rotation: check	35
9.6.2.	Limit switching: check	36
9.6.3.	PTC tripping device (option): test	37
9.7.	Electronic position transmitter EWG 01.1	37
9.7.1.	Measuring range: set	38
9.7.2.	Current values: adjust	39
9.7.3.	LED end position signalling: switch on/off	39
9.8.	Potentiometer	39
9.8.1.	Potentiometer setting	40
9.9.	Electronic position transmitter RWG	40
9.9.1.	Measuring range: set	41
9.10.	Mechanical position indicator: set	41
9.11.	Switch compartment: close	42
10.	**Commissioning – controls settings**	**43**
10.1.	Controls: open	43
10.2.	Type of seating: set	43
10.3.	Push-to-run operation or self-retaining: set	44
10.4.	Running indication (blinker transmitter): activate/deactivate	45

10.5. Torque fault in collective fault signal: activate/deactivate 45
10.6. Positioner 45
10.6.1. Input ranges (signal type) for setpoint and actual value 46
10.6.2. Behaviour on loss of signal (actuator reaction) 46
10.6.3. Adjustment in end positions 48
10.6.4. Sensitivity setting 49
10.7. EMERGENCY command (EMERGENCY - OPEN/EMERGENCY - CLOSE) 50
10.8. Controls: close 51

11. Corrective action ... 52
11.1. Faults during commissioning 52
11.2. Fuses 53
11.2.1. Fuses within the actuator controls 53
11.2.2. Motor protection (thermal monitoring) 54

12. Servicing and maintenance ... 55
12.1. Preventive measures for servicing and safe operation 55
12.2. Maintenance 55
12.3. Disposal and recycling 56

13. Technical data ... 57
13.1. Technical data Multi-turn actuators 57
13.2. Technical data Actuator controls 60

14. Spare parts ... 63
14.1. Multi-turn actuators SA 07.2 – SA 16.2/SAR 07.2 – SAR 16.2 63
14.2. Actuator controls AUMA MATIC AM 01.1/AM 02.1 65

15. Certificates ... 67
15.1. Declaration of Incorporation and EC Declaration of Conformity 67

Index ... 68

Addresses ... 70

1. Safety instructions

1.1. Basic information on safety

Standards/directives

AUMA products are designed and manufactured in compliance with recognised standards and directives. This is certified in a Declaration of Incorporation and an EC Declaration of Conformity.

The end user or the contractor must ensure that all legal requirements, directives, guidelines, national regulations and recommendations with respect to assembly, electrical connection, commissioning and operation are met at the place of installation.

Safety instructions/warnings

All personnel working with this device must be familiar with the safety and warning instructions in this manual and observe the instructions given. Safety instructions and warning signs on the device must be observed to avoid personal injury or property damage.

Qualification of staff

Assembly, electrical connection, commissioning, operation, and maintenance must be carried out exclusively by suitably qualified personnel having been authorised by the end user or contractor of the plant only.

Prior to working on this product, the staff must have thoroughly read and understood these instructions and, furthermore, know and observe officially recognised rules regarding occupational health and safety.

Commissioning

Prior to commissioning, it is important to check that all settings meet the requirements of the application. Incorrect settings might present a danger to the application, e.g. cause damage to the valve or the installation. The manufacturer will not be held liable for any consequential damage. Such risk lies entirely with the user.

Operation

Prerequisites for safe and smooth operation:

- Correct transport, proper storage, mounting and installation, as well as careful commissioning.
- Only operate the device if it is in perfect condition while observing these instructions.
- Immediately report any faults and damage and allow for corrective measures.
- Observe recognised rules for occupational health and safety.
- Observe the national regulations.
- During operation, the housing warms up and surface temperatures > 60 °C may occur. To prevent possible burns, we recommend checking the surface temperature using an appropriate thermometer and wearing protective gloves, if required, prior to working on the device.

Protective measures

The end user or the contractor are responsible for implementing required protective measures on site, such as enclosures, barriers, or personal protective equipment for the staff.

Maintenance

To ensure safe device operation, the maintenance instructions included in this manual must be observed.

Any device modification requires prior consent of the manufacturer.

1.2. Range of application

AUMA multi-turn actuators are designed for the operation of industrial valves, e.g. globe valves, gate valves, butterfly valves, and ball valves.

Other applications require explicit (written) confirmation by the manufacturer.

The following applications are not permitted, e.g.:

- Industrial trucks according to EN ISO 3691
- Lifting appliances according to EN 14502
- Passenger lifts according to DIN 15306 and 15309
- Service lifts according to EN 81-1/A1

- Escalators
- Continuous duty
- Buried service
- Permanent submersion (observe enclosure protection)
- Potentially explosive areas, with the exception of zone 22
- Radiation exposed areas in nuclear power plants

No liability can be assumed for inappropriate or unintended use.

Observance of these operation instructions is considered as part of the device's designated use.

Information These operation instructions are only valid for the "clockwise closing" standard version, i.e. driven shaft turns clockwise to close the valve.

1.3. Applications in Ex zone 22 (option)

Actuators of the indicated series basically meet the requirements for applications in dust hazardous locations of ZONE 22 in compliance with the ATEX directive 94/9/EC.

The actuators are designed to meet enclosure protection IP68 and fulfil the requirements of EN 50281-1-1:1998 section 6 - Electrical apparatus for use in presence of combustible dust, requirements for category 3 electrical equipment - protected by enclosures.

To comply with all requirements of EN 50281-1-1:1998, it is imperative that the following points are observed:

- In compliance with the ATEX directive 94/9/EC, the actuators must be equipped with an additional identification – II3D IP6X T150 °C.
- The maximum surface temperature of the actuators, based on an ambient temperature of +40 °C in accordance with EN 50281-1-1 section 10.4, is +150 °C. In accordance with section 10.4, an increased dust deposit on the equipment was not considered for the determination of the maximum surface temperature.
- The correct connection of the thermoswitches or the PTC thermistors as well as fulfilling the requirements of the duty type and the technical data are prerequisites for compliance with the maximum surface temperature of devices.
- The connection plug may only be plugged in or pulled out when device is disconnected from the mains.
- The cable glands used also have to meet the requirements of category II3 D and must at least comply with enclosure protection IP67.
- The actuators must be connected by means of an external ground connection (accessory part) to the potential compensation or integrated into an earthed piping system.
- The threaded plug (part no. 511.0) or the stem protection tube with protective cap (part nos. 568.1 and 568.2) for sealing the hollow shaft must imperatively be mounted to guarantee tightness and therefore the combustible dust hazard protection.
- As a general rule, the requirements of EN 50281-1-1 must be respected in dust hazardous locations. During commissioning, service, and maintenance, special care as well as qualified and trained personnel are required for the safe operation of actuators.

1.4. Warnings and notes

The following warnings draw special attention to safety-relevant procedures in these operation instructions, each marked by the appropriate signal word (DANGER, WARNING, CAUTION, NOTICE).

DANGER **Indicates an imminently hazardous situation with a high level of risk. Failure to observe this warning could result in death or serious injury.**

WARNING **Indicates a potentially hazardous situation with a medium level of risk. Failure to observe this warning could result in death or serious injury.**

CAUTION **Indicates a potentially hazardous situation with a low level of risk. Failure to observe this warning may result in minor or moderate injury. May also be used with property damage.**

NOTICE **Potentially hazardous situation. Failure to observe this warning may result in property damage. Is not used for personal injury.**

Arrangement and typographic structure of the warnings

DANGER **Type of hazard and respective source!**

Potential consequence(s) in case of non-observance (option)

→ Measures to avoid the danger
→ Further measure(s)

Safety alert symbol ⚠ warns of a potential personal injury hazard.

The signal word (here: DANGER) indicates the level of hazard.

1.5. References and symbols

The following references and symbols are used in these instructions:

Information The term **Information** preceding the text indicates important notes and information.

Symbol for CLOSED (valve closed)

Symbol for OPEN (valve open)

✓ Important information before the next step. This symbol indicates what is required for the next step or what has to be prepared or observed.

< > **Reference to other sections**

Terms in brackets shown above refer to other sections of the document which provide further information on this topic. These terms are either listed in the index, a heading or in the table of contents and may quickly be found.

2. Identification

2.1. Name plate

Each device component (actuator, controls, motor) is equipped with a name plate.

Figure 1: Arrangement of name plates

[1] Actuator name plate
[2] Actuator controls name plate
[3] Motor name plate
[4] Additional plate, e.g. KKS plate (Power Plant Classification System)

Description of actuator name plate

Figure 2: Actuator name plate (example)

[1] Name of manufacturer
[2] Address of manufacturer
[3] **Type designation**
[4] **Order number**
[5] **Serial number**
[6] Speed
[7] Torque range in direction CLOSE
[8] Torque range in direction OPEN
[9] Type of lubricant
[10] Enclosure protection
[11] Permissible ambient temperature
[12] Can be assigned as an option upon customer request
[13] Can be assigned as an option upon customer request
[14] **Data Matrix code**

Description of actuator controls name plate

Figure 3: Actuator controls name plate

[1] **Type designation**
[2] Order number
[3] Serial number
[4] Terminal plan for actuator
[5] Wiring diagram for controls
[6] Mains voltage
[7] **AUMA power class switchgear**
[8] Permissible ambient temperature
[9] Enclosure protection
[10] **Control**
[11] Data Matrix code

Descriptions

Type designation

Figure 4: Type designation (example)

1. Type and size of actuator
2. Flange size

Type and size

These instructions apply to the following devices types and sizes:

SA 07.2, 07.6, 10.2, 14.2, 14.6, 16.2 = Multi-turn actuators for open-close duty

SA**R** 07.2, 07.6, 10.2, 14.2, 14.6, 16.2 = Multi-turn actuators for modulating duty

AM 01.1/02.1 = AUMA MATIC actuator controls

Order number

The product can be identified using this number and the technical data as well as order-related data pertaining to the device can be compiled.

Please always state this number for any product inquiries.

On the Internet at **http://www.auma.com**, we offer a service allowing authorised users to download order-related documents such as wiring diagrams and technical data (both in German and English), inspection certificates and the operation instructions when entering the order number.

Serial number

Table 1: Description of serial number (with example)

05	**14**	**MD12345**	
1st+2nd position: Assembly in week			
05	Week 05		
3rd+4th position: Year of production			
	14	Year of production: 2014	
All other positions			
		MD12345	Internal number for unambiguous product identification

AUMA power class for switchgear

The switchgear used in the actuator controls (reversing contactors/thyristors) are classified according to AUMA power classes (e.g. A1, B1, ...). The power class defines the max. permissible rated power (of the motor) the switchgear has been designed for. The rated power (nominal power) of the actuator motor is indicated in kW on the motor name plate. For the assignment of the AUMA power classes to the nominal power of the motor types, refer to the separate electrical data sheets.

For switchgear without assignment to any power classes, the actuator controls name plate does not indicate the power class but the max. rated power in kW.

Data Matrix code

When registered as authorised user, you may use the **AUMA Support App** to scan the Data Matrix code and directly access the order-related product documents without having to enter order number of serial number.

Figure 5: Link to the App store:

Control

Table 2: Control example (data on actuator controls name plate)

Input signal	Description
24 V DC	Control voltage 24 V DC for OPEN-CLOSE control via digital inputs (OPEN, STOP, CLOSE)
115 V AC	Control voltage 115 V AC for OPEN-CLOSE control via digital inputs (OPEN, STOP, CLOSE)
0/4 – 20 mA	Input current for setpoint control via analog input

2.2. Short description

Multi-turn actuator

Definition in compliance with EN ISO 5210:

A multi-turn actuator is an actuator which transmits to the valve a torque for at least one full revolution. It is capable of withstanding thrust.

AUMA multi-turn actuators are driven by an electric motor and are capable of withstanding thrust in combination with output drive type A. For manual operation, a handwheel is provided. Switching off in end positions may be either by limit or torque seating. Controls are required to operate or process the actuator signals.

Actuator controls

The AUMA MATIC actuator controls are used to operate AUMA actuators and are supplied ready for use. The controls can be mounted directly to the actuator but also separately on a wall bracket. The functions of the AUMA MATIC controls include standard valve control in OPEN - CLOSE duty, position indications and different signals right through to position control.

Local controls

Operation (via push buttons), setting and indication can be performed directly at the controls (contents of these instructions).

3. Transport, storage and packaging

3.1. Transport

For transport to place of installation, use sturdy packaging.

Hovering load!

Risk of death or serious injury.

→ Do NOT stand below hovering load.
→ Attach ropes or hooks for the purpose of lifting by hoist only to housing and NOT to handwheel.
→ Actuators mounted on valves: Attach ropes or hooks for the purpose of lifting by hoist to valve and NOT to actuator.
→ Actuators mounted to gearboxes: Attach ropes or hooks for the purpose of lifting by hoist only to the gearbox using eyebolts and NOT to the actuator.
→ Actuators mounted to controls: Attach ropes or hooks for the purpose of lifting by hoist only to the actuator and NOT to the controls.

3.2. Storage

Danger of corrosion due to inappropriate storage!

→ Store in a well-ventilated, dry room.
→ Protect against floor dampness by storage on a shelf or on a wooden pallet.
→ Cover to protect against dust and dirt.
→ Apply suitable corrosion protection agent to uncoated surfaces.

Long-term storage

If the device must be stored for a long period (more than 6 months) the following points must be observed in addition:

1. Prior to storage:
   Protect uncoated surfaces, in particular the output drive parts and mounting surface, with long-term corrosion protection agent.
2. At an interval of approx. 6 months:
   Check for corrosion. If first signs of corrosion show, apply new corrosion protection.

3.3. Packaging

Our products are protected by special packaging for transport when leaving the factory. The packaging consists of environmentally friendly materials which can easily be separated and recycled. We use the following packaging materials: wood, cardboard, paper, and PE foil. For the disposal of the packaging material, we recommend recycling and collection centres.

4. Assembly

4.1. Mounting position

AUMA actuators and actuator controls can be operated without restriction in any mounting position.

4.2. Handwheel fitting

Information For transport purposes, handwheels from a diameter of 400 mm are supplied separately.

Figure 6: Handwheel

[1] Spacer
[2] Input shaft
[3] Handwheel
[4] Circlip

1. If required, fit spacer [1] onto input shaft [2].
2. Slip handwheel [3] onto input shaft.
3. Secure handwheel [3] using the circlip [4] supplied.

4.3. Multi-turn actuator: mount to valve/gearbox

NOTICE

Danger of corrosion due to damage to paint finish and condensation!

→ Touch up damage to paint finish after work on the device.
→ After mounting, connect the device immediately to electrical mains to ensure that heater minimises condensation.

4.3.1. Output drive types B, B1 – B4 and E

Application
- For rotating, non-rising valve stem
- Not capable of withstanding thrust

Design Output drive bore with keyway:
- Types B1 – B4 with bore according to EN ISO 5210
- Types B and E with bore according to DIN 3210
- Later change from B1 to B3, B4, or E is possible.

Figure 7: Output drive

[1] Output drive types B, B1 – B4, E and C
[2] Output drive sleeve/output drive plug sleve with bore and keyway
[3] Circlip

Information Spigot at flanges should be loose fit.

4.3.1.1. Multi-turn actuator (with output drive types B1 – B4 or E): mount to valve/gearbox

1. Check if mounting flanges fit together.
2. Check whether bore and keyway match the input shaft.
3. Apply a small quantity of grease to the input shaft.
4. Place multi-turn actuator.
   Information: Ensure that the spigot fits uniformly in the recess and that the mounting faces are in complete contact.
5. Fasten multi-turn actuator with screws according to table.
   Information: We recommend applying liquid thread sealing material to the screws to avoid contact corrosion.
6. Fasten screws crosswise to a torque according to table.

Table 3: Tightening torques for screws

Screws	Tightening torque T_A [Nm]
Threads	**Strength class 8.8**
M8	25
M10	51
M12	87
M16	214
M20	431

4.3.2. Output drive type A

Application
- Output drive for rising, non-rotating valve stem
- Capable of withstanding thrust

Information To adapt the actuators to output drive types A available on site with flanges F10 and F14 (year of manufacture: 2009 and earlier), an adapter is required. The adapter can be ordered from AUMA.

4.3.2.1. Stem nut: finish machining

✓ This working step is only required if stem nut is supplied unbored or with pilot bore.

Figure 8: Design of output drive type A

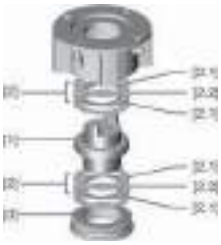

[1] Stem nut
[2] Bearing
[2.1] Bearing race
[2.2] Bearing rim
[3] Spigot ring

1. Remove spigot ring [3] from output drive.
2. Remove stem nut [1] together with bearings [2].
3. Remove bearing races [2.1] and bearing rims [2.2] from stem nut [1].
4. Drill and bore stem nut [1] and cut thread.
   Information: When fixing in the chuck, make sure stem nut runs true!
5. Clean the machined stem nut [1].
6. Apply sufficient Lithium soap EP multi-purpose grease to bearing rims [2.2] and bearing races [2.1], ensuring that all hollow spaces are filled with grease.
7. Place greased bearing rims [2.2] and bearing races [2.1] onto stem nut [1].
8. Re-insert stem nut [1] with bearings [2] into output drive.
   Information: Ensure that dogs or splines are placed correctly in the keyway of the hollow shaft.
9. Screw in spigot ring [3] until it is firm against the shoulder.

4.3.2.2. Multi-turn actuator (with output drive type A): mount to valve

Figure 9: Assembly with output drive type A

[1] Valve stem
[2] Output drive type A
[3] Screws to actuator
[4] Valve flange
[5] Screws to output drive

1. If the output drive type A is already mounted to the multi-turn actuator: Loosen screws [3] and remove output drive type A [2].
2. Check if the flange of output drive type A matches the valve flange [4].
3. Apply a small quantity of grease to the valve stem [1].
4. Place output drive type A on valve stem and turn until it is flush on the valve flange.
5. Turn output drive type A until alignment of the fixing holes.
6. Screw in fastening screws [5], however do not completely tighten.
7. Fit multi-turn actuator on the valve stem so that the stem nut dogs engage into the output drive sleeve.

↳ The flanges are flush with each other if properly engaged.

8. Adjust multi-turn actuator until alignment of the fixing holes.
9. Fasten multi-turn actuator with screws [3].
10. Fasten screws [3] crosswise with a torque according to table.

Table 4: Tightening torques for screws

Screws	Tightening torque T_A [Nm]
Threads	**Strength class 8.8**
M6	11
M8	25
M10	51
M12	87
M16	214
M20	431

11. Turn multi-turn actuator with handwheel in direction OPEN until valve flange and output drive A are firmly placed together.
12. Tighten fastening screws [5] between valve and output drive type A crosswise applying a torque according to table.

4.4. Accessories for assembly

4.4.1. Stem protection tube for rising valve stem

— Option —

Figure 10: Assembly of the stem protection tube

[1] Cap for stem protection tube
[2] Stem protection tube
[3] Sealing ring

1. Seal thread with hemp, Teflon tape, or thread sealing material.
2. Screw stem protection tube [2] into thread and tighten it firmly.
3. Push down the sealing ring [3] onto the housing.
4. Check whether cap for stem protection tube [1] is available and in perfect condition.

4.5. Mounting positions of local controls

The mounting position of the local controls is selected according to the order. If, after mounting the actuator to the valve or the gearbox on site, the local controls are in an unfavourable position, the mounting position can be changed at a later date. Four mounting positions are possible.

Figure 11: Mounting positions A and B

Figure 12: Mounting positions C and D

4.5.1. Mounting positions: modify

Hazardous voltage!

Risk of electric shock.

→ Disconnect device from the mains before opening.

1. Loosen screws and remove the local controls.
2. Loosen 3 screws of the board, turn board to the new position and fasten the screws.
3. Check whether O-ring is in good condition, correctly insert O-ring.
4. Turn local controls into new position and re-place.

Cable damage due to twisting or pinching!

Risk of functional failures.

→ Turn local controls by a maximum of 180°.

→ Carefully assemble local controls to avoid pinching the cables.

5. Fasten screws evenly crosswise.

5. Electrical connection

5.1. Basic information

Danger due to incorrect electrical connection

Failure to observe this warning can result in death, serious injury, or property damage.

→ The electrical connection must be carried out exclusively by suitably qualified personnel.

→ Prior to connection, observe basic information contained in this chapter.

→ After connection but prior to applying the voltage, observe the <Commissioning> and <Test run> chapters.

Wiring diagram/terminal plan

The pertaining wiring diagram/terminal plan (both in German and English) is attached to the device in a weather-proof bag, together with these operation instructions. It can also be requested from AUMA (state order number, refer to name plate) or downloaded directly from the Internet (http://www.auma.com).

Protection on site

For short-circuit protection and for disconnecting the actuator from the mains, fuses and disconnect switches have to be provided by the customer.

The current values for respective sizing is derived from the current consumption of the motor (refer to electrical data sheet) plus the current consumption of the controls.

Table 5: Current consumption controls

Mains voltage	Max. current consumption
100 to 120 V AC (±10 %)	575 mA
208 to 240 V AC (±10 %)	275 mA
380 to 500 V AC (±10 %)	160 mA
24 V DC (+20 %/–15 %) and AC motor	500 mA

Table 6: Maximum permissible protection

Switchgear	Rated power	Max. protection
Reversing contactor A1	up to 1.5 kW	16 A (gL/gG)
Reversing contactor A2	up to 7.5 kW	32 A (gL/gG)
Reversing contactor A3	up to 11 kW	63 A (gL/gG)
Thyristor B1	up to 1.5 kW	16 A (g/R) I^2t<1,500A^2s
Thyristor B2	up to 3 kW	32 A (g/R) I^2t<1,500A^2s
Thyristor B3	up to 5.5 kW	63 A (g/R) I^2t<5,000A^2s

If controls are mounted separately from actuator (controls on wall bracket): Consider length and cross section of connecting cable when defining the protection required.

Power supply for the controls (electronics)

If the controls (electronics) are supplied externally with 24 V DC, the power supply is smoothed via an internal 1,000 µF capacitor). When selecting a power supply, care must be taken to consider the capacitor inrush current upon powering the unit up.

Safety standards

All externally connected devices shall comply with the relevant safety standards.

Cable installation in accordance with EMC

Signal and bus cables are susceptible to interference.

Motor cables are interference sources.

- Lay cables being susceptible to interference or sources of interference at the highest possible distance from each other.
- The interference immunity of signal and bus cables increases if the cables are laid close to the earth potential.
- If possible, avoid laying long cables and make sure that they are installed in areas being subject to low interference.

- Avoid long parallel paths with cables being either susceptible to interference or interference sources.
- For the connection of remote position transmitters, screened cables must be used.

Type of current, mains voltage and mains frequency

Type of current, mains voltage and mains frequency must match the data on the motor name plate.

Figure 13: Motor name plate (example)

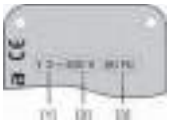

[1] Type of current
[2] Mains voltage
[3] Mains frequency (for 3-ph and 1-ph AC motors)

Connecting cables

- For device insulation, appropriate (voltage-proof) cables must be used. Specify cables for the highest occurring rated voltage.
- Use connecting cable with appropriate minimum rated temperature.
- For connecting cables exposed to UV radiation (outdoor installation), use UV resistant cables.

5.2. Connection with AUMA plug/socket connector

Cross sections AUMA plug/socket connector:

- Power terminals (U1, V1, W1, U2, V2, W2): max. 6 mm² flexible/10 mm² solid
- PE connection ⏚: max. 6 mm² flexible/10 mm² solid
- Control contacts (1 to 50): max. 2.5 mm²

5.2.1. Terminal compartment: open

Figure 14: Connection AUMA plug/socket connector, version S

[1] Cover
[2] Screws for cover
[3] O-ring
[4] Screws for socket carrier
[5] Socket carrier
[6] Cable entry
[7] Blanking plug
[8] Cable gland (not included in delivery)

DANGER

Hazardous voltage!

Risk of electric shock.

→ Disconnect device from the mains before opening.

1. Loosen screws [2] and remove cover [1].
2. Loosen screws [4] and remove socket carrier [5] from cover [1].
3. Insert cable glands [8] suitable for connecting cables.

➥ The enclosure protection IP.. stated on the name plate is only ensured if suitable cable glands are used.

Figure 15: Example: Name plate shows enclosure protection IP68

4. Seal unused cable entries [6] with suitable blanking plugs [7].
5. Insert the cables into the cable glands [8].

5.2.2. Cable connection

✓ Observe permissible cross sections.

NOTICE

Danger of corrosion: Damage due to condensation!

→ After mounting, commission the device immediately to ensure that heater minimises condensation.

1. Remove cable sheathing.
2. Strip wires.
3. For flexible cables: Use end sleeves according to DIN 46228.
4. Connect cables according to order-related wiring diagram.

WARNING

In case of a fault: Hazardous voltage while protective earth conductor is NOT connected!

Risk of electric shock.

→ Connect all protective earth conductors.
→ Connect PE connection to external protective earth conductor of connecting cables.
→ Start running the device only after having connected the protective earth conductor.

5. Tighten PE conductors firmly to PE connection using ring lugs (flexible cables) or loops (rigid cables).

Figure 16: PE connection

[1] Socket carrier
[2] Screw
[3] Washer
[4] Lock washer
[5] Protective earth with ring lugs/loops
[6] PE connection, symbol: ⏚

Information Some actuators are equipped with an additional motor heater. The motor heater minimises condensation within the motor.

5.2.3. Terminal compartment: close

Figure 17: Example: Version S

[1] Cover
[2] Screws for cover
[3] O-ring
[4] Screws for socket carrier
[5] Socket carrier
[6] Cable entry
[7] Blanking plug
[8] Cable gland (not included in delivery)

WARNING

Short-circuit due to pinching of cables!

Risk of electric shock and functional failures.

→ Carefully fit socket carrier to avoid pinching the cables.

1. Insert the socket carrier [5] into the cover [1] and fasten with screws [4].
2. Clean sealing faces of cover [1] and housing.
3. Check whether O-ring [3] is in good condition, replace if damaged.
4. Apply a thin film of non-acidic grease (e.g. petroleum jelly) to the O-ring and insert it correctly.
5. Fit cover [1] and fasten screws [2] evenly crosswise.
6. Fasten cable glands [8] applying the specified torque to ensure the required enclosure protection.

5.3. Accessories for electrical connection

— Option —

5.3.1. Controls mounted to wall bracket

The wall bracket allows separate mounting of controls and actuator.

Application
- When mounted in confined spaces.
- If the actuator is subjected to high temperatures.
- In case of heavy vibration of the valve.

Design Figure 18: Design principle with wall bracket

[1] Wall bracket
[2] Connecting cables
[3] Electrical connection of wall bracket (XM)
[4] Electrical connection of actuator (XA)
[5] Electrical connection of controls (XK) - customer plug

Observe prior to connection
- Permissible length of connecting cables: max. 100 m.
- If the actuator is equipped with a position transmitter (EWG/RWG): Connecting cables must be available as shielded version.
- Versions with potentiometer in the actuator are not suitable.
- We recommend using an AUMA cable set "LSW".
- If the AUMA cable set is not used: Use suitable flexible and screened connecting cables.
- When using connecting cables, e.g. of the heater or switch, requiring direct wiring from the actuator to the XK customer plug (XA-XM-XK, refer to wiring diagram), these connecting cables must be subject to an insulation test in compliance with EN 50178. Connecting cables of position transmitters (EWG, RWG, IWG, potentiometer) do not belong to this group. They may **not** be subject to an insulation test.

5.3.2. Parking frame

Application Parking frame for safe storage of a disconnected plug.

For protection against touching the bare contacts and against environmental influences.

Figure 19: Parking frame

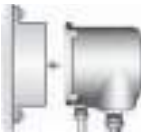

5.3.3. Protection cover

Protection cover for plug compartment when plug is removed.

The open terminal compartment can be closed using a protective cover (not illustrated).

5.3.4. Double sealed intermediate frame

When removing the electrical connection or due to leaky cable glands, ingress of dust and water into the housing may occur. This is prevented effectively by inserting the double sealed intermediate frame [2] between the plug/socket connector [1] and the housing of the device. The enclosure protection of the device (IP68) will not be affected, even if the electrical connection [1] is removed.

Figure 20: Electrical connection with double sealed intermediate frame

[1] Electrical connection
[2] Double sealed intermediate frame

5.3.5. Earth connection, external

As an option, the housing is equipped with an external earth connection (U-bracket) to connect the device to the equipotential earth bonding.

Figure 21: Earth connection

6. Operation

6.1. Manual operation

For purposes of setting and commissioning, in case of motor failure or power failure, the actuator may be operated manually. Manual operation is engaged by an internal change-over mechanism.

6.1.1. Manual operation: engage

NOTICE

Damage at the motor coupling due to faulty operation!

→ Engage manual operation only during motor standstill.

1. Press push button.

2. Turn handwheel in desired direction.
   → To close the valve, turn handwheel clockwise:
   ↳ Drive shaft (valve) turns clockwise in direction CLOSE.

6.1.2. Manual operation: disengage

Manual operation is automatically disengaged when motor is started again. The handwheel does not rotate during motor operation.

6.2. Motor operation

✓ Perform all commissioning settings and the test run prior to motor operation.

6.2.1. Local operation

The local operation of the actuator is performed using the push buttons of the local controls.

Figure 22: Local controls

[1] Push button for operation command in direction OPEN
[2] Push button Stop
[3] Push button for operation command in direction CLOSE
[4] Selector switch

CAUTION

Hot surfaces, e.g. possibly caused by high ambient temperatures or strong direct sunlight!

Danger of burns

→ Check surface temperature and wear protective gloves, if required.

→ Set selector switch [4] to position **Local control** (LOCAL).

↳ The actuator can now be operated using the push buttons [1 – 3]:
- Run actuator in direction OPEN: Press push button [1] ▬.
- Stop actuator: Press push button [2] **Stop**.
- Run actuator in direction CLOSE: Press push button [3] ▼.

Information The OPEN - CLOSE operation commands can be given either in push-to-run operation mode or in self-retaining mode. In self-retaining mode, the actuator runs to the defined end position after pressing the button, unless another command has been received beforehand.

6.2.2. Actuator operation from remote

→ Set selector switch to **Remote control** (REMOTE).

↳ Now, it is possible to operate the actuator via remote control, via operation commands (OPEN, STOP, CLOSE) or analogue setpoints (e.g. 0 – 20 mA).

Information For actuators equipped with positioner, it is possible to optionally **select** between **open-close duty** (REMOTE OPEN-CLOSE) and **modulating duty** (REMOTE SETPOINT). Selection is made via REMOTE MANUAL input, e.g. based on a 24 V DC signal (refer to wiring diagram).

Behaviour in modulating duty for version with positioner:

In case of signal loss of setpoint E1 or actual value E2, the actuator moves to a preset position. The following reactions are possible:

- **Fail as is:** Actuator stops immediately and remains in this position.
- **Fail close:** Actuator moves the valve to end position CLOSED.
- **Fail open:** Actuator moves the valve to end position OPEN.

The behaviour on loss of signal can be set via a switch in the controls.

7. Indications

7.1. Indication lights

Figure 23: Local controls with indication lights

[1] illuminated (default: green): End position OPEN reached
[2] illuminated (default: red): Collective fault signal
[3] illuminated (default: yellow): End position CLOSED reached

Information The three indication lights can be provided in different colours (deviating from the standard).

Collective fault signal The collective fault signal [2] appears if one of the following events occurs (default configuration):

- Torque fault: The set torque was exceeded before reaching an end position. (This signal can be activated/deactivated via a switch in the controls.)
- Thermal fault: Motor protection has tripped, i.e. the motor is overheated.
- Phase failure: One phase is missing (3-ph AC motors only).
- PTC tripping device: Test complete

Running indication If the actuator is equipped with a blinker transmitter (wiring diagram designation: S5), indication lights [1] and [3] can be used as running indication. The running indication can be activated/deactivated via a switch in the controls. If the running indication is active, the respective indication light blinks during operation.

7.2. Mechanical position indicator/running indication

— Option —

Mechanical position indicator:

- Continuously indicates the valve position
  (For complete travel from OPEN to CLOSED or vice versa, the indicator disc [2] rotates by approximately 180° to 230°.)
- Indicates whether the actuator is running (running indication)
- Indicates that the end positions are reached (via indicator mark [3])

Figure 24: Mechanical position indicator

[1] Cover
[2] Indicator disc
[3] Mark
[4] Symbol for position OPEN
[5] Symbol for position CLOSED

8. Signals

8.1. Feedback signals via output contacts (binary)

The output contacts can be used to indicate operation modes of the actuator or the controls as binary signals.

The signals are assigned according to the order. Example:

Output contact open = end position CLOSED not reached

Output contact closed = end position CLOSED reached

Collective fault signal Switches: 1 NC and 1 NO (standard)

Designation in the wiring diagram: K9

The collective fault signal appears if one of the following events occurs (default configuration):

- Torque fault: The set torque was exceeded before reaching an end position. (This signal can be activated/deactivated via a switch in the controls.)
- Thermal fault: Motor protection has tripped, i.e. the motor is overheated.
- Phase failure: One phase is missing (3-ph AC motors only).
- PTC tripping device: Test complete

4 output contacts: Switches: 1 NC (standard)

Designation in the wiring diagram: K5, K6, K7, K8

Default configuration:

- K5: Selector switch is in position **Remote control** (REMOTE).
- K6: Selector switch is in position **Local control** (LOCAL).
- K7: End position OPEN reached
- K8: End position CLOSED reached

8.2. Feedback signals (analogue)

— (Option) —

If the actuator is equipped with a position transmitter (EWG, RWG or potentiometer), an analogue position feedback signal is available.

Valve position Signal: E2 = 0/4 – 20 mA (galvanically isolated)

Designation in the wiring diagram: E2 (actual value)

9. Commissioning (basic settings)

1. Set selector switch to position **0** (OFF).

Information: The selector switch is not a mains switch. When positioned to **0** (OFF), the actuator cannot be operated. The controls' power supply is maintained.

2. Switch on the power supply.
   Information: Please consider the heat-up time for ambient temperatures below –20 °C.
3. Perform basic settings.

9.1. Heat-up time for low temperature version

Please note that for low temperature versions, the controls require a heat-up time.

This heat-up time is applicable in case the actuator and the controls are not live and have cooled down to ambient temperature. Under these conditions and after connection to the voltage supply, the following heat-up times must be complied with prior to commissioning:

For –50 °C = 60 min.

For –60 °C = 80 min.

Figure 25: Sketch illustrating the heat-up time

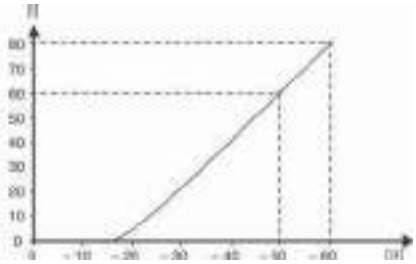

[t] Heat-up time in minutes
[ϑ] Ambient temperature in °C

9.2. Switch compartment: open

The switch compartment must be opened to perform the following settings (options).

1. Loosen screws [2] and remove cover [1] from the switch compartment.

2. If indicator disc [3] is available:
   Remove indicator disc [3] using a spanner (as lever).
   Information: To avoid damage to paint finish, use spanner in combination with soft object, e.g. fabric.

9.3. Torque switching: set

Once the set torque is reached, the torque switches will be tripped (overload protection of the valve).

Information The torque switches may also trip during manual operation.

NOTICE

Valve damage due to excessive tripping torque limit setting!

→ The tripping torque must suit the valve.
→ Only change the setting with the consent of the valve manufacturer.

Figure 26: Torque measuring heads

[1] Torque switching head black in direction CLOSE
[2] Torque switching head white in direction OPEN
[3] Lock screws
[4] Torque dials

1. Loosen both lock screws [3] at the indicator disc.

2. Turn torque dial [4] to set the required torque (1 da Nm = 10 Nm). Example:
   - Black torque switching head set to approx. 25 da Nm ≙ 250 Nm for direction CLOSE
   - White torque switching head set to approx. 20 da Nm ≙ 200 Nm for direction OPEN
3. Fasten lock screws [3] again.
   Information: Maximum tightening torque: 0.3 – 0.4 Nm

↳ The torque switch setting is complete.

9.4. Limit switching: set

The limit switching records the travel. When reaching the preset position, switches are operated.

Figure 27: Setting elements for limit switching

Black section:
[1] Setting spindle: End position CLOSED
[2] Pointer: End position CLOSED
[3] Mark: End position CLOSED is set
White section:
[4] Setting spindle: End position OPEN
[5] Pointer: End position OPEN
[6] Mark: End position OPEN is set

9.4.1. End position CLOSED (black section): set

1. Engage manual operation.
2. Turn handwheel clockwise until valve is closed.
3. Turn handwheel by approximately half a turn (overrun) in the opposite direction.
4. **Press down** and turn setting spindle [1] with screw driver in direction of the arrow and observe the pointer [2]: While a ratchet click is felt and heard, the pointer [2] moves 90° every time.
5. If the pointer [2] is 90° from mark [3]: Continue turning slowly.
6. If the pointer [2] moves to mark [3]: Stop turning and release setting spindle.

↳ The end position CLOSED setting is complete.

7. If you override the tripping point inadvertently (ratchet click is heard after the pointer has snapped): Continue turning the setting spindle in the same direction and repeat setting process.

9.4.2. End position OPEN (white section): set

1. Engage manual operation.
2. Turn handwheel counterclockwise until valve is open.

3. Turn handwheel by approximately half a turn (overrun) in the opposite direction.
4. **Press down** and turn setting spindle [4] with screw driver in direction of the arrow and observe the pointer [5]: While a ratchet click is felt and heard, the pointer [5] moves 90° every time.
5. If the pointer [5] is 90° from mark [6]: Continue turning slowly.
6. If the pointer [5] moves to mark [6]: Stop turning and release setting spindle.

↳ The end position OPEN setting is complete.

7. If you override the tripping point inadvertently (ratchet click is heard after the pointer has snapped): Continue turning the setting spindle in the same direction and repeat setting process.

9.5. Intermediate positions: set

— Option —

Actuators equipped with DUO limit switching contain two intermediate position switches. One intermediate position may be set for each running direction.

Figure 28: Setting elements for limit switching

Black section:
[1] Setting spindle: Running direction CLOSE
[2] Pointer: Running direction CLOSE
[3] Mark: Intermediate position CLOSED is set
White section:
[4] Setting spindle: Running direction OPEN
[5] Pointer: Running direction OPEN
[6] Mark: Intermediate position OPEN is set

Information After 177 turns (control unit for 1 – 500 turns/stroke) or 1,769 turns (control unit for 1 – 5,000 turns/stroke), the intermediate switches release the contact.

9.5.1. Running direction CLOSE (black section): set

1. Move valve in direction CLOSE to desired intermediate position.
2. If you override the tripping point inadvertently: Turn valve in opposite direction and approach intermediate position again in direction CLOSE.
   Information: Always approach the intermediate position in the same direction as in later electrical operation.
3. **Press down** and turn setting spindle [1] with screw driver in direction of the arrow and observe the pointer [2]: While a ratchet click is felt and heard, the pointer [2] moves 90° every time.
4. If the pointer [2] is 90° from mark [3]: Continue turning slowly.
5. If the pointer [2] moves to mark [3]: Stop turning and release setting spindle.

↳ The intermediate position setting in running direction CLOSE is complete.

6. If you override the tripping point inadvertently (ratchet click is heard after the pointer has snapped): Continue turning the setting spindle in the same direction and repeat setting process.

9.5.2. Running direction OPEN (white section): set

1. Move valve in direction OPEN to desired intermediate position.
2. If you override the tripping point inadvertently: Move valve in opposite direction and approach intermediate position again in direction OPEN (always approach the intermediate position in the same direction as in later electrical operation).
3. **Press down** and turn setting spindle [4] with screw driver in direction of the arrow and observe the pointer [5]: While a ratchet click is felt and heard, the pointer [5] moves 90° every time.
4. If the pointer [5] is 90° from mark [6]: Continue turning slowly.
5. If the pointer [5] moves to mark [6]: Stop turning and release setting spindle.

↳ The intermediate position setting in running direction OPEN is complete.

6. If you override the tripping point inadvertently (ratchet click is heard after the pointer has snapped): Continue turning the setting spindle in the same direction and repeat setting process.

9.6. Test run

Perform test run only once all settings previously described have been performed.

9.6.1. Direction of rotation: check

NOTICE

Valve damage due to incorrect direction of rotation!

→ If the direction of rotation is wrong, switch off immediately (press STOP).
→ Eliminate cause, i.e. correct phase sequence for cable set wall bracket.
→ Repeat test run.

1. Move actuator manually to intermediate position or to sufficient distance from end position.
2. Set selector switch to position **Local control** (LOCAL).

3. Switch on actuator in running direction CLOSE and observe the direction of rotation:
   with indicator disc: step 4
   without indicator disc: step 5 (hollow shaft)
   → Switch off before reaching the end position.

4. With indicator disc:
   → Observe direction of rotation.
   ➥ The direction of rotation is correct, if **actuator runs in direction CLOSE** and **indicator disc turns counterclockwise**.

5. Without the indicator disc:
   → Unscrew threaded plug [1] and seal [2] or cap for stem protection tube [4] and observe direction of rotation at hollow shaft [3] or the stem [5].

➥ The direction of rotation is correct, if **actuator runs in direction CLOSE** and hollow shaft or stem **turn clockwise**.

Figure 29: Hollow shaft/stem

[1] Threaded plug
[2] Seal
[3] Hollow shaft
[4] Cap for stem protection tube
[5] Stem
[6] Stem protection tube

9.6.2. Limit switching: check

1. Set selector switch to position **Local control** (LOCAL).

2. Operate actuator using push buttons OPEN - STOP - CLOSE.

➥ The limit switching is set correctly if (default indication):
- the yellow indication light is illuminated in end position CLOSED
- the green indication light is illuminated in end position OPEN
- the indication lights go out after travelling into the opposite direction.

➥ The limit switching is set incorrectly if:
- the actuator comes to a standstill before reaching the end position
- the red indication light is illuminated (torque fault).

3. If the end position setting is incorrect: Reset limit switching.
4. If the end position setting is correct and no options (e.g. potentiometer, position transmitter) are available: Close switch compartment.

9.6.3. PTC tripping device (option): test

1. Turn selector switch to position **Test** (spring return).

➥ If the PTC tripping device is working properly, the tripping of the motor protection is signalled via the red indication light "collective fault signal" on the local controls.

2. Turn selector switch to position **Reset**.

➥ The fault signal is reset if the device is working properly.

3. If no fault signal is initiated: Request AUMA service to check both wiring and selector switch.

9.7. Electronic position transmitter EWG 01.1

— Option —

The electronic position transmitter EWG 01.1 signals the remote position or the valve position. On the basis of the actual valve position sensed by hall sensor, a current signal between 0 – 20 mA or 4 – 20 mA is generated.

Technical data

Table 7: EWG 01.1

Data	3-wire or 4-wire system	2-wire system
Output current I_A	0 – 20 mA, 4 – 20 mA	4 – 20 mA
Power supply U_V 1)	24 V DC (18 – 32 V)	24 V DC (18 – 32 V)
Max. current consumption	LED off = 26 mA, LED on = 27 mA	20 mA
Max. load R_B	600 Ω	$(U_V – 12 V)/20 mA$
Impact of power supply	0.1 %	
Load influence	0.1 %	
Temperature impact	< 0.1 ‰/K	
Ambient temperature2)	–60 °C to +80 °C	

1) Power supply possible via: AC, AM controls or external power supply
2) Depending on temperature range of the actuator: Refer to name plate

Setting elements

The EWG is housed in the actuator switch compartment. The switch compartment must be opened to perform any settings. ➔ Refer to <Switch compartment: open>.

All settings are made via the two push buttons [S1] and [S2].

Figure 30: View on control unit when switch compartment is open

[S1] Push button: Set 0/4 mA
[S2] Push button: Set 20 mA
LED Optical aid for setting
[1] Measuring point (+) 0/4 – 20 mA
[2] Measuring point (–) 0/4 – 20 mA

The output current (measuring range 0 – 20 mA) can be checked at measuring points [1] and [2].

Table 8: Short overview on push button functions

Push buttons	Function
[S1] + [S2]	→ press simultaneously for 5 s: Activate setting mode
[S1]	→ press in setting mode for 3 s: Set 4 mA → press in setting mode for 6 s: Set 0 mA → press in operation for 3 s: Switch on/off LED end position signalling. → touch in end position: Reduce current value by 0.02 mA
[S2]	→ press in setting mode for 3 s: Set 20 mA → press in operation for 3 s: Switch on/off LED end position signalling. → touch in end position: Increase current value by 0.02 mA

9.7.1. Measuring range: set

For measuring range setting, voltage must be applied at the position transmitter.

Information

- Both measuring ranges 0/4 – 20 mA and 20 – 0/4 mA (inverse operation) can be set.
  During setting process, the measuring range (normal or inverse operation) is assigned to the end positions by push button S1/S2 assignment.
- Setting mode activating clears the setting in both end positions and sets the output current to a value of 3.5 mA. After activation, both end values (0/4 mA and 20 mA) need to be reset.
- In case of inadvertent incorrect adjustment, the settings can always be reset by renewed activation of the setting mode (simultaneous pressing of [S1] and [S2]).

Activate setting mode

1. Press both push buttons [S1] and [S2] and hold down for 5 seconds:

➥ By pulsing double flashes, the LED indicates that the setting mode is correctly activated:

➥ For any other LED flash sequence (single/triple flashing): ➔ Refer to <Faults during commissioning>.

Set measuring range

2. Operate valve in one of the end positions (OPEN/CLOSED).
3. Set desired output current (0/4 mA or 20 mA):
   → for **4 mA**: Hold down push button [S1] for approx. 3 seconds, until **LED is slowly blinking**.
   → for **0 mA**: Hold down push button [S1] for approx. 6 seconds, until **LED is blinking fast**.
   → for **20 mA**: Hold down push button [S2] for approx. 3 seconds, until **LED is illuminated**.
4. Operate valve into opposite end position.

➥ The value set in end position (0/4 mA or 20 mA) does not change during travel in setting mode.

5. Perform setting in the second end position following the same steps.
6. Approach both end positions again to check the setting.
   → If the measuring range cannot be set:
   Refer to <Faults during commissioning>.
   → If the current values (0/4/20 mA) are incorrect:
   Refer to <Current values: adjust>.
   → If the current value fluctuates (e.g. between 4.0 – 4.2 mA):
   <LED end position signalling: switch on/off>.

9.7.2. Current values: adjust

The current values (0/4/20 mA) set in end positions can be adjusted at any time. Conventional values are e.g. 0.1 mA (instead of 0 mA) or 4.1 mA (instead 4 mA).

Information

If the current value fluctuates (e.g. between 4.0 – 4.2 mA), the <LED end position signalling> must be switched on for current adjustment.

→ Operate valve in desired end position (OPEN/CLOSED).
   → Reduce current value: Press push button [S1]
   (the current is reduced by 0.02 mA every time the push button is pressed)
   → Increase current value Press push button [S2]
   (the current is increased by 0.02 mA every time the push button is pressed)

9.7.3. LED end position signalling: switch on/off

The LED behaviour for end position reached can be set as follows: blinking/continuous illumination or no illumination. During setting mode, end positions signalling is switched on.

Switching on and off

1. Operate valve in one of the end positions (OPEN/CLOSED).
2. Hold down push buttons [S1] or [S2] for approx. 3 seconds.

➥ End position signalling is switched on or off.

Table 9: LED behaviour when end position signalling is switched on

Set output current	LED behaviour in end position
4 mA	LED is blinking slowly
0 mA	LED is blinking fast
20 mA	LED is illuminated

9.8. Potentiometer

— Option —

The potentiometer is used as travel sensor and records the valve position.

Information This setting is only required if the potentiometer is directly wired to the customer connection XK (refer to wiring diagram).

Setting elements The potentiometer is housed in the actuator switch compartment. The switch compartment must be opened to perform any settings. ➔ Refer to <Switch compartment: open>.

Setting is made via potentiometer [1].

Figure 31: View on control unit

[1] Potentiometer

9.8.1. Potentiometer setting

Information Due to the ratio of the reduction gearing, the complete resistance range/stroke is not always covered. Therefore, external adjustment (setting potentiometer) must be provided.

1. Move valve to end position CLOSED.
2. Turn potentiometer [1] clockwise to the stop.
   ➥ End position CLOSED corresponds to 0 %
   ➥ End position OPEN corresponds to 100 %
3. Turn potentiometer [1] slightly in opposite direction.
4. Perform fine-tuning of the zero point at external setting potentiometer (for remote indication).

9.9. Electronic position transmitter RWG

— Option —

The electronic position transmitter RWG records the valve position. On the basis of the actual position value measured by the potentiometer (travel sensor), it generates a current signal between 0 – 20 mA or 4 – 20 mA.

Technical data

Table 10: RWG 4020

Data	3-wire or 4-wire system	2-wire system
Output current I_a	0 – 20 mA, 4 – 20 mA	4 – 20 mA
Power supply U_V [1]	24 V DC (18 – 32 V)	14 V DC + (I x R_B), max. 30 V
Max. current consumption	24 mA at 20 mA output current	20 mA
Max. load R_B	600 Ω	(U_V – 14 V)/20 mA
Impact of power supply	0.1 %/V	0.1 %/V
Load influence	0.1 %/(0 – 600 Ω)	0.1 %/100 Ω
Temperature impact	< 0.3 %/K	
Ambient temperature[2]	–60 °C to +80 °C	
Transmitter potentiometer	5 kΩ	

1) Power supply possible via: AC, AM controls or external power supply
2) Depending on temperature range of the actuator: Refer to name plate

Setting elements The RWG is housed in the actuator switch compartment. The switch compartment must be opened to perform any settings. Refer to <Switch compartment: open>.

Setting is made via three potentiometers [1], [2] and [3].

Figure 32: View on control unit when switch compartment is open

[1] Potentiometer (travel sensor)
[2] Potentiometer min. (0/4 mA)
[3] Potentiometer max. (20 mA)
[4] Measuring point (+) 0/4 – 20 mA
[5] Measuring point (–) 0/4 – 20 mA

The output current (measuring range 0 – 20 mA) can be checked at measuring points [4] and [5].

9.9.1. Measuring range: set

For measuring range setting, voltage must be applied at the position transmitter.

1. Move valve to end position CLOSED.
2. Connect ammeter for 0 – 20 mA to measuring points [4 and 5].
3. Turn potentiometer [1] clockwise to the stop.
4. Turn potentiometer [1] slightly in opposite direction.
5. Turn potentiometer [2] clockwise until output current starts to increase.
6. Turn potentiometer [2] in opposite direction until the following value is reached:
   - for 0 – 20 mA approx. 0.1 mA
   - for 4 – 20 mA approx. 4.1 mA
   ➥ This ensures that the signal remains above the dead and live zero point.
7. Move valve to end position OPEN.
8. Set potentiometer [3] to end value 20 mA.
9. Approach end position CLOSED again and check minimum value (0.1 mA or 4.1 mA). If necessary, correct the setting.

Information If the maximum value cannot be reached, the selection of the reduction gearing must be checked.

9.10. Mechanical position indicator: set

— Option —

1. Place indicator disc on shaft.
2. Move valve to end position CLOSED.

3. Turn lower indicator disc until symbol ⊥ (CLOSED) is in alignment with the mark ▲ on the cover.

4. Move actuator to end position OPEN.
5. Hold lower indicator disc in position and turn upper disc with symbol ⊤ (OPEN) until it is in alignment with the mark ▲ on the cover.

6. Move valve to end position CLOSED again.
7. Check settings:
   If the symbol ⊥ (CLOSED) is no longer in alignment with mark ▲ on the cover:
   7.1 Repeat setting procedure.
   7.2 Check whether the appropriate reduction gearing has been selected, if required.

9.11. Switch compartment: close

NOTICE

Danger of corrosion due to damage to paint finish!

→ Touch up damage to paint finish after work on the device.

1. Clean sealing faces of housing and cover.
2. Check whether O-ring [3] is in good condition, replace if damaged.
3. Apply a thin film of non-acidic grease (e.g. petroleum jelly) to the O-ring and insert it correctly.

4. Place cover [1] on switch compartment.
5. Fasten screws [2] evenly crosswise.

10. Commissioning – controls settings

The controls are set in the factory according to the order. The settings only have to be changed if the device is used for applications other than those specified in the order. In case the device is equipped with a positioner (option), subsequent setting may be required.

The following settings are described in these operation instructions:

- Type of seating (limit or torque seating): set
- Push-to-run operation or self-retaining: set
- Running indication (blinker transmitter) (option): activate/deactivate
- Torque fault in collective fault signal: activate/deactivate
- Positioner setting (option)

10.1. Controls: open

DANGER

Hazardous voltage!

Risk of electric shock.

→ Disconnect device from the mains before opening.

NOTICE

Electrostatic discharge ESD!

Risk of damage to electronic components.

→ Earth both operators and devices.

→ Loosen screws [2] and remove cover [1].

10.2. Type of seating: set

NOTICE

Valve damage due to incorrect setting!

→ The type of seating must suit the valve.
→ Only change the setting with the consent of the valve manufacturer.

The type of seating can be set via two DIP switches on the logic board.

Limit seating The limit switching is set in such a way that the actuator switches off at the desired switching points. The torque switching acts as overload protection for the valve.

Torque seating The torque switching is set to the desired tripping torque. After reaching the tripping torque, the actuator is turned off.

The limit seating is used to signal that the limit switching will trip shortly **before** reaching the set tripping torque. If this is not the case, either the indication light on the local controls or the alarm contact K9 (collective fault signal) will signal a fault.

→ Set type of seating for end positions via DIP switches [S1] and [S3].

Figure 33: DIP switches on logic board

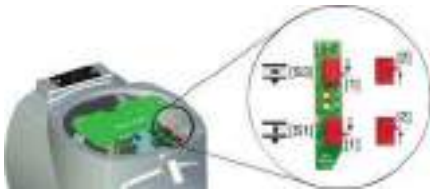

[S1] DIP switch for end position CLOSED
[S3] DIP switch for end position OPEN
[1] Position [1] = limit seating
[2] Position [2] = torque seating

10.3. Push-to-run operation or self-retaining: set

Push-to-run operation or self-retaining is set via a DIP switch on the logic board.

Push-to-run operation Actuator only runs in direction OPEN or CLOSE while an operation command is being received. The actuator stops if the operation command is cancelled.

Self-retaining After receiving an operation command, the actuator continues to run in direction OPEN or CLOSE, even if the operation command is cancelled (self-retaining). The actuator is either stopped by the STOP command or if an end position or intermediate position has been reached.

→ Set push-to-run operation or self-retaining via DIP switch [S2].

Figure 34: DIP switch on logic board

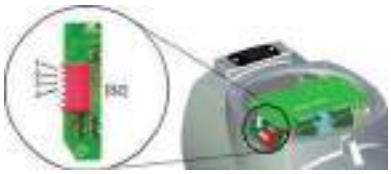

[S2] 6-way DIP, switches [1 – 4]:
1 for operation commands CLOSE from remote
2 for operation commands OPEN from remote
3 for operation commands CLOSE via push button at local controls
4 for operation commands OPEN via push button at local controls

↳ Switch in lower position (position ON): Self-retaining

↳ Switch in upper position (position OFF): Push-to-run operation

Information If the controls are equipped with a positioner, switches 1 and 2 (operation commands from remote) must be in position OFF (push-to-run operation).

10.4. Running indication (blinker transmitter): activate/deactivate

— (Option) —

If the actuator is equipped with a blinker transmitter (wiring diagram designation: S5), indication lights (OPEN/CLOSE) on the local controls can be used as running indication. If the running indication is active, the respective indication light blinks during actuator operation.

The running indication is activated/deactivated via a DIP switch on the logic board.

→ Set running indication (blinker) via DIP switch [S2].

Figure 35: DIP switch on logic board

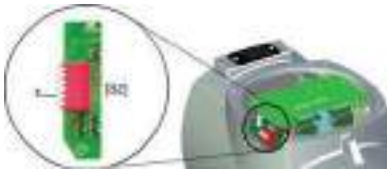

[S2] 6-way DIP, switch 5

↳ Switch 5 in lower position (position ON): Running indication is deactivated.

↳ Switch 5 in upper position (position OFF): Running indication is activated.

10.5. Torque fault in collective fault signal: activate/deactivate

The torque fault signal is activated/deactivated via a DIP switch on the logic board.

→ Activate/deactivate signal via DIP switch [S2].

Figure 36: DIP switch on logic board

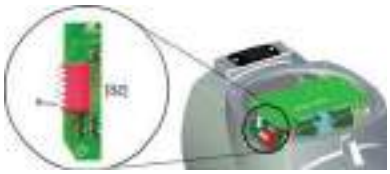

[S2] 6-way DIP, switch 6

↳ Switch 6 in lower position (position ON): The signal "Torque fault in collective fault signal" is activated.

↳ Switch 6 in upper position (position OFF): The signal "Torque fault in collective fault signal" is deactivated.

10.6. Positioner

— (Option) —

→ Prior to positioner setting, set limit and torque switching as well as potentiometer or electronic position transmitter.

10.6.1. Input ranges (signal type) for setpoint and actual value

The input range (signal type) for setpoint E1 and actual value E2 is set in the factory and marked with a label on the cover plate of the positioner.

The type of signal can be modified at a later date exclusively for versions with setpoint E1 ≠ 0/4 – 20 mA and split-range version. For these versions, the positioner board is equipped with an additional contact.

Figure 37: Version with additional switch on the positioner board

[5] Label indicating the set input ranges
[S1-7] 5-contact DIP switch for setting
DIP1 Actual value E2 (current or voltage signal)
DIP3 Setpoint E1 (current or voltage signal)
DIP5 Setpoint E1 (double signal range e.g. for split range)

Table 11: Input range setting for setpoint E1

Setpoint E1	[S1–7]
	DIP 3 and 5
0/4 – 20 mA	
0 – 5 V	
0 – 10 V	

Table 12: Input range setting for actual value E2

Actual value E2	[S1–7]
	DIP 1
0/4 – 20 mA[1)]	
0 – 5 V[2)]	

1) for internal feedback of electronic position transmitter RWG
2) for internal feedback of precision potentiometer 5 kΩ

Information When changing the setting, a new label [5] indicating the set signal type must be provided. Furthermore, the wiring diagram indicated on the name plate of the actuator controls also changes.

10.6.2. Behaviour on loss of signal (actuator reaction)

In case of a loss of signal of setpoint E1 or actual value E2, the reaction of the actuator can be programmed via switch [S2-7]. The complete selection range, however, is only available for signals 4 – 20 mA.

The following reactions are possible:

Fail as is: Actuator stops immediately and remains in this position.

Fail close: Actuator moves the valve to end position CLOSED.

Fail open: Actuator moves the valve to end position OPEN.

Figure 38: DIP switch [S2-7] on positioner board

DIP1 = ON, actual value E2 is monitored
DIP2 = ON, setpoint E1 is monitored

Table 13: Recommended settings

Behaviour on loss of signal of	Signal type		[S2–7]
E1 and/or E2	Setpoint E1	Actual value E2	DIP 1 2 3 4
Fail as is	4 – 20 mA	4 – 20 mA	
Fail close			
Fail open			

Table 14: Further possible settings

Behaviour on loss of signal of		Signal type[1)]		[S2–7]
E1	E2	Setpoint E1	Actual value E2	DIP 1 2 3 4
Fail as is	Fail open	4 – 20 mA	0 – 5 V	
Fail close	Fail open	4 – 20 mA	0 – 5 V	
		0 – 20 mA	4 – 20 mA	
		0 – 20 mA 0 – 5 V 0 – 10 V	0 – 20 mA 0 – 5 V	
	Fail close	0 – 20 mA 0 – 5 V	4 – 20 mA	
	Fail as is	0 – 20 mA 0 – 10 V	4 – 20 mA	
Fail open		4 – 20 mA	0 – 20 mA 0 – 5 V	

1) in case of a signal loss, a misinterpretation might be made for **0** – 20 mA, **0** – 5 V or **0** – 10 V, due to the fact that E1 or E2 could take the value 0 mA even without loss of signal (end position CLOSED = 0 mA or 0 V).

10.6.3. Adjustment in end positions

The setting described below applies to the standard positioner version, i.e. maximum setpoint E1 (20 mA) triggers a travel to end position OPEN, minimum setpoint (0/4 mA) triggers a travel to end position CLOSED.

Figure 39: Electronic positioner board

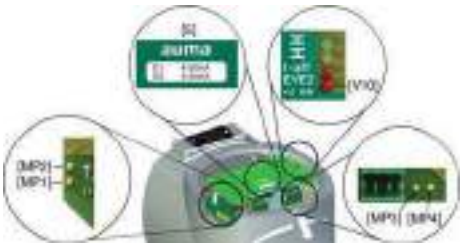

[MP1] Measuring point (–) for actual value E2
[MP2] Measuring point (+) for actual value E2
[MP3] Measuring point (+) for setpoint E1
[MP4] Measuring point (–) for setpoint E1
[5] Label with signal indication
[V10] Red LED: E1/E2 <4 mA

End position CLOSED

1. Set selector switch to position **Local control** (LOCAL).
2. Move valve to end position CLOSED.
3. Connect lower setpoint to customer connection XK (terminals 2/3). The lower setpoint (0 V, 0 mA or 4 mA) is indicated on the label [5].
4. If the red LED [V10] **E1/E2 <4 mA** is illuminated:
   4.1 Verify polarity of setpoint E1.
   4.2 Check whether external load is connected to customer connection XK (terminals 23/24) (observe max. load R_B), or
   4.3 Connect terminals 23/24 across customer connection XK (terminals 23/24).
5. Measure setpoint E1: Connect measuring device for 0 – 5 V to measuring points **[MP3/MP4]**.

➥ For a setpoint E1 of 0 V or 0 mA, the voltmeter shows 0 V.

➥ For a setpoint E1 of 4 mA, the voltmeter shows 1 V.

6. If measured value is not correct: Correct setpoint E1.
7. Measure actual value E2: Connect measuring device for 0 – 5 V to measuring points **[MP1/MP2]**.

➥ For an actual value E2 of 0 mA, the voltmeter shows 0 V.

➥ For an actual value E2 of 4 mA, the voltmeter shows 1 V.

8. If measured value is not correct: Re-set potentiometer or electronic position transmitter and perform adjustment once again, starting from step 1.

9. Adjust positioner using potentiometer **0** [P3].
   9.1 If both LEDs are OFF or the green LED [V28] is illuminated: Turn potentiometer **0** [P3] slightly clockwise until the yellow LED [V27] is illuminated.
   9.2 If the yellow LED [V27] is illuminated: Turn potentiometer **0** [P3] counterclockwise until the yellow LED [V27] goes out. Then turn potentiometer **0** [P3] slightly clockwise until the yellow LED [V27] is illuminated again.

Figure 40: Electronic positioner board

[P3] Potentiometer 0
[P4] Potentiometer max
[V27] Yellow LED: End position CLOSED reached
[V28] Green LED: End position OPEN reached

➥ The setting is correct if the yellow LED [V27] is switched on when reaching end position CLOSED.

End position OPEN

10. Move valve to end position OPEN.
11. Measure actual value E2 (measuring points **[MP1/MP2]**):

➥ For an actual value E2 of 20 mA, the voltmeter shows 5 V.

12. If measured value is not correct: Re-set potentiometer or electronic position transmitter and perform adjustment once again, starting from step 1.
13. Set maximum setpoint E1 (5 V or 20 mA, refer to label [5]).
14. Measure setpoint E1 (measuring points **[MP3/MP4]**):

➥ For a setpoint E1 of 5 V or 20 mA, the voltmeter shows 5 V.

15. If measured value is not correct: Verify setpoint E1.
16. Adjust positioner using potentiometer **max** [P4].
   16.1 If both LEDs are OFF or the yellow LED [V27] is illuminated: Turn potentiometer **max** [P4] slightly counterclockwise until the green LED [V28] is illuminated.
   16.2 If the green LED [V28] is illuminated: Turn potentiometer **max** [P4] clockwise until the green LED [V28] goes out. Then turn potentiometer **0** [P3] slightly counterclockwise until the green LED [V28] is illuminated again.
   ➥ The setting is correct if the green LED [V28] is switched on when reaching end position OPEN.

10.6.4. Sensitivity setting

NOTICE

Unnecessary wear at valve and actuator caused by an excessive number of starts (sensitivity)!

→ Set maximum dead band acceptable for the process.
→ Observe maximum number of actuator starts (refer to technical data sheet for modulating actuators).

Dead band

The dead band determines the sensitivity between switch-on point and switch-off point. The smaller the dead band, the higher the sensitivity of the positioner.

Default value: 2.5 %

Setting range: 0.5 % to 2.5 % (of the maximum setpoint E1)

Dead time

The dead time prevents the operation to a new setpoint within a pre-determined time (0.5 to 10 seconds). The number of starts can be reduced by setting the dead time to a sufficiently high value.

Figure 41: Sensitivity setting

[P7] Potentiometer **sens** (fine tuning)
[P9] Potentiometer Δ **E** (dead band)
[P10] Potentiometer **t-off** (dead time)

Dead band setting

1. Set selector switch to position **Remote control** (REMOTE).
2. Connect setpoint E1 to customer connection XK (terminals 2/3).
3. Set dead band using potentiometer Δ **E** [P9]:
   → Reduce dead band (increase sensitivity): Turn potentiometer counterclockwise.
   → Increase dead band (reduce sensitivity): Turn potentiometer clockwise.

Fine tuning

Information: Fine tuning is only useful for output speeds <16 rpm. For 1-phase AC motors, fine tuning is not possible.

4. Reduce dead band further by up to 0.25 % (increase sensitivity): Turn potentiometer **sens** [P7] counterclockwise.

Dead time setting

5. Set dead time using potentiometer **t-off** [P10]:
   → Reduce dead time: Turn potentiometer **t-off** [P10] counterclockwise.
   → Increase dead time: Turn potentiometer **t-off** [P10] clockwise.

10.7. EMERGENCY command (EMERGENCY - OPEN/EMERGENCY - CLOSE)

— (Option) —

The EMERGENCY input (refer to wiring diagram) has to be connected to the control voltage using an NC contact (closed circuit principle). In the event of an EMERGENCY command (removal of the signal = NC contact is operated), the actuator runs to the preset end position:

- EMERGENCY - CLOSE input: Actuator runs to end position CLOSED.
- EMERGENCY - OPEN input: Actuator runs to end position OPEN.

The EMERGENCY command is effective in all three selector switch positions (LOCAL, OFF, REMOTE).

CAUTION

The actuator can immediately start when switched on!

Risk of personal injuries or damage to the valve.

→ Ensure that EMERGENCY signal is present when switching on.
→ If the actuator starts to run unexpectedly: Immediately press push button **Stop**.

Disable EMERGENCY command

Figure 42: Interface board for available option EMERGENCY - OPEN/EMERGENCY - CLOSE

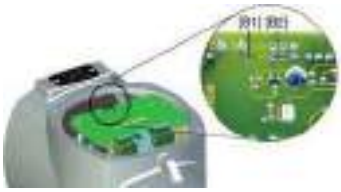

[B1] Link available: EMERGENCY - CLOSE
[B2] Link available: EMERGENCY - OPEN

1. Remove face plate.
2. Disconnect links [B1] or [B2].

10.8. Controls: close

NOTICE

Danger of corrosion due to damage to paint finish!

→ Touch up damage to paint finish after work on the device.

1. Clean sealing faces of housing and cover.
2. Check whether O-ring [3] is in good condition, replace if damaged.
3. Apply a thin film of non-acidic grease (e.g. petroleum jelly) to the O-ring and insert it correctly.

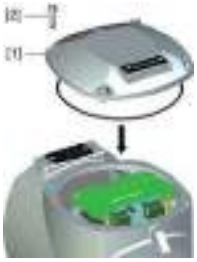

4. Place cover [1] on switch compartment.
5. Fasten screws [2] evenly crosswise.

11. Corrective action

11.1. Faults during commissioning

Table 15: Faults during commissioning

Fault	Description/cause	Remedy
Mechanical position indicator cannot be set.	Reduction gearing is not suitable for turns/stroke of the actuator.	Exchange reduction gearing.
In spite of correct setting of limit switching, actuator operated into the valve end position.	The overrun was not considered when setting the limit switching. The overrun is generated by the inertia of both the actuator and the valve and the delay time of the controls.	• Determine overrun: Overrun = travel covered from switching off until complete standstill. • Set limit switching again considering the overrun (turn handwheel back by the amount of the overrun).
No value can be measured at measuring points of the RWG.	Current loop across RWG is open. (Position feedback 0/4 – 20 mA is only possible if the current loop is closed across the RWG.)	• Connect link across RWG to XK (terminals 23/24) • Connect external load to XK, e.g. remote indication. • Observe maximum load R_B.
Measuring range 0/4 – 20 mA or maximum value 20 mA at position transmitter cannot be set or supplies an incorrect value.	Reduction gearing is not suitable for turns/stroke of the actuator.	Exchange reduction gearing.
The measuring range 0/4 – 20 mA at EWG position transmitter cannot be set.	The LED on the EWG either flashes in setting mode a) single flash or b) triple flash: a) EWG is not calibrated. b) Magnet positions of EWG are not aligned.	Call AUMA service.
Limit and/or torque switches do not trip.	Switch is defective or switch setting is incorrect.	• Check setting, if required, reset end positions. • Refer to <Check switches> and replace the switches if required.

Switch check

The red test buttons [1] and [2] are used for manual operation of the switches:

1. Turn test button [1] in direction of the TSC arrow: Torque switch CLOSED trips. The red indication light (fault) on the local controls is illuminated.
2. Press push button OPEN to reset the fault (indication light) by operating the device in the opposite direction.
3. Turn test button [2] in direction of the TSO arrow: Torque switch OPEN trips.
4. Press push button CLOSE to reset the fault (indication light) by operating the device in the opposite direction.

If the actuator is equipped with a DUO limit switching (option), the intermediate position switches (LSA and LSB) will be operated at the same time as the torque switches.

1. Turn test button [1] in direction of the LSC arrow: Limit switch CLOSED trips.
2. Turn test button [2] in direction of the LSO arrow: Limit switch OPEN trips.

11.2. Fuses

11.2.1. Fuses within the actuator controls

After removal of local controls, the fuses can be accessed.

Hazardous voltage!

Risk of electric shock.

→ Disconnect device from the mains before opening.

Figure 43: Access to fuses

[1] Local controls
[2] Signal and control board
[3] Power supply unit

F1/F2 Primary fuses on power supply unit

G fuses	F1/F2	AUMA Art. no.:
Size	6.3 x 32 mm	
Power supply≤ 500 V	1 A T; 500 V	K002.277
Power supply > 500 V	2 A FF; 690 V	K002.665

F3 Internal 24 V DC supply

G fuse according to IEC 60127-2/III	F3	AUMA Art.no.:
Size	5 x 20 mm	
Voltage output (power supply unit) = 24 V	500 mA T; 250 V	K001.183
Voltage output (power supply unit) = 115 V	500 mA T; 250 V	K001.183

F4 Internal 24 V AC supply (115 V AC) for:

- Heater, switch compartment, reversing contactors control
- PTC tripping device (24 V AC only)
- for 115 V AC also control inputs OPEN - STOP - CLOSE

G fuse according to IEC 60127-2/III	F4	AUMA Art.no.:
Size	5 x 20 mm	
Voltage output (power supply unit) = 24 V	1.0 A T; 250 V 1.6 A T; 250 V	K004.831 K003.131
Voltage output (power supply unit) = 115 V	0.4 A T; 250 V	K003.021

Information Only replace fuses with fuses of the same type and value.

→ After replacing the fuses, screw local controls back on again.

Cable damage due to twisting or pinching!

Risk of functional failures.

→ Turn local controls by a maximum of 180°.

→ Carefully assemble local controls to avoid pinching the cables.

11.2.2. Motor protection (thermal monitoring)

In order to protect against overheating and impermissibly high surface temperatures at the actuator, PTC thermistors or thermoswitches are embedded in the motor winding. The thermoswitch is tripped as soon as the max. permissible winding temperature has been reached.

The actuator is stopped and the "collective fault" indication light (option) on the local controls is illuminated.

The motor has to cool down before the operation can be resumed.

Version with thermoswitch (standard)

The actuator can be controlled again once the motor has cooled down ("collective fault" indication light goes out).

Version with thermoswitch and additional thermal overload relay within the controls (option)

The operation may only be resumed once the fault signal ("collective fault" indication light) has been reset. The fault signal is reset via the overload relay integrated in the actuator controls. Therefore the controls have to be opened at the cover and the relay held down. The relay is located on the contactors.

Version with PTC thermistor (option)

The operation may only be resumed once the fault signal ("collective fault" indication light) has been reset. The fault signal is reset via selector switch position **Reset** of the local controls.

Figure 44: Selector switch on local controls

12. Servicing and maintenance

Damage caused by inappropriate maintenance!

→ Servicing and maintenance must be carried out exclusively by suitably qualified personnel having been authorised by the end user or the contractor of the plant. Therefore, we recommend contacting our service.

→ Only perform servicing and maintenance tasks when the device is switched off.

AUMA Service & Support

AUMA offer extensive service such as servicing and maintenance as well as customer product training. For the relevant contact addresses, please refer to <Addresses> in this document or to the Internet (www.auma.com).

12.1. Preventive measures for servicing and safe operation

The following measures are required to ensure safe device operation:

6 months after commissioning and then every year

- Carry out visual inspection:
  Cable entries, cable glands, blanking plugs, etc. have to be checked for correct tightness and sealing.
  Respect torques according to manufacturer's details.
- Check fastening screws between actuator and gearbox/valve for tightness. If required, fasten screws while applying the tightening torques as indicated in chapter <Assembly>.
- When rarely operated: Perform test run.
- For devices with output drive A: Press in Lithium soap EP multi-purpose grease on mineral oil base at the grease nipple with a grease gun.
- Lubrication of the valve stem must be done separately.

Figure 45: Output drive type A

[1] Output drive type A
[2] Grease nipple

Table 16: Grease quantities for bearing of output drive type A

Output drive	A 07.2	A 10.2	A 14.2	A 16.2
Quantity [g] 1)	1.5	2	3	5

1) For grease at density r = 0.9 kg/dm³

For enclosure protection IP68

After continuous immersion:

- Check actuator.
- In case of ingress of water, locate leaks and repair, dry device correctly and check for proper function.

12.2. Maintenance

Lubrication

- In the factory, the gear housing is filled with grease.

- Grease change is performed during maintenance
  - Generally after 4 to 6 years for modulating duty.
  - Generally after 6 to 8 years if operated frequently (open-close duty).
  - Generally after 10 to 12 years if operated rarely (open-close duty).
- We recommend exchanging the seals when changing the grease.
- No additional lubrication of the gear housing is required during operation.

12.3. Disposal and recycling

Our devices have a long lifetime. However, they have to be replaced at one point in time. The devices have a modular design and may, therefore, easily be separated and sorted according to materials used, i.e.:

- electronic scrap
- various metals
- plastics
- greases and oils

The following generally applies:

- Greases and oils are hazardous to water and must not be released into the environment.
- Arrange for controlled waste disposal of the disassembled material or for separate recycling according to materials.
- Observe the national regulations for waste disposal.

13. Technical data

Information The following technical data includes standard and optional features. For detailed information on the customer-specific version, refer to the order-related data sheet. The technical data sheet can be downloaded from the Internet at **www.auma.com** in both German and English (please state the order number).

13.1. Technical data Multi-turn actuators

Features and functions		
Type of duty	Standard:	Short-time duty S2 - 15 min (multi-turn actuators for open-close duty) Intermittent duty S4 - 25 % (multi-turn actuators for modulating duty)
	Option:	Short-time duty S2 - 30 min (multi-turn actuators for open-close duty) Intermittent duty S4 - 50 % (multi-turn actuators for modulating duty) Intermittent duty S5 - 25 % (multi-turn actuators for modulating duty) S5 - 25 % only in combination with insulation class H
	For nominal voltage and 40 °C ambient temperature and at average load with 35 % of the max. torque	
Motors	Standard:	3-ph AC asynchronous motor, type IM B9 according to IEC 60034
	Option:	1-phase AC motor, type IM B9 according to IEC 60034 DC shunt motor, type IM B14 according to IEC 60034 DC compound motor, type IM B14 according to IEC 60034
Mains voltage, mains frequency	Refer to motor name plate Permissible variation of mains voltage: ±10 % Permissible variation of mains frequency: ±5 % (for 3-phase AC and 1-phase AC current)	
Overvoltage category	Category III according to IEC 60364-4-443	
Insulation class	Standard:	F, tropicalized
	Option:	H, tropicalized
Motor protection	Standard:	3-phase and 1-phase AC motors: Thermoswitches (NC) DC motors: Without
	Option:	PTC thermistors (according to DIN 44082)
Self-locking	Self-locking: Output speeds up to 90 rpm (50 Hz), 108 rpm (60 Hz) NOT self-locking: Output speeds up to 125 rpm (50 Hz), 150 rpm (60 Hz) Multi-turn actuators are self-locking, if the valve position cannot be changed from standstill while torque acts upon the output drive.	
Motor heater (option)	Voltages:	110 – 120 V AC, 220 – 240 V AC or 400 V AC (externally supplied)
	Power depending on the size 12.5 – 25 W	
Manual operation	Manual drive for setting and emergency operation, handwheel does not rotate during electrical operation.	
	Option:	Handwheel lockable Handwheel stem extension Power tool for emergency operation with square 30 mm or 50 mm
Indication for manual operation (option)	Indication whether manual operation is active/not active via single switch (1 change-over contact)	
Valve attachment	Standard:	B1 according to EN ISO 5210
	Option:	A, B2, B3, B4 according to EN ISO 5210 A, B, D, E according to DIN 3210 C according to DIN 3338
	Special output drive types: AF, AK, AG, B3D, ED, DD, IB1, IB3 A prepared for permanent lubrication of stem	

Electromechanical control unit		
Limit switching	Counter gear mechanism for end positions OPEN and CLOSED Turns per stroke: 2 to 500 (standard) or 2 to 5,000 (option)	
	Standard:	Single switches (1 NC and 1 NO) for each end position, not galvanically isolated
	Options:	Tandem switches (2 NC and 2 NO) for each end position, switches galvanically isolated Triple switches (3 NC and 3 NO) for each end position, switches galvanically isolated Intermediate position switch (DUO limit switching), adjustable for any position
Torque switching	Torque switching adjustable for directions OPEN and CLOSE	
	Standard:	Single switches (1 NC and 1 NO) for each direction, not galvanically isolated
	Options:	Tandem switches (2 NC and 2 NO) for each direction, switches galvanically isolated
Position feedback signal, analogue (option)	Potentiometer or 0/4 – 20 mA (EWG/RWG)	
Mechanical position indicator (option)	Continuous indication, adjustable indicator disc with symbols OPEN and CLOSED	
Running indication	Blinker transmitter (option for modulating actuators)	
Heater in switch compartment	Standard:	Self-regulating PTC heater, 5 – 20 W, 110 – 250 V AC/DC
	Options:	24 – 48 V AC/DC or 380 – 400 V AC
	A resistance type heater of 5 W, 24 V AC is installed in the actuator in combination with AM or AC actuator controls.	

Technical data for limit and torque switches	
Mechanical lifetime	2 x 10^6 starts
Silver plated contacts:	
U min.	24 V AC/DC
U max.	250 V AC/DC
I min.	20 mA
I max. AC current	5 A at 250 V (resistive load) 3 A at 250 V (inductive load, cos phi = 0.6)
I max. DC current	0.4 A at 250 V (resistive load) 0.03 A at 250 V (inductive load, L/R = 3 µs) 7 A at 30 V (resistive load) 5 A at 30 V (inductive load, L/R = 3 µs)
Gold plated contacts	
U min.	5 V
U max.	30 V
I min.	4 mA
I max.	400 mA

Technical data for blinker transmitter	
Mechanical lifetime	10^7 starts
Silver plated contacts:	
U min.	10 V AC/DC
U max.	250 V AC/DC
I max. AC current	3 A at 250 V (resistive load) 2 A at 250 V (inductive load, cos phi ≈ 0.8)
I max. DC current	0.25 A at 250 V (resistive load)

Technical data for handwheel activation switches	
Mechanical lifetime	10^6 starts
Silver plated contacts:	
U min.	12 V DC
U max.	250 V AC
I max. AC current	3 A at 250 V (inductive load, cos phi = 0.8)
I max. DC current	3 A at 12 V (resistive load)

Service conditions		
Use	Indoor and outdoor use permissible	
Mounting position	Any position	
Installation altitude	≤ 2 000 m above sea level > 2,000 m above sea level, please contact AUMA	
Ambient temperature	Standard:	–40 °C to +80 °C –40 °C to +60 °C (multi-turn actuators for modulating duty with DC motors)
	Options:	–50 °C to +60 °C (1-phase AC motors) –60 °C to +60 °C (3-phase AC motors) 0 °C to +120 °C (multi-turn actuators for modulating duty with 3-phase AC motors)
	For exact version, refer to actuator name plate.	
Enclosure protection according to EN 60529	Standard:	IP68 For special motors differing enclosure protection: refer to name plate.
	Option:	DS Terminal compartment additionally sealed against interior (double sealed)
	According to AUMA definition, enclosure protection IP68 meets the following requirements: • Depth of water: maximum 8 m head of water • Duration of continuous immersion in water: max. 96 hours • Up to 10 operations during flooding. Modulating duty is not possible during continuous immersion.	
	For actual version, refer to actuator name plate.	
Pollution degree	Pollution degree 4 (when closed) according to EN 50178	
Vibration resistance according to IEC 60068-2-6	2 g, from 10 to 200 Hz Resistant to vibration during start-up or for failures of the plant. However, a fatigue strength may not be derived from this. Valid for multi-turn actuators in version AUMA NORM (with AUMA plug/socket connector, without actuator controls). Not valid in combination with gearboxes.	
Corrosion protection	Standard:	KS: Suitable for installation in industrial units, in water or power plants with a low pollutant concentration as well as for installation in occasionally or permanently aggressive atmosphere with a moderate pollutant concentration (e.g. wastewater treatments plants, chemical industry)
	Option:	KX: Suitable for installation in extremely aggressive atmospheres with high humidity and high pollutant concentration
		KX-G : same as KX, however aluminium-free version (outer parts)
Finish coating	Powder coating Two-component iron-mica combination	
Colour	Standard:	AUMA silver-grey (similar to RAL 7037)
	Option:	Other colours are possible on request.
Lifetime	AUMA multi-turn actuators meet or exceed the lifetime requirements of EN 15714-2. For further details, please contact AUMA	

Further information	
EU Directives	Electromagnetic Compatibility (EMC): (2004/108/EC) Low Voltage Directive: (2006/95/EC) Machinery Directive: (2006/42/EC)

13.2. Technical data Actuator controls

Features and functions		
Mains voltage, mains frequency	Refer to name plates at the controls and the motor Permissible variation of the mains voltage: ±10 % Further permissible fluctuations of mains voltage and frequency (option): (–20 %/+15 %), (–20 %/+10 %), (–30 %/+30 %), , (–30 %/+10 %) Permissible variation of the mains frequency: ±5 % Current consumption of controls depending on mains voltage: 100 to 120 V AC = max. 575 mA 208 to 240 V AC = max. 275 mA 380 to 690 V AC = max. 160 mA	
External supply of the electronics (option)	24 V DC +20 % / –15 % Current consumption: Basic version approx. 200 mA, with options up to 500 mA	
Overvoltage category	Category III according to IEC 60364-4-443	
Rated power	The controls are conceived for the rated motor power, refer to motor name plate	
Switchgear	Standard:	Reversing contactors (mechanically and electrically interlocked) for AUMA power classes A1/A2
	Options:	Reversing contactors (mechanically and electrically interlocked) for AUMA power classes A1/A2 with additional contacts, 1 NC + 1 NO each
		Reversing contactors (mechanically and electrically interlocked) for AUMA power class A3
		Thyristor unit for mains voltage up to 600 V AC (recommended for modulating actuators) for AUMA power classes B1, B2 and B3
	Reversing contactors are designed for a lifetime of 2 million starts. For applications requiring a high number of starts, we recommend using thyristor units. For the assignment of AUMA power classes, refer to the Electric data pertaining to the actuator.	
Control	Standard:	Control inputs 24 V DC, OPEN - STOP - CLOSE (via opto-isolator, one common), current consumption: approx. 10 mA per input Respect min. pulse duration for modulating actuators
	Option:	Control inputs 115 V AC, OPEN - STOP - CLOSE - EMERGENCY (via opto-isolator, one common), current consumption: approx. 15 mA per input
Status signals	Standard:	5 output contacts with gold-plated contacts: • 4 potential-free NO contacts with one common, max. 250 V AC, 0.5 A (resistive load) - Default configuration: End position CLOSED, end position OPEN, selector switch REMOTE, selector switch LOCAL • 1 potential-free change-over contact, max. 250 V AC, 0.5 A (resistive load) - Default configuration: Collective fault signal (torque fault, phase failure, motor protection tripped)
	Options:	• Signals in combination with positioner: - End position OPEN, end position CLOSED (requires tandem switch within actuator), selector switch REMOTE, selector switch REMOTE, selector switch LOCAL via 2nd level selector switch • 1 potential-free change-over contact, max. 250 V AC, 0.5 A (resistive load) - Default configuration: Collective fault signal (torque fault, phase failure, motor protection tripped)
Voltage output	Standard:	Auxiliary voltage 24 V DC ±5 %, max. 50 mA for supply of control inputs, galvanically isolated from internal voltage supply
	Option:	115 V AC ±10 %, max. 30 mA for supply of the control inputs.[1], galvanically isolated from internal voltage supply
Local controls	Standard:	Selector switch LOCAL - OFF - REMOTE (lockable in all three positions)
		Push buttons OPEN, STOP, CLOSE
		3 indication lights: End position CLOSED (yellow), collective fault signal (red), end position OPEN (green)
	Options:	Special colours for the 3 indication lights
		Protection cover, lockable

Features and functions		
Functions	Standard:	Selectable type of seating, limit or torque seating for end position OPEN and end position CLOSED
		Overload protection against excessive torques over the whole travel
		Excessive torque (torque fault) can be excluded from collective fault signal.
		Phase failure monitoring with automatic phase correction
		Push-to-run operation or self-retaining in REMOTE
		Push-to-run operation or self-retaining in LOCAL
		Blinker signal from actuator (option) for running indication via indication lights of local controls can be activated/deactivated.
	Options:	Positioner (requires position transmitter in actuator) • Position setpoint via analogue input E1 = 0/4 – 20 mA • Galvanic isolation for position setpoint (0/4 – 20 mA) and position feedback (0/4 – 20 mA) • Adjustable behaviour on loss of signal • Adjustable sensitivity (dead zone and dead time)
		Positioner for Split Range operation (requires position transmitter in actuator)
Motor protection evaluation	Standard:	Monitoring the motor temperature in combination with thermoswitches within actuator motor
	Options:	Additional thermal overload relay in the controls in combination with thermoswitches within the actuator
		PTC tripping device in combination with PTC thermistors within actuator motor
Electrical connection	Standard:	AUMA plug/socket connector with screw-type connection
	Options:	Terminals or crimp connection
		Gold-plated control plug (sockets and plugs)
Threads for cable entries	Standard:	Metric threads
	Options:	Pg-threads, NPT-threads, G-threads
Wiring diagram	Refer to name plate	

1) Not possible in combination with PTC tripping device

Service conditions		
Use	Indoor and outdoor use permissible	
Mounting position	Any position	
Installation altitude	≤ 2 000 m above sea level > 2,000 m above sea level, please contact AUMA	
Ambient temperature	Standard:	–40 °C to +70 °C
	Options:	-60 °C to +60 °C, extreme low temperature version incl. heating system
		Low temperature versions incl. heating system for connection to external power supply 230 V AC or 115 V AC.
	For actual version, refer to actuator controls name plate.	
Enclosure protection according to EN 60529	Standard:	IP68 with AUMA 3-phase AC motor/1-phase AC motor For special motors differing enclosure protection: refer to name plate.
	Option:	DS Terminal compartment additionally sealed against interior (double sealed)
	According to AUMA definition, enclosure protection IP68 meets the following requirements: • Depth of water: maximum 8 m head of water • Duration of continuous immersion in water: Max. 96 hours • Up to 10 operations during continuous immersion Modulating duty is not possible during continuous immersion.	
	For actual version, refer to actuator controls name plate.	
Pollution degree	Pollution degree 4 (when closed) according to EN 50178	
Vibration resistance according to IEC 60068-2-6	2 g, from 10 to 200 Hz Resistant to vibration during start-up or for failures of the plant. However, a fatigue strength may not be derived from this. Valid for multi-turn actuators in version AUMA NORM (with AUMA plug/socket connector, without actuator controls). Not valid in combination with gearboxes.	

Service conditions		
Corrosion protection	Standard:	KS: Suitable for installation in industrial units, in water or power plants with a low pollutant concentration as well as for installation in occasionally or permanently aggressive atmosphere with a moderate pollutant concentration (e.g. wastewater treatments plants, chemical industry)
	Option:	KX: Suitable for installation in extremely aggressive atmospheres with high humidity and high pollutant concentration
Finish coating	Powder coating Two-component iron-mica combination	
Colour	Standard:	AUMA silver-grey (similar to RAL 7037)
	Option:	Other colours are possible on request.

Wall bracket	AM mounted separately from the actuator, including plug/socket connector. Connecting cable on request. Recommended for high ambient temperatures, difficult access, or in case of heavy vibration during service. Cable length between actuator and AM max. 100 m. Not suitable for version with potentiometer in the actuator. Instead of the potentiometer, the actuator has to be provided with EWG.

Further information	
Weight	Approx. 7 kg (with AUMA plug/socket connector)
EU Directives	Electromagnetic Compatibility (EMC): (2004/108/EC) Low Voltage Directive: (2006/95/EC) Machinery Directive: (2006/42/EC)

14. Spare parts

14.1. Multi-turn actuators SA 07.2 – SA 16.2/SAR 07.2 – SAR 16.2

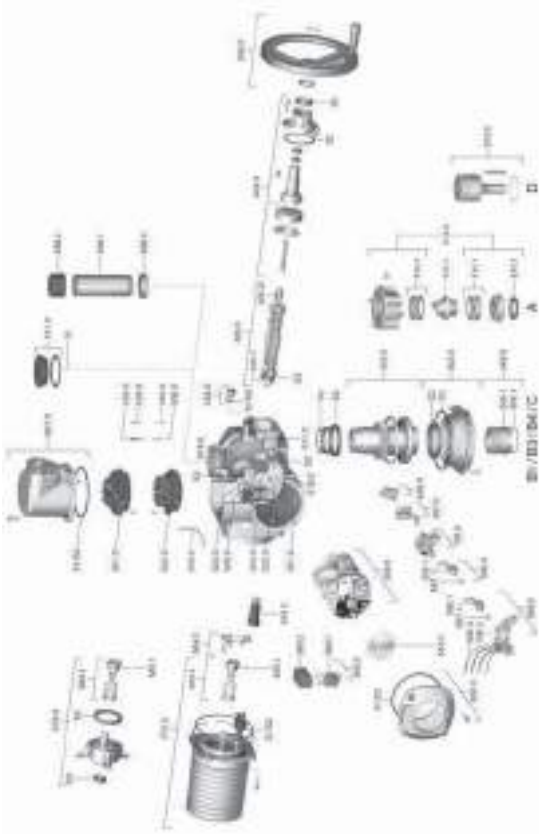

Information: Please state device type and our order number (see name plate) when ordering spare parts. Only original AUMA spare parts should be used. Failure to use original spare parts voids the warranty and exempts AUMA from any liability. Delivered spare parts may slightly vary from the representation in these instructions.

Ref. no.	Designation	Type	Ref. no.	Designation	Type
001.0	Housing	Sub-assembly	539.0	Screw plug	Sub-assembly
002.0	Bearing flange	Sub-assembly	542.0	Handwheel with ball handle	Sub-assembly
003.0	Hollow shaft	Sub-assembly	549.0	Output drive B1/B3/B4/C	Sub-assembly
005.0	Drive shaft	Sub-assembly	549.1	Output drive sleeve B1/B3/B4/C	
005.1	Motor coupling		553.0	Mechanical position indicator	Sub-assembly
005.3	Manual drive coupling		554.0	Socket carrier for motor plug/ socket connector with cable harness	Sub-assembly
009.0	Planetary gear for manual drive	Sub-assembly	556.0	Potentiometer for position transmitter	Sub-assembly
017.0	Torque lever	Sub-assembly	556.1	Potentiometer without slip clutch	Sub-assembly
018.0	Gear segment		557.0	Heater	Sub-assembly
019.0	Crown wheel		558.0	Blinker transmitter including pins at wires (without impulse disc and insulation plate)	Sub-assembly
022.0	Drive pinion II for torque switching	Sub-assembly	559.0-1	Control unit with torque switching heads and switches	Sub-assembly
023.0	Output drive wheel for limit switching	Sub-assembly	559.0-2	Control unit with magnetic limit and torque transmitter (MWG) for Non- intrusive version in combination with AUMATIC integral controls	Sub-assembly
024.0	Drive wheel for limit switching	Sub-assembly	560.0-1	Switch stack for direction OPEN	Sub-assembly
025.0	Locking plate	Sub-assembly	560.0-2	Switch stack for direction CLOSE	Sub-assembly
058.0	Wire for protective earth	Sub-assembly	560.1	Switch for limit/torque switching	Sub-assembly
070.0	Motor (VD motor incl. ref. no. 079.0)	Sub-assembly	560.2	Switch case	
079.0	Planetary gear for motor drive (SA/SAR 07.2 — 16.2 for VD motor)	Sub-assembly	566.0	Position transmitter EWG/RWG	Sub-assembly
155.0	Reduction gearing	Sub-assembly	566.1	Potentiometer for RWG without slip clutch	Sub-assembly
500.0	Cover	Sub-assembly	566.2	Position transmitter board for RWG	Sub-assembly
501.0	Socket carrier (complete with sockets)	Sub-assembly	566.3	Wire harness for RWG	Sub-assembly
502.0	Pin carrier without pins	Sub-assembly	567.1	Slip clutch for potentiometer	Sub-assembly
503.0	Socket for controls	Sub-assembly	568.1	Stem protection tube (without cap)	
504.0	Socket for motor	Sub-assembly	568.2	Cap for stem protection tube	
505.0	Pin for controls	Sub-assembly	568.3	V-seal	
506.0	Pin for motor	Sub-assembly	574.1	Radial seal for output drive type A with ISO flange	
507.0	Cover for electrical connection	Sub-assembly	575.1	Stem nut A (without thread)	
511.0	Threaded plug	Sub-assembly	583.0	Motor coupling on motor shaft	Sub-assembly
514.0	Output drive form A (without stem nut)	Sub-assembly	583.1	Pin for motor coupling	
514.1	Axial needle roller bearing	Sub-assembly	584.0	Retaining spring for motor coupling	Sub-assembly
516.0	Output drive D		S1	Seal kit, small	Set
535.1	Snap ring		S2	Seal kit, large	Set

14.2. Actuator controls AUMA MATIC AM 01.1/AM 02.1

Information: Please state device type and our order number (see name plate) when ordering spare parts. Only original AUMA spare parts should be used. Failure to use original spare parts voids the warranty and exempts AUMA from any liability. Delivered spare parts may slightly vary from the representation in these instructions.

Ref. no.	Designation	Type
001.0	Housing	
002.0	Local controls	Sub-assembly
002.5	Selector switch	Sub-assembly
003.0	Signal and control board	Sub-assembly
003.1	Primary fuse F1/F2	
003.2	Fuse cover	
004.0	Carrier for contactors	
006.0	Power supply unit	Sub-assembly
006.1	Secondary fuse F3	
006.2	Secondary fuse F4	
008.0	Interface board	Sub-assembly
008.1	Interface board	
008.2	Cover plate for interface board	
009.0	Logic board	Sub-assembly
013.0	Adapter board	Sub-assembly
500.0	Cover	Sub-assembly
501.0	Socket carrier (complete with sockets)	Sub-assembly
502.0	Pin carrier without pins	Sub-assembly
503.0	Socket for controls	Sub-assembly
504.0	Socket for motor	Sub-assembly
505.0	Pin for controls	Sub-assembly
506.0	Pin for motor	Sub-assembly
507.0	Cover for electrical connection	Sub-assembly
508.0	Switchgear	Sub-assembly
509.1	Padlock	
S	Seal kit	Set

15. Certificates

15.1. Declaration of Incorporation and EC Declaration of Conformity

Original Declaration of Incorporation of Partly Completed Machinery
(EC Directive 2006/42/EC) and EC Declaration of Conformity in compliance with the
Directives on EMC and Low Voltage

Index

A
Accessories (electrical connection) 22
Accessories for assembly 16
Actual value 46
Actuator operation from remote 26
Ambient temperature 8 , 9 , 59 , 61
Analogue signals 30
Applications 5
Assembly 12

B
Behaviour on loss of signal 46
Blinker transmitter: activate/deactivate 45

C
Cable set 22
Certificates 67
Collective fault signal 28 , 30
Commissioning 5
Commissioning – controls 43
Connecting cable 22
Control 9 , 10
Control voltage 10
Corrective action 52
Corrosion protection 11 , 59 , 62
Cross sections 19
Current consumption 18

D
Data Matrix code 10
Dead band 49
Dead time 50
Declaration of Incorporation 67
Device type 9
Direction of rotation 35
Directives 5
Disposal 56
Double sealed 24
DUO limit switching 34

E
Earth connection 24
EC Declaration of Conformity 67
Electrical connection 18
Electronic position transmitter 37 , 40
EMC 18
EMERGENCY command 50
Enclosure protection 8 , 9 , 59 , 61
EWG 37

F
Fault 52
Flange size 9
Fuses 53

H
Handwheel 12
Heat-up time 31

I
Identification 8
Indication lights 28
Indications 28
Indicator disc 28 , 41
Input current 10
Input ranges 46
Input signal 10
Inspection record 9
Intermediate frame 24
Intermediate positions 34
Inverse operation (0/20 – 4 mA) 38

L
Limit seating 43
Limit switching 33 , 36
Local control 25
Local controls 25
Loss of signal 46
Low temperature version 31
Lubrication 55

M
Mains frequency 19
Mains voltage 9 , 19
Maintenance 5 , 55 , 55
Manual operation 25
Mechanical position indicator 28 , 41
Motor heater 21
Motor operation 25

N
Name plate 8 , 19

O
Operation 5 , 25
Order number 8 , 9 , 9
Output drive type A 13
Output drive types B, B1, B2, B3, B4, and E 12

P
Packaging 11
Parking frame 23
Positioner 46
Positioner adjustment 48
Positioner sensitivity 49
Position indicator 41
Position transmitter EWG 37 , 37
Position transmitter RWG 40
Potentiometer 39
Power class 9
Power class for switchgear 10
Power supply 18 , 19
Production, year 9
Protection cover 23
Protection on site 18
Protective measures 5
PTC tripping device 37
Push-to-run operation: set 44

Q
Qualification of staff 5

R
Range of application 5
Recycling 56
Remote actuator operation 26
Running indication 28 , 28
Running indication: activate/deactivate 45
RWG 40

S
Safety instructions 5
Safety instructions/warnings 5
Self-retaining: set 44
Serial number 8 , 9 , 9
Service 55
Servicing 55
Setpoint 46
Short-circuit protection 18
Signals 30
Signals (analogue) 30
Signal type 46
Size 9
Spare parts 63
Speed 8
Standards 5
Stem nut 14
Stem protection tube 16
Storage 11
Support 55
Support App 10 , 10
Switch check 52

T
Technical data 57
Technical data for switches 58
Terminal plan 18
Terminal plan for actuator 9
Test run 35
Torque fault signal: activate/deactivate 45
Torque range 8
Torque seating 43
Torque switching 32
Transport 11
Type (device type) 9
Type designation 8 , 9
Type of current 19
Type of lubricant 8
Type of seating: set 43

V
Valve stem 16

W
Wall bracket 22
Wiring diagram 9 , 18
Wiring diagram for controls 9

Y
Year of production 9

Europe

AUMA Riester GmbH & Co. KG

Plant Müllheim
DE 79373 Müllheim
Tel +49 7631 809 - 0
riester@auma.com
www.auma.com

Plant Ostfildern-Nellingen
DE 73747 Ostfildern
Tel +49 711 34803 - 0
riester@wof.auma.com

Service-Center Bayern
DE 85386 Eching
Tel +49 81 65 9017- 0
Riester@scb.auma.com

Service-Center Köln
DE 50858 Köln
Tel +49 2234 2037 - 900
Service@sck.auma.com

Service-Center Magdeburg
DE 39167 Niederndodeleben
Tel +49 39204 759 - 0
Service@scm.auma.com

AUMA-Armaturenantriebe Ges.m.b.H.
AT 2512 Tribuswinkel
Tel +43 2252 82540
office@auma.at
www.auma.at

AUMA BENELUX B.V. B. A.
BE 8800 Roeselare
Tel +32 51 24 24 80
office@auma.be
www.auma.nl

ProStream Group Ltd.
BG 1632 Sofia
Tel +359 2 9179-337
valtchev@prostream.bg
www.prostream.bg

OOO "Dunkan-Privod"
BY 220004 Minsk
Tel +375 29 6945574
belarus@auma.ru
www.zatvor.by

AUMA (Schweiz) AG
CH 8965 Berikon
Tel +41 566 400945
RettichP.ch@auma.com

AUMA Servopohony spol. s.r.o.
CZ 250 01 Brandýs n.L.-St.Boleslav
Tel +420 326 396 993
auma-s@auma.cz
www.auma.cz

GRØNBECH & SØNNER A/S
DK 2450 København SV
Tel +45 33 26 63 00
GS@g-s.dk
www.g-s.dk

IBEROPLAN S.A.
ES 28027 Madrid
Tel +34 91 3717130
iberoplan@iberoplan.com

AUMA Finland Oy
FI 02230 Espoo
Tel +358 9 5840 22
auma@auma.fi
www.auma.fi

AUMA France S.A.R.L.
FR 95157 Taverny Cedex
Tel +33 1 39327272
info@auma.fr
www.auma.fr

AUMA ACTUATORS Ltd.
GB Clevedon, North Somerset BS21 6TH
Tel +44 1275 871141
mail@auma.co.uk
www.auma.co.uk

D. G. Bellos & Co. O.E.
GR 13673 Acharnai, Athens
Tel +30 210 2409485
info@dgbellos.gr

APIS CENTAR d. o. o.
HR 10437 Bestovje
Tel +385 1 6531 485
auma@apis-centar.com
www.apis-centar.com

Fabo Kereskedelmi és Szolgáltató Kft.
HU 8800 Nagykanizsa
Tel +36 93/324-666
auma@fabo.hu
www.fabo.hu

Falkinn HF
IS 108 Reykjavik
Tel +00354 540 7000
os@falkinn.is
www.falkinn.is

AUMA ITALIANA S.r.l. a socio unico
IT 20023 Cerro Maggiore (MI)
Tel +39 0331 51351
info@auma.it
www.auma.it

AUMA BENELUX B.V.
LU Leiden (NL)
Tel +31 71 581 40 40
office@auma.nl

NB Engineering Services
MT ZBR 08 Zabbar
Tel + 356 2169 2647
nikibel@onvol.net

AUMA BENELUX B.V.
NL 2314 XT Leiden
Tel +31 71 581 40 40
office@auma.nl
www.auma.nl

SIGUM A. S.
NO 1338 Sandvika
Tel +47 67572600
post@sigum.no

AUMA Polska Sp. z o.o.
PL 41-219 Sosnowiec
Tel +48 32 783 52 00
biuro@auma.com.pl
www.auma.com.pl

AUMA-LUSA Representative Office, Lda.
PT 2730-033 Barcarena
Tel +351 211 307 100
geral@aumalusa.pt

SAUTECH
RO 011783 Bucuresti
Tel +40 372 303982
office@sautech.ro

OOO PRIWODY AUMA
RU 141402 Khimki, Moscow region
Tel +7 495 221 64 28
aumarussia@auma.ru
www.auma.ru

OOO PRIWODY AUMA
RU 125362 Moscow
Tel +7 495 787 78 21
aumarussia@auma.ru
www.auma.ru

ERICHS ARMATUR AB
SE 20039 Malmö
Tel +46 40 311550
info@erichsarmatur.se
www.erichsarmatur.se

ELSO-b, s.r.o.
SK 94901 Nitra
Tel +421 905/336-926
elsob@stonline.sk
www.elsob.sk

Auma Endüstri Kontrol Sistemleri Limited Sirketi
TR 06810 Ankara
Tel +90 312 217 32 88
info@auma.com.tr

AUMA Technology Automations Ltd
UA 02099 Kiev
Tel +38 044 586-53-03
auma-tech@aumatech.com.ua

Africa

Solution Technique Contrôle Commande
DZ Bir Mourad Rais, Algiers
Tel +213 21 56 42 09/18
stcco@wissal.dz

A.T.E.C.
EG Cairo
Tel +20 2 23599680 - 23590861
contactus@atec-eg.com

SAMIREG
MA 203000 Casablanca
Tel +212 5 22 40 09 65
samireg@menara.ma

MANZ INCORPORATED LTD.
NG Port Harcourt
Tel +234-84-462741
mail@manzincorporated.com
www.manzincorporated.com

AUMA South Africa (Pty) Ltd.
ZA 1560 Springs
Tel +27 11 3632880
aumasa@mweb.co.za

America

AUMA Argentina Rep.Office
AR Buenos Aires
Tel +54 11 4737 9026
contacto@aumaargentina.com.ar

AUMA Automação do Brazil ltda.
BR Sao Paulo
Tel +55 11 4612-3477
contato@auma-br.com

TROY-ONTOR Inc.
CA L4N 8X1 Barrie, Ontario
Tel +1 705 721-8246
troy-ontor@troy-ontor.ca

AUMA Chile Representative Office
CL 9500414 Buin
Tel +56 2 821 4108
aumachile@auma-chile.cl

Ferrostaal de Colombia Ltda.
CO Bogotá D.C.
Tel +57 1 401 1300
dorian.hernandez@ferrostaal.com
www.ferrostaal.com

Transcontinental Trading Overseas SA.
CU Ciudad Habana
Tel +53 7 208 9603 / 208 7729
tto@ttoweb.com

AUMA Región Andina & Centroamérica
EC Quito
Tel +593 2 245 4614
auma@auma-ac.com
www.auma.com

Corsusa International S.A.C.
PE Miraflores - Lima
Tel +511444-1200 / 0044 / 2321
corsusa@corsusa.com
www.corsusa.com

Control Technologies Limited
TT Marabella, Trinidad, W.I.
Tel + 1 868 658 1744/5011
www.ctltech.com

AUMA ACTUATORS INC.
US PA 15317 Canonsburg
Tel +1 724-743-AUMA (2862)
mailbox@auma-usa.com
www.auma-usa.com

Suplibarca
VE Maracaibo, Estado, Zulia
Tel +58 261 7 555 667
suplibarca@intercable.net.ve

Asia

AUMA Actuators UAE Support Office
AE 287 Abu Dhabi
Tel +971 26338688
Nagaraj.Shetty@auma.com

AUMA Actuators Middle East
BH 152 68 Salmabad
Tel +97 3 17896585
salesme@auma.com

Mikuni (B) Sdn. Bhd.
BN KA1189 Kuala Belait
Tel + 673 3331269 / 3331272
mikuni@brunet.bn

AUMA Actuators China Co., Ltd
CN 215499 Taicang
Tel +86 512 3302 6900
mailbox@auma-china.com
www.auma-china.com

PERFECT CONTROLS Ltd.
HK Tsuen Wan, Kowloon
Tel +852 2493 7726
joeip@perfectcontrols.com.hk

PT. Carakamas Inti Alam
ID 11460 Jakarta
Tel +62 215607952-55
auma-jkt@indo.net.id

AUMA INDIA PRIVATE LIMITED.
IN 560 058 Bangalore
Tel +91 80 2839 4656
info@auma.co.in
www.auma.co.in

ITG - Iranians Torque Generator
IR 13998-34411 Teheran
+982144545654
info@itg-co.ir

Trans-Jordan Electro Mechanical Supplies
JO 11133 Amman
Tel +962 - 6 - 5332020
Info@transjordan.net

AUMA JAPAN Co., Ltd.
JP 211-0016 Kawasaki-shi, Kanagawa
Tel +81-(0)44-863-8371
mailbox@auma.co.jp
www.auma.co.jp

DW Controls Co., Ltd.
KR 153-702 Gasan-dong, GeumChun-Gu,, Seoul
Tel +82 2 2624 3400
import@actuatorbank.com
www.actuatorbank.com

Al-Arfaj Engineering Co WLL
KW 22004 Salmiyah
Tel +965-24817448
info@arfajengg.com
www.arfajengg.com

TOO "Armaturny Center"
KZ 060005 Atyrau
Tel +7 7122 454 602
armacentre@bk.ru

Network Engineering
LB 4501 7401 JBEIL, Beirut
Tel +961 9 944080
nabil.ibrahim@networkenglb.com
www.networkenglb.com

AUMA Malaysia Office
MY 70300 Seremban, Negeri Sembilan
Tel +606 633 1988
sales@auma.com.my

Mustafa Sultan Science & Industry Co LLC
OM Ruwi
Tel +968 24 636036
r-negi@mustafasultan.com

FLOWTORK TECHNOLOGIES CORPORATION
PH 1550 Mandaluyong City
Tel +63 2 532 4058
flowtork@pldtdsl.net

M & C Group of Companies
PK 54000 Cavalry Ground, Lahore Cantt
Tel +92 42 3665 0542, +92 42 3668 0118
sales@mcss.com.pk
www.mcss.com.pk

Petrogulf W.L.L
QA Doha
Tel +974 44350151
pgulf@qatar.net.qa

AUMA Saudi Arabia Support Office
SA 31952 Al Khobar
Tel + 966 5 5359 6025
Vinod.Fernandes@auma.com

AUMA ACTUATORS (Singapore) Pte Ltd.
SG 569551 Singapore
Tel +65 6 4818750
sales@auma.com.sg
www.auma.com.sg

NETWORK ENGINEERING
SY Homs
+963 31 231 571
eyad3@scs-net.org

Sunny Valves and Intertrade Corp. Ltd.
TH 10120 Yannawa, Bangkok
Tel +66 2 2400656
mainbox@sunnyvalves.co.th
www.sunnyvalves.co.th

Top Advance Enterprises Ltd.
TW Jhonghe City, Taipei Hsien (235)
Tel +886 2 2225 1718
support@auma-taiwan.com.tw
www.auma-taiwan.com.tw

AUMA Vietnam Hanoi RO
VN Hanoi
+84 4 37822115
chiennguyen@auma.com.vn

Australia

BARRON GJM Pty. Ltd.
AU NSW 1570 Artarmon
Tel +61 2 8437 4300
info@barron.com.au
www.barron.com.au

AUMA Riester GmbH & Co. KG

P.O.Box 1362
DE 79373 Muellheim
Tel +49 7631 809 - 0
Fax +49 7631 809 - 1250
riester@auma.com
www.auma.com

Y004.903/003/en/1.14

For detailed information on AUMA products refer to the Internet: www.auma.com

ISLIP FLOW CONTROLS Inc.

Installation and Maintenance Instructions for IFC Y Strainers

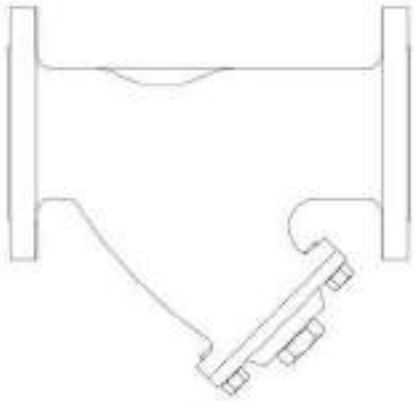

VOGT POWER INTERNATIONAL
V17491-PVXE-533-00
17-Jan-2017

Installation and Maintenance Instructions for IFC Y Strainers

Strainer Installation Instructions

- [illegible]
- [illegible]
- [illegible]
- [illegible]

IMPORTANT! [illegible]

Strainer Removal Instructions

- Dr[illegible]
- [illegible]
- [illegible]
- [illegible]
- R[illegible]

CAUTION SHOULD BE TAKEN DUE TO POSSIBLE EMISSION OF PROCESS MATERIAL FROM PIPING.

Maintenance Instructions

[illegible]

Trouble Shooting Guides and Diagnostic Techniques

- [illegible]
- [illegible]

Limited Warranty

[illegible]

Other than to repair, replace or refund described above, the purchaser agrees that the manufacturer shall not be liable for any losses, costs, expenses or damages of any kind arising out of the product, its use, installation or replacement, labeling, instructions, information or technical data of any kind, description of product use, sample or model, warnings or lack of foregoing. No other warranties, written or oral, expressed or implied, including the warranties of fitness for a particular purpose and merchantability, are made or authorized. No affirmation of fact, promise, description of product use or sample or model shall create any warranty from the manufacturer, unless signed by the president or vice-president. These products are not manufactured, sold or intended for personal, family or household purposes.

Manufactures Information

Islip Flow Controls Inc.
Phone: (905) 335-8777 866-872-0072
Fax: (905) 335-0977 866-872-0073

Contact: Derek Islip-Contact/Sales Inquiries
Scott Islip- Engineering/Projects
Lee Spalding- Operations

ISLIP FLOW CONTROLS Inc.

ifc@islipflowcontrols.com

1145 Sutton Dr., Unit 32
Burlington, ON, Canada
L7L 5Z8

P.O. Box 2000
Buffalo, NY
14240-2000

Tel.: 905-335-8777 Fax: 905-335-0977
Toll Free Tel.: 1-866-872-0072
Toll Free Fax: 1-866-872-0073

PROJECT HANDLING, SHIPPING & PRESERVATION PROCEDURES

Each Individual Item shall be packaged as requested by the Customers Purchase Order.

Critical machined surfaces and all openings shall be protected from metal to metal contact and the intrusion of dust, dirt, moisture and other forms of contamination, using plastic caps/plugs, and protectors, and/or wood covers with gaskets. Covers shall be securely attached to withstand rough handling and be bolted if possible and any gap sealed. Provisions are made to prevent the caps or plugs from being accidentally removed from the openings or pushed aside.

Flange faces shall be protected by covers. The covers shall be adequate to prevent damage to the machined faces.

All electrical connections, plugs, loose wiring will be covered with a plastic plug or wrapped in plastic film to prevent ingress of elements or contamination. *(Use of duct tape or masking tape directly on these components is not allowed.)* Openings in electric motors, generators and other electrical equipment to be sealed with waterproof tape or in some equally efficient manner.

All items shall be adequately protected at all stages of handling and shipment to ensure that they will not suffer damage or contamination of any sort.

All items shall be inspected for cleanliness prior to packaging ensuring that all surfaces are dry and clean.

Each Individual Item, whether packaged alone or with other parts, must be labelled or tagged with it's own part number and marked as required by the specifications in the Purchase Contract.

Goods shall be stored within a fire-resistant, rear-resistant, weather-tight and well-ventilated building or equivalent enclosure. Precautions shall be taken against vandalism. This area shall be situated and constructed so that it will not be subject to flooding; the floor shall be paved or equal, and well drained. Goods shall be placed on pallets or shelving to permit air circulation. The area shall be provided with uniform heating and temperature control or its equivalent to prevent condensation and corrosion.

VOGT POWER INTERNATIONAL
V17491-PVXE-533-00
04-Nov-2016

JONAS, Inc.
CONSULTANTS

Specializing in Sampling and Instrumentation, Corrosion, Water and Steam Chemistry, and Failure Analysis

Lee Machemer, P.E.
4313 Nebraska Court
Pomfret, MD 20675, USA
Phone: (301) 934-5605
Fax: (301) 934-5606
Email: nozzles@steamcycle.com
Web: www.steamcycle.com

Vogt Power Amata ABP84 Project 17491, PO V0010566 Jonas, Inc. Procedure No. 010700-01 Rev. 01/14

DESIGN, INSTALLATION, AND OPERATION OF JONAS, INC. ISOKINETIC SAMPLING SYSTEMS

[illegible]

1. [illegible]

   [illegible]

2. **Weld-in Nozzle:** [illegible]
3. **Flanged Nozzle:** [illegible]
4. [illegible]
5. [illegible]
6. [illegible]
7. [illegible]
8. [illegible]
9. [illegible]
10. [illegible] **THE NOZZLE OPENING SHOULD FACE UPSTREAM.**

VOGT POWER INTERNATIONAL
V17491-P00E-504-00
23-Nov-2016

JONAS, Inc.
CONSULTANTS

Specializing in Sampling and Instrumentation, Corrosion, Water and Steam Chemistry, and Failure Analysis

Lee Machemer, P.E.
4313 Nebraska Court
Pomfret, MD 20675, USA
Phone: (301) 934-5605
Fax: (301) 934-5606
Email: nozzles@steamcycle.com
Web: www.steamcycle.com

11. The selection of the isolation valves should ensure that there is a minimum change of cross-section between the bore of the Sampling Nozzle and the orifice of the valve. The valves should also provide minimum restriction to sample flow. Valve material should be 316 stainless steel.
12. The length of sample line between the Nozzle and the primary cooler (where used) should be as short as possible (not longer than 20 ft.) to minimize the pressure drop and reduce the possibility of impurity deposition in the sample line. The ID of this sample tubing should be as close to the Nozzle bore size as possible to minimize changes in cross-sectional area.
13. The sample tubing should form a coil (see Figure 1) or a series of bends after the isolation valves, to allow for any movement or expansion of the pipe.
14. At the isokinetic sampling rate, the size of the condensed sample line after the cooler should be selected to obtain a minimum flow velocity of 5 to 6 ft/sec (turbulent flow) in the sampling line. This will reduce the possibility of impurity deposition in the sampling line. Typically the required tube size after the primary sample cooler is ¼ inch OD, 0.049 inch wall thickness 316 SS tube.
15. There should be at least 6 hours of isokinetic sample flow to stabilize the sampling system before taking a sample for analysis. Continuous flow is preferred.
16. Because of the required small sizes of the Nozzle bore and valves, the valve closing and opening must be done without excessive force and bending of the assembly must be avoided. When first in use, check for leaks, vibration, valve closing and opening, and personnel safety issues.
17. The Nozzle, boss or flange, valves, valve connecting pieces, tubing, and all welds should be periodically inspected for cracking, and other forms of damage. For sampling wet steam and liquid water, the piping section after the Nozzle should be periodically inspected for thinning by flow-accelerated corrosion (erosion-corrosion) and for installations sampling liquid water also for cavitation.
18. For steam cycles where steam is contaminated with sodium hydroxide or chloride, inspection for cracking, particularly in the weld areas should be performed more frequently.
19. Periodic cleaning of the cooling water side of the coolers may be required to maintain proper heat transfer. The frequency of cleaning depends upon the scaling properties of the cooling water.

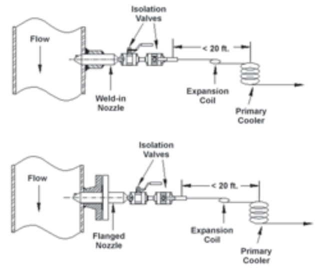

Figure 1. Installation of weld-in Nozzle (top) and flanged Nozzle (bottom)

Copyright 2014, Jonas, Inc. - All rights reserved

JONAS, Inc.
CONSULTANTS

Specializing in Sampling and Instrumentation, Corrosion, Water and Steam Chemistry, and Failure Analysis

Lee Machemer, P.E.
4313 Nebraska Court
Pomfret, MD 20675, USA
Phone: (301) 934-5605
Fax: (301) 934-5606
Email: nozzles@steamcycle.com
Web: www.steamcycle.com

Vogt Power Amata ABP84 17491 PO V0010566 Jonas, Inc. Procedure No. 010700-03 Rev 01/14

Nozzle Tag Nos: 51-HAH10BB001
52-HAH10BB001

WELDING OF JONAS, INC. SAMPLING NOZZLE WITH INTEGRAL BOSS

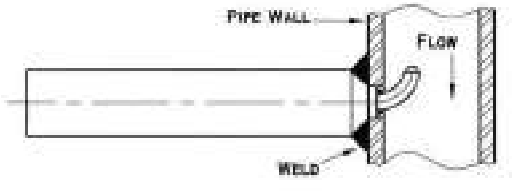

Figure 1

1. Refer to Jonas, Inc. Procedure No. 010700-01, "Installation and Operation of Jonas, Inc. Sampling Systems", for additional instructions.
2. The integrated boss and nozzle shown in Figure 1 is to be used in pipes with diameters smaller than 6 in. The boss material should be compatible with the pipe material on which it is to be installed.
3. Drill a hole (-0 to +0.0016 inch) in the pipe wall at the location for nozzle insertion to match the outside diameter of the ledge where the nozzle tip meets the nozzle body (typically 0.50, 0.625, 0.75, or 1.05 inches OD). Insert nozzle until the start of the tapered section meets the pipe wall (See Figure 1 above). Ensure that the nozzle is correctly oriented so that the tip faces the flow.
4. Using an approved welding procedure, weld the assembly to the pipe. Selection of the welding procedure and the welding are the responsibility of the user.
5. If not already attached, the first root valve is installed directly on the nozzle end. The second root valve is installed directly after the first using a short connecting piece.
6. The sample tubing attached to the valve should be flexible, not introducing high stresses.

Copyright 2014, Jonas, Inc. - All rights reserved.

VOGT POWER INTERNATIONAL
V17491-P00E-506-00
23-Nov-2016

I. O. & M. Manual

Installation

Operation

Maintenance

.187 Orifice Valves and Manifolds with Three-Piece Style, Packed (Adjustable) Bonnets

PGI International

Excellence Through Innovation

VOGT POWER INTERNATIONAL
V17491-E00-504-00
02-Dec-2016

For .187 Orifice Valves and Manifolds with Three-Piece Style, Packed (Adjustable) Bonnets

1.0 INTRODUCTION

This valve/manifold is supplied with either a soft seat or a hard seat sealing option. The packing is field adjustable and positioned below the stem threads for long service life.

2.0 INSTALLATION

2.1 Remove the valve/manifold from the shipping box and check the body stamping for correct part or identification number.

2.2 Prior to valve/manifold installation, check the piping to which the valve or manifold is to be connected for cleanliness and remove any foreign debris.

2.3 Thread Valve Installation

2.3.1 All pipe or fitting connections must be made tight. NPT pipe joints depend on a good, smooth engagement between the male and female pipe threads, usually with the use of a thread sealant. Typically, Grafoil tape is used in high temperature applications. For low temperature applications, Teflon tape or other standard pipe thread sealants may be used.

2.3.2 Check the threads on both the valve/manifold and the mating pipe for cleanliness.

2.3.3 Do not use excessive wrenching force on an NPT pipe joint. Refer to the chart below for the proper torque for your NPT pipe connection fitting.

PIPE OR TUBE ANSI/ASME B1.20.1 NOMINAL INCH	TIGHTENING TORQUE		
	INCH-POUNDS IN-LBS	FOOT-POUNDS FT-LBS	METER-NEWTONS M-N
1/4	600	50	68
3/8	700	58	79
1/2	850	71	96
3/4	1,000	83	113
1	1,200	100	136

3.0 OPERATION

3.1 Hand valves which have been reasonably matched to a typical service application and properly installed in its piping system can be expected to have a long service life with minimum attention. However, valves have moving and wearing parts and depend on long term preservation of highly finished surfaces on the stem, the ball and the bonnet body for satisfactory performance.

3.2 The handle of the valve has been designed to provide an adequate seating force to seal the valve against the maximum pressure of the valve without the use of additional mechanical advantage. The use of a "cheater" to operate the valve is **not necessary, not recommended, and can cause valve damage**.

3.3 All valves have rising stems with right-hand thread. Rotate the handle counter-clockwise to open and clockwise to close.

3.0 OPERATION (cont'd)

3.4 Valves with rising stems are provided with a backseat. The backseat is a shoulder on the stem or other part of the stem-disk assembly which engages a corresponding seat shoulder on the inner side of the bonnet.

It has become generally recognized that the use of the stem backseat for stem sealing may mask unsatisfactory condition of the stem seal. For this reason, the use of the backseat for normal operation stem sealing is NOT recommended. The backseat in rising stem valves should be regarded simply as a "stop" to prevent overtravel when opening the valves. Normal practice should be to unseat the backseat slightly.

If it is necessary to use the backseat for stem sealing, it should be recognized that backseats are usually smaller than the main seat and care should be taken to avoid applying excessive stem force in backseating.

4.0 VALVE / MANIFOLD MAINTENANCE

4.1 The important performance parameters are "pressure boundary integrity", "actuating force required", and "internal leak tightness". Maintenance should logically address the importance of preserving these performance parameters.

4.2 Valves which remain in one position for long periods of time may be subject to some loss of operability due to the loss of effective lubricants in threads, aging of packing surface, corrosion of moving parts, or accumulation of harmful solids. In some applications, it may be desirable to schedule periodic partial or full cycle operation of those valves.

4.3 Stem seal leakage usually results from seal wear and can usually be corrected by replacing or adjusting the stem seal.

4.4 Stem Packing Adjustment

NOTE: This operation may be performed safely with the valve under full line pressure.

Refer to Section II on page 5, for PACKING ADJUSTMENT INSTRUCTIONS.

4.5 Adding Stem Seal Packing

CAUTION

REMOVE ALL PRESSURE FROM THE VALVE BEFORE SERVICING.

Refer to Section III beginning on page 6,
for ADDING STEM SEAL PACKING INSTRUCTIONS.

5.0 POST ASSEMBLY INSPECTION

Turn the handle to fully open and close the valve. Check for binding, rubbing or any resistance to smooth operation.

.187 ORIFICE PACKED BALL SEAT VALVE

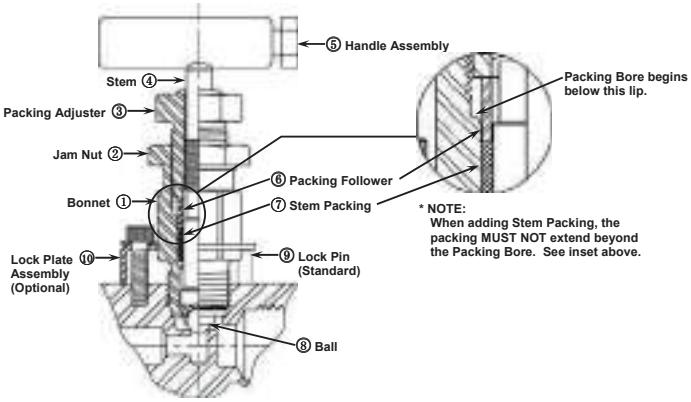

FIGURE 1

VALVE/MANIFOLD MAINTENANCE

PACKING	PART NUMBER	QTY. PER BONNET
Teflon	P5-292-R0	1 required
Grafoil	P5-025-R0	1 or 2 required (See *Note above.)

MANIFOLDS ONLY

FLANGE SEALS	PART NUMBER	QTY. PER MANIFOLD
Teflon	P5-018-R0	1 per Pressure Manifold
Grafoil	P5-018-R1	2 per ΔP Manifold

II. PACKING ADJUSTMENT INSTRUCTIONS

NOTE: The stem packing adjustment can be performed safely while the valve or manifold is under full line pressure. Refer to Figure 1 for corresponding part names and numbers.

Tools Needed:
3/4" Open-End wrench, 11/16" Open-End wrench, 5/8" Open-End Wrench

1. Turn the Handle Assembly counter-clockwise until the valve is fully open. This **MUST** be done prior to adjusting the packing.

2. Loosen Jam Nut with the 11/16" open-end wrench by turning it counter-clockwise.

3. Using the 5/8" open-end wrench, tighten the Packing Adjuster by turning it clockwise 1/8 turn at a time, until the leak is corrected.

Once the leak has been corrected, do not tighten the Packing Adjuster any further.

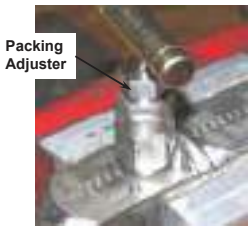

CAUTION

If the Packing Adjuster will not turn with reasonable force, it has become bottomed out and the Stem Packing (Item 7 in Fig. 1) must be replaced. See Section III on page 6, for ADDING STEM SEAL PACKING INSTRUCTIONS.

4. Re-tighten the Jam Nut snug with the 11/16" open-end wrench.

5. Operate the Stem from fully open to fully closed, to ensure that the leak has been corrected.

6. Your valve/manifold is now ready for normal operation. Place the Stem in the desired operating position.

III. ADDING STEM SEAL PACKING INSTRUCTIONS

CAUTION!

Remove all pressure from the valve or manifold before servicing. Failure to do so could result in serious injury or death.

Tools Needed: 3/4" Open-End Wrench, 11/16" Open-End Wrench, 5/8" Open-End Wrench, 7/16" Open-End Wrench, 9/64" Allen Wrench, Pliers, Flat Blade Screwdriver, 1/4" Punch

NOTE: Refer to Figure 1, for corresponding part names.

1. **After removing all pressure from the valve or manifold,** turn the Handle Assembly counter-clockwise until the valve is fully open. This **MUST** be done prior to bonnet assembly and disassembly.

2. Loosen the Jam Nut with the 7/8" open-end wrench.

3. Remove the Allen screw from the Lock Plate Assembly using the 9/64" Allen wrench, or, if there is no Lock Plate, remove the Lock Pin using the pliers.

Remove Allen Screw or Remove Lock Pin

IMPORTANT

The used Lock Pin (Item 9 in Fig. 1) must be discarded.

III. ADDING STEM SEAL PACKING INSTRUCTIONS

4. Place the 3/4" open-end wrench on the Bonnet Body and remove the Bonnet Assembly from the valve/manifold by turning counter-clockwise.

5. Clean and inspect the threads on the Bonnet and inside the valve/manifold seat pocket.

CAUTION

If the Bonnet or seat pocket threads appear damaged or corroded, DO NOT try to repair the valve or put it back in service.

NOTE

If the entire Bonnet Assembly is being replaced, GO TO STEP #16.
If only the packing is being added, using the existing Bonnet Assembly, continue to step #6.

6. Using a 7/16" open-end wrench, remove the Handle Assembly from the Stem by loosening the hex head bolt four full turns and pulling the Handle Assembly off. It may be necessary to tap the handle lightly to break it away from the Stem.

III. ADDING STEM SEAL PACKING INSTRUCTIONS

7. Turn the top of the Stem clockwise until it can be turned by the Ball end at the bottom of the Bonnet Body, then turn the Ball end of the Stem counter-clockwise until it can be removed from the bottom of the Bonnet Body.

8. Using the 5/8" open-end wrench, turn the Packing Adjuster counter-clockwise until it is completely disengaged from the Bonnet Body.

9. Using the flat blade screwdriver, push the Packing Follower out of the Bonnet cavity.

10. Inspect the seal surface on the Stem for scratches and gouges. Replace the entire Bonnet Assembly if scratches or gouges are present.

III. ADDING STEM SEAL PACKING INSTRUCTIONS

11. Insert new Stem Packing (Item 7 in Fig. 1) into the Bonnet Body.

Teflon Packed—1 ring required
Grafoil Packed—1 or 2 rings required

See Valves and Manifolds Chart on page 4, for Packing Part Numbers.

Make sure the Packing Rings lie flat and below the larger bore in the Bonnet Body. (See Figure 1 inset.)

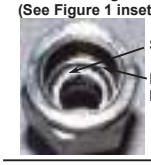

12. Insert the Packing Follower on top of the Stem Packing.

13. Lightly lubricate the Packing Adjuster threads only with Nickel Anti-Seize 2400°F and re-install the Packing Adjuster into the top of the Bonnet just until it stops against the Packing Follower, **then loosen 1/2 turn.**

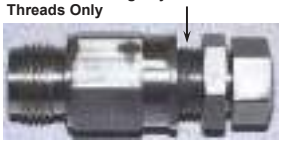

14. Lightly lubricate the Stem threads only with Nickel Anti-Seize 2400°F and re-install the Stem from the bottom of the Bonnet.

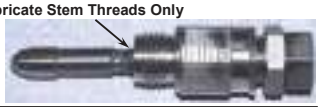

15. From the bottom of the Bonnet Body (as shown above), turn the Stem into the Bonnet Body **clockwise** as far as possible using your fingertips. Align the flat on the Stem with the Hex Head Bolt in the Handle Assembly and re-install the Handle. Tighten with the 7/16" open-end wrench.

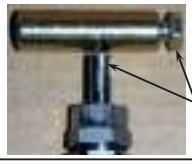

16. Turn the Handle **counter-clockwise** until you feel the Stem backseat against the Bonnet. The Ball (Item 8 in Fig.1) is now in the "full up" position.

WARNING!

Make sure the Ball is in the "full up" position, as shown. Failure to do so could damage the seat and/or the Bonnet.

III. ADDING STEM SEAL PACKING INSTRUCTIONS

17. Lightly lubricate the Bonnet threads with Nickel Anti-Seize 2400°F.

18. If your valve/manifold is outfitted for a Lock Plate, slip it all the way up to the top of the Bonnet Body at this time.

If your valve/manifold is not outfitted for a Lock Plate, go to step 26b.

19. Hold the Lock Plate at the top of the Bonnet while turning the Bonnet Assembly into the valve/ manifold body with your fingertips.

DO NOT TURN THE HANDLE TO INSTALL THE BONNET.

20. Once the Bonnet makes contact with the valve/ manifold, allow the Lock Plate to fall to the bottom of the Bonnet and tighten the Bonnet Body to 35 ft.-lbs., using the 3/4" open-end wrench.

See NOTE below for torque approximation

NOTE
A solid pull-down with a 6" long, open-end wrench by hand, with no cheater devices, will approximate the required torque.

III. ADDING STEM SEAL PACKING INSTRUCTIONS

21. a) Teflon Packed Bonnets
Tighten the Packing Adjuster finger-tight, then tighten 1/2 turn with the 5/8" open-end wrench.
Note: The Stem should now have a smooth, firm operating feel.

b) Grafoil Packed Bonnets
Tighten the Packing Adjuster finger-tight, then tighten 1-1/2 turns with the 5/8" open-end wrench.

22. Turn the Handle Assembly clockwise until fully closed; hand-tight only.

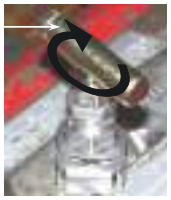

23. Pressurize the system and check for leaks.
Note: If leakage appears around the pocket, make sure the Bonnet Body has been tightened to 35 ft.-lbs.

If leakage appears in this area, tighten Bonnet Body to 35 ft.-lbs.

Note: If leakage appears in the upper portion of the Bonnet Assembly, turn the Packing Adjuster clockwise 1/8 turn at a time, until the leak is corrected.

DO NOT TIGHTEN MORE THAN 1/8 TURN PAST THE POINT WHERE THE LEAK STOPPED.

Over tightening will use up valuable packing range adjustments.

If leakage appears in either of these areas, turn the Packing Adjuster 1/8 turn until the leak is corrected.

III. ADDING STEM SEAL PACKING INSTRUCTIONS

24. Once no leakage is detected, tighten the Jam Nut snug with the 11/16" open-end wrench.

25. Lift the Lock Plate and locate the threaded lock screw hole.

If your valve/manifold is not outfitted for a Lock Plate, go to step 26b.

26. a) Orient the Lock Plate so that the Lock Screw Hole is accessible through the cut-out and allow the Lock Plate to fall to the valve/manifold body.

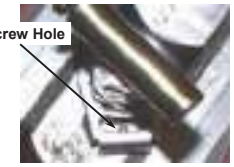

b) If your valve/manifold is not outfitted for a Lock Plate, the Lock Pin Hole must be accessible to install the Lock Pin. If the Lock Pin Hole is obstructed, turn the Bonnet Assembly clockwise until the Lock Pin may be installed.

WARNING!
Never loosen the Bonnet Assembly to gain access to the Lock Pin Hole.

III. ADDING STEM SEAL PACKING INSTRUCTIONS

27. a) Insert the Lock Screw and tighten with the 9/64" Allen wrench.

OR,

b) Insert a new Lock Pin into the Lock Pin Hole and, using the 1/4" punch, drive the Pin to the bottom of the hole.

IMPORTANT!
Never reuse an old Lock Pin.
Be sure the Lock Pin is driven to the bottom of the hole.

28. Your valve/manifold is now ready for normal operation. Place the Stem in the desired operating position.

STORAGE RECOMMENDATIONS
Store indoors in a dry location until time to install equipment.

PENTAIR

Global Projects

Document Summary

14-Nov-2016

Customer / End-User	VOGT Power International
Project Name:	V17491
Customer Purchase Order:	V0010864
Pentair Sales Order:	T367601

Pentair Document Number:	T367601-GR1-001
Vogt Document Number:	-
Document Description:	Operation and Maintenance Manual
Drawing Number:	-
Revision:	0
Item No.:	20
Tag Number(s):	51MAK03AC001 52MAK03AC001

Notes:

VOGT POWER INTERNATIONAL	
Release Stamp Required	
Release Stamp	Nov-29-2016

VOGT POWER INTERNATIONAL
V17491-ICXE-506-00
14-Nov-2016

PENTAIR

YARWAY A.T.-TEMP DESUPERHEATER STANDARD/HEAVY DUTY
INSTALLATION AND MAINTENANCE INSTRUCTIONS

Before installation these instructions must be fully read and understood

MODEL 3844 STANDARD DUTY

MODEL 3856 AND 3866 HEAVY DUTY

ATTENTION WHEN PUTTING INTO OPERATION
Readjust Stuffing box immediately as required due to installation, leakage is not of operation.

UNPACKING

The Yarway A.T.-Temp Desuperheater is packed with the greatest of care to protect it against damage during handling and transport to site. After unpacking, leaving the A.T.-Temp Desuperheater (and protect) through with a high grade of oil lubricant to protect machined and internal surfaces from corrosion. It is natural, however, that damage has occurred during shipment. Any this should be reported immediately to your forwarder or Pentair representative.

INSTALLATION OF THE A.T.-TEMP DESUPERHEATER

Before commencing check the A.T.-Temp Desuperheater, pipework and accessories for any visible damage.
Check that the information on the documentation, identification plate and tag number complies with the order specification. Remove the A.T.-Temp Desuperheater carefully from its packaging. Dispose means of slings around the body. Do not use the water inlet connection, valve, actuator or any of its accessories for lifting. Lower the flange inserts in place during transportation, until ready to install in the pipework.

WARNING
The fastening is for the accessories only, NOT for pipe pressure!

When installing the A.T.-Temp Desuperheater use gaskets and bolting material in accordance with the relevant piping code. For example ASME/ANSI B31.1 or DIN/TRD/Dlin. Place the gasket onto the mounting flange and carefully insert the nozzle into the branch pipe. Ensure that the spray cylinder is pointed in the direction of the steam flow before tightening the mounting bolts (see figure 2).

NOTE: The A.T.-Temp Desuperheaters should be installed free of forces, moments and torques.

www.pentairvalves.com © 2013 Pentair plc. All rights reserved. PCDM0023-EN 10/13

YARWAY A.T.-TEMP DESUPERHEATER STANDARD/HEAVY DUTY
INSTALLATION AND MAINTENANCE INSTRUCTIONS

The A.T.-Temp Desuperheater is provided with a standard inlet spool length, as specified in the contract drawing and the mounting brackets for the steam pipework. A spool is supplied to suit. The length of the branch should be such that the centreline of the jet will be located in the centreline of the steam pipe (1.5 mm).
The mounting bracket should be 2 - 10% BE nominal bore, maximum pipe schedule 160 for convenience purposes (check the applicable piping code).

RECOMMENDATIONS
Joint Cleaning of steam pipework
Remove A.T.-Temp Desuperheater from the piping prior to joint cleaning.

The minimum pipe run, required downstream of the A.T.-Temp Desuperheater, varies with each individual application and would be specified by Yarway or the industry design. This straight run is needed to prevent moisture due to impingement of water droplets against pipework, valves and fittings and is normally in the order of 6 to 8 diameters, an approximate optimum straight length is normally required.

The distance from the A.T.-Temp Desuperheater to the temperature sensor is normally 5 to 10 metres, although this distance varies, as the application and the availability therefore on the process stage. Longer distances can ensure that full evaporation of the water droplets takes place in fewer instances.
The temperature sensor should be fitted in the upper half of the pipe, avoid dead legs of the steam pipework between the A.T.-Temp Desuperheater and the sensor (see figure 2).

FIGURE 1 - MODEL 3844

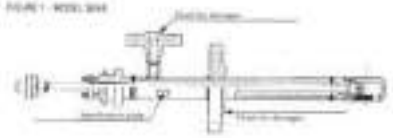

FIGURE 2 - MODEL 3856 AND 3866

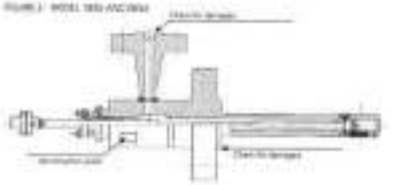

FIGURE 3

WATER FLOWED VERTICAL

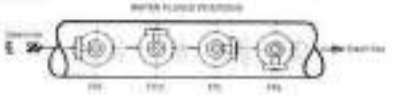

HORIZONTAL POSITION

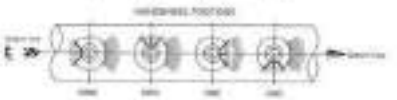

YARWAY A.T.-TEMP DESUPERHEATER STANDARD/HEAVY DUTY
INSTALLATION AND MAINTENANCE INSTRUCTIONS

FIGURE 4

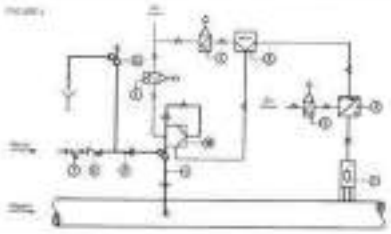

Item	Description
1	Temperature transmitter
2	Temperature transmitter
3	Temperature controller
4	A.T.-Temp Desuperheater
5	Air line regulator
6	Stop valve
7	Strainer
8	Check valve
9	Flange
10	Pressure - to-UPS transmitter

Pipe bends should always be of the long radius type to avoid in keeping the water droplets in suspension, and consequently avoid erosion in the steam pipework. Installations may be in vertical or horizontal piping, but the direction of steam injection should always be with the steam flow. The A.T.-Temp Desuperheater may be mounted at 90° to the steam pipe. For all mount flow orientations, and avoid installation in the vertical downwards position. (see figure 3).
Yarway supplies the A.T.-Temp Desuperheater as follows:
Identification number:
- e. 3844 - Fabricated type with non-balanced stem
- e. 3856 - Flow-compensated with semi-balanced stem and extended trim
- e. 3866 - Forged type with semi-balanced stem
- e. 3866 - Forged type with semi-balanced stem and extended trim, as well as spray cylinder back-seated in the fully extension stem

NOTE: Normally you require A.T.-Temp Desuperheater has to be installed with a support for weight compensation.

The water supply should be of a good quality, clean and free of, for example harder feed water and should have a constant pressure as specified in the order documents. Back water supply line should be oriented vertical in a way individual drainer with a maximum internal diameter you of 1.1 mm. Fit a manual isolation for isolation / shut and cut.
Where there are positive shut off components in the water supply from ceiling source, an adjacent thermo safety relief valve of an approved type should be fitted. As in the case of the steam pipework, use gaskets and bolting in accordance with the relevant piping code. Flush out the water line before connecting to the A.T.-Temp Desuperheater mounting flange (see figure 4).

FIGURE 5

START-UP

Ensure that all components are installed correctly. Connections of electrical supplies and instrument air piping should be in accordance with the manufacturer's instructions, especially the pneumatic signal.
Verify and adjust, if necessary, the pilot for the valve regulators and operation of every actuator by using the manufacturer's recommendations.
Similarly, calibrate the temperature transmitters/controller, verifying automatic response to temperature changes.

Now the water main and open the valve in the water supply. Check the water pressure at the A.T.-Temp Desuperheater. Verify the operation of the temperature transmitter and controller by manually increasing and decreasing the output signal and observing indicated and recorded temperatures.
When satisfied that coordination between measurement signals and temperature are adequate, adjust the set point and control ranges and the system standard and automatic operation.
It is recommended to record the various control coordinates, over a substantial period, to verify operation, adjusting where necessary.

MAINTENANCE

Note: maintenance of the A.T.-Temp Desuperheater is straightforward and does not require any special tools or training. Care should be taken during any maintenance operation, particularly when working with synthetics, compressed air and rotating machinery. It is imperative that safety glasses and plastic/rubber aprons are used in accordance with Standard Safety Procedures. In case of doubt, consult your Department of Safety Officer before commencing any work on the equipment.

Removal

Before removing the A.T.-Temp Desuperheater from the system, ensure that both the steam- and water appendages are properly isolated. Include any direct local supplies to the actuator and/or accessories prior to disconnection. Remove all flange nuts and any clamp plates. Loosen union flange and water flange bolting, and start connections before completely removing.

The A.T.-Temp Desuperheater may now be lifted out from the system. It is recommended that the A.T.-Temp Desuperheater is transported to a convenient workshop which has a workbench and vice. Lift the unit by means of slings around the body. Do not attempt to lift the A.T.-Temp Desuperheater by the pipe, actuator or any of its accessories.

Depending upon the type of actuator there will be a flame trap plug in the pipe. Measure its length and record the dimension. A and B (see figure 2) for reassembly purposes. Also note position of any bend or opening flange, and bring it necessary, prior to removal. If any work is required on the actuator, then please refer to the actuator manufacturer's manual.

FIGURE 2

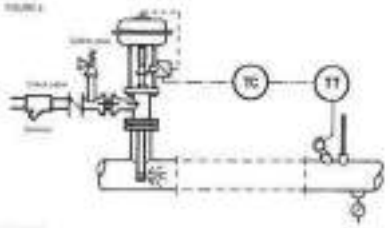

FIGURE 3

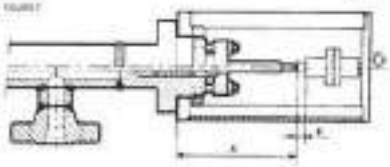

Disassembly (see Figure 4)

The A.T.-Temp Desuperheater can be disassembled, most easily when on the workbench, in the following way. Unscrew the body extension and remove the body extension and the flame trap plug. Cut off the nuts and bolts holding and remove flange or stage gaskets. Make sure that the seat is removed sufficiently to allow rotation of the balance ring without binding.

Unscrew the balance ring by rotating counterclockwise. Make sure the threading on the body extension is right handed. Tapping the balance ring with a hammer may be helpful to remove. Note that the threading on the large cylinder is left handed. Tightly screw and remove the cylinder. Note that the threading on the balance ring, then the seat, may be removed by gripping threads on the diameter only, especially if worn. Remove carefully and to damage the body and spray cylinder threading.

Cylinder/stem

Once removed, inspect the condition of the cylinder internally, using a flashlight. Scratches and deposits may be removed by either polishing or honing.
The cylinder bore should not exceed 25 mm with a maximum ovality of 0.20 mm. Debris can be removed from the cylinder by blowing through with compressed air, water in the inlet or outlet port. Do not have polishing difficult on the A.T.-Temp Desuperheater performance. Carefully clean the cylinder threading, dressing where necessary, with a hand file.

Body extension

Examine the threading in the body extension, dressing where necessary with a suitable file. In case of extreme damage and/or maintenance, the same body extension should be used. Inspect any repair work. If the threading does become unbalanced, stop repair. However, the repair may be possible. It should be noted that the unit is for a pressure vessel and filler materials must be compatible with both the base material and the service conditions. In the event that such work is necessary, please consult Yarway for further advice.

Plate assembly

Without as the plates are worn. The plates and stem are wheels subjected to a substantial pressure. If the plates show signs of wear and tear, then it may be in order to replace. Replace stem rings as a matter of course, also note that the unit is disassembled. Take care not to damage the plate inspection fitting. The inspection hole has high unscribed overlap point in the direction of the stuffing box, for proper functioning. Examine the condition of the stem, where it runs in the stuffing box, ensure any graphite with a fine grade abrasive cloth, polishing in the longitudinal direction.

Stuffing box

Remove all rings, remove ring and packing material from the inner body. Clean the stuffing box sensitively, using a rotating wire brush and/or honing device. Dissolve of the working area in solution (angles same seating). Do not use grease or lubricants in conjunction with graphite packing. Only use real genuine Yarway components, as their are supplied as matched sets (see figures 7 and 10).

FIGURE 4

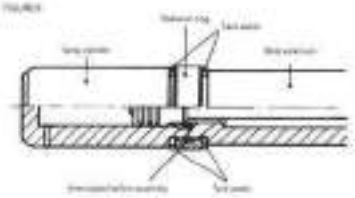

Packing set

CAUTION

Before repacking any valve, make current safety precautions (if other) as applicable or the particular valve being serviced.

1. Completely remove the packing including any separate washers or lantern rings. If any. Make sure that surfaces contacting packing are clean; inspect the stuffing box surfaces for any damage, wear, scratches, pitting and other service marks which would prevent establishment of a good seal around the packing. In smooth, undamaged surface is essential a good packing. Repair or replace as necessary.
2. If a spacer is supplied with the packing or if a lantern ring is removed from the stuffing box make sure it is installed first. If one end of the spacer is chamfered, make chamfered end depart as that holds up bottom of stuffing box.
3. Packing is supplied as a complete set and rings should be in same order as packaged in the set. Install packing set in correct order, see figure 8/10.
4. Check packing rings for proper fit. They should be a snug fit in the stuffing box.
5. Install one ring at a time. In the proper sequence, using a packing down or space bushing. Rings must be seated individually with a packing tool. The compression of each ring during installation is very important for the lifetime of the seal. Do not use screwdriver or other sharp edged tool to seat the packing. This could damage the packing and/or stem. Ifa packing ring is a split ring make sure that the gap in each consecutive ring is between min 0% of the inner and 0.0 % of the stem and the 0% of the lower and 0% of the stuffing box (do not exceed 1.0 mm 0.0 in.)
6. Stagger the slots of successive rings and avoid ring TOP apart.
7. Do not over compress the packing. The amount of compression should be controlled which is required to the height the cross of number of rings into the stuffing box. Compression of the packing is normally 15% of stuffing box, to make room for the top of the packing, can be accomplished using the gland bushing and bolting up (or into gland nuts).
8. When all the packing has been installed in the stuffing box and the gland bushing or bushing flange are in place, take up on the gland nuts evenly with a wrench to compression the completed packing set to the stuffing box and stem. Compress the packing sufficiently to cause the packing slightly up to the stem. It does not need to be functionally tight, the stem should move freely. If this does occur with more than the packing set is over tightened.
9. Re-tightening of the gland nuts is necessary within a hour after start up. During operation it may be necessary to adjust the gland nuts. Check regular.

FIGURE 7 - MODEL 1844

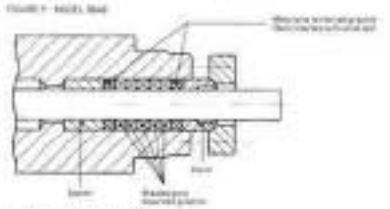

FIGURE 10 - MODEL 1874 AND 2874

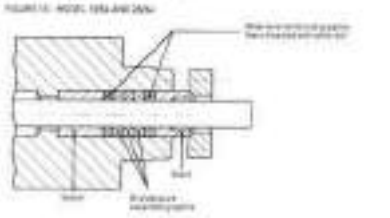

FIGURE 11

DETAIL A

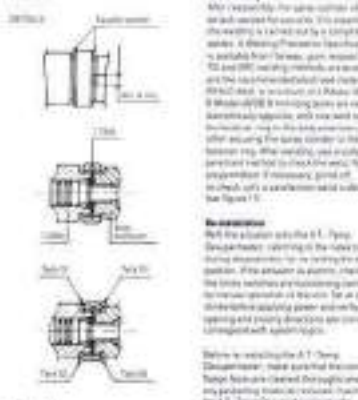

Reassembly

Before reassembling the valve and stem on threads with a suitable high temperature nickel compound. Do not use grease or other oil based lubricants as these may lead to increasing problems later. Apply a thin coat of the compound to the gasket rings to prevent scoring. Position the stem or the plate rings, such that they are at 120° to each other. Reassemble the spray cylinder into the body extension. Use a free glide gasketing paste to ease the seating area of cylinder and body extension. This paste is ideal to make up a consistent seat area in use. Always use a new balance ring. Set the spray cylinder into the correct orientation. Stem seal: spray should always be in the same line as the stem. Hand and tighten the balance ring.

Tack welding

After reassembly, for some cylinder should be tack welded for security. This essential that the welding is carried out by a competent welder. A Welding Procedure Specification is available from Yarway, part number. Both TIG and MIG welding methods are acceptable and the tack welded should need clear tack. Without need, a minimum of a Welder (MIG or TIG) welding joins are required. Alternatively opposite, and one weld securing the balance ring to the body extension, the other securing the same cylinder to the balance ring. After welding, use a suitable tap and hand method to check the seal. No cracks are permitted. If necessary, grind off to check, off a satisfactory weld is allowed (see figure 11).

Re-installation

With the actuator onto the A.T.-Temp Desuperheater, ensure by the name plate during direction to re-fitting the inspection. If the actuator is electric, check that the limits switches are functioning correctly by manual operation of the unit. Set an initial demand before applying power and verify that opening and closing directions are correct and consistent with system logics.

Before re-installing the A.T.-Temp Desuperheater, make sure that the connecting flange faces are cleaned thoroughly and any protecting material removed. Check the A.T.-Temp Desuperheater only the valve appears and check that the inside bore and stem are free with the spray in the direction of the steam flow. Apply a high temperature fastening compound to the bolts and nuts and tighten evenly in accordance with the manufacturer's recommendations. Before connecting the water line, flush through and check for any contamination or foreign in the supply.

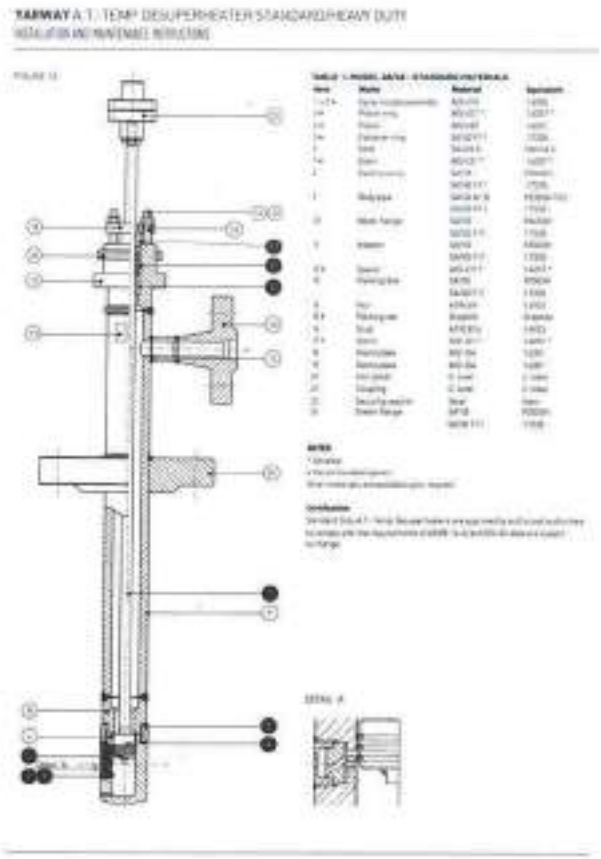

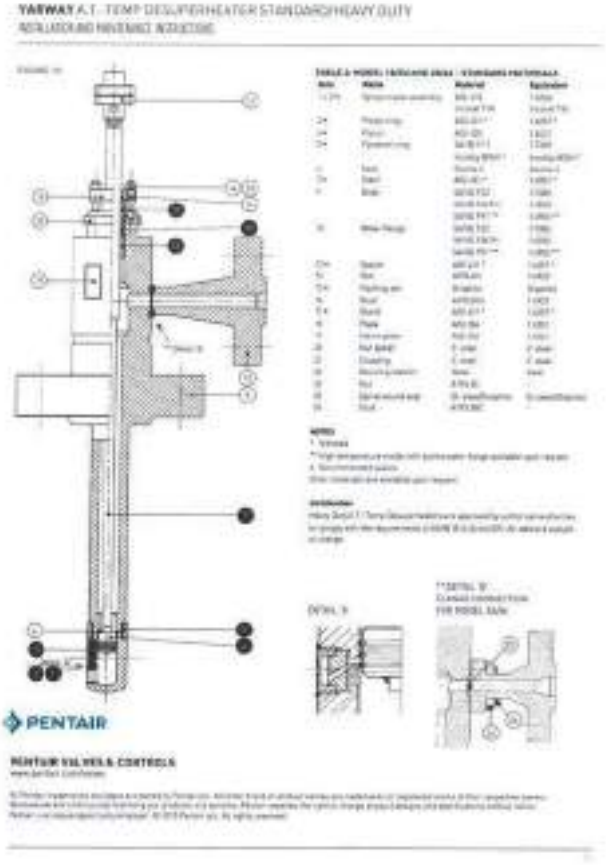

Global Projects

Document Summary

14-Nov-2016

Customer / End-User	VOGT Power International
Project Name:	V17491
Customer Purchase Order:	V0010364
Pentair Sales Order:	7367601

Pentair Document Number:	7367601-J01-001
Vogt Document Number:	-
Document Description:	Operating and Safety Instructions
Drawing Number:	-
Revision:	0
Item No.:	21
Tag Number(s):	51HAH10AC001 52HAH10AC001

Notes:

PENTAIR

YARWAY NARVIK DESUPERHEATERS
FOUND - OPERATING AND SAFETY INSTRUCTIONS

Before installation these instructions must be fully read and understood.

[illegible]

WARNING

[illegible]

INSTALLATION

[illegible]

CATEGORY

[illegible]

NOTE

[illegible]

© 2013 Pentair Ltd. All Rights Reserved

YARWAY NARVIK DESUPERHEATERS
FOUND - OPERATING AND SAFETY INSTRUCTIONS

Final inspection

[illegible]

Volumes

[illegible]

Service life

[illegible]

STATE OF DELIVERY / STORAGE / SELECTION / SERVICE LIFE

State of delivery

[illegible]

Storage

[illegible]

STAGE PARTS

[illegible]

NOTE

[illegible]

PENTAIR

PENTAIR VALVES & CONTROLS
www.pentair.com/valves

[illegible]

PENTAIR

Global Projects

Document Summary

14-Nov-2016

Customer / End-User	VOGT Power International
Project Name:	V17491
Customer Purchase Order:	V0010364
Pentair Sales Order:	T367801

Pentair Document Number:	T367801-C08-001
Vogt Document Number:	-
Document Description:	Technical Data Sheets
Drawing Number:	-
Revision:	0
Item No.:	13
Tag Number(s):	11HAH10AC001 12HAH10AC001

Notes:

VOGT POWER INTERNATIONAL	
Released: Vivek May Prasad	
Hannover, Roorkee	Dec-01-2016

VOGT POWER INTERNATIONAL
V17491-ICXL-525-00
14-Nov-2016

PENTAIR

YARWAY NARVIK MODEL 18/54 AND 28/94
[illegible]

[illegible]

FEATURES

[illegible]

GENERAL APPLICATION

[illegible]

TECHNICAL DATA

[illegible]

© 2013 Pentair Ltd. All Rights Reserved

FIG. 1

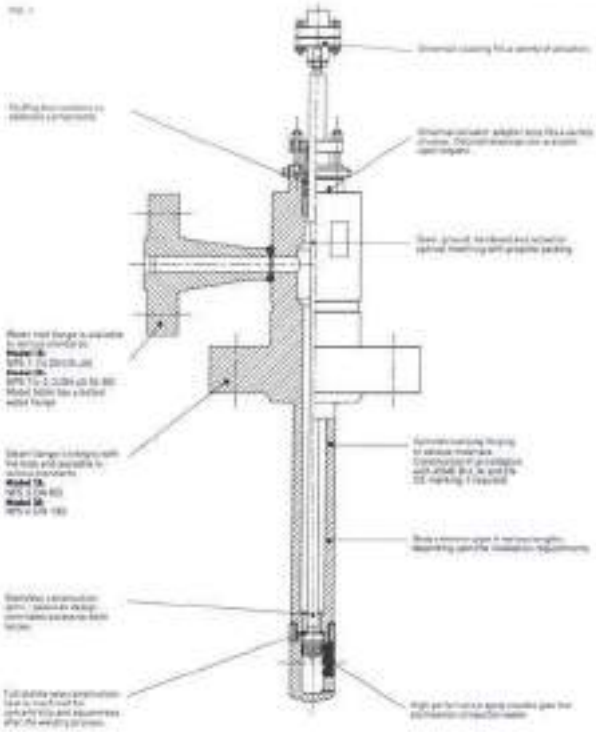

NARVIK SPRAY WATER

Yarway has introduced the latest technology in the narvik nozzle design.
The high quality surface finish minimizes frictional losses, thereby ensuring that the total nozzle is subjected to adequate lubrication of the water (see Fig. 4).
The nozzle consists of two components, fit for either one or 18 the nozzle body. Each nozzle is screwed individual into holes in the cylinder wall. Water enters the nozzle cavity from orifices through these openings.
The relatively large volume of this chamber allows for that water to be injected evenly through each orifice.
This by action this orifice plate results in an increase in the fluid velocity. The water is subsequently injected into the nozzle chamber before being emitted through the central hole. The combination of applying the least flow increasing velocity and creating effect ensures that the water is injected into the steam in a fine mist.

The mechanical friction is low, just as the nozzles are assembled in the spray cylinder and sealed by a vacuum brazing process. This maintains the integrity of these components even under the most arduous conditions.
Maximum compatibility of spray cylinder, which is another large overall power in individual service conditions, is typically found in steam plant operations. This enables complete operation over an extended period.
Surfaces are finished and treated to reduce frictional losses and internal turbulence are designed to optimize water swirl action, ensuring uniform and consistent droplet size.

Minimum pipe available from the A.T. Temp Desuperheater that flange to steam pipework inlet:
Nozzles A through 8b: 1 bar
Nozzles 8 thru 9b: 2 bar

CODES AND STANDARDS

The A.T. Temp Desuperheater is designed and manufactured to meet a wide variety of international codes and standards. Certified as-built documents are available upon request. If material makes or standards are required by your local authority, then we would be pleased to ship you them.

FIG. 4

MULTIPLE NOZZLE HEADS

The A.T. Temp Desuperheater may be equipped with a variety of spray heads.
The option to have the spray cylinder heads with a wide range of L_1/L_2 values. Standard configurations are also offered for frequently used spray nozzles and combinations are available.
This feature enables the A.T. Temp Desuperheater to be customized to specific system requirements. Consult Yarway in your local representative for details.

The Yarway Heavy Duty A.T. Temp Desuperheater, a specifically designed for use as a reduced High pressure steam applications. The fabricated cylindrical shape makes it easily adaptable to most various boiler codes and meet all specifications. The unit can also be used as a liquid mix gas injector for which high grade stainless steel as stainless steel is often used. The internal components are identical to those used in Yarway Standard Duty A.T. Temp Desuperheater.
More than 3000 units in steam heavy - and Standard Duty A.T. Temp Desuperheaters are in service today. The nozzle stem is normally taken a hardness of Rc 15 L_2. This highly finished surface is then intended to give a hardness of - 1000 Brinell. The combination of these processes improves seating tightness, which reduces seating factor. Pilot rings are specially hardened and subsequently ground and are provided with a special gas tight cast.
These rings offer excellent running properties and enable service life L_1 R_2 values are now as 5,000 is stock.

SYSTEM COMPARISON

Conventional

Conventional injection water systems consist of:
- Fixed size spray nozzle
- Control valve
- Steam pipe section

The water injection quantity is regulated by the control valve. As a consequence of this flow injection the downstream nozzle pressure P2, varies as a function of the valve stem position as indicated mapping the control valve curve in relation reducing P2 and hence the available water is inlet. Δp - resulting in larger droplet size and water accumulation. The water injection rate causes steam and temperature vector becomes multivariate. This higher system problem. Moreover, compromises, inserts and seals are usually sized for the design capacity but normally operate significantly below these design conditions. The overriding result is a particular part control valve, even at normal operating conditions. With reducing load, downstream water pressure P2 drops rapidly resulting in larger droplet size. Conventional systems therefore not work satisfactorily under partial loads conditions. Improvement of this performance is reached by applying Venturi type injection systems. Yarway has for such conditions, a Venturi type Desuperheater available and more information is contained in a separate brochure.

A.T. - Temp Desuperheater

The A.T. Temp Desuperheater valve regulates the amount of injection water by varying the number of injection nozzles. This maintains the water pressure to remain constant independently of the number of injection nozzles in operation. This results in an excellent and near uniform turbulent droplet over the entire operating range. Control of nozzle opening is achieved by the positioning of a piston which is operated directly by an actuator mounted onto the valve. Through this simple design, there is no separate water control valve necessary.

FIG. 2

FIG. 3

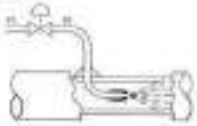

APPLICATIONS

Yarway A.T. Temp Desuperheaters are used for temperature control in:
- Boiler superheaters
- Boiler reheaters
- Turbine bled steam
- Pressure reducing valve outlet steam
- Process steam
- Process gases

Size		A.T. Temp Desuperheater capacity range						Dimensions
18	4b	L_1=1.270	L_2=1.524	16	L_1=1.016	L_2=1.270		
	6b	L_1=1.397	L_2=1.746	16	L_1=1.270	L_2=1.524		
	7	L_1=1.397	L_2=1.651	16	L_1=1.143	L_2=1.397		
	8	L_1=1.524	L_2=1.651	16	L_1=1.397	L_2=1.524		
	8b	L_1=1.524	L_2=1.651	16	L_1=1.524	L_2=1.651		
28	8	L_1=1.905	L_2=2.286	16	L_1=1.524	L_2=1.651		
	8b	L_1=1.905	L_2=2.286	16	L_1=1.905	L_2=2.032		
	9	L_1=2.032	L_2=2.540	16	L_1=2.032	L_2=2.286		
	9b	L_1=2.032	L_2=2.540	16	L_1=2.032	L_2=2.286		
	10	L_1=2.286	L_2=2.921	16	L_1=2.286	L_2=2.540		
	11	L_1=2.540	L_2=3.175	16	L_1=2.540	L_2=2.921		
	14	L_1=3.683	L_2=4.826	16	L_1=3.302	L_2=3.556		
	16	L_1=4.445	L_2=5.588	16	L_1=3.937	L_2=4.445		

$$R_T = \Omega \sqrt{\frac{\rho_1 \rho_2}{\Delta p}}$$

R_T = m/s
Ω = kg/m²
Δp = bar

Flow capacity limitations are:

- Water (diffuser) a maximum water flow capacity of 30 m/s. A minimum velocity
- Water (diffuser) a maximum water flow capacity of 30 m/s. A minimum velocity

FIG. 5

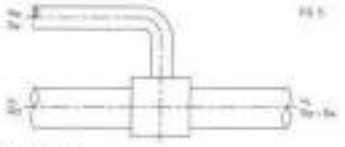

SIZING FORMULA

Every Desuperheating station is a mixing point where there is a heat and mass balance.
The universal formula is:

$$Q_w \times h_w + Q_s \times h_s = Q_m \times h_m$$

In which:
Q_w = Injection water mass
Q_s = Main steam mass
H_s = Enthalpy of the inlet steam
H_m = Enthalpy of the outlet steam
H_w = Enthalpy of the injection water

This formula enables calculation of the quantity of water required to lower the inlet steam temperature to the desired temperature at the outlet steam.

IMPORTANT SYSTEM PARAMETERS

Apart from the spray quality of the activation (pitting attributes) there are other system parameters which influence the Desuperheater pressure performance. These are:

Inlet steam velocity

At high steam velocities, water droplets are easily dislodged. This factor is particularly of the overall atomization quality (secondary atomization). The minimum acceptable steam velocity varies as a function of the nozzle size and pipe diameter. In case of doubt consult Yarway.

Water to steam ratio

This ratio is calculated by dividing Q_w by Q_s. For operation steam pressures below 10 bar this ratio should not exceed 10% in the normal operating conditions. Systems operating between 10 and 20 bar can have a ratio of up to 15%. For higher pressure boiler, consult Yarway.

Distance to sensor

The distance from the injection point to the temperature sensor should be 12 to 15 meters. Systems operating at pressures above 20 bar can have significantly less or no this distance. Consult Yarway.

Required straight pipe run

The distance from injection point to the first pipe bend is also a function of steam pressure, temperature and nozzle size. Experience has shown that a distance up to 6 meter, i.e. 6 meters is an acceptable distance.

APPLICATIONS

Pneumatic diaphragm

The Yarway Pneumatic actuators are spring-loaded, designed for force-over-travel control and are suitable for use in low - medium - and high pressure steam applications. The actuator models, 20-28 for a stroke of 38 mm and 30-40 for a stroke of 70 mm are suitable for operation under severe environmental conditions, e.g. at low or high ambient temperatures. The actuator can fail valve in the closed position in the event of air failure.

Other proprietary makes, and/or special requirements are available upon request. Valve positioners are available in analogue or digital - pneumatic operation depending upon customer preference. Additional options are for manual handwheel operations and limit switches.

FIG. 6

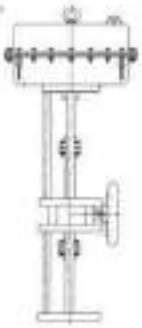

FIG. 7

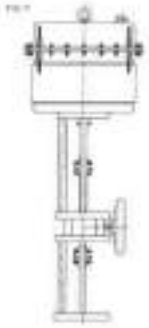

ELECTRIC ACTUATORS

Because of the adaptive trim control on the A.T. Temp Sensopilot heater, can be equipped with Sole linear electric actuators.

Each actuator - valve assembly is fully factory assembled and Yarway tested.
A functional test certificate is issued for all valves supplied.

FIG. 8

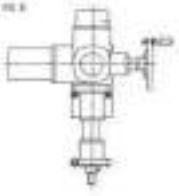

FIG. 9

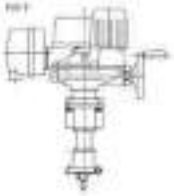

CONTROL OVERVIEW

The injection water quantity is controlled as a function of the outlet steam temperature. The A.T. Temp Sensopilot heater can also be equipped with Sole linear electric actuators.

Control systems are compatible with conventional control systems operated from temperature transmitters, temperature indicating controllers and recorders. Fully pneumatic or fully electric systems are compatible and also combinations of the two. Exact requirements for outlet specifics in the steam by having demonstration of standard data.

FIG. 10

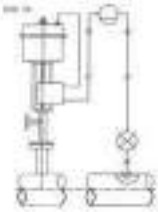

APPLICATIONS AND SIZING

The valve sizes for the Heavy Duty A.T. Temp Sensopilot heater are determined as the following, as that:

Model 18/54: P water = (p1 - 100) - (p2 x 0.7) water in kg/cm²
The maximum steam force must be limiting 18 t/h

Model 28/64: P water = (p1 - 100) - (p2 x 0.7) water in kg/cm²
The maximum steam force must be limited to 30 t/h

Special care should be taken when valve is positioned in open. By the movement of valve stem actuator's assignments, care is necessary for controlling the specified normalization force during short intervals. Yarway supplies type of valve control coupling for such applications.

Actuator sizing formula

Units:
d seat - in cm
d stem - in cm
S - in cm
P water - in bar

$F1 = (d \text{ seat}^2 - d \text{ stem}^2) \times P \text{ water}$
$F2 = (d \text{ seat}^2) \times P \text{ water}$
$F3 = P \text{ water} \times (F \text{ stem} + S \text{ or } 1)$

FIG. 11

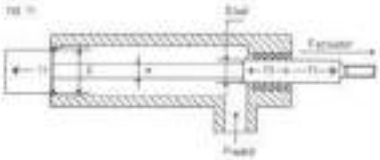

DESIGN / SIZING DATA

Steam Sensopilot heaters are selected specifically against application data. For optimal sizing, the following comprehensive data should always be supplied:

Steam data
Inlet pressure - bar
Steam temperature - °C
Dryness at inlet steam - % vapour
Steam flow max - t/h
Steam flow normal - t/h
Steam flow min - t/h

Water data
Water pressure - bar
Water temperature - °C

Material
Pipe size - mm
Pipe schedule
Required outlet flange
Location - DN or ASA etc
If a mechanical valve is chosen, specify the required:
Turndown ratio - x :

Otherwise the set, because base selection of typical control heater which provides valve series. Sensopilot control, a maximum split is a 9 equally standard series giving turndown ratios of 16:1 and 25:1 means many in the steam flow range. Experienced users find the major for supplying valve within the range.

FIG. 12 Water Spray positions

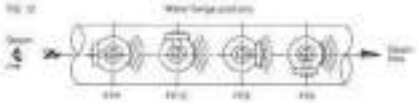

Spray water must be injected in the direction of the steam flow. To facilitate installation of the water supply line, a different range of spray nozzles are available in relation to the steam connecting flange. Specification of the spray nozzle is based on requirement with the ordering data.

Spray pressure requirements are a function with a minimum of approx. 10 kg/cm² water required in the water supply line to ensure the A.T. Temp Sensopilot heater from clogging.

TABLE 1 - STANDARD MATERIALS

Item	Part	Material	Standard
1	Spray nozzle assembly	AISI 316 / Inconel 718	Yarway
2	Piston ring	AISI 420 *	Yarway *
3	Piston	AISI 420 *	Yarway *
4	Condition ring	Inconel 718	Yarway
5	Seat	Stellite 6	Stellite 6
6	Stem	AISI 420 *	Yarway *
7	Plug	Series Cut	Yarway
		18/54: F.C.D.	Yarway
		18/54: Inc.	Yarway
10	Water flange	18/54: F.C.D.	Yarway
		28/64: Inc.	Yarway
		28/64: Inc.	Yarway
11	Spacer	AISI 420 *	Yarway *
12	Nut	AISI 420	Yarway
13	Packing set	Graphite	Graphite
14	Stem	AISI 304	Yarway
17	Shaft	AISI 420 **	Yarway **
18	Plate	AISI 304	Yarway
19	Name plate	SS	SS
20	Nut	C. steel	C. steel
21	Locking bolt (nut)	C. steel	C. steel
23	Bleeding washer	Steel	Steel
24	Nut	Carbon steel	Carbon
30	Handle	Stainless	Stainless
31	Nut	AISI 304	Yarway

NOTE
* Stellite
Other materials are available upon request

Certification:
A.T. Temp Sensopilot heaters are supplied with a certificate that the valve is in accordance the requirements of ASME B16.34 and B16.5/B16.

All data subject to change.

Water tap and valve if not supplied, may deviate from the enclosure.
Please consult with Yarway in case of doubt.

FIG. 13

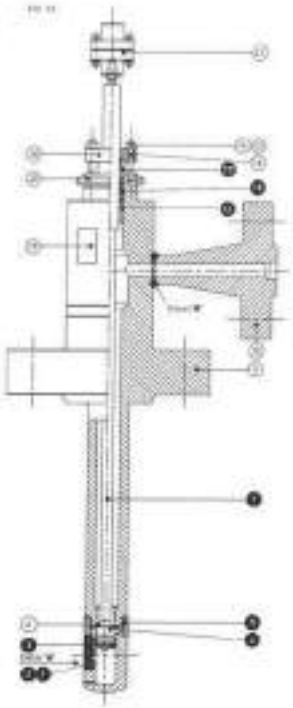

Detail "A"

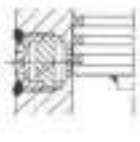

** Detail "B"
Flange connection for Inside Sole

● Recommended spares

TABLE 2 - DIMENSIONS (mm)

	Model 18/54 Steam = 20 t/h	Model 28/64 Steam = 30 t/h
A	4 through 18	4 through 24
B	4 through 18	4 through 24
C	4 through 18	4 through 24
D	4 through 18	4 through 24
E	4 through 18	4 through 24
F	4 through 18	4 through 24
G	18	18
H	27	27
I	32	32
J	18 x 1 x 70	18 x 1 x 90
K	M8 x 1 x 30	M10 x 1 x 30
M	8 - 10 - 12	8 - 10 - 12
L	Depending on nominal size, 150	Depending on nominal size and rating 250
Material	AISI	AISI
N	18.5 x 0.5 *	23.5 x 0.5 **
O	Steel	Steel

NOTE
Other dimensions are available on request and are subject to change without notice. Yarway will provide a certified dimensional drawing upon request.

* Model 18/54 only
** Model 28/64 only

TABLE 3 - FLANGE CONNECTIONS

	Model 18/54 Steam = 20 t/h		Model 28/64 Steam = 30 t/h	
Steam flange	ASTM	Class 150	ASTM	Class 150
		Class 300		Class 300
		Class 600		Class 600
	DIN	PN 16	DIN	PN 16
		PN 40		PN 25
		PN 100		PN 100
		PN 160		PN 160
Water flange	ASTM 1 - 1/4		ASTM 1 - 1	
	DIN 25 - 40		DIN 40 - 50 - 65	
	Pressure rated as per customer specification		Pressure rated as per customer specification	

NOTE
Other optional flanges upon request

Weight
- 18 mm for model A - B - C - D - E
  Incl. steam flange of 100 kg
- 18 mm for model F - I - J - K - L
  Incl. steam flange of 90 kg

FIG. 14

PENTAIR

PENTAIR VALVES & CONTROLS

PENTAIR

Global Projects

Document Summary

15-Aug-2017

Page 1 of 3

Customer / End-User	VOGT Power International
Project Name:	V17491
Customer Purchase Order:	V0010364
Pentair Sales Order:	7367601

Pentair Document Number:	7367601-C08-002
Vogt Document Number:	-
Document Description:	Data Sheets
Drawing Number:	-
Revision:	0
Item No.:	13
Tag Number(s):	51HAH10AC001 52HAH10AC001

Notes:

VOGT POWER INTERNATIONAL
V17491-ICXL-625-00
25-Aug-2017

PENTAIR

Client: Vogt Power
Client ref: V17491 AMATA ABPR5
PO: V0010364
Vendor ref: 7367601
Pentair sales office: Pasadena, TX
Pentair Sales office ref: 1962341

51HAH10AC001 I 52HAH10AC001

A.T.- TEMP DESUPERHEATER VALVE, FORGED

BODY DESIGN / MODEL:	AT18
HAVING BODY MATERIAL:	A182-F22
STEAM CONNECTION:	FLANGED ASME 3.0" - 1500#
FACING STEAM FLANGE:	RAISED FACE (Ra 3.2 – 6.3 µm)
WATER CONNECTION:	FLANGED ASME 1.0" - 1500#
FACING WATERFLANGE:	RAISED FACE (Ra 3.2 – 6.3 µm)
DISTANCE C/L BODY TO FACE WATERFLANGE:	150 mm
DISTANCE FACE STEAM FLANGE TO C/L WATERFLANGE:	200 mm
SEAT:	STELLITE 6
INTERNALS:	STAINLESS STEEL
NOZZLE HEAD:	9C WITH STELLITE 6 NOZZLES
NOZZLEHEAD MAT.:	AISI410
Kvs SELECTED:	0.3942
DISTANCE C/L NOZZLE TO FACE STEAMFLANGE:	380 mm
STROKE:	55 mm
PAINTING:	RUST-OLEUM 7715

CERTIFICATION PER QUALITY PLAN AT03, CERT. TO EN 10204/3.1 INCLUDED

ACTUATOR:	NARVIK 20-55 + SIDEM.HW + YOKE
SPRING RANGE:	1.0 - 3.8 BAR
FORCE:	11.0 kN
ACTION:	EXTENDS WITH AIR PRESSURE
YOKE:	CARBON STEEL ZINC PLATED
AIR CONNECTION:	1/2" NPT (female)
AIR SUPPLY:	MAX. *6.0* BAR

IN CASE OF AIRFAILURE: VALVE CLOSES BY SPRING RETURN

ASSEMBLE WITH HY-LOK COUPLINGS AND STAINLESS STEEL PI PING

POSITIONER:	SIEMENS SIPART PS2
BODY MATERIAL:	MACROLON
COMMUNICATION:	HART
PROTECTION:	IP65/NEMA 4x
MOUNTING:	LINEAR ACTUATOR
INPUT SIGNAL:	4-20 mA
AIRSUPPLY:	MAX. 7 BAR
AIR CONNECTION:	1/4" NPT
CABLE ENTRY:	M20 X 1.5
IN CASE OF AIR FAILURE:	ACTUATOR STEM RETRACTS BY SPRINGRETURN
LABELING:	ENGLISH
INCL.:	POSITION FEEDBACK MODULE

AIRFILTER:	FILTER REGULATOR AFR 100
BODY MATERIAL:	DIE CAST ALUMINIUM
RANGE:	0 - 100 Psi (0 – 7.0 BAR)
FILTER ELEMENT:	STAINLESS STEEL / 8 mu
AIR SUPPLY:	MAX. 245 Psi (17.0 BAR)
PNEUM. CONNECTIONS:	1/4 " NPT FEMALE

OPERATION
&
MAINTENANCE MANUAL

For

Vogt Power International Inc.
Heat Recovery Steam Generators

For

ABPR5 Combined Cycle Cogeneration Plant Project
Amata B. Grimm Power (Rayong) 5 Limited

Vogt Power Project No. 17491

Vogt Power Document No. V17491-OMNE-004

VOLUME 4

OPERATION & MAINTENANCE MANUAL

OPERATION AND MAINTENANCE MANUAL
13551 TRITON PARK BLVD, SUITE 2000
LOUISVILLE, KENTUCKY 40223 USA

This document contains minimum procedures for operating and maintaining the HRSG components and is intended to assist the operators in planning and scheduling operational and maintenance activities. It is not intended to and does not cover all details or variations in equipment, or provide for every possible contingency.

OPERATION AND MAINTENANCE MANUAL
13551 TRITON PARK BLVD, SUITE 2000
LOUISVILLE, KY 40223 USA

INDEX

VOLUME 1 – Vogt Power HRSG O&M Manual

SECTION I DESIGN DATA

SECTION II OPERATIONAL PROCEDURES

SECTION III COMMISSIONING PROCEDURES

OPERATION AND MAINTENANCE MANUAL
13551 TRITON PARK BLVD, SUITE 2000
LOUISVILLE, KY 40223 USA

SECTION IV SUBVENDOR MANUALS

Volume 2 – Divert Damper

Volume 3 – Valves and Inline Components

Volume 4 – Instrumentation

Volume 5 – Deaerator & Heat Exchanger

Volume 6 – Miscellaneous Equipment

Contents

Figures v

Tables vi

1. Introduction 1
General Description 1
Reference Documents 1
Transmitter Identification 3
Standard Specifications 5
Product Safety Specifications 10
ATEX and IECEx Warnings 13
ATEX Compliance Documents 13
IECEx Compliance Documents 14

2. Installation 15
Transmitter Mounting 15
Process Mounting 15
Manifold Mounted Transmitter 17
Transmitter Mounted on a Coplanar‰ Manifold 18
Pipe or Surface Mounting 18
Standard Mounting Bracket 18
Universal Mounting Bracket 20
Venting and Draining 23
Traditional Structure 23
LP1 Low Profile Structure 23
LP2 Low Profile Structure 24
Installation of Flow Measurement Piping 24
Filling System with Seal Liquid 27
Positioning the Housing 28
Positioning the Display 28
Setting the Write Protect Jumper 29
Cover Locks 29
Wiring 29
Accessing Transmitter Field Terminals 30
Wiring the Transmitter to a Control Loop 30
Multidrop Communication 33
Connecting the Transmitter to an I/A Series System 34
Putting a Differential Pressure Transmitter Into Operation 35
Taking a Differential Pressure Transmitter Out of Operation 35

3. Operation Via Local Display 37
Entering Numerical Values 38
Reranging 39
Viewing the Database 39
Viewing the Pressure Range 39
Testing the Display 39
Error Messages 40

4. Calibration 41
General Calibration Notes 41
Calibration Setup 43
Setup of Electronic Equipment 44
Field Calibration Setup 44
Bench Calibration Setup 45
Calibration Using a PC20 46
Calibration Using a PC50 46
Calibration Using a HART Communicator 46
Calibration Using the Optional Local Display 46
Zero Adjustment Using External Zero Button 49
Error Messages 51

5. Configuration 53
Configurable Parameters 53
Configuration Using a PC20 54
Configuration Using a PC50 54
Configuration Using a HART Communicator 54
Configuration Using the Optional Local Display 54
Character Lists 64
Error Messages 65

6. Maintenance 67
Error Messages 67
Parts Replacement 67
Replacing the Terminal Block Assembly 67
Replacing the Electronics Module Assembly 68
Removing and Reinstalling a Housing Assembly 69
Adding the Optional Display 70
Replacing the Sensor Assembly 70
Rotating Process Covers for Venting 72

Index 75

Figures

1 Transmitter Identification 3
2 Top Level Structure Diagram 4
3 Minimum Allowable Absolute Pressure vs. Process Temperature with Fluorinert Fill Fluid 7
4 Typical Mounting of an IDP10 Transmitter Supported by Process Piping 16
5 Typical Mounting of an IDP10 Transmitter Supported by a Bypass Manifold 17
6 Typical Mounting of IDP10 Transmitter on Coplanar Manifold 18
7 Pipe or Surface Mounted Transmitter Using a Standard Bracket 19
8 Examples of Mounting With a Standard Bracket 19
9 Details of a Universal Bracket 20
10 Mounting a Transmitter with Traditional Structure Using a Universal Bracket 21
11 Vertical Pipe Mounting a Transmitter with LP2 Structure Using a Universal Bracket 21
12 Horizontal Mounting a Transmitter with LP2 Structure Using a Universal Bracket 22
13 Vertical Mounting - Cavity Draining 23
14 Vertical Mounting - Cavity Venting 23
15 Horizontal Mounting - Cavity Venting 23
16 Vertical Mounting - Cavity Venting 24
17 Horizontal Mounting - Cavity Venting and Draining 24
18 Cavity Venting and Draining 24
19 Example of Horizontal Process Line Installation 26
20 Example of Vertical Process Line Installation 27
21 Housing Screw or Clip Location 28
22 Cover Lock Location 29
23 Accessing Field Terminals 30
24 Identification of Field Terminals 30
25 Supply Voltage and Loop Load 31
26 Loop Wiring Transmitters 33
27 Wiring Several Transmitters to a Common Power Supply 33
28 Typical Multidrop Network 34
29 Local Display Module 37
30 Top Level Structure Diagram 38
31 Display Test Segment Patterns 40
32 4 to 20 mA Output Calibration Setup of Electronic Equipment 44
33 Field Calibration Setup 45
34 Bench Calibration Setup 46
35 Calibration Structure Diagram 48
36 Calibration Structure Diagram (Continued) 49
37 Configuration Structure Diagram 57
38 Configuration Structure Diagram (Continued) 58
39 Configuration Structure Diagram (Continued) 59
40 Replacing the Electronics Module Assembly and Display 69
41 Replacing the Sensor Assembly 71
42 Replacing the Sensor Assembly (pvdf Inserts) 72
43 Sensor Cavity Venting and Draining 72

Tables

1 Reference Documents 1
2 Minimum Loop Load and Supply Voltage Requirements 9
3 Electrical Safety Specifications 12
4 Operation Error Messages 40
5 Calibration Menu 47
6 Calibration Error Messages 51
7 IDP10-T Configurable Parameters 53
8 Configuration Menu 55
9 Alphanumeric Character List 64
10 Numeric Character List 64
11 Configuration Error Messages 65

1. Introduction

General Description

The IDP10-T intelligent differential pressure transmitters measure the difference between two pressures applied to opposite sides of a silicon strain gauge microsensor within the sensor assembly. This microsensor converts differential pressure to a change in resistance. The resistance change is then converted to a 4 to 20 mA or digital signal proportional to differential pressure or to the square root of differential pressure. This measurement signal is transmitted to remote receivers over the same two wires that supply power to the transmitter electronics. These wires also carry two-way data signals between the transmitter and remote communication devices.

The transmitter allows direct analog connection to common receivers while still providing full Intelligent Transmitter Digital Communications using a HART Communicator.

The transmitter is often used for measuring fluid flow rates across a primary device such as an orifice plate, but can also be used for other types of differential pressure measurements such as liquid level, interface level, or density measurements. The IDP10 can also be supplied with direct connected or remote pressure seals to isolate the measuring element from corrosive or viscous fluids.

For more detailed information on the principle of operation of the transmitter, refer to document TI 037-096, available from Invensys.

Reference Documents

Table 1. Reference Documents

Document	Description
Dimensional Prints	
DP 020-342	Dimensional Print – PSFLT Pressure Seals
DP 020-343	Dimensional Print – PSFPS and PSFES Pressure Seals
DP 020-345	Dimensional Print – PSFAR Pressure Seals
DP 020-347	Dimensional Print – PSTAR Pressure Seals
DP 020-349	Dimensional Print – PSISR Pressure Seals
DP 020-351	Dimensional Print – PSSCR Pressure Seals
DP 020-353	Dimensional Print – PSSCT Pressure Seals
DP 020-354	Dimensional Print – PSSSR Pressure Seals
DP 020-355	Dimensional Print – PSSST Pressure Seals
DP 020-446	Dimensional Print – IDP10, IDP25, and IDP50 Differential Pressure Transmitters
DP 022-335	Dimensional Print – Model CO Compact Orifice
Parts Lists	
PL 006-172	Parts List – Model CO Compact Orifice

Table 1. Reference Documents (Continued)

Document	Description
PL 009-005	Parts List – IDP10 Differential Pressure Transmitter
Instructions	
MI 020-328	Instruction – Bubble Type Installation for Liquid Level
MI 020-329	Instruction – High Accuracy Flow Measurement
MI 020-366	Instruction – I/A Series Intelligent Pressure Transmitters Operation, Configuration, and Calibration Using a HART Communicator
MI 020-369	Instruction – Pressure Seals
MI 020-427	Instruction – Intrinsic Safety Connection Diagrams and Nonincendive Circuits
MI 020-495	Instruction – PC20 Intelligent Transmitter Configurator
MI 020-501	Instruction – PC50 Intelligent Field Device Tool (Installation and Parts List)
MI 020-505	Instruction – PC50 Intelligent Field Device Tool (Operation Using HART Protocol)
MI 020-520	Instruction – PC50 Intelligent Field Device Tool with Advanced DTM Library (Operation Using HART Protocol)
MI 022-138	Instruction – Bypass Manifolds - Installation and Maintenance
MI 022-335	Instruction – Model CO Compact Orifice
Technical Information	
TI 1-50a	Technical Information – Liquid Density Measurement
TI 001-051	Technical Information – Liquid Interface Measurement
TI 001-052	Technical Information – Liquid Level Measurement
TI 37-75b	Technical Information – Transmitter Material Selection Guide
TI 037-097	Technical Information – Process Sealing of I/A Series Pressure Transmitters for use in Class 1, Zone 0, 1, and 2 Hazardous Locations

Transmitter Identification

See Figure 1 for transmitter data plate contents. For a complete explanation of the Model Number code, see the parts list. The firmware version is identified on the top line of the display when **VIEW DB** (View Database) is selected in the top level structure (see Figure 2).

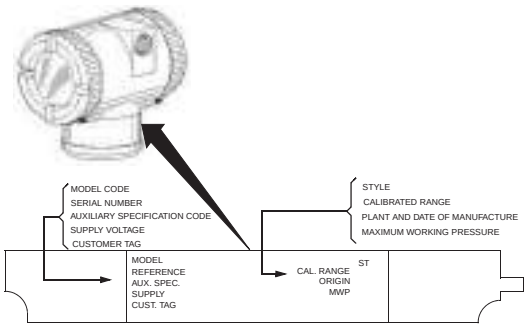

Figure 1. Transmitter Identification

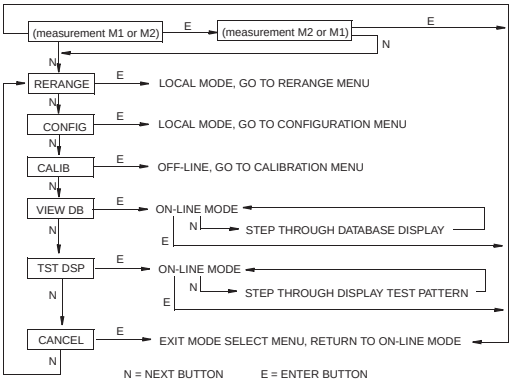

Figure 2. Top Level Structure Diagram

Standard Specifications

Operative Limits

Influence	Operative Limits
Sensor Body Temperature[a] Silicone Fill Fluid Fluorinert Fill Fluid pvdf Inserts	 -46 and +121°C (-50 and +250°F) -29 and +121°C (-20 and +250°F) -7 and +82°C (20 and 180°F)
Electronics Temperature With LCD Display	-40 and +85°C (-40 and +185°F) -40 and +85°C (-40 and +185°F)[b]
Relative Humidity	0 and 100%
Supply Voltage	11.5 and 42 V dc
Output Load[c]	0 and 1450 ohms
Mounting Position	No Limit
Vibration	6.3 mm (0.25 in) double amplitude from 5 to 15 Hz with aluminum housing and from 5 to 9 Hz with 316 ss housing. 0 to 30 m/s (0 to 3 "g") from 15 to 500 Hz with aluminum housing and 0 to 10 m/s (0 to 1 "g") from 9 to 500 Hz with 316 ss housing.

(a) Refer to MI 020-369 for temperature limits with pressure seals.

(b) Display updates are slowed and readability decreased at temperatures below -20°C (-4°F).

(c) 250 Ω minimum load is required for communication with a HART Communicator.

Span and Range Limits

Span Limit Code	Span Limits ΔP	Range Limits ΔP [a]
A[b]	0.12 and 7.5 kPa 0.5 and 30 inH_20 12 and 750 mmH_20	-7.5 and +7.5 kPa -30 and +30 inH_20 -750 and +750 mmH_20
B	0.87 and 50 kPa 3.5 and 200 inH_20 87 and 5000 mmH_20	-50 and +50 kPa -200 and +200 inH_20 -5000 and +5000 mmH_20
C	7.0 and 210 kPa 28 and 840 inH_20 2.3 and 69 ftH_20	-210 and +210 kPa -840 and +840 inH_20 -69 and +69 ftH_20
D	0.07 and 2.1 MPa 10 and 300 psi 23 and 690 ftH_20	-0.21 and +2.1 MPa -30 and +300 psi -69 and +690 ftH_20
E	0.7 and 21 MPa 100 and 3000 psi	-0.21 and +21 MPa -30 and +3000 psi

(a) Negative values of differential pressure indicate a higher pressure on the **low side** of the sensor. Positive values indicate a higher pressure on the **high side** of the sensor.

(b) Span Limit Code "A" not available with pressure seals.

Maximum Static, Overrange, and Proof Pressure

Transmitter Configuration (Bolting Material)[c]	Maximum Static and Overrange Pressure Rating[a,e,f]		Proof Pressure Rating[b]	
	MPa	Psi	MPa	Psi
Standard (B7 steel), Option "-B2" (17-4 PH ss), Option "-D3" or "-D7"	25	3625	100	14500
Option "B1" (316 ss) or Option "-D5"	15	2175	60	8700
Option "B3" (B7M)	20	2900	70	11150
Option "-D1"	16	2320	64	9280
Option "-D2", "-D4", "-D6", or "-D8"[d]	10	1500	40	6000
Option "-D9" (17-4 PH ss)	40	5800	100	14500

(a) Either side can be at higher pressure during overrange.

(b) Meets ANSI/ISA Standard S82.03-1988.

(c) -D1 = DIN Single ended process cover with M10 B7 bolting.
-D2 = DIN Double ended process cover with M10 B7 bolting
-D3 = DIN Single ended process cover with 7/16 in B7 bolting.
-D4 = DIN Double ended process cover with 7/16 in B7 bolting.
-D5 = DIN Single ended process cover with 7/16 in 316 ss bolting.
-D6 = DIN Double ended process cover with 7/16 in 316 ss bolting.
-D7 = DIN Single ended process cover with 7/16 in 17-4 ss bolting.
-D8 = DIN Double ended process cover with 7/16 in 17-4 ss bolting
-D9 = DIN Single ended process cover with 7/16 in 17-4 ss bolting.

(d) Limited to operating temperatures ranging from 0 to 60°C (32 to 140°F).

(e) When Structure Codes 78/79 are used (pvdf inserts in the Hi and Lo side process covers), the maximum overrange is 2.1 MPa (300 psi) and temperature limits are -7 and +82°C (20 and 180°F).

(f) Static pressure rating of 40 MPa (5800 psi) with Option Code -Y.

NOTE

Static pressure zero shift for all calibrated spans can be eliminated by readjusting the zero output at nominal operating static pressure.

⚠ CAUTION

1. Exceeding the maximum overrange pressure can cause damage to the transmitter degrading its performance.
2. The transmitter could be nonfunctional after application of the proof pressure.

Elevated Zero and Suppressed Zero

For applications requiring an elevated or suppressed zero, the maximum span and the upper and lower range limits of the transmitter can not be exceeded.

Sensor Fill Fluid

Silicone Oil (DC 200) or Fluorinert (FC-43)

Minimum Allowable Absolute Pressure vs. Process Temperature

With Silicone Fill Fluid: At full vacuum: Up to 121°C (250°F)
With Fluorinert Fill Fluid: Refer to Figure 3.

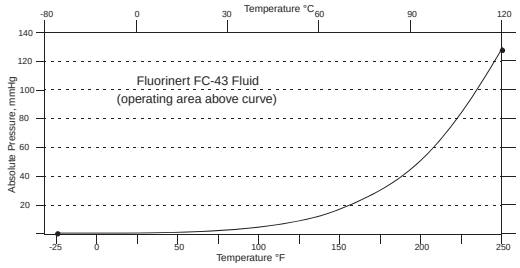

Figure 3. Minimum Allowable Absolute Pressure vs. Process Temperature with Fluorinert Fill Fluid

Mounting Position

The transmitter can be mounted in any orientation. It can be supported by the process piping. It can also be mounted directly to a vertical or horizontal pipe or surface mounted using an optional mounting bracket. The housing can be rotated up to one full turn to any desired position for access to adjustments, display, or conduit connections. See "Positioning the Housing" on page 28. The display (if present) can also be rotated in the housing to any of four different positions at 90° increments. See "Positioning the Display" on page 28.

NOTE

Position effect zero shift for all calibrated spans can be eliminated by readjusting zero output after installation.

Approximate Mass

Without Process Connectors	3.5 kg (7.8 lb)
With Process Connectors	4.2 kg (9.2 lb)
With Optional 316 ss Housing	Add 1.1 kg (2.4 lb)
With Pressure Seals	Varies with seal used

Process Connections

IDP10 transmitters are connected to the process via a 1/4 NPT thread or any one of a number of optional process connectors.

Process Wetted Materials

Diaphragm: 316L ss, Co-Ni-Cr, Hastelloy C, Monel, gold plated 316L ss, or tantalum
Covers and Process Connections: 316 ss, carbon steel, Hastelloy C, Monel, or pvdf inserts
Pressure Seals: Refer to MI 020-369

Process Pressure and Temperature Limits for Pressure Seals

Refer to MI 020-369

Electrical Connections

Field wires enter through 1/2 NPT, PG 13.5, or M20 threaded entrances on either side of the electronics housing. Leads terminate under screw terminals and washers on the terminal block in the field terminal compartment. To maintain RFI/EMI, environmental, and explosionproof ratings, unused conduit connection must be plugged with metal plug (provided), inserted to five full threads for 1/2 NPT connections; seven full threads for M20 and PG 13.5 connections.

Field Wiring Reversal

Accidental reversal of field wiring will not damage the transmitter, provided the current is limited to 1 A or less by active current limiting or loop resistance. Sustained currents of 1 A will not damage the electronics module or sensor but could damage the terminal block assembly and external instruments in the loop.

Adjustable Damping

The transmitter response time is normally 1.0 second or the electronically adjustable setting of 0.00 (none), 0.25, 0.50, 1, 2, 4, 8, 16, or 32 seconds, whichever is greater, for a 90% recovery from an 80% input step as defined in ANSI/ISA S51.1.

Output Signal

4 to 20 mA dc linear or 4 to 20 mA dc square root; software selectable. The output is remotely configurable from the HART Communicator and locally configurable with the pushbuttons on the display.

NOTE
Only 4 to 20 mA linear output on absolute pressure, gauge pressure, and flange level transmitters.

Zero and Span Adjustments

Zero and span are adjustable from the HART Communicator. They are also adjustable at the transmitter using the display. An optional external self-contained moisture sealed pushbutton assembly allows local resetting of zero without removing the housing cover.

Power-up Time

Less than 2.0 seconds for output to reach the first valid measurement, then at the electronic damping rate to reach the final measured variable value.

Supply Voltage

Power supply must be capable of providing 22 mA when the transmitter is configured for 4 to 20 mA output. Ripple of up to 2 V pp (50/60/100/120 Hz) is tolerable, but instantaneous voltage must remain within specified range.

The supply voltage and loop load must be within specified limits. This is explained in detail in "Wiring" on page 29. A summary of the minimum requirements is listed in Table 2.

Table 2. Minimum Loop Load and Supply Voltage Requirements

	HART Communication	No HART Communication
Minimum Resistance	250 Ω	0
Minimum Supply Voltage	17 V	11.5 V

Electrical Ground Connections

The transmitter is equipped with an internal ground connection within the field wiring compartment and an external ground connection at the base of the electronics housing. To minimize galvanic corrosion, place the wire lead or contact between the captive washer and loose washer on the external ground screw. If shielded cable is used, earth (ground) the shield at the field enclosure **only**. Do **not** ground the shield at the transmitter.

HART Communicator Connection Points

The HART Communicator can be connected in the loop as shown in "Wiring" on page 29. It can also be connected directly to the transmitter at the two upper banana plug receptacles.

Test Points

The two lower banana plug receptacles (designated **CAL**) can be used to check transmitter output when configured for 4 to 20 mA. Measurements should be 100-500 mV dc for 0-100% transmitter output.

Remote Communications

The transmitter communicates bidirectionally over the 2-wire field wiring to a HART Communicator. The information that can be continuously displayed is:

- Process Measurement (expressed in one or two types of units)
- Transmitter Temperature (sensor and electronics)
- mA Output (equivalent)

The information that can be remotely displayed and reconfigured includes:

- Output in Percent Flow (square root) or Pressure Units (linear). Percent Display in Linear mode on local display is also supported.
- Zero and Span, including reranging
- Zero Elevation or Suppression

- Linear Output or Square Root Output (in some models)
- Pressure or Flow Units (from list provided)
- Temperature Sensor Failure Strategy
- Electronic Damping
- Poll Address (Multidrop mode)
- External Zero (Enable or Disable)
- Failsafe Direction
- Tag, Description, and Message
- Date of Last Calibration

Communications Format

Communication is based upon the FSK (Frequency Shift Keying) technique. The frequencies are superimposed on the transmitter power/signal leads.

4 to 20 mA Output

The transmitter sends its differential pressure measurement to the loop as a continuous 4 to 20 mA dc signal. It also communicates digitally with the HART Communicator at distances up to 3000 m (10 000 ft). Communication between the remote configurator and the transmitter does not disturb the 4 to 20 mA output signal. Other specifications are:

Data Transmission Rate:	1200 Baud
4 - 20 mA Update Rate:	30 times/second
Output when Fail Low:	3.60 mA
Output when Fail High:	21.00 mA
Output when Underrange	3.80 mA
Output when Overrange	20.50 mA
Output when Offline:	User configurable between 4 and 20 mA

Product Safety Specifications

DANGER
To prevent possible explosions and to maintain flameproof, explosionproof, and dust-ignitionproof protection, observe applicable wiring practices. Plug unused conduit opening with the provided metal pipe plug. Both plug and conduit must engage a minimum of five full threads for 1/2 NPT connections; seven full threads for M20 and PG 13.5 connections.

WARNING
To maintain IEC IP66 and NEMA Type 4X protection, the unused conduit opening must be plugged with the metal plug provided. Use a suitable thread sealant on both conduit connections. In addition, the threaded housing covers must be installed. Turn covers to seat the O-ring into the housing and then continue to hand tighten until the cover contacts the housing metal-to-metal.

NOTE
1. These transmitters have been designed to meet the electrical safety description listed in Table 3. For detailed information or status of testing laboratory approvals/certifications, contact Invensys.
2. Wiring restrictions required to maintain electrical certification of the transmitter are provided in "Wiring" on page 29.

Table 3. Electrical Safety Specifications

Agency Certification, Types of Protection, and Area Classification	Application Conditions	Electrical Safety Design Code
ATEX flameproof: II 2 GD EEx d IIC, Zone 1.	KEMA 00ATEX2019X Temperature Class T6, T85°C, Ta = -40 to +80°C	D
ATEX intrinsically safe: II 1 GD EEx ia IIC, Zone 0.	SIRA 06ATEX2055X Temperature Class T4,Ta = -40 to +80°C	E
ATEX protection n: II 3 GD EEx nL IIC, Zone 2.	SIRA 06ATEX4056X Temperature Class T4, Ta = -40 to +80°C	N
ATEX multiple certifications, ia & ib and n. Refer to Codes E and N for details.	Applies to Codes D, E, and N.[(a)]	M
CSA intrinsically safe for Class I, Division 1, Groups A, B, C, and D; Class II, Division 1, Groups E, F, and G; Class III, Division 1. Also, Zone certified intrinsically safe Ex ia IIC and energy limited Ex nA II.	Connect per MI 020-427. Temperature Class T4A at 40°C (104°F) and T3C at 85°C (185°F) maximum ambient. Temperature Class T4 at 40°C (104°F), and T3 at 85°C (185°F) max. ambient.	C
CSA explosionproof for Class I, Division 1, Groups B, C, and D; dust-ignitionproof for Class II, Division 1, Groups E, F, and G; Class III, Division 1.	Maximum Ambient Temperature 85°C (185°F).	
CSA for Class I, Division 2, Groups A, B, C, and D; Class II, Division 2, Groups F and G; Class III, Division 2.	Temperature Class T4A at 40°C (104°F) and T3C at 85°C (185°F) maximum ambient.	
CSA field device zone certified flameproof Ex d IIC. Also, all certifications of Code C above.	Maximum Ambient Temperature 85°C (185°F).	B

Table 3. Electrical Safety Specifications (Continued)

Agency Certification, Types of Protection, and Area Classification	Application Conditions	Electrical Safety Design Code
FM intrinsically safe for Class I, Division 1, Groups A, B, C, and D; Class II, Division 1, Groups E, F, and G; Class III, Division 1. Also, Zone certified intrinsically safe AEx ia IIC.	Connect per MI 020-427. Temperature Class T4A at 40°C (104°F) and T4 at 85°C (185°F) maximum ambient. Temperature Class T4 at 85°C (185°F) maximum ambient.	F
FM explosionproof for Class I, Division 1, Groups B, C, and D; dust-ignitionproof for Class II, Division 1, Groups E, F, and G; Class III, Division 1.	Temperature Class T6 at 80°C (176°F) and T5 at 85°C (185°F) maximum ambient.	
FM nonincendive for Class I, Division 2, Groups A, B, C, and D; Class II, Division 2, Groups F and G; Class III, Division 2.	Temperature Class T4A at 40°C (104°F) and T4 at 85°C (185°F) maximum ambient.	
FM field device zone certified flameproof AEx d IIC. Also, all certifications of Code F above.	Temperature Class T6 at 75°C (167°F) maximum ambient.	G
IECEx intrinsically safe: Ex ia IIC.	IECEx SIR 06.0010X Temperature Class T4, Ta = -40 to +80°C.	T
IECEx protection n: Ex nL IIC	IECEx SIR 06.0011X Temperature Class T4, Ta = -40 to +80°C.	U
IECEx flameproof: Ex d IIC	IECEx FMG 06.0007X, Ex d IIC T6 Ta=80°C, T5 Ta=85°C Ambient Temperature -20 to +85°C	V

(a) User must permanently mark (check off in rectangular block on data plate) one type of protection only (ia and ib, d, or n). This mark cannot be changed once it is applied.

ATEX and IECEx Warnings

Do not open while circuits are alive.

ATEX Compliance Documents

EN 50014: 1997 (A1 and A2)
EN 50020: 2002
EN 50284: 1999

EN 50281-1-1: 1998
EN 60079-15: 2004

IECEx Compliance Documents

IEC 60079-0 (Edition 3.1): 2000
IEC 60079-0 (Edition 4): 2000
IEC 60079-1 (Edition 5): 2003
IEC 60079-11 (Edition 4): 1999

2. Installation

CAUTION
To avoid damage to the transmitter sensor, do not use any impact devices, such as an impact wrench or stamping device, on the transmitter.

NOTE
1. The transmitter should be mounted so that any moisture condensing or draining into the field wiring compartment can exit through one of the two threaded conduit connections.
2. Use a suitable thread sealant on all connections.

Transmitter Mounting

The IDP Series differential pressure transmitter can be supported by the process piping or mounted to a vertical or horizontal pipe or surface using the optional mounting bracket. See figures below. For dimensional information, refer to DP 020-446.

NOTE
1. If the transmitter is not installed in the vertical position, readjust the zero output to eliminate the position zero effect.
2. When structure codes 78/79 are used (pvdf inserts) with the IDP10 transmitters, the process connection must be made directly to the pvdf inserts in the high and low side process covers.

Process Mounting

With process mounting, the transmitter mounted to and supported by the process piping.

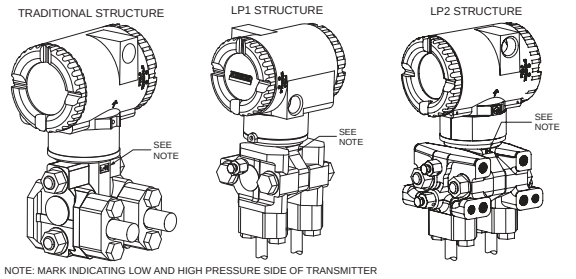

Figure 4. Typical Mounting of an IDP10 Transmitter Supported by Process Piping

Manifold Mounted Transmitter

With manifold mounting, the transmitter is mounted to and supported by a bypass manifold. The bypass manifold can be mounted to a DN50 or 2 inch pipe with an optional mounting bracket. See MI 022-138.

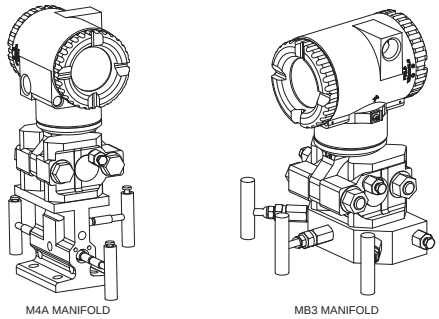

Figure 5. Typical Mounting of an IDP10 Transmitter Supported by a Bypass Manifold

Transmitter Mounted on a Coplanar™ Manifold

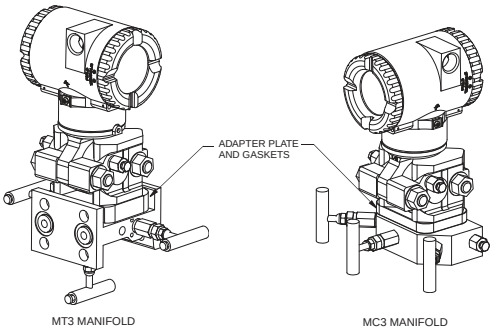

Figure 6. Typical Mounting of IDP10 Transmitter on Coplanar Manifold

Pipe or Surface Mounting

To mount the transmitter to a pipe or surface, use the Standard Mounting Bracket Set (Model Code Option -M1 or M2) or Universal Bracket Mounting Set (Model Code Option -M3).

Standard Mounting Bracket

The transmitter (with either traditional or LP2 low-profile structures) can be mounted to a vertical or horizontal, DN 50 or 2-in pipe using a standard bracket. See Figures 7 and 8 for details of a standard bracket and examples of different mounting situations. Secure the mounting bracket to the transmitter using the four screws provided. Mount the bracket to the pipe. To mount to a horizontal pipe, turn the U-bolt 90° from the position shown. The mounting bracket can also be used for wall mounting by securing the bracket to a wall using the U-bolt mounting holes.

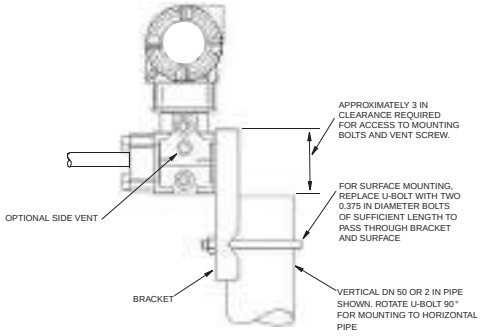

Figure 7. Pipe or Surface Mounted Transmitter Using a Standard Bracket

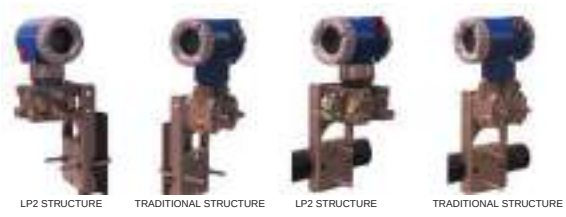

Figure 8. Examples of Mounting With a Standard Bracket

Universal Mounting Bracket

The transmitter (with either traditional or LP2 low-profile structure) can be mounted in a myriad of positions to a vertical or horizontal, DN 50 or 2-in pipe using a universal bracket. See the following figures for details of a universal bracket and examples of different mounting situations. Secure the mounting bracket to the transmitter using the two long or four short screws provided. Mount the bracket to the pipe. The mounting bracket can also be used for wall mounting by securing the bracket to a wall using the U-bolt mounting holes.

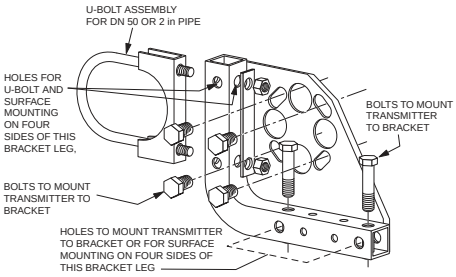

Figure 9. Details of a Universal Bracket

Figure 10. Mounting a Transmitter with Traditional Structure Using a Universal Bracket

Figure 11. Vertical Pipe Mounting a Transmitter with LP2 Structure Using a Universal Bracket

Figure 12. Horizontal Mounting a Transmitter with LP2 Structure Using a Universal Bracket

Venting and Draining

Traditional Structure

Sensor cavity venting and draining is provided for both vertical and horizontal mounting. For vertical mounted units, draining is via a drain screw and venting is possible with side vents (Option Code -V). For horizontal mounted units, the unit is self draining and venting is via a vent screw.

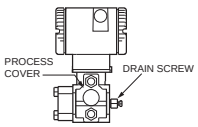

Figure 13. Vertical Mounting - Cavity Draining

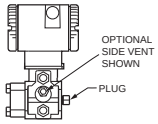

Figure 14. Vertical Mounting - Cavity Venting

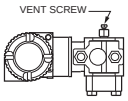

Figure 15. Horizontal Mounting - Cavity Venting

LP1 Low Profile Structure

Sensor cavity venting and draining is provided for both vertical and horizontal mounting. For vertical mounted units, the transmitter is self draining and venting is via a vent screw. For horizontal mounted units, the transmitter can simply be 'turned over' (rotated 180 degrees) to orient the high and low pressure sides in the preferred locations. There is no need to unbolt the

process covers. If the transmitter is connected with a length of impulse piping, such piping should slope up to the transmitter for gas applications and down for liquid applications.

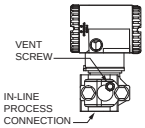

Figure 16. Vertical Mounting - Cavity Venting

Figure 17. Horizontal Mounting - Cavity Venting and Draining

LP2 Low Profile Structure

The transmitter with LP2 low profile structure had a full-featured vent and drain design with separate vent and drain screws positioned in each cover for complete venting and draining from the sensor cavity.

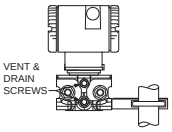

Figure 18. Cavity Venting and Draining

Installation of Flow Measurement Piping

Figures 19 and 20 show typical installations with horizontal and vertical process pipes.

The transmitters are shown below the level of the pressure connections at the pipe (usual arrangement, except for gas flow without a seal liquid), and with filling tees in the lines to the transmitter (for a seal liquid).

If the process fluid being measured must not come in contact with the transmitter, the transmitter lines must be filled with a suitable seal liquid (see procedure in next section). In such a case, the transmitter must be mounted below the level of the pressure connections at the pipe. With steam flow, the lines are filled with water to protect the transmitter from the hot steam. The seal liquid (or water) is added to the lines through the filling tees. To prevent unequal heads on the transmitter, the tees must be at the same elevation and the transmitter must be mounted vertically (as shown). If a seal liquid is not required, elbows can be used in place of the tees.

Tighten drain plugs and optional vent screws to 20 N·m (15 lb·ft). Tighten the four process connector bolts to a torque of 61 N·m (45 lb·ft).

Note that the low and high pressure sides of the transmitter are identified by an L-H marking on the side of the sensor above the warning label.

With medium viscosity seal liquids and/or long transmitter lines, larger valve sizes should be used.

NOTE

1. With a **horizontal** line, pressure connections at the pipe should be at the side of the line. However, with gas flow without a seal liquid, connections should be at top of line.
2. With a **vertical** line, flow should be upwards.
3. For **liquid** or **steam** flow, the transmitter should be mounted **lower** than the pressure connections at the pipe.
4. For **gas** flow **without** a seal liquid, the transmitter should be mounted **above** the pressure connections at the pipe; for **gas** flow **with** a seal liquid, the transmitter should be mounted **below** the pressure connections.
5. Invensys recommends the use of snubbers in installations prone to high levels of fluid pulsations.

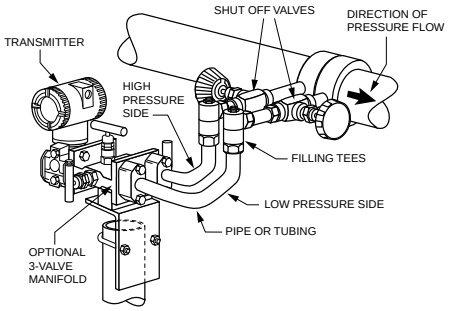

Figure 19. Example of Horizontal Process Line Installation

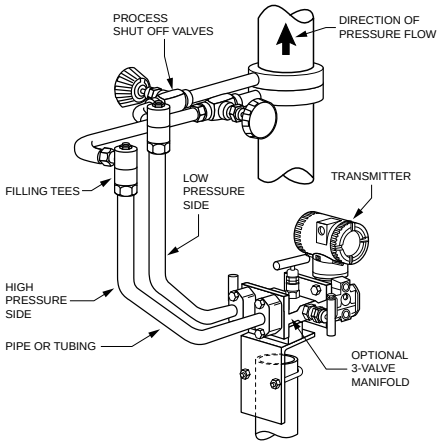

Figure 20. Example of Vertical Process Line Installation

Filling System with Seal Liquid

If the process fluid being measured must not come in contact with the transmitter, the transmitter lines must be filled with a suitable seal liquid. The procedure to do this is as follows:

1. If the transmitter is in service, follow the procedure for "Taking a Differential Pressure Transmitter Out of Operation" on page 35.
2. Close both process shutoff valves.
3. Open all three valves on the 3-valve manifold.
4. Partially open the vent screws on the transmitter until all air has been forced out of the transmitter body and lines. Close the vent screws.
5. Refill the tee connections. Replace the plugs and close the bypass valve. Check for leaks.
6. Follow the procedure for "Putting a Differential Pressure Transmitter Into Operation" on page 35.

CAUTION

To prevent loss of seal liquid and contamination of process fluid, never open both process shutoff valves and manifold shutoff valves if the bypass valve is open.

Positioning the Housing

The transmitter housing (topworks) can be rotated up to one full turn in the counterclockwise direction when viewed from above for optimum access to adjustments, display, or conduit connections. Housings have either an anti-rotation screw or a retention clip that prevent the housing from being rotated beyond a safe depth of housing/sensor thread engagement.

WARNING

If the electronics housing is removed for maintenance, it must be hand tightened to the bottom of the threads, but not over-tightened upon reassembly. See "Removing and Reinstalling a Housing Assembly" on page 69.

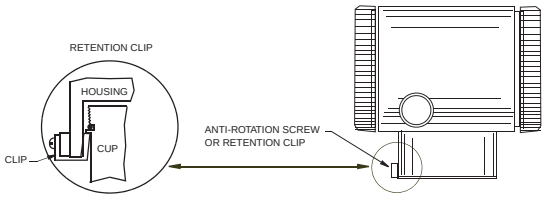

Figure 21. Housing Screw or Clip Location

Positioning the Display

The display (optional in some models) can be rotated within the housing to any of four positions at 90° increments. To do this, grasp the two tabs on the display and rotate it about 10° in a counterclockwise direction. Pull out the display. Ensure that the O-ring is fully seated in its groove in the display housing. Turn the display to the desired position, reinsert it in the electronics module, aligning the tabs on the sides of the assembly, and twist it in the clockwise direction.

CAUTION

Do **not** turn the display more than 180° in any direction. Doing so could damage its connecting cable.

Setting the Write Protect Jumper

Your transmitter has write protection capability. This means that the external zero, local display, and remote communications can be prevented from writing to the electronics. Write protection is set by moving a jumper that is located in the electronics compartment behind the optional display. To activate write protection, remove the display as described in the previous section, then remove the jumper or move it to the lower position as shown on the exposed label. Replace the display.

Cover Locks

Electronic housing cover locks, shown in Figure 22, are provided as standard with certain agency certifications and as part of the Custody Transfer Lock and Seal option. To lock the covers, unscrew the locking pin until approximately 6 mm (0.25 in) shows, lining up the hole in the pin with the hole in the housing. Insert the seal wire through the two holes, slide the seal onto the wire ends and crimp the seal

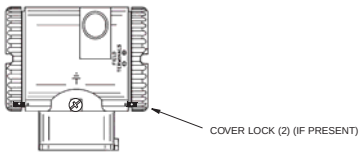

Figure 22. Cover Lock Location

Wiring

The installation and wiring of your transmitter must conform to local code requirements.

WARNING

ATEX requires that when the equipment is intended to be used in an explosive atmosphere caused by the presence of combustible dust, cable entry devices and blanking elements shall provide a degree of ingress protection of at least IP6X. They shall be suitable for the conditions of use and correctly installed.

NOTE

Invensys recommends the use of transient/surge protection in installations prone to high levels of electrical transients and surges.

Accessing Transmitter Field Terminals

For access to the field terminals, thread the cover lock (if present) into the housing to clear the threaded cover and remove the cover from the field terminals compartment as shown in Figure 23. Note that the embossed letters **FIELD TERMINALS** identify the proper compartment.

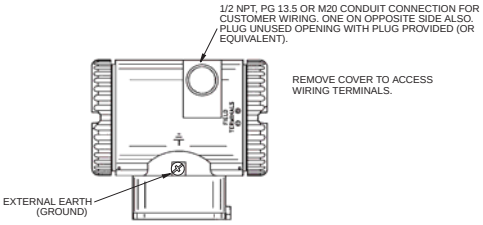

Figure 23. Accessing Field Terminals

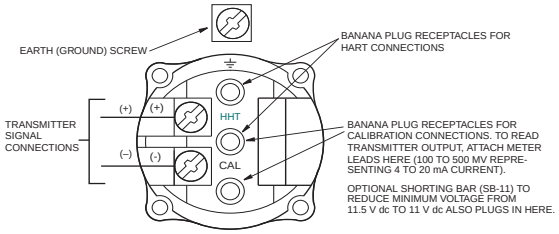

Figure 24. Identification of Field Terminals

Wiring the Transmitter to a Control Loop

When wiring the transmitter, the supply voltage and loop load must be within specified limits. The supply output load vs. voltage relationship is:

R_{MAX} = 47.5 (V - 11.5) and is shown in Figure 25.

NOTE

The relationship when the optional shorting bar is used is:
R_{MAX} = 46.8 (V - 11).

Any combination of supply voltage and loop load resistance in the shaded area can be used. To determine the loop load resistance (transmitter output load), add the series resistance of each component in the loop, excluding the transmitter. The power supply must be capable of supplying 22 mA of loop current.

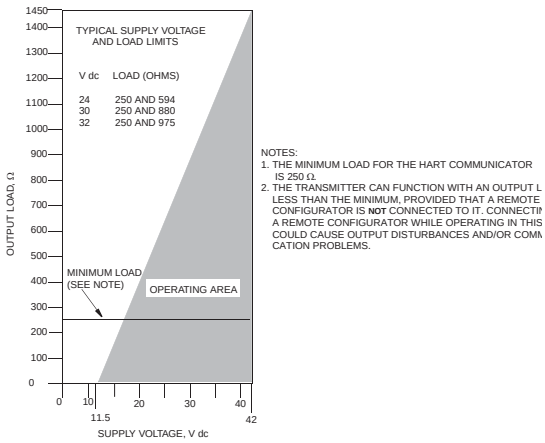

Figure 25. Supply Voltage and Loop Load

Examples:

1. For a loop load resistance of 880 Ω, the supply voltage can be any value from 30 to 42 V dc.
2. For a supply voltage of 24 V dc, the loop load resistance can be any value from 250 to 594 Ω (zero to 594 Ω without a HART Communicator connected to the transmitter).

To wire one or more transmitters to a power supply, proceed with the following steps.

1. Remove the cover from the transmitter field terminals compartment.
2. Run signal wires (0.50 mm^2 or 20 AWG, typical) through one of the transmitter conduit connections. Use twisted single pair to protect the 4 to 20 mA output and/or remote communications from electrical noise. Maximum recommended length for signal wires is:

- 3050 m (10,000 ft) **using single pair cable** and adhering to requirements of HART physical layer implementation defined in HART Document HCF_SPEC-53. Use CN=1 when calculating max. lengths.
- 1525 m (5000 ft) in a multidrop (15 devices maximum) mode. Screened (shielded) cable could be required in some locations.

NOTE
Do not run transmitter wires in same conduit as mains (ac power) wires.

3. If shielded cable is used, earth (ground) the shield at the power supply **only**. Do not ground the shield at the transmitter.
4. Plug unused conduit connection with the 1/2 NPT, PG 13.5 or M20 metal plug provided (or equivalent). To maintain specified explosionproof and dust-ignitionproof protection, plug must engage a **minimum** of five full threads for 1/2 NPT connections; seven full threads for M20 and PG 13.5 connections.
5. Connect an earth (ground) wire to the earth terminal in accordance with local practice.

CAUTION
If the signal circuit must be earthed (grounded), it is preferable to do so at the negative terminal of the dc power supply. To avoid errors resulting from earth loops or the possibility of short-circuiting groups of instruments in a loop, there should be only one earth in a loop.

6. Connect the power supply and receiver loop wires to the "+" and "–" terminal connections.
7. Connect receivers (such as controllers, recorders, indicators) in series with power supply and transmitter as shown in Figure 26.
8. Reinstall the cover onto the housing by rotating it clockwise to seat the O-ring into the housing and then continue to hand tighten until the cover contacts the housing metal-to-metal. If cover locks are present, lock the cover per the procedure described in "Cover Locks" on page 29.
9. If wiring additional transmitters to the same power supply, repeat Steps 1 through 8 for each additional transmitter. The setup with multiple transmitters connected to a single power supply is shown in Figure 27.
10. A HART Communicator or PC-Based Configurator can be connected in the loop between the transmitter and the power supply as shown in Figures 26 and 27. Note that a minimum of 250 Ω must separate the power supply from the HART Communicator or PC-Based Configurator.

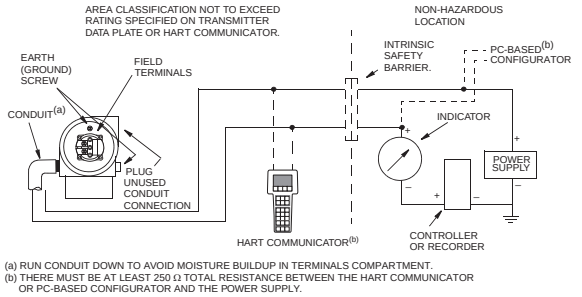

Figure 26. Loop Wiring Transmitters

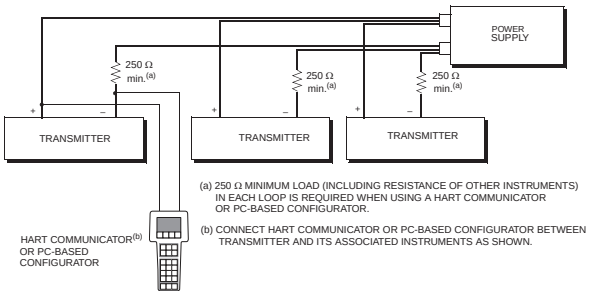

Figure 27. Wiring Several Transmitters to a Common Power Supply

Multidrop Communication

"Multidropping" refers to the connection of several transmitters to a single communications transmission line. Communications between the host computer and the transmitters takes place digitally with the analog output of the transmitter deactivated. With the HART communications

protocol, up to 15 transmitters can be connected on a single twisted pair of wires or over leased telephone lines.

The application of a multidrop installation requires consideration of the update rate necessary from each transmitter, the combination of transmitter models, and the length of the transmission line. Multidrop installations are not recommended where Intrinsic Safety is a requirement. Communication with the transmitters can be accomplished with any HART compatible modem and a host implementing the HART protocol. Each transmitter is identified by a unique address (1-15) and responds to the commands defined in the HART protocol.

Figure 28 shows a typical multidrop network. Do not use this figure as an installation diagram. Contact the HART Communications Foundation, (512) 794-0369, with specific requirements for multidrop applications.

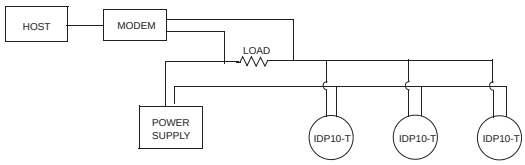

Figure 28. Typical Multidrop Network

The HART Communicator can operate, configure, and calibrate IASPT transmitters with HART communication protocol in the same way as it can in a standard point-to-point installation.

NOTE
IASPT transmitters with HART communication protocol are set to poll address 0 (**POLLADR 0**) at the factory, allowing them to operate in the standard point-to-point manner with a 4 to 20 mA output signal. To activate multidrop communication, the transmitter address must be changed to a number from 1 to 15. Each transmitter must be assigned a unique number on each multidrop network. This change deactivates the 4 to 20 mA analog output.

Connecting the Transmitter to an I/A Series System

The transmitter can also send its measurement to an I/A Series system as a digital signal via an FBM214/215. Wiring terminations at the transmitter are the same as described above. For other system wiring details, refer to the installation instructions provided with the I/A Series system.

Putting a Differential Pressure Transmitter Into Operation

The following procedure explains how to sequence the valves in your flow measurement piping or optional bypass manifold to ensure that your transmitter is not overranged and that seal liquid is not lost. Refer to Figures 19 and 20.

NOTE
This procedure assumes that the process shutoff valves are open.

1. Make sure that both upstream and downstream manifold valves are closed.
2. Make sure that the bypass valve is open.
3. Slowly open the upstream manifold valve.
4. Close the bypass valve.
5. Slowly open the downstream manifold valve.

Taking a Differential Pressure Transmitter Out of Operation

The following procedure explains how to sequence the valves in your flow measurement piping or optional bypass manifold to ensure that your transmitter is not overranged and that seal liquid is not lost. Refer to the Figures 19 and 20.

NOTE
This procedure assumes that the process shutoff valves are open.

1. Close the downstream manifold valve.
2. Close the upstream manifold valve.
3. Open the bypass valve.
4. Carefully open the vent screw to release any residual pressure before disconnecting lines.

WARNING
When venting pressure from the transmitter, wear suitable protective equipment to prevent possible injury from process material, temperature, or pressure.

3. Operation Via Local Display

A local display, as shown in Figure 29, has two lines of information. The upper line is a 5-digit numeric display (4-digit when a minus sign is needed); the lower line is a 7-digit alphanumeric display. The display provides local indication of measurement information.

The display can be configured to meet your specific needs. If configured **Show 1**, M1 is displayed. If configured **Show 2**, M2 is displayed. To temporarily view the alternate measurement, press the **Enter** button. After showing this measurement for a brief period, the display reverts to the configured display. If configured **Toggle**, the display toggles between M1 and M2. When M2 is displayed, an M2 message blinks in the lower right of the display.

The display also provides a means for reranging, calibration, and configuration, viewing the database, testing the display, and reranging the transmitter via the 2-button keypad. You can access these operations by means of a multi-level menu system. Entry to the Mode Select menu is made (from normal operating mode) by pressing the **Next** button. You can exit this menu, restore your prior calibration or configuration, and return to the normal operating mode at any time by going to **Cancel** and pressing the **Enter** button.

The top level structure diagram is shown in Figure 30.

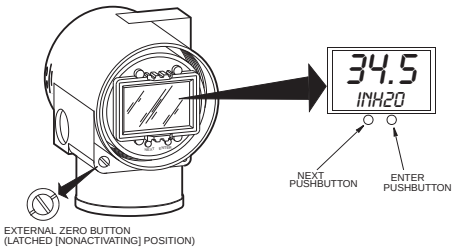

Figure 29. Local Display Module

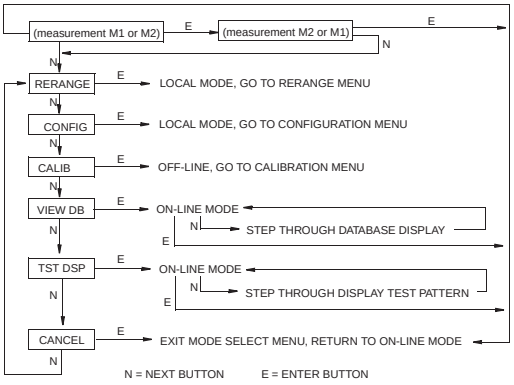

Figure 30. Top Level Structure Diagram

Entering Numerical Values

The general procedure for entering numerical values in Calibration and Configuration is as follows:

1. At the appropriate prompt, press the **Enter** button. The display shows the last (or default) value with the first digit flashing.
2. Use the **Next** button to select the desired first digit, then press the **Enter** button. Your selection is entered and the second digit flashes.
3. Repeat Step 2 until you have created your new value. If the number has less than five characters, use leading or trailing zeros for the remaining spaces. When you have configured the fifth space, the display prompts you to place the decimal point.
4. Move the decimal point with the **Next** button until it is where you want it and press the **Enter** button.

NOTE

1. The decimal point may not be placed directly after the first digit. For example, you can not enter a value as 1.2300; you must enter it as 01.230.
2. The decimal position is identified by flashing except at the position after the fifth digit. At that position (representing a whole number), the decimal point is assumed.

5. The display advances to the next menu item.

Reranging

You can access the Rerange mode in the top level menu (see Figure 30). Entry to the Mode Select menu is made (from normal operating mode) by pressing the **Next** button. The display reads **RERANGE**. You can then adjust **M1 URV** and/or **M1 LRV** in the following two submenus.

NOTE

If **M1 MODE** is in a square root mode, regardless of engineering units selected, **RERANGE** is automatically done in the following "default" pressure units:
- **inH2O**, if **M2 MODE** is a type of square root.
- **M2 EGU** units, if **M2 MODE** is linear.

The bottom line of the display indicates the "default units" during **RERANGE**. Following **RERANGE**, the display automatically switches back to the configured engineering units.

M1 URV:

To edit the upper range value, press **Enter** at the prompt **M1 URV**. Use the procedure "Entering Numerical Values" on page 38 section to edit this parameter.

M1 LRV:

Similar to **M1URV** immediately above.

NOTE

M1 LRV is bypassed if **M1 MODE** is configured as square root since **M1 LRV** must be zero.

Viewing the Database

You can access the View Database mode by the multi-level menu system described above. Entry to the Mode Select menu is made (from normal operating mode) by pressing the **Next** button. The display reads **RERANGE**. Use the **Next** button to get to **VIEW DB**. Acknowledge your choice of this selection by pressing the **Enter** button. The display shows the first item in the database. You can step through the database display by repeated use of the **Next** button. You can abort this procedure at any time by pressing the **Enter** button.

Viewing the Pressure Range

The values of M1LRV and M1 URV can be viewed in VIEW DB as described above.

Testing the Display

You can access the Test Display mode by the same multi-level menu system that was used to enter Reranging, Calibration, Configuration, and View Database mode. Entry to the Mode Select menu is made (from normal operating mode) by pressing the **Next** button. The display reads **RERANGE**. Use the **Next** button to get to **TST DSP**. Acknowledge your choice of this selection by pressing the **Enter** button. The display shows the first test segment pattern. You can step through the five patterns by repeated use of the **Next** button. You can abort the test at any time by pressing the **Enter** button. The five patterns are shown in Figure 31.

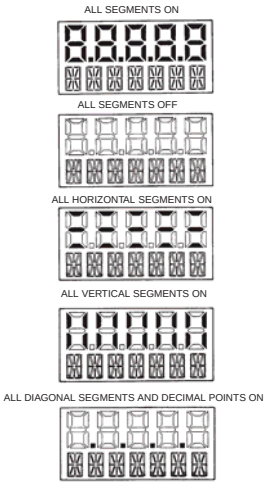

Figure 31. Display Test Segment Patterns

Error Messages

Table 4. Operation Error Messages

Parameter	Condition Tested	Error Message	Action
Normal Operation	Write Protection Enabled	WR PROT	Displays periodically to notify user that unit is in Write Protect.
	Any non-On-line Condition	OFFLINE	Notifies user of a non-On-line condition.
Startup	Database OK or corrupted	INITERR	User should perform SET GDB procedure. See "SET GDB:" on page 63.

4. Calibration

NOTE

1. For best results in applications where high accuracy is required, rezero the transmitter output once it has stabilized at the final operating temperature.
2. Zero shifts resulting from position effects and/or static pressure effects can be eliminated by rezeroing the transmitter output.
3. When checking the zero reading of a transmitter operating in the square root mode, return the output to the linear mode. This eliminates an apparent instability in the output signal. Return the transmitter output to the square root mode after the zero check is complete.
4. After calibrating transmitters operating with a 4 to 20 mA (or 1 to 5 V dc) output signal, check the underrange and overrange output values to ensure that they extend beyond 4 and 20 mA (or 1 and 5 V dc) respectively.

General Calibration Notes

1. Each transmitter is factory characterized over its full rated pressure range. One benefit of this process is that every transmitter can measure any applied differential pressure within its range limits regardless of the calibrated range. The applied differential pressure is measured and converted into an internal digital value of differential pressure. This digital value of differential pressure is always available whether the transmitter is calibrated or not. Calibration assures that the transmitter rated accuracy is achieved over the calibrated range.
2. The internal digital value of differential pressure can be displayed on the optional local display, transmitted digitally, and converted to a 4 to 20 mA analog output signal.
3. Each transmitter is factory calibrated to either a specified or a default calibrated range. This calibration optimizes the accuracy of the internal digital value of differential pressure over that range. If no range is specified, the default range is zero to the sensor upper range limit (URL).
4. The transmitter database has configurable values for both Lower Range Value (LRV) and upper range value (URV). These values are used for two functions.
   a. Defining the Calibrated Range When Using Local Pushbuttons for Calibration:
      - When either **CAL LRV** or **CAL URV** is initiated from the local pushbuttons, the transmitter expects that the differential pressure applied at the time the button is pressed is equal to the LRV or URV value respectively.
      - This function trims the internal digital value of differential pressure; that is, it performs a calibration based on the application of accurate differential pressures equal to the values entered for LRV and URV in the transmitter database.
      - This function also sets the 4 and 20 mA output points; that is, the 4 and 20 mA points correspond to the values of LRV and URV in the database.

      - The value of LRV can be larger than the value of URV.

   b. Reranging Without the Application of Pressure:
      - Since the transmitter continually determines an internal digital value of the measured differential pressure from the lower range limit (LRL) to the upper range limit (URL), the 4 and 20 mA output points can be assigned to any differential pressure values (within the span and range limits) without application of pressure.
      - The reranging function is accomplished by entering new database values for LRV and URV.
      - Reranging does not affect the calibration of the transmitter; that is, it does not affect the optimization of the internal digital value of differential pressure over a specific calibrated range.
      - If the reranged LRV and URV are not within the calibrated range, the measured values may not be as accurate as when they are within the calibrated range.

   If the transmitter is in square root mode for flow rate measurement, the URV in the database is displayed as the flow rate URV when the view database (**VIEW DB**) function is used. However, the LRV and URV in pressure units can be displayed by selecting the reranging (**RERANGE**) function. LRV is always zero when the transmitter is configured for square root mode.
5. When the optional local display is used, the internal digital value of differential pressure is sent directly to the indicator.
   - The display can show any measured differential pressure in selected units regardless of the calibrated range and the values of LRV and URV (within the limits of the transmitter and display).
   - If the measured differential pressure is outside the range established by the LRV and URV values in the database, the display shows the measurement but also continually blinks to indicate that the measurement is out of range. The mA current signal is saturated at either the low or high overrange limit respectively but the display continually shows the pressure.
6. When configured for 4 to 20 mA output, the internal digital value of differential pressure is converted to an analog current signal.
   - The transmitter sets the output at 4 mA for the LRV and 20 mA for the URV.
   - There is an independent trim on the digital-to-analog conversion stage. This trim allows for slight adjustment of the 4 and 20 mA outputs. This compensates for any slight difference that exists between the transmitter mA output and an external reference device which is measuring the current.
   - The mA trim does not affect the calibration or the reranging of the transmitter and does not affect the internal digital value of differential pressure or the transmission or display of measured pressure.
   - The mA trim can be done with or without pressure applied to the transmitter.
7. Zeroing from the local display does not affect the span.

When the transmitter is zeroed to compensate for installed position effect, the transmitter can have either LRV differential pressure applied (**CAL LRV**) or zero differential pressure applied (**CAL AT0**). If using a zero-based range, either method produces the same result. However, if the range is not zero-based, it is advantageous to have both methods available.

For example, consider a differential pressure transmitter having a range of 50 to 100 psig. If it is not feasible to vent the transmitter to atmosphere for zeroing (or to bypass the high and low sides for zeroing), it can be zeroed while the LRV differential pressure of 50 psi is applied by using the **CAL LRV** function. On the other hand, if the transmitter has been installed but there is no pressure in the process line yet (or the high and low sides can be connected by a bypass valve), it can be zeroed while open to atmosphere (or bypassed) by using the **CAL AT0** function.

a. Zeroing with LRV Pressure Applied (**CAL LRV**):
   - Before using this zeroing function, apply a differential pressure to the transmitter equal to the value of LRV stored in the transmitter database.
   - When you zero the transmitter, the internal digital value of differential pressure is trimmed to be equal to the value of LRV stored in the database and the mA output set to 4 mA.
   - If zeroing is done when the applied differential pressure is different from the LRV value in the database, the internal digital value of differential pressure is biased by the difference in the values but the output is still set at 4 mA.
   - The **CAL LRV** and **CAL URV** function should be used when calibrating a transmitter for a specific range with known input differential pressures applied for the LRV and URV.

b. Zeroing with Zero Pressure Applied (**CAL AT0**):
   - Make sure that the applied differential pressure is at zero. This means venting the transmitter to atmosphere or opening a bypass valve to connect high and low sides.

- When you zero the transmitter, the internal digital value of the differential pressure is trimmed to be equal to zero and the mA output set to an appropriate value such that the mA output is a nominal 4 mA when the LRV pressure is applied later.

Calibration Setup

The following sections show setups for field or bench calibration. Use test equipment that is at least three times as accurate as the desired accuracy of the transmitter.

NOTE

It is not necessary to set up calibration equipment to rerange the transmitter to a different range. The transmitter can be accurately reranged by simply changing the lower range value and the upper range value, which are stored in the transmitter database.

Setup of Electronic Equipment

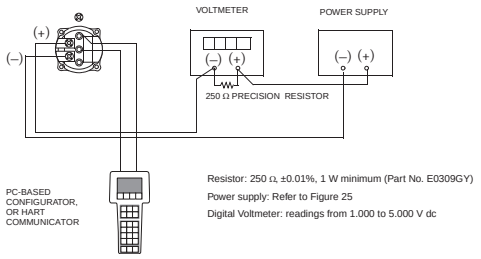

Figure 32. 4 to 20 mA Output Calibration Setup of Electronic Equipment

Field Calibration Setup

Field calibration is performed without disconnecting the process piping. In order to do this, you must have a bypass and shutoff valves between the process and the transmitter and one of the following:

- Access to the process connections on the nonprocess side of the transmitter
- The optional vent screw in the side of the process covers.

If the transmitter is to be removed from the process for calibration, refer to "Bench Calibration Setup"below.

For field calibration, an adjustable air supply and a pressure measuring device are required. For example, a dead weight tester or an adjustable clean air supply and pressure gauge can be used. The pressure source can be connected to the transmitter process connection with pipe fittings or it can be connected to the vent screw assembly using a calibration screw. The calibration screw has a Polyflo fitting and can be used for pressures up to 700 kPa (100 psi). It is available as Foxboro Part Number F0101ES.

To set up the equipment, refer to Figure 33 and use the following procedure.

1. If the transmitter is in operation, follow the "Taking a Differential Pressure Transmitter Out of Operation" on page 35.

⚠ CAUTION

With liquid service, drain both sides of transmitter to avoid calibration errors.

2. If a calibration screw **is** being used, remove the vent screw and replace it with the calibration screw. Connect the pressure source to the calibration screw using 6 x 1 mm or 0.250 inch tubing.
   If a calibration screw is **not** being used, remove the entire vent screw assembly or drain

plug (as applicable) from the high pressure side of the transmitter. Connect calibration tubing using a suitable thread sealant.

3. Close the bypass valve opened in Step 1.
4. Complete the setup shown in Figure 33.

NOTE

For vacuum applications, connect the calibrating pressure source to the low pressure side of the transmitter.

5. If calibrating the output signal, also connect equipment as shown in Figure 32.

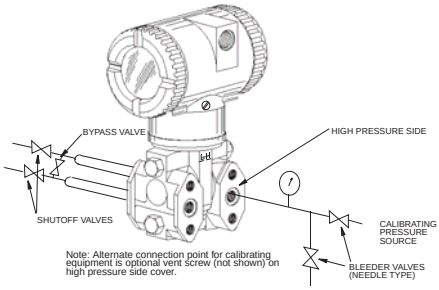

Figure 33. Field Calibration Setup

Bench Calibration Setup

The bench calibration setup requires disconnecting the process piping. For calibration setup without disconnecting the process piping, refer to "Field Calibration Setup" above.

The bench calibration setup is shown in Figure 34. Connect the input piping to the high pressure side of the transmitter as shown. Vent the low pressure side of the transmitter.

NOTE

For vacuum applications, connect the calibrating pressure source to the low pressure side of the transmitter.

If calibrating the output signal, also connect equipment as shown in Figure 32.

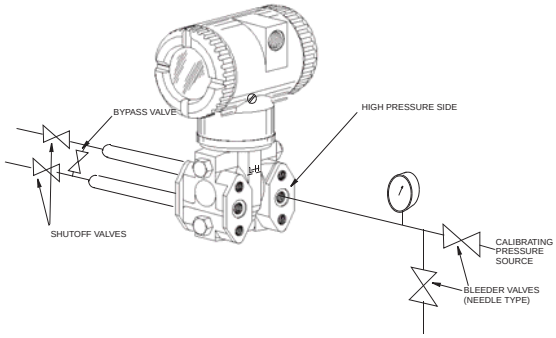

Figure 34. Bench Calibration Setup

Calibration Using a PC20

To calibrate the transmitter using a PC20 Configurator, follow the procedure in MI 020-495.

Calibration Using a PC50

To calibrate the transmitter using a PC50 Configurator, follow the procedure in MI 020-501 and MI 020-520.

Calibration Using a HART Communicator

To calibrate the transmitter using a HART Communicator, follow the procedure in MI 020-366.

Calibration Using the Optional Local Display

To access the Calibration mode (from normal operating mode), press the **Next** button. The display reads **CALIB**, the first item on the menu. Acknowledge your choice of this selection by pressing the **Enter** button. The display shows the first item in the Calibration menu.

NOTE

1. During calibration, a single change could affect several parameters. For this reason, if an entry is entered in error, re-examine the entire database or use the **Cancel** feature to restore the transmitter to its starting configuration and begin again.

2. During adjustment of 4 and 20 mA in the Calibration menu, the milliampere output does not reflect live measurement values.

Table 5. Calibration Menu

Item	Description
CAL AT0	Calibrate at zero pressure.
CAL LRV	Calibrate with pressure at 0% of transmitter range (LRV).
CAL URV	Calibrate with pressure at 100% of transmitter range (URV).
ADJ 4mA	Adjust nominal 4 mA output.
ADJ20mA	Adjust nominal 20 mA output.
CALDATE	Enter the calibration date.
ADJ 4mA causes the following four submenus.	
A 4mAΔΔ	Increase 4 mA output by large step.
A 4mA∇∇	Decrease 4 mA output by large step.
A 4mAΔ	Increase 4 mA output by small step.
A 4mA∇	Decrease 4 mA output by small step.
ADJ 20mA causes the following four submenus.	
A 20mAΔΔ	Increase 20 mA output by large step.
A 20mA∇∇	Decrease 20 mA output by large step.
A 20mAΔ	Increase 20 mA output by small step.
A 20mA∇	Decrease 20 mA output by small step.

NOTE

It is not necessary to use the **ADJ4mA** or **ADJ20mA** menu selections (commonly known as mA Trim) unless there is a plant requirement to make the 4 and 20 mA output values exactly match readings on certain plant calibration equipment and the calibration operations done result in a small but unacceptable difference between the transmitter mA output and the test equipment mA readout values.

Proceed to calibrate your transmitter by using the **Next** key to select your item and the **Enter** key to specify your selection per Figures 35 and 36. At any point in the calibration you can **Cancel**, restore your prior calibration and return to the on-line mode or **Save** your new calibration.

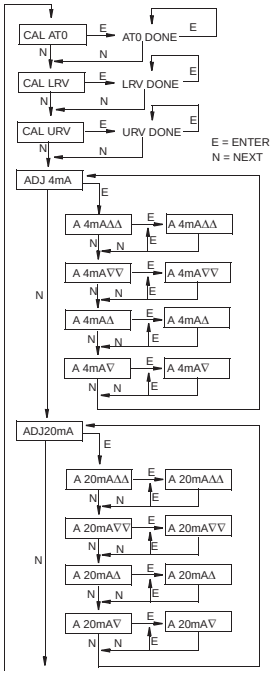

(continued on next figure)

CAL AT0: To set or reset the zero point at zero pressure, apply zero differential pressure to the transmitter and, at display of **CAL AT0**, press **Enter**. This can be done whether LRV is zero or not. Completion is indicated by the display **AT0 Done**.

CAL LRV: To set or reset 0% of range input, apply differential pressure to the transmitter equal to the lower range value (LRV) in the transmitter database and, at display of **CAL LRV**, press **Enter**. Completion is indicated by the display **LRV Done**.

CAL URV: To set or reset 100% of range input, apply differential pressure to the transmitter equal to the upper range value (URV) in the transmitter database and, at display of **CAL URV**, press **Enter**. Completion is indicated by the display **URV Done**.

ADJ4mA: If you configured your transmitter operating mode as 4 to 20 mA, you can adjust the 4 mA output by going to **ADJ4mA** using the **Next** button and press **Enter**. This menu item is bypassed if you configured your transmitter for multidrop mode (poll address other than zero).

To increase the 4 mA output by a large (0.025 mA) step, press **Enter** at the display **A 4mAΔΔ**. To decrease it by a large step, go to

Figure 35. Calibration Structure Diagram

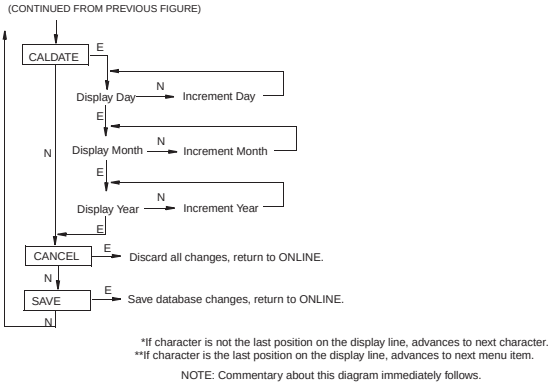

Figure 36. Calibration Structure Diagram (Continued)

Commentary on Figure 36

CALDATE:

This is not a required entry but can be used for recordkeeping or plant maintenance purposes. To edit the calibration date, go to **CALDATE** with the **Next** button and press **Enter**. You then can change the day, month, and year. The display shows the last date with the day flashing. Use the **Next** button to step through the menu of digits to select the desired day, then press **Enter**. Repeat this process for the month and year.

Zero Adjustment Using External Zero Button

An optional external zero adjustment mechanism in the electronics housing allows calibration at zero differential pressure (the **CAL AT0** function) or at the lower range value differential pressure (the **CAL LRV** function) without removing the electronics compartment cover. The mechanism is magnetically activated through the housing wall to prevent moisture from entering the enclosure.

NOTE

Do **not** use CAL AT0 if pressure seals are used that are at different elevations from the transmitter.

To use this feature:

1. Unlatch the external zero button by turning it 90° in a counterclockwise direction so that the screwdriver slot lines up with the two holes in the face of the adjacent part. Do **not** push the button in with the screwdriver while doing this.
2. To set or reset the zero point at zero differential pressure, apply zero differential pressure to the transmitter or use a bypass valve to equalize pressure on both sides of the transmitter. Press the external zero button until the display reads **CAL AT0**. Release the button. The display reads **CAL WAIT** and then **RESET** (calibration is complete).

   To set or reset the 0% of range input, apply the lower range value (LRV) differential pressure to the transmitter and press and hold the external zero button until the display reads **CAL LRV** (it reads **CAL AT0** first). Release the button. The display reads **CAL WAIT** and then **RESET** (calibration is complete).

NOTE

If the optional display is not present, the same functions can be accomplished by depending on the length of time the external zero button is depressed. Press and hold the button for 1 to 3 seconds for **CAL AT0** or for 5 or more seconds for **CAL LRV**. Therefore, if your LRV is zero, just depress the button for a few seconds. However, if your LRV is not zero, use **caution** when using the external zero button without the optional display because you must rely strictly on the length of time the button is depressed to differentiate between **CAL AT0** and **CAL LRV**.

Other possible messages are:
DISABLD if **EX ZERO** is configured **EXZ DIS**
IGNORED if the transmitter is not in the on-line mode.
WP ENAB if write protection jumper is in write protect position.

If additional rezeroing is required after Steps 1 and 2 have been accomplished, repeat Step 2.

3. Relatch the external zero button by turning it 90° in a clockwise direction to prevent accidental pressing of the button. Do **not** push the button in with the screwdriver while doing this.

Error Messages

Table 6. Calibration Error Messages

Parameter	Condition Tested	Error Message	User Action
Password Protection	Password	BAD PWD	Bad password entered, use another.
Write Protection	Write protection enabled	REJECT	Displays when user attempts an action that is write protected.
ZERO	Internal offset too large	BADZERO	Check applied pressure, configured **M1 LRV** and configured **M1 EOFF**.
SPAN	Slope too large or too small	BADSPAN	Check applied pressure, configured **M1 LRV** and configured **M1 EFAC**.
M1 URV	M1URV > max pressure in EGU	URV>FMX	Entered pressure is greater than maximum rated pressure of transmitter. Check entry. Verify EGUs.
	M1URV < min pressure in EGU	URV<FMN	Entered pressure is less than minimum rated pressure of transmitter. Check entry. Verify EGUs.
	M1 URV = M1 LRV	LRV=URV	Cannot set span to 0. Check entry. Check **M1 LRV**.
	M1 turndown exceeds limit	BADTDWN	Check entry. Check **M1 LRV**.
	URV < 0 with M1 or M2 SqRt	URV<LRV	Square root mode with nonzero LRV is not valid. Change LRV to 0.
M1 LRV	M1LRV > max pressure in EGU	LRV>FMX	Entered pressure is greater than maximum rated pressure of transmitter. Check entry. Verify EGUs.
	M1LRV < min pressure in EGU	LRV<FMN	Entered pressure is less than minimum rated pressure of transmitter. Check entry. Verify EGUs.
	M1 URV = M1 LRV	LRV=URV	Cannot set span to 0. check entry. Check **M1 URV**.
	M1 turndown exceeds limit	BADTDWN	Check entry. Check **M1 URV**.

5. Configuration

Configurable Parameters

Table 7 lists all the configurable parameters and the factory default for the IDP10-T Transmitters. The factory default values have been customized if the transmitter was ordered with optional feature -C2. The table also shows which parameters are configurable with the integral vs. remote configurators.

Table 7. IDP10-T Configurable Parameters

Parameter	Capability	Factory Default	Configurable with		Application Requirement
			Integ. Indic.	Remote Config.	
Descriptors					
Tag Number	8 characters max	Tag Number	No	Yes	
Descriptor	16 characters max	Tag Name	No	Yes	
Message	32 characters max	Inst Location	No	Yes	
Input					
Calibrated Range	LRV to URV in units listed in (a) below	See (b) below when not specified per S.O.	Yes	Yes	
Output					
Measurement #1 Output (PV)	4 to 20 mA or Fixed Current. Specify Poll Address (1-15) for Fixed Current.	4 to 20 mA	Yes	Yes	
Measurement #1 Mode	Linear or type of square root in (d) below	Linear	Yes	Yes	
Measurement #1 EGUs	If linear, select from units listed in (a) below; If Sq.Rt., select from units listed in (c) below	Units of Calibrated Range	Yes	Yes	
Measurement #2 Mode (SV)	Linear or type of square root in (d) below	Linear	Yes	Yes	
Measurement #2 EGUs	If linear, select from units listed in (a) below; If Sq.Rt., select from units listed in (c) below	Units of Calibrated Range	Yes	Yes	
Temp. Sensor Fail Strategy	Normal oper. or failsafe	Fail-safe	Yes		
Fail-safe	High or Low	High	Yes	Yes	
External Zero	Enabled or Disabled	Enabled	Yes	Yes	
Damping	0 to 32 seconds.	None	Yes	Yes	

Table 7. IDP10-T Configurable Parameters (Continued)

Parameter	Capability	Factory Default	Configurable with		Application Requirement
			Integ. Indic.	Remote Config.	
Poll Address	0 - 15	0	Yes	Yes	
LCD Indicator (e)	Meas #1 EGU or % Lin	Meas #1 EGU	Yes	No	

(a) psi, inHg, ftH_2O, inH_2O, atm, bar, mbar, MPa, kPa, Pa, kg/cm^2, g/cm^2, mmHg, torr, mmH_2O.

(b) Span Code A: 0 to 30 inH_2O; Span Code B: 0 to 200 inH_2O; Span Code C: 0 to 30 psi; Span Code D: 0 to 300 psi; Span Code E: 0 to 3000 psi.

(c) gal/s, gal/m, gal/h, gal/d, Mgal/d, ft^3/s, ft^3/m, ft^3/h, ft^3/d, Igal/s, Igal/m, Igal/h, Igal/d, l/s, l/m, l/h, Ml/d, m^3/s, m^3/m, m^3/h, m^3/d, bbl/s, bbl/m, bbl/h, bbl/d, %flow.

(d) Square root with cutoff below 1% of calibrated pressure range or with linear below 4% of calibrated pressure range.

(e) Measurement #2 can be displayed at any time by pressing the **Enter** button regardless of the local display configuration. This reverts to Measurement #1 or % Lin (as configured) when power is cycled off and on.

Configuration Using a PC20

To configure the transmitter using a PC20 Configurator, follow the procedure in MI 020-495.

Configuration Using a PC50

To configure the transmitter using a PC50 Configurator, follow the procedure in MI 020-501 and MI 020-520.

Configuration Using a HART Communicator

To configure the transmitter using a HART Communicator, follow the procedure in MI 020-366.

Configuration Using the Optional Local Display

You can access the Configuration mode by the same multi-level menu system that was used to enter Calibration mode. Entry to the Mode Select menu is made (from normal operating mode) by pressing the **Next** button. The display reads **CALIB**, the first item on the menu. Press the **Next** button again to get to the second item on the menu, **CONFIG**. Acknowledge your choice of this selection by pressing the **Enter** button. The display shows the first item in the Configuration menu. You can then configure items shown in Table 8. The standard factory default configuration is also given in this table.

The standard factory default configuration is not used if custom configuration option -C2 has been specified. Option -C2 is a full factory configuration of all parameters to the user's specifications.

NOTE

1. You can configure most parameters using the local display. However, for more complete configuration capability, use a HART Communicator or PC-Based configurator.
2. During configuration, a single change can affect several parameters. For this reason, if an entry is entered in error, re-examine the entire database or use the **Cancel** feature to restore the transmitter to its starting configuration and begin again.

Table 8. Configuration Menu

Item	Description	Initial Factory Configuration
POLLADR	Poll Address: 0 - 15	0
EX ZERO[(a)]	External Zero: enable or disable	Enable
S2 FAIL	Temperature Sensor Failure Strategy: S2FATAL or S2NOFTL	S2FATAL
OUT DIR	4 to 20 mA Output: forward or reverse	Forward
OUTFAIL	4 to 20 mA Output: fail mode output - low or high	High
OFFL MA	4 to 20 mA Output in offline mode - last or user set	USER MA
DAMPING	Damping: none, 1/4, 1/2, 1, 2, 4, 8, 16, or 32 seconds	None
M1 MODE	Output: linear or type of square root[(b)]	Linear
M1DISP	Local Indicator Display in linear mode: in percent or engineering units	M1EGU
M1 EGU	User-Defined Engineering Units	inH_2O or psi
M1 URV	Primary Upper Range Value	URL
M1 LRV	Primary Lower Range Value	0
M2 MODE	Output: linear or type of square root	Linear
M2 EGU	User-Defined Engineering Units	Same as M1 EGU
DISPLAY	Display M1, M2, or Toggle between M1 and M2	M1
CALDATE	Calibration Date	- - -
ENA PWD	Enable password; no password, configuration only, or configuration and calibration	NO PWD
CFG PWD	User set configuration password (six characters)	- - -
CAL PWD	User set calibration password (six characters)	- - -
SET GDB	Rewrite all calibration and configuration values with default values	- - -

(a) Applies only if transmitter contains External Zero option.

(b) Square root is not applicable to absolute pressure, gauge pressure, and flange level measurement.

Proceed to configure your transmitter by using the **Next** button to select your item and the **Enter** button to specify your selection per the following three figures. At any point in the configuration you can **Cancel** your changes and return to the on-line mode, or **Save** your changes.

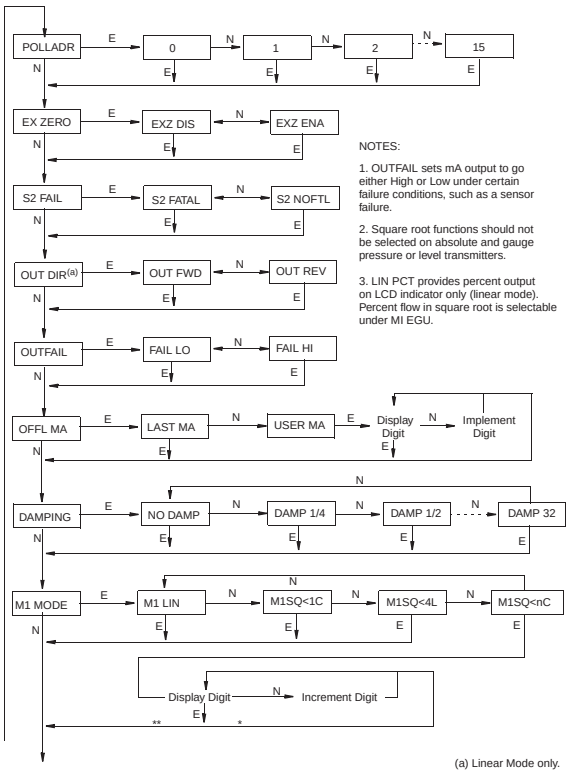

(continued on next figure)

Figure 37. Configuration Structure Diagram

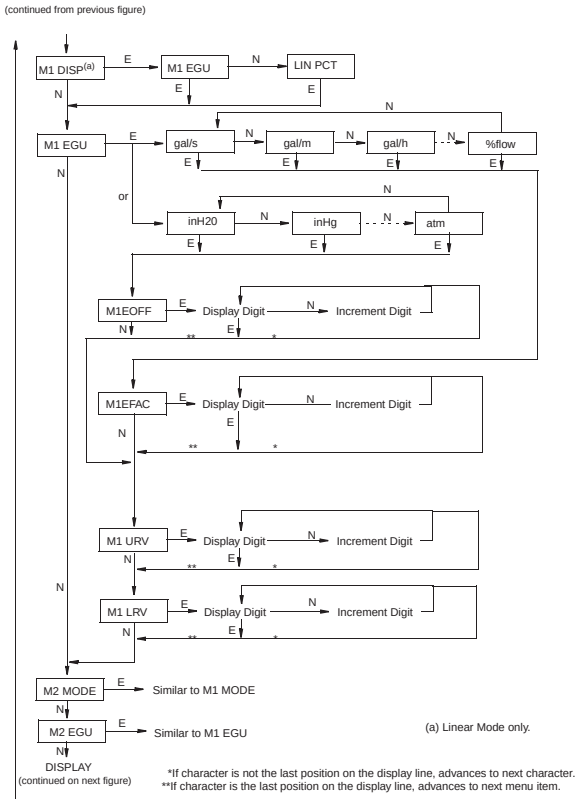

Figure 38. Configuration Structure Diagram (Continued)

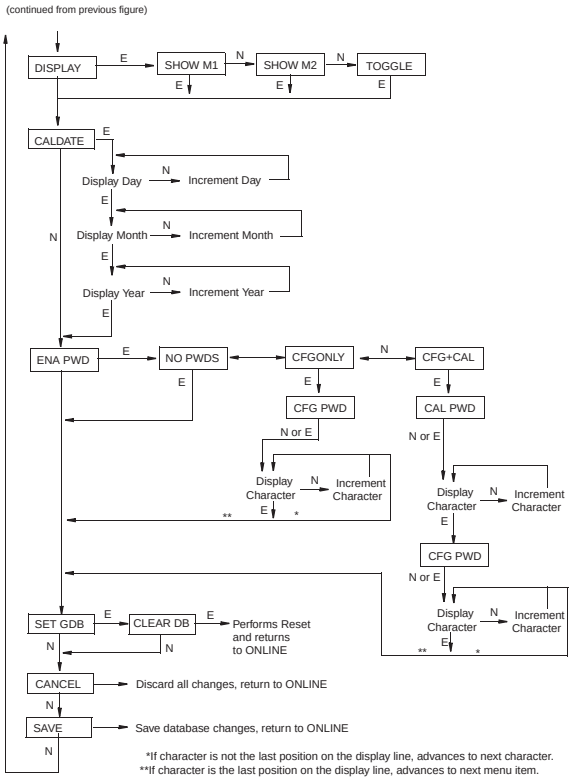

Figure 39. Configuration Structure Diagram (Continued)

Commentary on Configuration Structure Diagram

In general, use the **Next** button to select your item and the **Enter** button to specify your selection.

POLLADR:

To configure the transmitter poll address, press **Enter**. Use the **Next** button to select an address of **0** through **15**, then press **Enter**. An address of 1 through 15 is used for multidrop mode with a fixed mA output.

EX ZERO:

The External Zero feature allows the optional external zero pushbutton to be disabled for additional security. To configure this feature, go to **EX ZERO** with the **Next** button and press **Enter**. Use the **Next** button to select **EXZ DIS** or **EXZ ENA** and press **Enter**.

S2 FAIL:

The temperature sensor compensates for changes in temperature in the transmitter electronics. Failure of this sensor can cause a 4 to 20 mA accuracy change of up to 0.25%. The **S2 FAIL** feature allows you to specify action (or no action) if such a failure occurs. To configure this feature, go to **S2 FAIL** with the **Next** button and press **Enter**. Use the **Next** button to select **S2 FATAL** (to have the output go to that configured in **OUTFAIL**) or **S2 NOFTL** (to continue operation with a temperature sensor failure). This parameter has no effect if **POLLADR** is configured to any number from **1** through **15** and is bypassed if **M1 MODE** or **M2 MODE** is configured as square root.

OUT DIR:

To configure the Output Direction, go to **OUT DIR** with the **Next** button and press **Enter**. Use the **Next** button to select **OUT FWD** (4 - 20 mA) or **OUT REV** (20 - 4 mA) and press **Enter**. This parameter has no effect if **POLLADR** is configured to any number from **1** through **15** and is bypassed if **M1 MODE** or **M2 MODE** is configured as square root.

OUTFAIL:

The Outfail feature provides high or low output with certain malfunctions. To configure the fail mode output, go to **OUTFAIL** with the **Next** button and press **Enter**. Use the **Next** button to select **FAIL LO** or **FAIL HI** and press **Enter**. This parameter has no effect if **POLLADR** is configured to any number from **1** through **15**.

OFFL MA:

The Off-line mA feature enables you to set the output to a specified value or to the last value if the transmitter goes off-line. To configure the off-line output, go to **OFFL MA** with the **Next** button and press **Enter**. Use the **Next** button to select **LAST MA** or **USER MA** and press **Enter**. If you selected **USER MA**, press **Enter** again at the display of digits. Then use the **Next** button to step through the library of digits to select the desired first digit, then press **Enter**. Your selection is entered and the second character flashes. Repeat this procedure until you have entered the last digit. Then use the **Next** button to move the decimal point to its desired location and press **Enter**. The display advances to the next menu item.

DAMPING:

To configure additional damping, go to **DAMPING** with the **Next** button and press **Enter**. Use the **NEXT** button to select **NO DAMP**, **DAMP 1/4**, **DAMP 1/2**, **DAMP 1**, **DAMP 2**, **DAMP 4**, **DAMP 8**, **DAMP 16**, or **DAMP 32** and press **Enter**.

M1 MODE:

To configure the mode of the primary output (PV), go to **M1 MODE** with the **Next** button and press **Enter**. Use the **Next** button to select **M1 LIN** (linear), **M1SQ<1C** (square root with cutoff below 1% dp (M1 URV in linear units of dp), **M1SQ<4L** (square root with linear below 4% of dp (M1 URV in linear units of dp), or **M1SQ<nC** (square root with user configured cutoff specified between 0 and 20% of the flow upper range value, M1 EFAC) and press **Enter**. You cannot configure this parameter as square root if **OUT DIR** was configured as **OUT REV** or if M1LRV is not zero.

— NOTE

Cutoff in **M1SQ<1C** and **M1SQ<4L** is in percent of differential pressure but cutoff in **M1SQ<nC** is in percent of flow rate.

M1 DISP:

To configure the optional local indicator to show engineering units or percent in linear mode, go to **M1 DISP** with the **Next** button and press **Enter**. Use the **Next** button to select **M1 EGU** or **LIN PCT** and press **Enter**. **LIN PCT** only provides percent readings on the local display. The M1 engineering unit is used for remote communication of Measurement #1, even if **LIN PCT** is selected.

M1 EGU:

To configure pressure or flow engineering units for your display and transmission, go to **M1 EGU** with the **Next** button and press **Enter**. If **M1 MODE** is configured as **M1 LIN**, you are asked to specify one of the following pressure labels: **psi**, **inHg**, **ftH_2O**, **inH_2O**, **atm**, **bar**, **mbar**, **MPa**, **Pa**, **kPa**, **kg/cm^2**, **g/cm^2**, **mmHg**, **torr**, **mmH_2O**, **mH_2O**. or **hW60** (inH2O at 60°F). Your transmitter then automatically adjusts **M1EFAC** (engineering factor), **M1 URV** (upper range value), and **M1 LRV** (lower range value). **M1EOFF** is set to zero.

If **M1 MODE** is configured as **M1 SQ<1C, M1SQ<4L, or M1 SQ<nC**, you are asked to specify one of the following flow labels: **%flow, gal/s**, **gal/m**, **gal/h**, **gal/d**, **Mgal/d**, **ft^3/s**, **ft^3/m**, **ft^3/h**, **ft^3/d**, **lgal/s**, **lgal/m**, **lgal/h**, **lgal/d**, **l/s**, **l/m**, **l/h**, **Ml/d**, **m^3/s**, **m^3/m**, **m^3/h**, **m^3/d**, **bbl/s**, **bbl/m**, **bbl/h**, **bbl/d**, **T/h**, **lb/h**, **kg/h**, **Nm^3/h** (normal m^3/h), **Sm^3/h** (standard m^3/h), **Am^3/h** (actual m^3/h), or **MMSCFD** (million scfd). Check the **M1EFAC** (engineering factor) and, if necessary, adjust it as follows:

M1EFAC:

This parameter is used to input the numerical relationship between the measured span in pressure units and the displayed (and transmitted) span in flow units. It is the displayed URV in flow units (which is also the span in flow units since flow ranges must be zero-based).

Example:

For a 200 inH_2O transmitter with a measured range of 0 to 100 inH_2O and displayed range of 0 to 500 gal/m, **M1EFAC** = 500.

To edit the span in your configured flow units, press **Enter** at the prompt **M1EFAC**. Use the procedure "Entering Numerical Values" on page 38 to edit this parameter.

M1 URV:

To edit the upper range value, press **Enter** at the prompt **M1 URV**. Use the procedure "Entering Numerical Values" on page 38 section to edit this parameter.

M1 LRV:

Similar to **M1URV** immediately above.

NOTE
M1 LRV is bypassed if **M1 MODE** is configured as square root since **M1 LRV** must be zero.

M2 MODE:

M2 is a secondary measurement (SV) that is read by the HART Communicator and can be displayed on the optional display. You might use this feature to display M1 in flow units and M2 in comparable pressure units. To configure this parameter, go to **M2 MODE** with the **Next** button and press **Enter**. Use the **Next** button to select **M2 LIN** (linear), **M2SQ<1C** (square root with cutoff below 1% dp (M2 URV in linear units of dp), **M2SQ<4L** (square root with linear below 4% of dp (M2 URV in linear units of dp), or **M2SQ<nC** (square root with cutoff specified between 0 and 20% of the flow upper range value, M2 EFAC) and press **Enter**.

M2 EGU:

Similar to **M1 EGU**.

DISPLAY:

To display M1, M2, or to toggle between M1 and M2, go to **DISPLAY** with the **Next** button and press **Enter**. Use the **Next** button to select **SHOW M1**, **SHOW M2**, or **TOGGLE** and press **Enter**.

CALDATE:

This is not a required entry but can be used for record-keeping or plant maintenance purposes. To edit the calibration date, go to **CALDATE** with the **Next** button and press **Enter**. You then can change the day, month, and year. The display shows the last date with the day flashing. Use the **Next** button to step through the library of digits to select the desired day, then press **Enter**. Repeat this process for the month and year.

ENA PWD:

To enable or disable the password feature, go to **ENA PWD** with the **Next** button and press **Enter**. Use the **Next** button to select **NO PWDS** (password not required for either calibration or configuration), **CFGONLY** (password required to configure but not to calibrate), or **CFG+CAL** (passwords required to both configure and calibrate) and press **Enter**.

If you selected **CFG ONLY**, the display changes to **CFG PWD**. Press either the **Next** or **Enter** button. Use the **Next** button to step through the library of characters to select the

desired first character, then press **Enter**. Your selection is entered and the second character flashes. Repeat this procedure until you have created your password. If the password has less than six characters, use blanks for the remaining spaces. When you have configured the sixth space, the display advances to the next menu item.

If you selected **CFG+CAL**, the display changes to **CAL PWD**. To create the Calibration password, press either the **Next** or **Enter** button. Use the **Next** button to step through the library of characters to select the desired first character, then press **Enter**. Your selection is entered and the second character flashes. Repeat this procedure until you have created your password. If the password has less than six characters, use blanks for the remaining spaces. When you have configured the sixth space, the display advances to **CFG PWD**. Use the same procedure to create the configuration password.

NOTE
In normal operation, the CAL PWD allows access to only calibration mode. The CFG PWD allows access to both configuration and calibration.

CAUTION
Record your new password before saving changes to the database.

SET GDB:

If your transmitter database becomes corrupted and you receive an **INITERR** message upon startup, this function enables you to rewrite all calibration and configuration values with default values.

CAUTION
Any calibration and configuration values that you have entered will be lost. Therefore, **SET GDB** should **not** be selected if your transmitter is functioning normally.

Character Lists

Table 9. Alphanumeric Character List

Character List*	
@	'
, (comma)	(
A-Z (uppercase)	)
[	*
\	+
]	-
^	.
_ (underscore)	/
space	0-9
!	:
"	;
#	<
$	>
%	=
&	?

*List only applies to Model 275 HART Communicator not to optional local display.

Table 10. Numeric Character List

Character List
–
. (decimal point)
0 through 9

Error Messages

Table 11. Configuration Error Messages

Parameter	Condition Tested	Error Message	User Action
Password Protection	Password	BAD PWD	Bad password entered, use another.
Write Protection	Write Protection Enabled	REJECT	Displays when user attempts an action that is write protected.
M1 MODE (being changed to square root)	M1 LRV ≠ 0	LRVnot0	Square root mode with nonzero LRV is not valid. Change **M1 LRV** to 0.
	M1 URV < 0	URV<LRV	Square root mode with negative URV is not valid. Change **M1 URV** to positive value.
	OUT DIR is OUT REV	URV<LRV	Square root mode with URV < LRV is not valid. Change **M1 LRV** to 0 and **M1 URV** to positive value.
	M1EFAC < 0	-M1EFAC	Negative **M1 EFAC** is not valid. Change **M1 EFAC** to positive value.
	M2EFAC < 0	-M2EFAC	Negative **M2 EFAC** is not valid. Change **M2 EFAC** to positive value.
	M1EFAC = 0	0M1EFAC	**M1 EFAC** = 0 is not valid. Change **M1 EFAC** to positive value.
	M2EFAC = 0	0M2EFAC	**M2 EFAC** = 0 is not valid. Change **M2 EFAC** to positive value.
	M1EOFF ≠ 0 or M2EOFF ≠ 0	BADEOFF	Square root mode with nonzero **M1 EOFF** and **M2 EOFF** is not valid. Change **M1 EOFF** and **M2 EOFF** to 0.
M1EFAC	M1EFAC < 0	-M1EFAC	Negative **M1 EFAC** is not valid. Change **M1 EFAC** to positive value.
	M1EFAC = 0	0M1EFAC	**M1 EFAC** = 0 is not valid. Change **M1 EFAC** to positive value.
M1 URV	M1URV > max pressure in EGU	URV>FMX	Entered pressure is greater than maximum rated pressure of transmitter. Check entry. Verify EGUs.
	M1URV < min pressure in EGU	URV<FMN	Entered pressure is less than minimum rated pressure of transmitter. Check entry. Verify EGUs.
	M1 URV = M1 LRV	LRV=URV	Cannot set span to 0. Check entry. Check **M1 LRV**.
	M1 turndown exceeds limit	BADTDWN	Check entry. Check **M1 LRV**.
	URV <0 with M1 or M2 SqRt	URV<LRV	Square root mode with nonzero LRV is not valid. Change **M1 LRV** to 0.

Table 11. Configuration Error Messages (Continued)

Parameter	Condition Tested	Error Message	User Action
M1 LRV	M1LRV > max pressure in EGU	LRV>FMX	Entered pressure is greater than maximum rated pressure of transmitter. Check entry. Verify EGUs.
	M1LRV < min pressure in EGU	LRV<FMN	Entered pressure is less than minimum rated pressure of transmitter. Check entry. Verify EGUs.
	M1 URV = M1 LRV	LRV=URV	Cannot set span to 0. Check entry. Check **M1 URV**.
	M1 turndown exceeds limit	BADTDWN	Check entry. Check **M1 URV**.
M2 MODE (being changed to square root)	M1 LRV ≠ 0	LRVnot0	Square root mode with nonzero LRV is not valid. Change **M1 LRV** to 0.
	M1 URV < 0	URV<LRV	Square root mode with negative URV is not valid. Change **M1 URV** to positive value.
	OUT DIR is OUT REV	URV<LRV	Square root mode with URV < LRV is not valid. Change **M1 LRV** to 0 and **M1 URV** to positive value.
	M1EFAC < 0	-M1EFAC	Negative **M1 EFAC** is not valid. Change **M1 EFAC** to positive value.
	M2EFAC < 0	-M2EFAC	Negative **M2 EFAC** is not valid. Change **M2 EFAC** to positive value.
	M1EFAC = 0	0M1EFAC	**M1 EFAC** = 0 is not valid. Change **M1 EFAC** to positive value.
	M2EFAC = 0	0M2EFAC	**M2 EFAC** = 0 is not valid. Change **M2 EFAC** to positive value.
	M1EOFF ≠ 0 or M2EOFF ≠ 0	BADEOFF	Square root mode with nonzero **M1 EOFF** and **M2 EOFF** is not valid. Change **M1 EOFF** and **M2 EOFF** to 0.
M2EFAC	M2EFAC < 0	-M2EFAC	Negative **M2 EFAC** is not valid. Change **M2 EFAC** to positive value.
	M2EFAC = 0	0M2EFAC	**M2 EFAC** = 0 is not valid. Change **M2 EFAC** to positive value.

6. Maintenance

DANGER

For nonintrinsically safe installations, to prevent a potential explosion in a Division 1 hazardous area, de-energize transmitters before you remove threaded housing covers. Failure to comply with this warning could result in an explosion resulting in severe injury or death.

Error Messages

For error messages displayed on the HART Communicator refer to MI 020-366.

Parts Replacement

Parts replacement is generally limited to the electronics module assembly, housing assembly, sensor assembly, terminal block assembly, cover O-rings, and optional display. For part numbers relating to the transmitter and its options, see PL 009-005.

Replacing the Terminal Block Assembly

1. Turn off transmitter power source.
2. Remove the Field Terminals and the Electronics compartment covers by rotating them counterclockwise. Screw in cover lock if applicable.
3. Remove the digital display (if applicable) as follows: grasp the two tabs on the display and rotate it about 10° in a counterclockwise direction.
4. Remove the electronics module from the housing by loosening the two captive screws that secure it to the housing. Then pull the module out of the housing far enough to gain access to the cable connectors on the rear of the module.
5. Remove the four socket head screws securing the terminal block.
6. Disconnect the terminal block cable connector from the electronics module.
7. Remove the terminal block and the gasket under it.
8. Connect the new terminal block cable connector to the electronics module.
9. Install the new terminal block and new gasket and reinstall the four screws to 0.67 N·m (6 in·lb) in several even increments.
10. Reinstall the electronics module (and digital display if applicable).
11. Reinstall the covers onto the housing by rotating them clockwise to seat the O-ring into the housing and then continue to hand tighten until the each cover contacts the housing metal-to-metal. If cover locks are present, lock the cover per the procedure described in “Cover Locks” on page 29.
12. Turn on transmitter power source.

Replacing the Electronics Module Assembly

To replace the electronics module assembly, refer to Figure 40 and proceed as follows:

1. Turn off transmitter power source.
2. Remove the electronics compartment cover by rotating it counterclockwise. Screw in cover lock if applicable.
3. Remove the digital display (if applicable) as follows: grasp the two tabs on the display and rotate it about 10° in a counterclockwise direction. Pull out the display and disconnect its cable.
4. Remove the electronics module from the housing by loosening the two captive screws that secure it to the housing. Then pull the module out of the housing far enough to gain access to the cable connectors on the rear of the module.

CAUTION

The electronics module is “one assembly” at this point and is electrically and mechanically connected to topworks with a flexible ribbon signal cable, a 2-wire power cable, and in some cases, a cable for an external zero pushbutton. Do **not** exceed the slack available in these cables when removing the assembled module.

5. Unplug all cable connectors from the rear of the electronics module and place the module on a clean surface.
6. Predetermine connector orientation, then insert the cable connectors into the replacement module. Replace the module in the housing using care not to pinch the cables between the module and the housing. Tighten the two screws that secure the module to the housing.
7. Connect the cable from the digital display to the electronics module. Ensure that the O-ring is fully seated in the display housing. Then, holding the digital display by the tabs at the sides of the display, insert it into the housing. Secure the display to the housing by aligning the tabs on the sides of the assembly and rotating it about 10° in a clockwise direction.
8. Reinstall the cover onto the housing by rotating it clockwise to seat the O-ring into the housing and then continue to hand tighten until the cover contacts the housing metal-to-metal. If cover locks are present, lock the cover per the procedure described in “Cover Locks” on page 29.
9. Turn on transmitter power source.

The module replacement procedure is now complete.

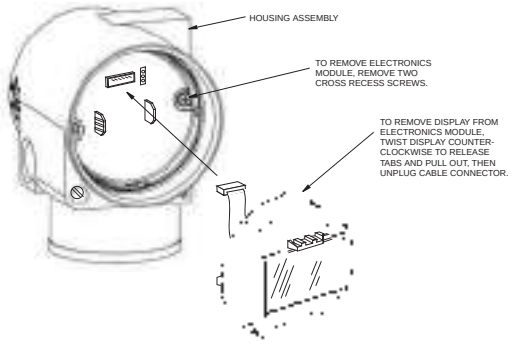

Figure 40. Replacing the Electronics Module Assembly and Display

Removing and Reinstalling a Housing Assembly

To remove and reinstall a housing assembly, refer to Figure 40 and proceed as follows:

1. Remove the electronics module per Steps 1 through 5 in the previous procedure.
2. If your housing has an anti-rotation screw, remove the red lacquer from the screw recess. Turn the screw three full turns counterclockwise.
3. If your housing has a retention clip, remove the red lacquer from the screw recess. Remove the screw completely, and slide the clip off the housing. Save the clip and screw for future use,
4. Remove the housing by rotating it counterclockwise (when viewed from the top). Use caution to avoid damaging the sensor cable.
5. Inspect the sensor O-ring for damage. If the O-ring is damaged, replace it with the appropriate O-ring (see parts list for your transmitter). Lubricate the O-ring with silicone lubricant (Foxboro Part Number 0048130 or equivalent). Verify that the O-ring is situated in the groove of the neck.

WARNING

Failure to reuse or install the proper O-ring for a CSA labeled product violates ANSI / ISA 12.27.01.

6. Feed the sensor cable through the housing neck into the electronics compartment.
7. Screw the housing onto the sensor neck until it bottoms. Do not over tighten. Be careful not to damage the sensor cable or dislodge the neck O-ring.

8. If your housing has an anti-rotation screw, engage the screw until it touches the sensor neck and back it off 1/8th turn. It is important that the screw is not touching the sensor. Fill the screw recess with red lacquer (Foxboro Part Number X0180GS or equivalent). The housing can then be rotated up to one full turn counterclockwise for optimum access.
9. If your housing has a retention clip, insert the clip over the boss in the housing neck so that the hole in the clip is aligned with the hole in the boss. Install the screw but do not tighten. Rotate the housing up to one full turn counterclockwise for optimum access. Tighten the retention clip screw and fill the screw recess with red lacquer (Foxboro Part Number X0180GS or equivalent). The housing can still be rotated for optimum access.
10. Reinstall the electronics module per Steps 6 through 9 in the previous procedure.

Adding the Optional Display

To add the optional display, refer to Figure 40 and proceed as follows:

1. Turn off transmitter power source.
2. Remove the electronics compartment cover by rotating it counterclockwise. Screw in cover lock if applicable.
3. Plug the display into the receptacle at the top of the electronics assembly.
4. Ensure that the O-ring is seated in its groove in the display housing. Then insert the display into the electronics compartment by grasping the two tabs on the display and rotating it about 10° in a clockwise direction.
5. Install the new cover (with a window) onto the housing by rotating it clockwise to seat the O-ring into the housing and then continue to hand tighten until the cover contacts the housing metal-to-metal. If cover locks are present, lock the cover per the procedure described in "Cover Locks" on page 29.
6. Turn on transmitter power source.

Replacing the Sensor Assembly

To replace the sensor assembly, refer to Figures 41 and 42 and proceed as follows:

1. Remove the electronics module as described above.
2. Remove the housing as described above.
3. Remove the process covers from sensor by removing two hex head bolts.
4. Replace the gaskets in the process covers.
5. Install the process covers and housing on the new sensor. Torque cover bolts to 100 N·m (75 lb·ft) in several even increments. Torque values are 68 N·m (50 lb·ft) when 316 ss bolts are specified; 75 N·m (55 lb·ft) when B7M bolts are specified.
6. Reinstall electronics module.
7. Pressure test the sensor and process cover assembly by applying a hydrostatic pressure of 150% of the maximum static and overrange pressure rating to both sides of the process cover/sensor assembly simultaneously through the process connections. Hold

pressure for one minute. There should be no leakage of the test fluid through the gaskets. If leakage occurs, retighten the cover bolts per Step 5 (or replace the gaskets) and retest.

CAUTION
Perform hydrostatic test with a liquid and follow proper hydrostatic test procedures.

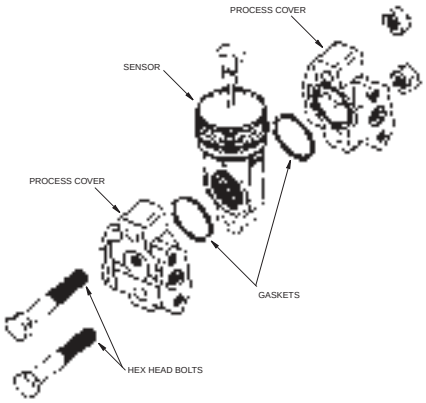

Figure 41. Replacing the Sensor Assembly

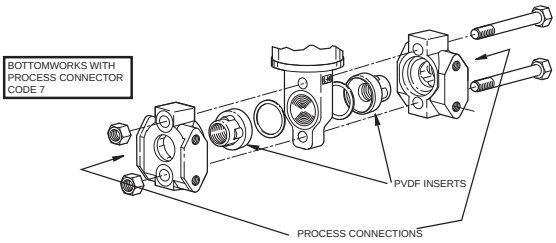

Figure 42. Replacing the Sensor Assembly (pvdf Inserts)

Rotating Process Covers for Venting

As received, your IASPT Transmitter provides sensor cavity draining without the need for side drain connections, regardless of whether the transmitter is mounted vertically or horizontally. Sensor cavity venting is provided by mounting the transmitter horizontally or with the optional vent screw (-V). However, if you did not specify this option, you can still achieve venting (instead of draining) with vertical mounting by rotating the process covers. See Figure 43.

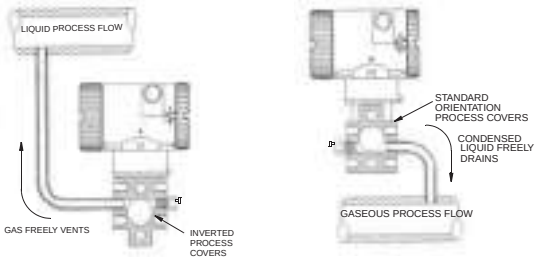

Figure 43. Sensor Cavity Venting and Draining

To rotate the process covers, refer to Figure 41 and proceed as follows:

1. Turn off the transmitter power source and remove the transmitter from the process.
2. Remove the process covers from sensor by removing two hex head bolts.

3. Replace gaskets in process covers.
4. Rotate the process covers so that the longer tab is at the bottom.
5. Reinstall process covers and bolts. Torque cover bolts to 100 N·m (75 lb·ft) in several even increments. Torque values are 68 N·m (50 lb·ft) when 316 ss bolts are specified; 75 N·m (55 lb·ft) when B7M bolts are specified.
6. Pressure test the sensor and process cover assembly by applying a hydrostatic pressure of 150% of the maximum static and overrange pressure (see "Standard Specifications" on page 5) to both sides of the process cover/sensor assembly simultaneously through the process connections. Hold pressure for one minute. There should be no leakage of the test fluid through the gaskets. If leakage occurs, retighten the cover bolts per Step 4 or replace the gaskets and retest.

CAUTION
Perform hydrostatic test with a liquid and follow proper hydrostatic test procedures.

Index

C
Calibration 41
- Using a HART Communicator 46
- Using a PC20 46
- Using a PC50 Configurator 46
- Using the Local Display 46

Calibration Notes 41
Calibration Setup 43
Configuration 53
- Using a HART Communicator 54
- Using a PC20 Configurator 54
- Using a PC50 Configurator 54
- Using the Local Display 54

Cover Locks 29

D
Display, Positioning the 28

E
Error Messages
- Calibration 51
- Configuration 65
- Operation 40

H
Housing, Positioning the 28

I
Identification 3
Installation 15

M
Maintenance 67
Mounting 15

O
Operation Via Local Display 37

P
Parts Replacement 67
Piping, Installation of Flow Measurement 24

R
Reference Documents 1
Reranging 39

S
Seal Liquid, Filling the System with 27
Specifications
- Product Safety 10
- Standard 5

W
Wiring 29
Write Protect Jumper, Setting the 29

Z
Zero Adjustment Using External Zero Button 49

ISSUE DATES
DEC 2001
OCT 2003
APR 2004
FEB 2005
JUN 2005
FEB 2006
AUG 2006
OCT 2007
JUL 2008
MAY 2010

Vertical lines to the right of text or illustrations indicate areas changed at last issue date.

Invensys Operations Management
5601 Granite Parkway Suite 1000
Plano, TX 75024
United States of America
http://www.iom.invensys.com

Global Customer Support
Inside U.S.: 1-866-746-6477
Outside U.S.:1-508-549-2424 or contact your local Invensys representative.
Email: support@invensys.com
Website: http://support.ips.invensys.com

Invensys, Foxboro, and I/A Series are trademarks of Invensys plc, its subsidiaries, and affiliates.
All other brand names may be trademarks of their respective owners.

Copyright 2001-2010 Invensys Systems, Inc.
All rights reserved

MB 100 0510

OPERATING, STORAGE, AND TRANSPORTATION CONDITIONS

VOGT DDT&S ITEM#23 VOGT PO#V0008697
IGP10-T22(D&E)1F-H1T VOGT PROJECT#V17491
W/CERT-E & M25HPS-44-XP-AM VOGT PROJECT NAME: AMATA ABPR5

OPERATING, STORAGE, AND TRANSPORTATION CONDITIONS

Influence	Reference Operating Conditions	Normal Operating Conditions (a) (b)	Operative Limits (a) (c)	Storage and Transportation Limits
Process Connection Temp. • with Silicone Fill Fluid • with Inert Fill Fluid	• 24 ± 2°C (75 ± 3°F) • 24 ± 2°C (75 ± 3°F)	• -29 to + 82°C (-20 to +180°F) • -29 to + 93°C (-20 to +199°F)	• -40 and +121°C (d) (-40 and +250°F) • -29 and +121°C (-20 and +250°F)	• Not Applicable • Not Applicable
Electronics Temperature • with LCD Indicator (e)	• 24 ± 2°C (75 ± 3°F) • 24 ± 2°C (75 ± 3°F)	• -29 to + 82°C (e) (-20 to +180°F) • -20 to + 82°C (e) (-4 to +180°F)	• -40 and +85°C (e) (-40 and +185°F) • -20 and +85°C (e) (-20 and +185°F)	• -54 and +85°C (-65 and +185°F) • -54 and +85°C (-65 and +185°F)
Relative Humidity (f)	55 ± 10%	0 to 100%	0 and 100%	0 and 100% Noncondensing
Supply Voltage – mA Output	30 ± 0.5 V dc	11.5 to 42 V dc (g)	11.5 and 42 V dc (g)	Not Applicable
Output Load – mA Output	600 Ω	0 to 1400 Ω	0 and 1400 Ω	Not Applicable
Vibration	1 m/s² (0.1 "g")	0.3 mm (0.28 in) Double Amplitude from 5 to 15 Hz with Aluminum Housing and from 5 to 9 Hz with 316 ss Housing 1 to 20 m/s² (0 to 2 "g") from 15 to 500 Hz with Aluminum Housing and 1 to 10 m/s² (0 to 1 "g") from 9 to 500 Hz with 316 ss Housing		11 m/s² (1.1 "g") from 2.5 to 5 Hz (In Shipping Package)
Mounting Position	Upright (h)	Upright (h)	No Limit	Not Applicable

a. Temperature limits are tested as follows for ANSI and DIN Transmitters:
(c) 0 and 40°C (32 and 140°F) when Structure Code RMTKPNOF Housing are used, and
(c) and 50°C (32 and 140°F) when DIN Construction Options DGRAEBEB are used.
b. Normal Operating Conditions and Operative Limits are defined per ANSI/ISA S71.03 (R1992).
c. Selection of Option J extends the low temperature operative limit of transmitters with silicone filled sensors down to -50°C (-58°F). Performance is not assured below -29°C. Sensor damage may occur if process is frozen.
d. Although the LCD will not be damaged at any temperature within the "Storage and Transportation Limits" updates will be slowed and readability decreased at temperatures outside the "Normal Operating Conditions".
e. Refer to the Electrical Safety Specifications section for a restriction in ambient temperature limits with certain electrical approvals/certifications.
f. With ignoring covers tel and conduit entrances sealed.
g. 11.5 V dc can be reduced to 11.1 V dc by using a plug in shorting bar; see "Physical Specifications" section.
h. Sensor process isolation diaphragms in a vertical plane to ±30°Max and 90°Max Horizontal.

51HAH10CP002 52HAH10CP002
51HAH10CP001 52HAH10CP001
51LAE10CP001 52LAE10CP001
51HAD10CP001 52HAD10CP001
51HAD10CP002 52HAD10CP002
51LAB10CP001 52LAB10CP001
51HAH50CP001 52HAH50CP001
51HAD50CP001 52HAD50CP001
51HAD50CP002 52HAD50CP002
51LAB50CP001 52LAB50CP001
05LAA11CP001

VOGT DDT&S ITEM#23 VOGT PO#V0008697
IDP10-T22(A,B,&C)01F-M3H1T PROJECT#V17491
W/CERT-E & M4THP2-4-XP PROJECT NAME#AMATA ABPR5

OPERATING, STORAGE & TRANSPORTATION CONDITIONS

OPERATING, STORAGE, AND TRANSPORTATION CONDITIONS

Influence	Reference Operating Conditions	Normal Operating Conditions (a)	Operative Limits (a)	Storage and Transportation Limits
Process Connection Temp. • with Silicone Fill Fluid • with Fluorinert Fill Fluid	• 24 ± 2°C (75 ± 3°F) • 24 ± 2°C (75 ± 3°F)	• -29 to + 82°C (-20 to +180°F) • -29 to + 82°C (-20 to +180°F)	• -40 and +121°C (d) (-40 and +250°F) • -29 and +121°C (-20 and +250°F)	• Not Applicable • Not Applicable
Electronics Temperature • with LCD Indicator (c)	• 24 ± 2°C (75 ± 3°F) • 24 ± 2°C (75 ± 3°F)	• -29 to + 82 °C (g) (-20 to +180 °F) (g) • -20 to + 82 °C (g) (-4 to +180 °F) (g)	• -40 and +85°C (g) (-40 and +185°F) (g) • -20 and +85°C (g) (-20 and +185°F) (g)	• -54 and +85°C (-65 and +185°F) • -54 and +85°C (-65 and +185°F)
Relative Humidity (d)	55 ± 10%	0 to 100%	0 and 100%	0 and 100% Noncondensing
Supply Voltage – mA Output	30 ± 0.5 V dc	11.5 to 42 V dc (e)	11.5 and 42 V dc (e)	Not Applicable
Output Load – mA Output	600 Ω	0 to 1400 Ω	0 and 1400 Ω	Not Applicable
Vibration	1 m/s² (0.1 "g")	0.3 mm (0.28 in) Double Amplitude from 5 to 15 Hz with Aluminum Housing and from 5 to 9 Hz with 316 ss Housing 1 to 20 m/s² (0 to 2 "g") from 15 to 500 Hz with Aluminum Housing and 1 to 10 m/s² (0 to 1 "g") from 9 to 500 Hz with 316 ss Housing		11 m/s² (1.1 "g") from 2.5 to 5 Hz (In Shipping Package)
Mounting Position	Upright or Horizontal (f)	Upright or Horizontal (f)	No Limit	Not Applicable

(a) When Traditional Structure Codes RMTKPNOF that's a Hx and is used process covers are used, maximum overrange is 1.1 MPa (160 psi), and temperature limits are 0 and 40°C (32 and 104°F), when DIN Construction Options DGRAEBEB are used, temperature limits are 0 and 50°C (32 and 140°F).
(b) Selection of Option J extends the low temperature operative limit of transmitters with silicone filled sensors down to -50°C (-58°F).
(c) Although the LCD will not be damaged at any temperature within the "Storage and Transportation Limits", updates will be slowed and readability decreased at temperatures outside the "Normal Operating Conditions".
(d) With ignoring cover on and conduit entrances sealed.
(e) 11.5 V dc can be reduced to 11.1 V dc by using a plug in shorting bar; see "Supply Voltage Requirements" section and Figure 24.
(f) Sensor process isolation diaphragms in a vertical plane.
(g) Refer to the Electrical Safety Specifications section for a restriction in ambient temperature limits with certain electrical approvals/certifications.

51LAE10CF001 52LAE10CF001
51LAB31CF002 52LAB32CF002
51LAB61CF002 52LAB62CF002
51LAA10CF001 52LAA10CF001
51HAD10CL001 52HAD10CL001
51HAD10CL002 52HAD10CL002
51HAD10CL003 52HAD10CL003
51HAD50CL001 52HAD50CL001
51HAD50CL002 52HAD50CL002
51HAD50CL003 52HAD50CL003
05LAA10CL001 52LAE10CP002
05LAA10CL002
51LAE10CP002

Contents

Figures ..... **v**

Tables ..... **vii**

1. Introduction **1**
General Description 1
Reference Documents 1
Transmitter Identification 3
Standard Specifications 5
Product Safety Specifications 11

2. Installation **15**
Transmitter Mounting 15
Sanitary Process Connection 16
Pulp and Paper Process Connection 17
Sleeve Type Connector 17
Threaded Type Connector 18
Typical Transmitter Piping 19
Positioning the Housing 20
Positioning the Display 21
Cover Locks 21
Wiring 21
Accessing Transmitter Field Terminals 22
Wiring the Transmitter to a Control Loop 22
Multidrop Communication 25

3. Operation Via Local Display **27**
Entering Numerical Values 28
Viewing the Database 29
Viewing the Calibrated Pressure Range 29
Testing the Display 29

4. Calibration **31**
General Calibration Notes 31
Calibration Setup 33
Setup of Electronic Equipment 33
Field Calibration Setup 33
Bench Calibration Setup 34
Calibration Using a PC20 34
Calibration Using a HART Communicator 34
Calibration Using the Optional Local Display 35
Zero Adjustment Using External Zero Button 39
Error Messages 40

5. Configuration **41**
Configurable Parameters 41
Configuration Using a PC20 41

Configuration Using a HART Communicator 42
Configuration Using the Optional Local Display 42
Character Lists 48
Error Messages 49

6. Maintenance **51**
Error Messages 51
Parts Replacement 51
Replacing the Terminal Block Assembly 51
Replacing the Electronics Module Assembly 52
Removing and Reinstalling a Housing Assembly 53
Adding the Optional Display 53
Replacing the Sensor Assembly 54

Figures

1 Transmitter Identification 3
2 Top Level Structure Diagram 4
3 Minimum Allowable Absolute Pressure vs. Process Temperature with Fluorinert Fill Fluid 8
4 IAP10 and IGP10 Transmitter Mounting 15
5 Mounting of Transmitter with Sanitary Tri-Clamp Connection 16
6 Mounting of Transmitter with Sanitary Mini Tank Spud Seal 16
7 Welding Procedure 17
8 Mounting of Transmitter with Sleeve Type Pulp and Paper Process Connection 18
9 Mounting of Transmitter with Threaded Type Pulp and Paper Process Connection 19
10 Typical Transmitter Piping 19
11 Hot Process Piping 20
12 Housing Set Screw Location 21
13 Cover Lock Location 21
14 Accessing Field Terminals 22
15 Identification of Field Terminals 22
16 Supply Voltage and Loop Load 23
17 Loop Wiring Transmitters 24
18 Wiring Several Transmitters to a Common Power Supply 25
19 Typical Multidrop Network 25
20 Local Display Module 27
21 Top Level Structure Diagram 28
22 Display Test Segment Patterns 30
23 4 to 20 mA Output Calibration Setup of Electronic Equipment 33
24 Transmitter Piping 34
25 Bench Calibration Setup 34
26 Calibration Structure Diagram 37
27 Calibration Structure Diagram (Continued) 38
28 Configuration Structure Diagram 44
29 Configuration Structure Diagram (Continued) 45
30 Configuration Structure Diagram (Continued) 46
31 Replacing the Electronics Module Assembly and Display 53

Tables

1 Reference Documents 1
2 Minimum Loop Load and Supply Voltage Requirements 10
3 Electrical Safety Specifications 12
4 Calibration Menu 35
5 Calibration Error Messages 40
6 Configurable Parameters 41
7 Configuration Menu 42
8 Alphanumeric Character List 48
9 Numeric Character List 49
10 Configuration Error Messages 49

1. Introduction

General Description

The IAP10-T and IAP20-T Intelligent Absolute Pressure and IGP10-T, IGP20-T, IGP25-T and IGP50-T Intelligent Gauge Pressure Transmitters measure pressure by applying the pressure to a silicon strain gauge microsensor within the sensor assembly. This microsensor converts the pressure to a change in resistance, and the resistance change is converted to a 4 to 20 mA or digital signal proportional to the pressure. This measurement signal is transmitted to remote receivers over the same two wires that supply power to the transmitter electronics. These wires also carry two-way data signals between the transmitter and remote communication devices.

The transmitter allows direct analog connection to common receivers while still providing full Intelligent Transmitter Digital Communications using a HART Model 275 Communicator (Foxboro Model HT991).

The IAP10, IGP10 can be supplied with direct connected pressure seals; the IAP10, IGP10, IAP20, and IGP20 with remote pressure seals.

For more detailed information on the principle of operation of the transmitter, refer to document TI 037-096, available from Foxboro.

Reference Documents

Table 1. Reference Documents

Document	Description
Dimensional Prints	
DP 020-217	Dimensional Print – IAP10 and IGP10 Pressure Transmitters with Pulp and Paper Process Connections
DP 020-218	Dimensional Print – IAP10 and IGP10 Pressure Transmitters with Sanitary Tri_Clamp Process Connections
DP 020-219	Dimensional Print – IAP10 and IGP10 Pressure Transmitters with Sanitary Mini Tank Spud Process Connections
DP 020-342	Dimensional Print – PSFLT Pressure Seals
DP 020-343	Dimensional Print – PSFPS and PSFES Pressure Seals
DP 020-345	Dimensional Print – PSFAR Pressure Seals
DP 020-346	Dimensional Print – PSFAD Pressure Seals
DP 020-347	Dimensional Print – PSTAR Pressure Seals
DP 020-348	Dimensional Print – PSTAD Pressure Seals
DP 020-349	Dimensional Print – PSISR Pressure Seals
DP 020-350	Dimensional Print – PSISD Pressure Seals
DP 020-351	Dimensional Print – PSSCR Pressure Seals
DP 020-353	Dimensional Print – PSSCT Pressure Seals
DP 020-354	Dimensional Print – PSSSR Pressure Seals
DP 020-355	Dimensional Print – PSSST Pressure Seals
DP 020-446	Dimensional Print – IDP10, IDP25, and IDP50 Differential Pressure Transmitters
DP 020-447	Dimensional Print – IAP10 and IAP20 Absolute Pressure and IGP10, IGP20, IGP25, and IGP50 Gauge Pressure Transmitters
DP 022-335	Dimensional Print – Model CO Compact Orifice
Parts Lists	
PL 006-172	Parts List – Model CO Compact Orifice

Table 1. Reference Documents (Continued)

Document	Description
PL 009-005	Parts List – IDP10 Differential Pressure Transmitter
PL 009-006	Parts List – IAP10 Absolute and IGP10 Gauge Pressure Transmitters
PL 009-007	Parts List – IAP20 Absolute and IGP20 Gauge Pressure Transmitters
PL 009-010	Parts List – IGP10 High Gauge Pressure Transmitter
PL 009-011	Parts List – IGP25 Gauge Pressure Transmitter
PL 009-012	Parts List – IGP50 Gauge Pressure Transmitter
PL 009-013	Parts List – IDP25 Differential Pressure Transmitter
PL 009-014	Parts List – IDP50 Differential Pressure Transmitter
Instructions Related To FoxCom Communications	
B0193XX	Checklist for FoxCom Measurement Integration
MI 020-400	Instruction – I/A Series Hand-Held Terminal Reference Operating Guide
MI 020-466	Instruction – I/A Series Model HHT Hand-Held Terminal
MI 020-476	Instruction – Calibration and Configuration Using an HHT Hand-Held Terminal
MI 020-479	Instruction – PC10 Intelligent Transmitter Configurator
MI 020-495	Instruction – PC20 Intelligent Transmitter Configurator
MI 020-408	Instruction – I/A Series Intelligent Pressure Transmitters With Digital FoxCom or 4 to 20 mA Output Signal “Read Me First” Reference Guide
Instructions Related To HART Communications	
MI 020-365	Instruction – I/A Series Intelligent Pressure Transmitters With HART Communications “Read Me First” Reference Guide
MI 020-366	Instruction – I/A Series Intelligent Pressure Transmitters Operation, Configuration, and Calibration Using a HART Communicator
MI 020-484	HART Model 275 Communicator Messages
Instructions Related To FOUNDATION Fieldbus Communication	
MI 020-360	Instruction, Wiring Guidelines for Foxboro I/A Series FOUNDATION fieldbus Transmitters
MI 020-368	Instruction – Intrinsic Safety Connection Diagrams (Fieldbus)
Miscellaneous Information	
MI 020-328	Instruction – Bubble Type Installation for Liquid Level
MI 020-329	Instruction – High Accuracy Flow Measurement
MI 020-350	Instruction – Wiring Guidelines for Foxboro Intelligent Transmitters
MI 020-369	Instruction – Pressure Seals
MI 020-427	Instruction – Intrinsic Safety Connection Diagrams (4-20 mA, FoxCom, and HART)
MI 022-137	Instruction – Bypass Manifolds - Installation and Maintenance
MI 022-335	Instruction – Model CO Compact Orifice
Technical Information	
TI 001-50a	Technical Information – Liquid Density Measurement
TI 001-051	Technical Information – Liquid Interface Measurement
TI 001-052	Technical Information – Liquid Level Measurement
TI 37-75b	Technical Information – Transmitter Material Selection Guide
TI 037-096	Technical Information – I/A Series Pressure Transmitters

Transmitter Identification

See the figure below for transmitter data plate contents. For a complete explanation of the Model Number code, see the parts list. For Model Codes -D, -F, and -T, the firmware version is identified on the top line of the display when **VIEW DB** (View Database) is selected in the top level structure; for Codes -A, -I, and -V, it is shown on the top line of the display when the transmitter is powered.

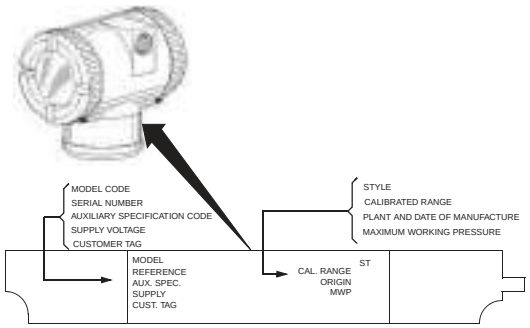

Figure 1. Transmitter Identification

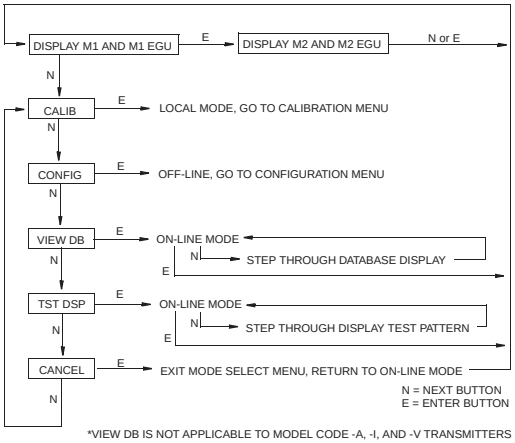

*VIEW DB IS NOT APPLICABLE TO MODEL CODE -A, -I, AND -V TRANSMITTERS

Figure 2. Top Level Structure Diagram

Standard Specifications

Operative Limits

Influence	Operative Limits
Sensor Body Temperature[a] Silicone Fill Fluid Fluorinert Fill Fluid Neobee Fill Fluid pvdf Inserts	 -46 and +121°C (-50 and +250°F) -29 and +121°C (-20 and +250°F) -18 and +121°C (0 and 250°F) -7 and +82°C (20 and 180°F)
Electronics Temperature With LCD Display	-40 and +85°C (-40 and +185°F) -40 and +85°C (-40 and +185°F)[b]
Relative Humidity	0 and 100%
Supply Voltage	11.5 and 42 V dc
Output Load[c]	0 and 1450 ohms
Mounting Position	No Limit

(a) Refer to MI 020-369 for temperature limits with pressure seals.
(a) Display updates are slowed and readability decreased at temperatures below -20°C (-4°F).
(b) 250 Ω minimum load is required for communication with a HART Communicator.

Span and Range Limits

Transmitter Model	Span Limit Code	Span Limits[a]	Range Limits[a]
IAP20, IGP20	A[b,c]	0.12 and 7.5 kPa 0.5 and 30 inH_2O 12 and 750 mmH_20	-7.5 and +7.5 kPa -30 and +30 inH_2O -750 and +750 mmH_20
	B	0.87 and 50 kPa 3.5 and 200 inH_2O 87 and 5000 mmH_2O	-50 and +50 kPa -200 and +200 inH_2O -5000 and +5000 mmH_2O
	C	0.007 and 0.21 MPa 28 and 840 inH_2O	-0.1 and +0.21 MPa -410 and +840 inH_2O
	D	0.07 and 2.1 MPa 10 and 300 psi 23 and 690 ftH_2O	-0.1 and +2.1 MPa -14.7 and +300 psi -34 and +690 ftH_2O
	E	0.7 and 21 MPa 100 and 3000 psi	-0.1 and +21 MPa -14.7 and +3000 psi
IAP10, IGP10	C	7 and 210 kPa 28 and 840 inH_2O	0 and 210 kPa 0 and 840 inH_2O
	D	0.07 and 2.1 MPa 10 and 300 psi 23 and 690 ftH_2O	0 and 2.1 MPa 0 and 300 psi 0 and 690 ftH_2O
	E	0.7 and 21 MPa 100 and 3000 psi	0 and 21 MPa 0 and 3000 psi
	F[c,d]	14 and 42 MPa 2000 and 6000 psi	0 and 42 MPa 0 and 6000 psi
	G[c,d]	35 and 105 MPa 5000 and 15,000 psi	0 and 105 MPa 0 and 15,000 psi
	H[c,d]	70 and 210 MPa 10,000 and 30,000 psi	0 and 210 MPa 0 and 30,000 psi

(a) Values listed are in absolute or gauge pressure units, as applicable.
(b) Applicable to IGP20 only.
(c) Not available with pressure seals.
(d) Applicable to IGP10 only.

Maximum Overrange Pressure and Proof Pressure (Models IAP10 and IGP10)

Transmitter Model	Span Limit Code	Maximum Overrange Pressure[a]	Proof Pressure[a][c]
IAP10, IGP10	C	0.31 MPa (45 psi)	827 kPa (120 psi)
	D	3.1 MPa (450 psi)	8.27 MPa (1200 psi)
	E	31 MPa (4500 psi)	79.3 MPa (11,500 psi)
	F[b]	58 MPa (8400 psi)	152 MPa (22,000 psi)
	G[b]	137 MPa (19,500 psi)	252 MPa (36,000 psi)
	H[b]	231 MPa (33,000 psi)	567 Mpa (81,000 psi)

(a) Values listed are in absolute or gauge pressure units, as applicable.
(b) Applicable to IGP10 only.
(c) Meets ANSI/ISA Standard S82.03-1988

CAUTION
1. Exceeding the overrange pressure limit for the transmitter can cause damage to the transmitter, degrading its performance.
2. The transmitter may be nonfunctional after application of the proof pressure.

Maximum Overrange Pressure and Proof Pressure (Models IAP20 and IGP20)

Transmitter Configuration (Bolting Material)[c]	Maximum Static and Overrange Pressure Rating[a,e]		Proof Pressure Rating[b]	
	MPa	Psi	MPa	Psi
Standard (B7 steel), Option "-B2" (17-4 PH ss), Option "-D3" or "-D7"	25	3625	100	14500
Option "B1" (316 ss) or Option "-D5"	15	2175	60	8700
Option "B3" (B7M)	20	2900	70	11150
Option "-D1"	16	2320	64	9280
Option "-D2", "-D4", "-D6", or "-D8"[d]	10	1500	40	6000
Option "D9" (17-4 PH ss)	40	5800	100	14500

(a) Either side can be at higher pressure during overrange.
(b) Meets ANSI/ISA Standard S82.03-1988.
(c) -D1 = DIN Single ended process cover with M10 B7 bolting.
-D2 = DIN Double ended process cover with M10 B7 bolting
-D3 = DIN Single ended process cover with 7/16 in B7bolting.
-D4 = DIN Double ended process cover with 7/16 in B7bolting.
-D5 = DIN Single ended process cover with 7/16 in 316 ss bolting.
-D6 = DIN Double ended process cover with 7/16 in 316 ss bolting.
-D7 = DIN Single ended process cover with 7/16 in 17-4 ss bolting.
-D8 = DIN Double ended process cover with 7/16 in 17-4 ss bolting.
-D9 = DIN Single ended process cover with 7/16 in 17-4 ss bolting.
(d) Limited to operating temperatures ranging from 0 to 60°C (32 to 140°F).
(e) When Structure Codes 78/79 are used (pvdf insert in the Hi side process cover), the maximum overrange is 2.1 MPa (300 psi) and temperature limits are -7 and +82°C (20 and 180°F).

CAUTION
1. Exceeding the overrange pressure limit for the transmitter can cause damage to the transmitter degrading its performance.
2. The transmitter may be nonfunctional after application of the proof pressure.

Elevated Zero and Suppressed Zero

For applications requiring an elevated or suppressed zero, the maximum span and the upper and lower range limits of the transmitter can not be exceeded.

NOTE
Elevated zero applications are not possible with the IAP10 and IGP10 transmitters.

Sensor Fill Fluid

Silicone Oil (DC 200) or Fluorinert (FC-43)
Neobee M-20 (for transmitters with sanitary process connection)
Not applicable with IGP10 Span Limit Codes G and H.

Minimum Allowable Absolute Pressure vs. Process Temperature

IGP10: Not Applicable.
IAP10, IAP20, and IGP20: With Silicone Fill Fluid: up to 120 °C (250 °F) at full vacuum.
Wiith Fluorinert Fill Fluid: Refer to the figure below.

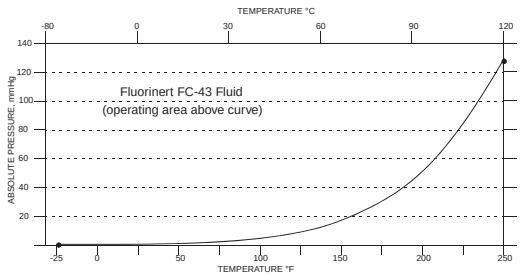

Figure 3. Minimum Allowable Absolute Pressure vs. Process Temperature with Fluorinert Fill Fluid

Mounting Position

The transmitter can be mounted in any orientation. It can be directly mounted to the process with either the direct connected or pipe mounted designs. The housing can be rotated up to one full turn to any desired position for access to adjustments, display, or conduit connections. See "Positioning Housing" in Installation section. The display (if present) can also be rotated in the housing to any of four different positions at 90° increments. See "Positioning Display" in Installation section.

NOTE
Position effect zero shift for all calibrated spans can be eliminated by readjusting zero output after installation.

Approximate Mass

IAP10, IGP10:	1.5 kg (3.3 lb)
IAP20, IGP20 (w/o process connector):	3.5 kg (7.8 lb)
IAP20 (with process connector):	3.8 kg (8.5 lb)
IGP20 (with process connector):	4.2 kg (9.2 lb)
With Optional 316 ss Housing:	Add 1.1 kg (2.4 lb)
With Pressure Seals:	Varies with seal used

Process Connections

IAP10 and IGP10 Transmitters

IAP10 and IGP10 transmitters can be directly connected to the process using its 1/2 NPT external thread or optional G 1/2 B connection. If the optional mounting bracket is used, the transmitter can be connected to the process via the 1/2 NPT external thread, 1/4 NPT internal thread, or optional G 1/2 B connection.

Using the optional mounting bracket, IGP10 transmitters with Span Limit Code G can connect to the process via the 1/4 NPT internal thread, G 1/2 B external thread, or Autoclave F-250-C with 9/16-18 internal gland thread.

Using the optional mounting bracket, IGP10 transmitters with Span Limit Code H are connected using the Autoclave F-250-C with 9/16-18 internal gland thread.

IAP10 and IGP10 Transmitters with a sanitary process connection connect to the process via a Tri-Clamp process connector, a threaded connection, or a mini tank spud.

IAP10 and IGP10 Transmitters with a pulp and paper process connection connect to the process via a threaded or sleeve type connection.

IAP20 and IGP20 Transmitters

IAP20 and IGP20 transmitters are connected to the process via a 1/4 NPT thread or any one of a number of optional process connectors.

Process Wetted Materials

IAP10 or IGP10	
Diaphragm:	Co-Ni-Cr, 316L ss, or Hastelloy C
Process Connectors:	316L ss or Hastelloy C
IGP10 with Span Limit Code G :	15-5 ss or Inconel X-750
IGP10 with Span Limit Code H:	13-8 Mo ss
IAP20 or IGP20	
Diaphragm:	Co-Ni-Cr, 316L ss, Hastelloy C, gold-plated 316L ss, Monel, or tantalum
Covers and Process Connectors:	316 ss, carbon steel, Hastelloy C, or Monel, or pvdf inserts
Pressure Seals:	Refer to MI 020-369
Sanitary Process Connections:	316L ss, Hastelloy C
Pulp and Paper Process Connections	316L ss, Hastelloy C

Reference Pressure Side (Low Pressure Side) Materials

IGP10: Silicon, Pyrex, RTV, 316L ss, and Ceramic
IGP20: 316L ss diaphragm and 316 ss cover
Not applicable with IGP10 Span Limit Codes G and H

Process Pressure and Temperature Limits for Pressure Seals

Refer to MI 020-369

Electrical Connections

Field wires enter through PG 13.5 or 1/2 NPT threaded entrances on either side of the electronics housing. Leads terminate under screw terminals and washers on the terminal block in the field terminal compartment. To maintain RFI/EMI, environmental, and explosionproof ratings, unused conduit connection must be plugged with metal plug (provided), inserted to five full turns.

Field Wiring Reversal

Accidental reversal of field wiring will not damage the transmitter, provided the current is limited to 1 A or less by active current limiting or loop resistance. Sustained currents of 1 A will not damage the electronics module or sensor but could damage the terminal block assembly and external instruments in the loop.

Adjustable Damping

The transmitter response time is normally 1.0 second or the electronically adjustable setting of 0.00 (none), 0.25, 0.50, 1, 2, 4, 8, 16, or 32 seconds, whichever is greater, for a 90% recovery from an 80% input step as defined in ANSI/ISA S51.1.

Output Signal

4 to 20 mA dc linear or 4 to 20 mA dc square root; software selectable. The output is remotely configurable from the HART Communicator and locally configurable with the pushbuttons on the display.

NOTE
Only 4 to 20 mA linear output on absolute pressure, gauge pressure, and flange level transmitters.

Zero and Span Adjustments

Zero and span are adjustable from the HART Communicator. They are also adjustable at the transmitter using the display. An optional external self-contained moisture sealed pushbutton assembly allows local resetting of zero without removing the housing cover.

Power-up Time

Less than 2.0 seconds for output to reach the first valid measurement, then at the electronic damping rate to reach the final measured variable value.

Supply Voltage

Power supply must be capable of providing 22 mA when the transmitter is configured for 4 to 20 mA output. Ripple of up to 2 V pp (50/60/100/120 Hz) is tolerable, but instantaneous voltage must remain within specified range.

The supply voltage and loop load must be within specified limits. This is explained in detail in "Wiring" in the Installation section. A summary of the minimum requirements is listed in the following table.

Table 2. Minimum Loop Load and Supply Voltage Requirements

	HART Communication	No HART Communication
Minimum Resistance	250 Ω	0
Minimum Supply Voltage	17 V	11.5 V

Electrical Ground Connections

The transmitter is equipped with an internal ground connection within the field wiring compartment and an external ground connection at the base of the electronics housing. To minimize galvanic corrosion, place the wire lead or contact between the captive washer and loose washer on the external ground screw. If shielded cable is used, earth (ground) the shield at the field enclosure **only**. Do **not** ground the shield at the transmitter.

HART Communicator Connection Points

The HART Communicator can be connected in the loop as shown in "Wiring" in the Installation section. It can also be connected directly to the transmitter at the two upper banana plug receptacles.

Test Points

The two lower banana plug receptacles (designated **CAL**) can be used to check transmitter output when configured for 4 to 20 mA. Measurements should be 100-500 mV dc for 0-100% transmitter output.

Remote Communications

The transmitter communicates bidirectionally over the 2-wire field wiring to a HART Communicator. The information that can be continuously displayed is:

- Process Measurement (expressed in one or two types of units)
- Transmitter Temperature (sensor and electronics)
- mA Output (equivalent)

The information that can be remotely displayed and reconfigured includes:

- Output in Percent Flow (square root) or Pressure Units (linear). Percent Display in Linear mode on local display is also supported.
- Zero and Span, including reranging
- Zero Elevation or Suppression
- Linear Output or Square Root Output (in some models)
- Pressure or Flow Units (from list provided)
- Temperature Sensor Failure Strategy
- Electronic Damping
- Poll Address (Multidrop mode)
- External Zero (Enable or Disable)
- Failsafe Direction
- Tag, Description, and Message
- Date of Last Calibration

Communications Format

Communication is based upon the FSK (Frequency Shift Keying) technique. The frequencies are superimposed on the transmitter power/signal leads.

4 to 20 mA Output

The transmitter sends its differential pressure measurement to the loop as a continuous 4 to 20 mA dc signal. It also communicates digitally with the HART Communicator at distances up to 3000 m (10 000 ft). Communication between the remote configurator and the transmitter does not disturb the 4 to 20 mA output signal. Other specifications are:

Specification	Version 2	Version 4
Data Transmission Rate:	1200 Baud	1200 Baud
4 - 20 mA Update Rate:	4 times/second	30 times/second
Output when Fail Low:	3.75 mA	3.60 mA
Output when Fail High:	21.00 mA	21.00 mA
Output when Underrange	3.75 mA	3.80 mA
Output when Overrange	21.00 mA	20.50 mA
Output when Offline:	4 mA	User configurable between 4 and 20 mA

Product Safety Specifications

DANGER
To prevent possible explosions and to maintain explosionproof, dust-ignitionproof protection, observe applicable wiring practices. Plug unused conduit opening with the provided metal pipe plug, which engages a minimum of five full threads.

WARNING
To maintain IEC IP66 and NEMA Type 4X protection, the unused conduit opening must be plugged. In addition, the threaded housing covers must be installed. Turn covers until O-ring contacts housing; then continue to hand tighten as much as possible (at least 1/4 turn).

NOTE
1. These transmitters have been designed to meet the electrical safety description listed in the table below. For detailed information or status of testing laboratory approvals/certifications, contact Foxboro.
2. Wiring restrictions required to maintain electrical certification of the transmitter are provided in the "Wiring" section of these instructions.

Table 3. Electrical Safety Specifications

Testing Laboratory, Types of Protection, and Area Classification	Application Conditions	Electrical Safety Design Code
ATEX II 1 G EEx ia IIC and II 1/2G EEx ib IIC, intrinsically safe, Gas Group IIC, Zone 0 and Zone1.	Temperature Class T4-T6. See certificate KEMA 00ATEX1009 X for electrical data. Not applicable to Electronic Version -A and -V products.	E
ATEX II 2 G EEx d IIC, flameproof, Gas Group IIC, Zone 1.	Temperature Class T6. See certificate KEMA 00ATEX2019 X for electrical data. Flameproof classification is not applicable to IAP10 and IGP10.	D
ATEX II 3 G EEx nL IIC, energy limited for Gas Group IIC, Zone 2.	Temperature Class T4-T6. See certificate KEMA 00ATEX1060 X for electrical data. Not applicable to Electronic Version -A and -V products.	N
ATEX multiple certifications, ia and ib, d, and n. Refer to Codes E, D, and N for details.	Refer to Codes E, D, and N. [(a)]	M
CSA intrinsically safe for Class I, Division 1, Groups A, B, C, and D; Class II, Division 1, Groups E, F, and G; Class III, Division 1.	Connect per MI 020-427. Temperature Class T4A at 40°C (104°F), and T3C at 85°C (185°F) maximum ambient. Not applicable to Electronic Version -A products.	C
CSA explosionproof for Class I, Division 1, Groups B, C, and D; dust-ignitionproof for Class II, Division 1, Groups E, F, and G; Class III, Division 1.	Temperature Class T6 at 80°C (176°F) and T5 at 85°C (185°F) maximum ambient.	
CSA for Class I, Division 2, Groups A, B, C, and D; Class II, Division 2, Groups F and G; Class III, Division 2.	Connect to source not exceeding 42.4 V. Temperature Class T6 at 40°C (104°F) and T4A at 85°C (185°F) maximum ambient.	

Table 3. Electrical Safety Specifications (Continued)

Testing Laboratory, Types of Protection, and Area Classification	Application Conditions	Electrical Safety Design Code
FM intrinsically safe for Class I, Division 1, Groups A, B, C, and D; Class II, Division 1, Groups E, F, and G; Class III, Division 1.	Connect per MI 020-427. Temperature Class T4A at 40°C (104°F) and T4 at 85°C (185°F) maximum ambient. Not applicable to Electronic Version -A products.	F
FM explosionproof for Class I, Division 1, Groups B, C, and D; dust-ignitionproof for Class II, Division 1, Groups E, F, and G; Class III, Division 1.	Temperature Class T6 at 80°C (176°F) and T5 at 85°C (185°F) maximum ambient.	
FM nonincendive for Class I, Division 2, Groups A, B, C, and D; Class II, Division 2, Groups F and G; Class III, Division 2.	Connect to source not exceeding 42.4 V. Temperature Class T6 at 40°C (104°F) and T4A at 85°C (185°F) maximum ambient.	
SAA Ex, ia, IIC, intrinsically safe, Gas Group IIC, Zone 0.	Not applicable to Electronic Version -A and -V products. Temperature Class T4.	H
SAA EX, d, IIC, flameproof, Gas Group IIC, Zone 1.	Not applicable to Electronic Version -V products. Temperature Class T6.	A
SAA EX, n, IIC, nonincendive, Gas Group IIC, Zone 2.	Not applicable to Electronic Version -V products. Temperature Class T6.	K
No Certification		0

(a) User must permanently mark (check off in rectanglar block on data plate) one type of protection only (ia and ib, d, or n). This mark cannot be changed once it is applied.

2. Installation

CAUTION

To avoid damage to the transmitter sensor, do not use any impact devices, such as an impact wrench or stamping device, on the transmitter.

NOTE

1. The transmitter should be mounted so that any moisture condensing or draining into the field wiring compartment can exit through one of the two threaded conduit connections.
2. Use a suitable thread sealant on all connections.

Transmitter Mounting

The IAP10 and IGP10 transmitters with the 1/2 NPT external thread can be directly connected to the process or mounted to a vertical or horizontal pipe or a surface using the optional mounting set. See figure below.

For dimensional information, refer to DP 020-447. For IGP10 transmitters with Span Limit Code G or H, refer to DP 020-344.

NOTE

1. Do **not** directly mount the IAP10 and IGP10 transmitters, to the process using the 1/4 NPT internal thread. This thread should only be used to connect to the process when the transmitter is mounted with the optional mounting set.
2. Do **not** directly mount IGP10 transmitters with Span Limit Code G or H. Use the optional mounting set as shown in the figure below.
3. Do **not** mount IAP10 or IGP10 transmitters using the conduit connection and optional mounting set when vibration conditions exceed 20 m/s^2 (2 "g").
4. If the transmitter is not installed in the vertical position, readjust the zero output to eliminate the position zero effect. Be aware that an absolute pressure transmitter cannot be zeroed by venting the transmitter to atmosphere.

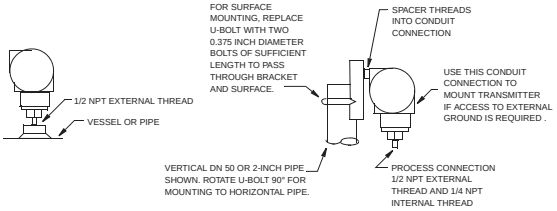

Figure 4. IAP10 and IGP10 Transmitter Mounting

Sanitary Process Connection

The IAP10 and IGP10 transmitters with a sanitary process connector employs a Tri-Clamp connection or mini tank spud seal. Install the transmitter as shown in the figures below For dimensional information see the following documents:

Tri-Clamp Connector: DP 020-218

Mini Tank Spud Connector: DP020-219

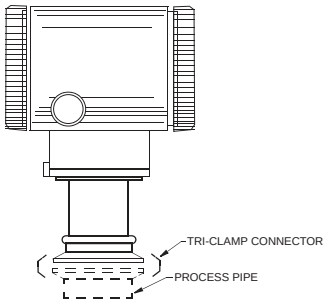

Figure 5. Mounting of Transmitter with Sanitary Tri-Clamp Connection

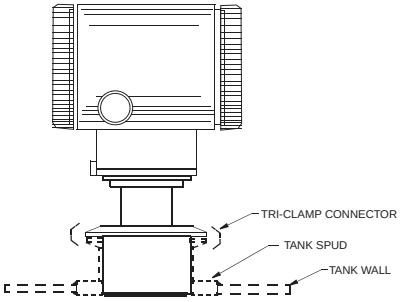

Figure 6. Mounting of Transmitter with Sanitary Mini Tank Spud Seal

The tank spud must be welded into a hole cut in the tank as follows:

1. Cut a 3.75 +0.06 -0.00 inch (95.3 +1.6 - 0 mm) diameter hole into the tank. To assure that the seal is always covered by process fluid, the top of the hole should be below the minimum measurement level.
2. Position the spud mounting ring so that it aligns as close as possible with the inside wall of the tank and that the weep hole is at the bottom.
3. Tack weld the spud mounting ring to the outside of the tank in four places.
4. Weld the spud mounting ring to the inner uurface of the tank per the following notes.

NOTE

1. Spud is 316 stainless steel. Use compatible welding rod. Do not distort spud mounting ring by using excessive heat.
2. Weld the spud mounting ring in sections as indicated in the following figure.
3. After each esction is welded, cool righ with water until the tempoerature is less than 700°F (370°C) before welding the next section.

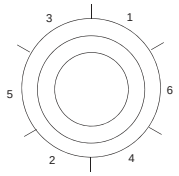

Figure 7. Welding Procedure

5. Grind the weld smoth so that the surface is free from irregularities where dirt cn lodge.
6. Outer surface can be welded if desired after inner weld is completed.

Pulp and Paper Process Connection

The IAP10 and IGP10 transmitters with a pulp and paper process connector are available in two designs - sleeve type and threaded type. Install the transmitter as explained below. For dimensional information see DP 020-217.

Sleeve Type Connector

1. Weld the sleeve to the vessel wall.
2. Lubricate the O-rings with appropriate lubricant.
3. Insert the transmitter sensor into the sleeve and hold it in place with cap screws.

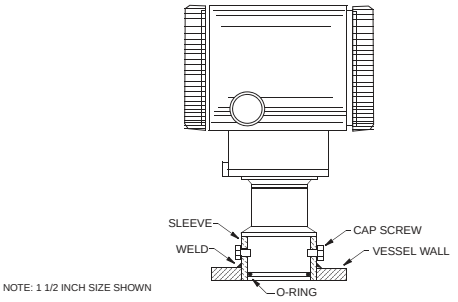

Figure 8. Mounting of Transmitter with Sleeve Type Pulp and Paper Process Connection

Threaded Type Connector

1. Weld the sleeve to the vessel wall.

NOTE

Foxboro recommends using a heat sink during this operation.
1 inch size: Part Number N1214YS
1 1/2 inch size: Part Number N1214YR

2. Place the gasket on the end of the transmitter sensor.
3. Thread the sensor into the sleeve.

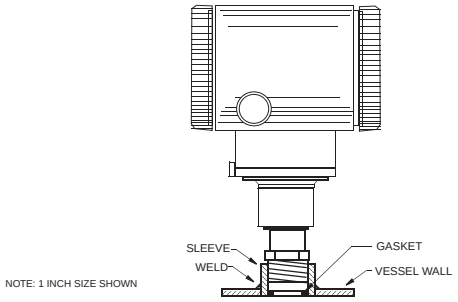

Figure 9. Mounting of Transmitter with Threaded Type Pulp and Paper Process Connection

Typical Transmitter Piping

The figure below shows a typical piping application. Calibration supply pressure can be applied via a calibration screw. The lower conduit port can be used as a drain for moisture buildup in terminal compartment.

NOTE

1. Foxboro recommends the use of snubbers in installations prone to high levels of fluid pulsations.
2. IAP10 and IGP10 Transmitters mounted directly to process piping or a pressure vessel, could require the use of a shutoff valve (shown) to comply with the requirements of ASME Power Piping Code B31.1 and Chemical and Petroleum Piping Code B31.3.

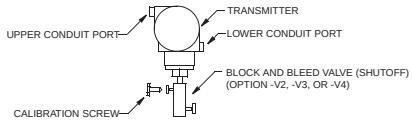

NOTE: Block and Bleed Valve Maximum Pressure
40 MPa (6000 psi at 38°C (100°F)
25 MPa (4000 psi at 250°C (400°F)
Calibration Screw Maximum Pressure
0.7 MPa (100 psi with Poly-Flo Fitting (F0101ES)

Figure 10. Typical Transmitter Piping

For hot process applications above the operative limits of your transmitter [121°C (250°F) for silicone fill fluid or 82°C (180°F) for fluorinert fill fluid], such as steam, additional piping is required to protect the

transmitter from the hot process. See figure below. The piping is filled with water or process fluid. Mount the transmitter below the pressure connection at the pipe. Although the transmitter is shown mounted vertically, you can also mount it horizontally unless sediment is present. The calibration tee is not required if a calibration screw is used for field calibrations.

If trapped vapor pockets cannot be tolerated in a liquid service and a horizontal process connection is used, install a pipe elbow and vertically position the transmitter with the housing **below** the process connection.

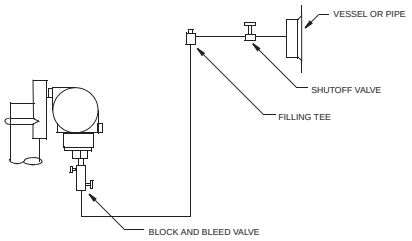

Figure 11. Hot Process Piping

Positioning the Housing

The transmitter housing (topworks) can be rotated up to one full turn in the counterclockwise direction when viewed from above for optimum access to adjustments, display, or conduit connections.

WARNING

If the electronics housing is removed for any reason, it must be hand tightened fully. Then engage the set screw until it bottoms out and back it off 1/8th turn. Fill the set screw recess with red lacquer (Foxboro Part number X0180GS or equivalent). The housing then may be rotated up to one full turn in a counterclockwise direction for optimum access to adjustments.

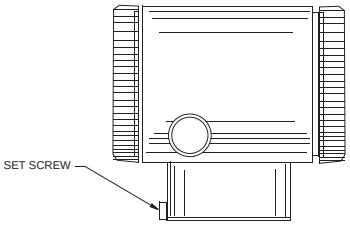

Figure 12. Housing Set Screw Location

Positioning the Display

The display (optional in some models) can be rotated within the housing to any of four positions at 90° increments. To do this, grasp the two tabs on the display and rotate it about 10° in a counterclockwise direction. Pull out the display. Ensure that the O-ring is fully seated in its groove in the display housing. Turn the display to the desired position, reinsert it in the electronics module, aligning the tabs on the sides of the assembly, and twist it in the clockwise direction.

CAUTION

Do **not** turn the display more than 180° in any direction. Doing so could damage its connecting cable.

Cover Locks

Electronic housing cover locks, shown in the figure below, are provided as standard with certain agency certifications and as part of the Custody Transfer Lock and Seal option. Screw the cover locks into the housing to unlock the covers.

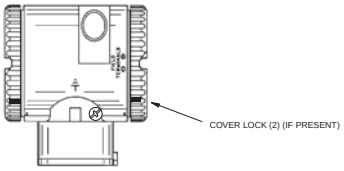

Figure 13. Cover Lock Location

Wiring

The installation and wiring of your transmitter must conform to local code requirements.

NOTE

Foxboro recommends the use of transient/surge protection in installations prone to high levels of electrical transients and surges.

Accessing Transmitter Field Terminals

For access to the field terminals, thread the cover lock (if present) into the housing to clear the threaded cover and remove the cover from the field terminals compartment as shown in the figure below. Note that the embossed letters **FIELD TERMINALS** identify the proper compartment.

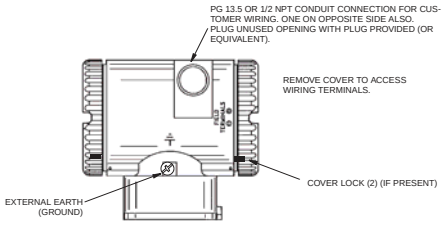

Figure 14. Accessing Field Terminals

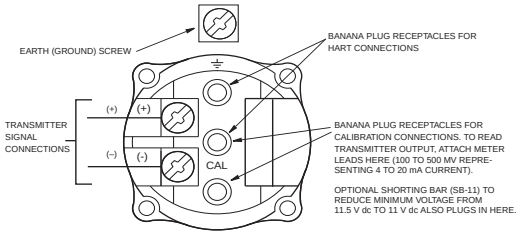

Figure 15. Identification of Field Terminals

Wiring the Transmitter to a Control Loop

When wiring the transmitter, the supply voltage and loop load must be within specified limits. The supply output load vs. voltage relationship is:

R_{MAX} = 47.5 (V - 11.5) and is shown in the figure below.

NOTE

The relationship when the optional shorting bar is used is:

R_{MAX} = 46.8 (V - 11).

Any combination of supply voltage and loop load resistance in the shaded area can be used. To determine the loop load resistance (transmitter output load), add the series resistance of each component in the loop, excluding the transmitter. The power supply must be capable of supplying 22 mA of loop current.

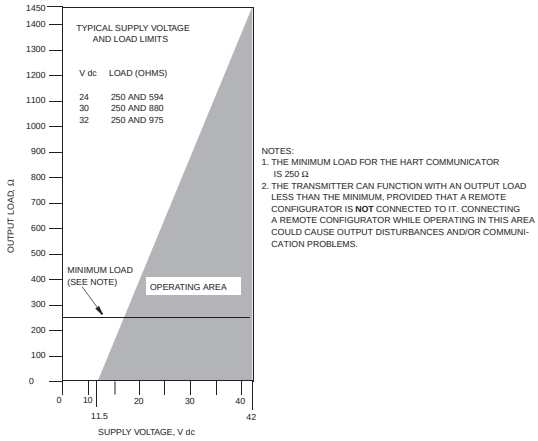

Figure 16. Supply Voltage and Loop Load

Examples:

1. For a loop load resistance of 880 Ω the supply voltage can be any value from 30 to 42 V dc.
2. For a supply voltage of 24 V dc, the loop load resistance can be any value from 250 to 594 Ω (zero to 594 Ω without a HART Communicator connected to the transmitter).

To wire one or more transmitters to a power supply, proceed with the following steps.

1. Remove the cover from the transmitter field terminals compartment.
2. Run signal wires (0.50 mm^2 or 20 AWG, typical) through one of the transmitter conduit connections. Use twisted single pair to protect the 4 to 20 mA output and/or remote communications from electrical noise. Maximum recommended length for signal wires is:
   - 3050 m (10,000 ft) **using single pair cable** and adhering to requirements of HART physical layer implementation defined in HART Document HCF_SPEC-53. Use CN=1 when calculating max. lengths.
   - 1525 m (5000 ft) in a multidrop (15 devices maximum) mode. Screened (shielded) cable could be required in some locations.

NOTE

Do not run transmitter wires in same conduit as mains (ac power) wires.

3. If shielded cable is used, earth (ground) the shield at the power supply **only**. Do not ground the shield at the transmitter.
4. Plug unused conduit connection with the PG 13.5 or 1/2 NPT metal plug provided (or equivalent). To maintain specified explosionproof and dust-ignitionproof protection, plug must engage a **minimum** of five full threads.
5. Connect an earth (ground) wire to the earth terminal in accordance with local practice.

CAUTION

If the signal circuit must be earthed (grounded), it is preferable to do so at the negative terminal of the dc power supply. To avoid errors resulting from earth loops or the possibility of short-circuiting groups of instruments in a loop, there should be only one earth in a loop.

6. Connect the power supply and receiver loop wires to the "+" and "–" terminal connections.
7. Connect receivers (such as controllers, recorders, indicators) in series with power supply and transmitter as shown in the figure below.
8. Install the cover onto the transmitter.
9. If wiring additional transmitters to the same power supply, repeat Steps 1 through 8 for each additional transmitter. The setup with multiple transmitters connected to a single power supply is shown below. Refer to MI 020-350 for details.
10. The HART Communicator can be connected in the loop between the transmitter and the power supply as shown in the two figures below. Note that a minimum of 250 Ω must separate the power supply from the HART Communicator. Refer to MI 020-350 for details.

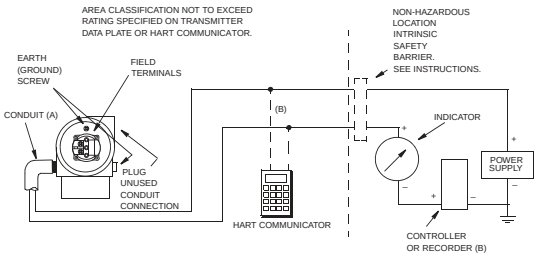

(A) RUN CONDUIT DOWN TO AVOID MOISTURE BUILDUP IN TERMINALS COMPARTMENT.
(B) THERE MUST BE AT LEAST 250 Ω TOTAL RESISTANCE BETWEEN THE HART COMMUNICATOR AND THE POWER SUPPLY.

Figure 17. Loop Wiring Transmitters

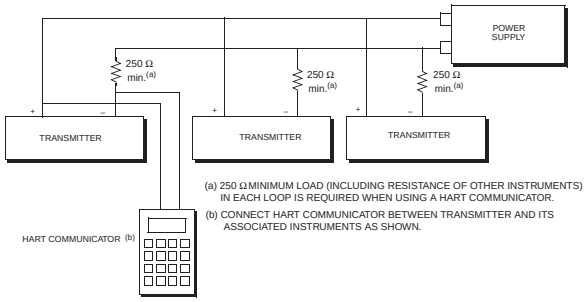

(a) 250 Ω MINIMUM LOAD (INCLUDING RESISTANCE OF OTHER INSTRUMENTS) IN EACH LOOP IS REQUIRED WHEN USING A HART COMMUNICATOR.
(b) CONNECT HART COMMUNICATOR BETWEEN TRANSMITTER AND ITS ASSOCIATED INSTRUMENTS AS SHOWN.

Figure 18. Wiring Several Transmitters to a Common Power Supply

Multidrop Communication

"Multidropping" refers to the connection of several transmitters to a single communications transmission line. Communications between the host computer and the transmitters takes place digitally with the analog output of the transmitter deactivated. With the HART communications protocol, up to 15 transmitters can be connected on a single twisted pair of wires or over leased telephone lines.

The application of a multidrop installation requires consideration of the update rate necessary from each transmitter, the combination of transmitter models, and the length of the transmission line. Multidrop installations are not recommended where Intrinsic Safety is a requirement. Communication with the transmitters can be accomplished with any HART compatible modem and a host implementing the HART protocol. Each transmitter is identified by a unique address (1-15) and responds to the commands defined in the HART protocol.

The figure below shows a typical multidrop network. Do not use this figure as an installation diagram. Contact the HART Communications Foundation, (512) 794-0369, with specific requirements for multidrop applications.

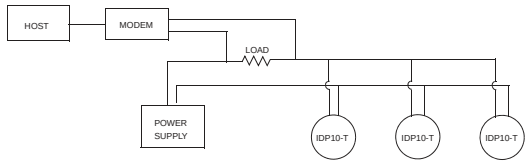

Figure 19. Typical Multidrop Network

The HART Communicator can operate, configure, and calibrate IASPT transmitters with HART communication protocol in the same way as it can in a standard point-to-point installation.

NOTE

IASPT transmitters with HART communication protocol are set to poll address 0 (**POLLADR 0**) at the factory, allowing them to operate in the standard point-to-point manner with a 4 to 20 mA output signal. To activate multidrop communication, the transmitter address must be changed to a number from 1 to 15. Each transmitter must be assigned a unique number on each multidrop network. This change deactivates the 4 to 20 mA analog output.

3. Operation Via Local Display

A local display, as shown in the figure below, has two lines of information. The upper line is a 5-digit numeric display (4-digit when a minus sign is needed); the lower line is a 7-digit alphanumeric display. The display provides local indication of measurement information. The primary (M1) measurement is normally displayed. To view the secondary (M2) measurement, press the **Enter** button while in normal operating mode. Press the **Next** or **Enter** button to return to the primary measurement. If left in M2 display, an M2 message blinks in the lower right of the display. If power to the transmitter is interrupted, the display reverts to the M1 display.

The display also provides a means for performing calibration and configuration, viewing the database, and testing the display via the 2-button keypad. You can access these operations by means of a multi-level menu system. Entry to the Mode Select menu is made (from normal operating mode) by pressing the **Next** button. You can exit this menu, restore your prior calibration or configuration, and return to the normal operating mode at any time by going to **Cancel** and pressing the **Enter** button.

The following items can be selected from this menu: Calibration (**CALIB**). Configuration (**CONFIG**), Viewing the database (**VIEW DB**), and Testing the display (**TST DSP**). The top level structure diagram is shown below.

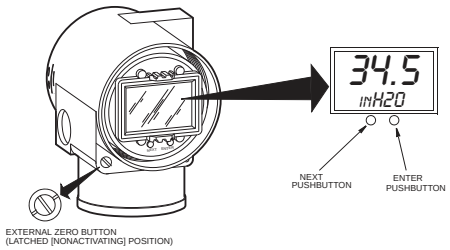

Figure 20. Local Display Module

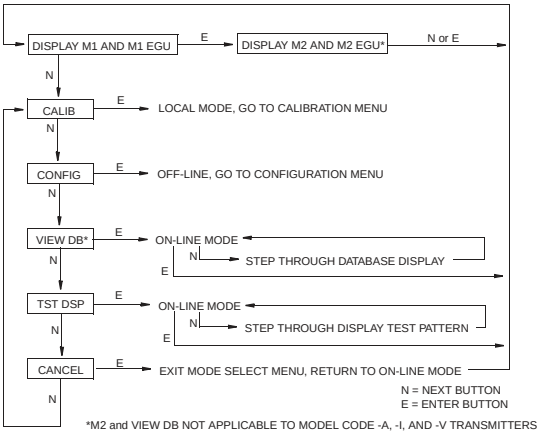

Figure 21. Top Level Structure Diagram

Entering Numerical Values

The general procedure for entering numerical values in Calibration and Configuration is as follows:

1. At the appropriate prompt, press the **Enter** button. The display shows the last (or default) value with the first digit flashing.
2. Use the **Next** button to select the desired first digit, then press the **Enter** button. Your selection is entered and the second digit flashes.
3. Repeat Step 2 until you have created your new value. If the number has less than five characters, use leading or trailing zeros for the remaining spaces. When you have configured the fifth space, the display prompts you to place the decimal point.
4. Move the decimal point with the **Next** button until it is where you want it and press the **Enter** button.

NOTE

1. The decimal point may not be placed directly after the first digit. For example, you can not enter a value as 1.2300; you must enter it as 01.230.
2. The decimal position is identified by flashing except at the position after the fifth digit. At that position (representing a whole number), the decimal point is assumed.

5. The display advances to the next menu item.

Viewing the Database

You can access the View Database mode by the multi-level menu system described above. Entry to the Mode Select menu is made (from normal operating mode) by pressing the **Next** button. The display reads **CALIB**, the first item on the menu. Press the **Next** button twice to get to the third item on the menu, **VIEW DB**. Acknowledge your choice of this selection by pressing the **Enter** button. The display shows the first item in the database. You can step through the database display by repeated use of the **Next** button. You can abort this procedure at any time by pressing the **Enter** button.

Viewing the Calibrated Pressure Range

The values of **M1LRV** and **M1 URV** can be viewed in **VIEW DB** as described above. They can also be viewed in the **RERANGE** function in Calibration mode.

Testing the Display

You can access the Test Display mode by the same multi-level menu system that was used to enter Calibration, Configuration, and View Database mode. Entry to the Mode Select menu is made (from normal operating mode) by pressing the **Next** button. The display reads **CALIB**, the first item on the menu. Press the **Next** button three times to get to the fourth item on the menu, **TST DSP**. Acknowledge your choice of this selection by pressing the **Enter** button. The display shows the first test segment pattern. You can step through the five patterns by repeated use of the **Next** button. You can abort the test at any time by pressing the **Enter** button. The five patterns are shown in the figure below.

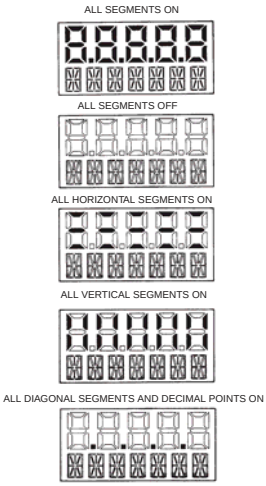

Figure 22. Display Test Segment Patterns

4. Calibration

NOTE

1. For best results in applications where high accuracy is required, rezero the transmitter output once it has stabilized at the final operating temperature.
2. Zero shifts resulting from position effects and/or static pressure effects can be eliminated by rezeroing the transmitter output.
3. When checking the zero reading of a transmitter operating in the square root mode, return the output to the linear mode. This eliminates an apparent instability in the output signal. Return the transmitter output to the square root mode after the zero check is complete.
4. After calibrating transmitters operating with a 4 to 20 mA (or 1 to 5 V dc) output signal, check the underrange and overrange output values to ensure that they extend beyond 4 and 20 mA (or 1 and 5 V dc) respectively.

General Calibration Notes

1. Each transmitter is factory characterized over its full rated pressure range. One benefit of this process is that every transmitter can measure any applied pressure within its range limits regardless of the calibrated range. The applied pressure is measured and converted into an internal digital value of pressure. This digital value of pressure is always available whether the transmitter is calibrated or not. Calibration assures that the transmitter rated accuracy is achieved over the calibrated range.
2. The internal digital value of pressure can be displayed on the optional local display, transmitted digitally, and converted to a 4 to 20 mA analog output signal.
3. Each transmitter is factory calibrated to either a specified or a default calibrated range. This calibration optimizes the accuracy of the internal digital value of pressure over that range. If no range is specified, the default range is zero to the sensor upper range limit (URL).
4. The transmitter database has configurable values for both lower range value (LRV) and upper range value (URV). These values are used for two functions.
   a. Defining the Calibrated Range When Using Local Pushbuttons for Calibration:
      - When either **CAL LRV** (**ZERO** for Firmware Version 2) or **CAL URV** (**SPAN** for Firmware Version 2) is initiated from the local pushbuttons, the transmitter expects that the pressure applied at the time the button is pressed is equal to the LRV or URV value respectively.
      - This function trims the internal digital value of pressure; that is, it performs a calibration based on the application of accurate pressures equal to the values entered for LRV and URV in the transmitter database.
      - This function also sets the 4 and 20 mA output points; that is, the 4 and 20 mA points correspond to the values of LRV and URV in the database.
      - The value of LRV can be larger than the value of URV.
   b. Reranging Without the Application of Pressure:
      - Since the transmitter continually determines an internal digital value of the measured pressure from the lower range limit (LRL) to the upper range limit (URL), the 4 and 20 mA output points can be assigned to any pressure values (within the span and range limits) without application of pressure.
      - The reranging function is accomplished by entering new database values for LRV and URV.

      - Reranging does not affect the calibration of the transmitter; that is, it does not affect the optimization of the internal digital value of pressure over a specific calibrated range.
      - If the reranged LRV and URV are not within the calibrated range, the measured values may not be as accurate as when they are within the calibrated range.
5. When the optional local display is used, the internal digital value of pressure is sent directly to the indicator.
   - The display can show any measured pressure in selected units regardless of the calibrated range and the values of LRV and URV (within the limits of the transmitter and display).
   - If the measured pressure is outside the range established by the LRV and URV values in the database, the display shows the measurement but also continually blinks to indicate that the measurement is out of range. The mA current signal is saturated at either the low or high overrange limit respectively but the display continually shows the pressure.
6. When configured for 4 to 20 mA output, the internal digital value of pressure is converted to an analog current signal.
   - The transmitter sets the output at 4 mA for the LRV and 20 mA for the URV.
   - There is an independent trim on the digital-to-analog conversion stage. This trim allows for slight adjustment of the 4 and 20 mA outputs. This compensates for any slight difference that exists between the transmitter mA output and an external reference device which is measuring the current.
   - The mA trim does not affect the calibration or the reranging of the transmitter and does not affect the internal digital value of pressure or the transmission or display of measured pressure.
   - The mA trim can be done with or without pressure applied to the transmitter.
7. Zeroing from the local display does not affect the span.

   When the transmitter is zeroed to compensate for installed position effect, the transmitter can have either LRV pressure applied (**CAL LRV**) or zero pressure applied (**CAL AT0**). If the range is zero-based, either method produces the same result. However, if the range is not zero-based, it is advantageous to have both methods available.

   For example, consider a pressure transmitter having a range of 50 to 100 psig. If it is not feasible to vent the transmitter to atmosphere for zeroing, it can be zeroed while the LRV pressure of 50 psi is applied by using the **CAL LRV** function. On the other hand, if the transmitter has been installed but there is no pressure in the process line yet, it can be zeroed while open to atmosphere by using the **CAL AT0** function.

   a. Zeroing with LRV Pressure Applied (**CAL LRV** for firmware Version 4 or **ZERO** for firmware Version 2):
      - Before using this zeroing function, apply a pressure to the transmitter equal to the value of LRV stored in the transmitter database.
      - When you zero the transmitter, the internal digital value of the pressure is trimmed to be equal to the value of LRV stored in the database and the mA output set to 4 mA.
      - If zeroing is done when the applied pressure is different from the LRV pressure value in the database, the internal digital value of pressure is biased by the difference in the values but the output is still set at 4 mA.
      - The **CAL LRV** (**ZERO**) and **CAL URV** (**SPAN**) function should be used when calibrating a transmitter for a specific range with known input pressures applied for the LRV and URV.

   b. Zeroing with Zero Pressure Applied (**CAL AT0**)(firmware Version 4 only):
      - Make sure that the applied pressure is at zero. This means venting the transmitter to atmosphere.
      - When you zero the transmitter, the internal digital value of the pressure is trimmed to be equal to zero and the mA output set to an appropriate value such that the mA output is a normal 4 mA when the LRV pressure is applied later.
   - Do not use the **CAL AT0** function with an absolute pressure transmitter. If an absolute pressure transmitter is vented to atmosphere, it does not have zero pressure applied but instead has a pressure of approximately 14.7 psia applied.

Calibration Setup

The following sections show setups for field or bench calibration. Use test equipment that is at least three times as accurate as the desired accuracy of the transmitter.

NOTE

It is not necessary to set up calibration equipment to rerange the transmitter to a different range. The transmitter can be accurately reranged by simply changing the lower range value and the upper range value, which are stored in the transmitter database.

Setup of Electronic Equipment

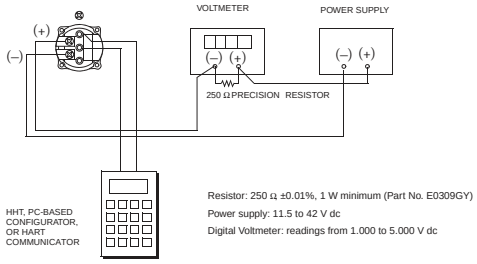

NOTE: 4 to 20 mA calibration is not available with FOUNDATION fieldbus transmitters.

Figure 23. 4 to 20 mA Output Calibration Setup of Electronic Equipment

Field Calibration Setup

Field calibration is performed without disconnecting the process piping. This is only possible if the transmitter is piped as shown below.

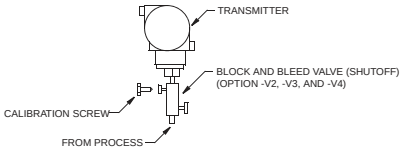

NOTE: Block and Bleed Valve Maximum Pressure
40 MPa (6000 psi at 38°C (100°F)
25 MPa (4000 psi at 250°C (400°F)
Calibration Screw Maximum Pressure
0.7 MPa (100 psi with Poly-Flo Fitting (F0101ES)

Figure 24. Transmitter Piping

If the transmitter is to be removed from the process for calibration, refer to the "Bench Calibration" procedure.

An adjustable air supply and a pressure measuring device are required. For example, a dead weight tester or an adjustable clean air supply and pressure gauge can be used.

Bench Calibration Setup

The bench calibration setup requires disconnecting the process piping. For calibration setup without disconnecting the process piping, refer to the "Field Calibration Setup" procedure.

The input setup is shown in the following figure. If calibrating the output signal, also connect equipment as shown in "Setup of Electronic Equipment."

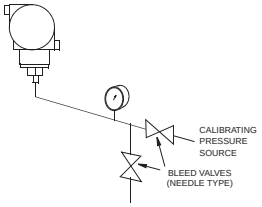

Figure 25. Bench Calibration Setup

Calibration Using a PC20

To calibrate the transmitter using a PC20 Configurator, follow the procedure in MI 020-495.

Calibration Using a HART Communicator

To calibrate the transmitter using a HART Communicator, follow the procedure in MI 020-366.

Calibration Using the Optional Local Display

To access the Calibration mode (from normal operating mode), press the **Next** button. The display reads **CALIB**, the first item on the menu. Acknowledge your choice of this selection by pressing the **Enter** button. The display shows the first item in the Calibration menu.

NOTE

1. During calibration, a single change could affect several parameters. For this reason, if an entry is entered in error, re-examine the entire database or use the **Cancel** feature to restore the transmitter to its starting configuration and begin again.
2. During adjustment of 4 and 20 mA in the Calibration menu, the milliampere output does not reflect live measurement values.

Table 4. Calibration Menu

Item	Description
CAL AT0[a,b]	Calibrate at zero pressure.
CAL LRV[b]	Calibrate with pressure at 0% of transmitter range (LRV).
CAL URV[b]	Calibrate with pressure at 100% of transmitter range (URV).
ZERO[c]	Calibrate at LRV.
SPAN[c]	Calibrate at URV.
ADJ 4mA	Adjust nominal 4 mA output.
ADJ20mA	Adjust nominal 20 mA output .
RERANGE	Adjust primary upper and lower range values.
CALDATE	Enter the calibration date.
ADJ 4mA causes the following four submenus.	
A 4mAΔΔ	Increase 4 mA output by large step.
A 4mA∇∇	Decrease 4 mA output by large step.
A 4mAΔ	Increase 4 mA output by small step.
A 4mA∇	Decrease 4 mA output by small step.
ADJ 20mA causes the following four submenus.	
A 20mAΔΔ	Increase 20 mA output by large step.
A 20mA∇∇	Decrease 20 mA output by large step.
A 20mAΔ	Increase 20 mA output by small step.
A 20mA∇	Decrease 20 mA output by small step.
RERANGE causes the following two submenus.	
M1 URV	Adjust upper range value.
M1 LRV	Adjust lower range value.

(a) Function not applicable to absolute pressure transmitters.
(b) Firmware Version 4.
(c) Firmware Version 2.

NOTE

It is not necessary to use the **ADJ4mA** or **ADJ20mA** menu selections unless there is a plant requirement to make the 4 and 20 mA output values exactly match readings on certain plant calibration equipment and the **ZERO** and **SPAN** operations done result in a small but unacceptable difference between the transmitter mA output and the test equipment mA readout values.

Proceed to calibrate your transmitter by using the **Next** key to select your item and the **Enter** key to specify your selection per the following two figures. At any point in the calibration you can **Cancel**, restore your prior calibration and return to the on-line mode or **Save** your new calibration.

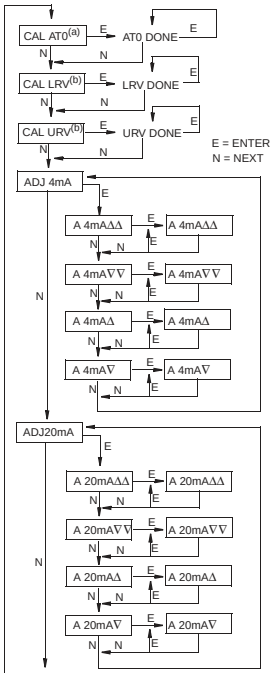

CAL AT0: To set or reset the zero point at zero pressure, apply zero differential pressure to the transmitter and, at display of **CAL AT0**, press **Enter**. This can be done whether LRV is zero or not. Completion is indicated by the display **AT0 Done**.

CAL LRV: To set or reset 0% of range input, apply differential pressure to the transmitter equal to the lower range value (LRV) in the transmitter database and, at display of **CAL LRV**, press **Enter**. Completion is indicated by the display **LRV Done**.

CAL URV: To set or reset 100% of range input, apply differential pressure to the transmitter equal to the upper range value (URV) in the transmitter database and, at display of **CAL URV**, press **Enter**. Completion is indicated by the display **URV Done**.

ADJ4mA: If you configured your transmitter operating mode as 4 to 20 mA, you can adjust the 4 mA output by going to **ADJ4mA** using the **Next** button and press **Enter**. This menu item is bypassed if you configured your transmitter operating mode as digital.

To increase the 4 mA output by a large (0.025 mA) step, press **Enter** at the display **A 4mA**ΔΔ. To decrease it by a large step, go to the display **A 4mA**∇∇ by pressing the **Next** button and then **Enter**. To increase it by a small (0.001 mA) step, go to the display **A 4mA**Δ with the **Next** button and then press **Enter**. To decrease it by a small step, go to the display **A 4mA**∇ with the **Next** button and then press **Enter**.

ADJ20mA: Similar to **ADJ4mA**.

Notes:
(a) Firmware Version 4 only.
Not applicable to Absolute Pressure Transmitters.
(b) Firmware Version 4 shown. Version 2 uses **ZERO** for **CAL LRV** and **SPAN** for **CAL LRV**.

Figure 26. Calibration Structure Diagram

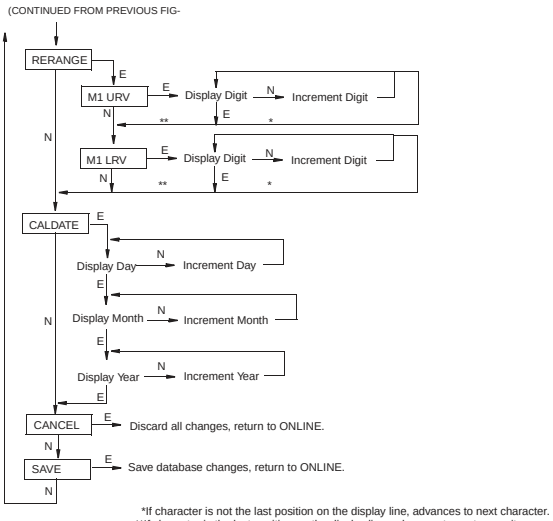

*If character is not the last position on the display line, advances to next character.
**If character is the last position on the display line, advances to next menu item.

NOTE: Commentary about this diagram immediately follows.

Figure 27. Calibration Structure Diagram (Continued)

Commentary on Previous Figure

RERANGE: To adjust 100% and 0% range values, go to **Rerange** with the **Next** button and press **Enter**. You can then adjust **M1 URV** and/or **M1 LRV** in the following two submenus.

NOTE

If M1 is in square root mode, regardless of engineering units selected, **RERANGE** must be done in "default" pressure units. The "default" pressure units are:

- In **inH2O**, if M2 is a type of square root or **OFF**.
- In **M2 EGU** units, if M2 is linear.

The bottom line of the display indicates "default" units during **RERANGE**. Following **RERANGE**, the display automatically switches back to the configured engineering units.

M1 URV: To edit the upper range value, press **Enter** at the prompt **M1 URV**.

M1 LRV: Similar to **M1URV** immediately above.

NOTE

M1 LRV is bypassed if **M1 MODE** is configured as square root since **M1 LRV** must be zero.

CALDATE: This is not a required entry but can be used for recordkeeping or plant maintenance purposes. To edit the calibration date, go to **CALDATE** with the **Next** button and press **Enter**. You then can change the day, month, and year. The display shows the last date with the day flashing. Use the **Next** button to step through the menu of digits to select the desired day, then press **Enter**. Repeat this process for the month and year.

Zero Adjustment Using External Zero Button

An external zero adjustment mechanism in the electronics housing allows local rezeroing of the transmitter output without removing the electronics compartment cover. The mechanism is magnetically activated through the housing wall to prevent moisture from entering the enclosure. Zeroing is accomplished when the external zero button is depressed.

To use this feature:

1. Unlatch the external zero button by turning it 90° in a counterclockwise direction so that the screwdriver slot lines up with the two holes in the face of the adjacent part. Do **not** push the button in with the screwdriver while doing this.
2. With the applied process pressure (LRV) at the desired value, press the button. The zero output of 4 mA is set at this pressure. If the transmitter contains the optional display, the display indicates **ZEROED**. Other possible messages are: **DISABLD** if **EX ZERO** is configured **EXZ DIS**, **WAIT20S** if the transmitter has just been powered or a rezeroing has just been accomplished, and **IGNORED** if the transmitter is not in the on-line mode.

NOTE

1. For the optional display and the digitally transmitted measurement to be correct, the applied pressure must be equal to the value stored in the database for LRV. See "General Calibration Notes."

2. Use caution when you zero the IAP10 or IAP20 transmitters to assure that LRV pressure is applied. For example, a zero-based absolute pressure range transmitter should not be vented to atmosphere and zeroed.

3. If additional rezeroing is required after Steps 1 and 2 have been accomplished, wait 20 seconds and repeat Step 2.
4. Relatch the external zero button by turning it 90° in a clockwise direction to prevent accidental pressing of the button. Do **not** push the button in with the screwdriver while doing this.

Error Messages

Table 5. Calibration Error Messages

Parameter	Condition Tested	Error Message	User Action
ZERO	Internal offset too large	BADZERO	Check applied pressure, configured **M1 LRV** and configured **M1 EOFF**.
SPAN	Slope too large or too small	BADSPAN	Check applied pressure, configured **M1 LRV** and configured **M1 EFAC**.
M1 URV	M1URV > max pressure in EGU	URV>FMX	Entered pressure is greater than maximum rated pressure of transmitter. Check entry. Verify EGUs.
	M1URV < min pressure in EGU	URV<FMN	Entered pressure is less than minimum rated pressure of transmitter. Check entry. Verify EGUs.
	M1 URV = M1 LRV	LRV=URV	Cannot set span to 0. Check entry. Check **M1 LRV**.
	M1 turndown exceeds limit	BADTDWN	Check entry. Check **M1 LRV**.
	URV < 0 with M1 or M2 SqRt	URV<LRV	Square root mode with nonzero LRV is not valid. Change LRV to 0.
M1 LRV	M1LRV > max pressure in EGU	LRV>FMX	Entered pressure is greater than maximum rated pressure of transmitter. Check entry. Verify EGUs.
	M1LRV < min pressure in EGU	LRV<FMN	Entered pressure is less than minimum rated pressure of transmitter. Check entry. Verify EGUs.
	M1 URV = M1 LRV	LRV=URV	Cannot set span to 0. check entry. Check **M1 URV**.
	M1 turndown exceeds limit	BADTDWN	Check entry. Check **M1 URV**.

5. Configuration

Configurable Parameters

The following table lists all the configurable parameters and the factory default for the IAP10-T, IGP10-T, IAP20-T, IGP20-T, IGP25-T, and IGP50-T Transmitters. The factory default values have been customized if the transmitter was ordered with optional feature -C2. The table also shows which parameters are configurable with the integral vs. remote configurators.

Table 6. Configurable Parameters

Parameter	Capability	Factory Default	Configurable with		Application Requirement
			Integ. Indic.	Remote Config.	
Descriptors					
Tag Number	8 characters max	Tag Number	No	Yes	
Descriptor	16 characters max	Tag Name	No	Yes	
Message	32 characters max	Inst Location	No	Yes	
Input					
Calibrated Range	LRV to URV in units listed in (a) below	See (b) below when not specified per S.O.	Yes	Yes	
Output					
Meas. #1 Output	4 to 20 mA or Fixed Current. Specify Poll Address (1-15) for Fixed Current.	4 to 20 mA	Yes	Yes	
Meas. #1 Mode	Linear	Linear	Yes	Yes	
Meas #1 EGUs	Select from units listed in (a) below.	Same as Calibrated Range	Yes	Yes	
Meas. #2 Mode	Linear	Linear	Yes	Yes	
Meas #2 EGUs	If linear, select from units listed in (a) below	Same as Calibrated Range	Yes	Yes	
Temp. Sensor Fail Strategy	Normal oper or fail-safe	Fail-safe	Yes		
Fail-safe	High or Low	High	Yes	Yes	
External Zero	Enabled or Disabled	Enabled	Yes	Yes	
Damping	0 to 32 seconds	None	Yes	Yes	
Poll Address	0 - 15	0	Yes	Yes	
LCD Indicator (c)	Meas #1 EGU or % Lin	Meas #1 EGU	Yes	No	

(a) psi, inHg, ftH_2O, inH_2O, atm, bar, mbar, MPa, Pa, kPa, kg/cm^2, g/cm^2, mmHg, torr, mmH_2O

(b) IAP10 and IGP10: Span Code C: 0 to 30 psi; Span Code D: 0 to 300 psi; Span Code E: 0 to 3000 psi
Span Code F: 0 to 6000; Span Code G: 0 to 15000; Span Code H: 0 to 30000
IAP20 and IGP20: Span Code A: 0 to 30 inH_2O; Span Code B: 0 to 200 inH_2O; Span Code C: 0 to 30 psi; Span Code D: 0 to 300 psi; Span Code E: 0 to 3000 psi.
IGP25 and IGP50:Span Code D: 0 to 200 psi; Span Code E: 0 to 2000 psi

(c) Measurement #2 can be displayed at any time by pressing the **Enter** button regardless of the local display configuration. This reverts to Measurement #1 or % Lin (as configured) when power is cycled off and on.

Configuration Using a PC20

To configure the transmitter using a PC20 Configurator, follow the procedure in MI 020-495.

Configuration Using a HART Communicator

To configure the transmitter using a HART Communicator, follow the procedure in MI 020-366.

Configuration Using the Optional Local Display

You can access the Configuration mode by the same multi-level menu system that was used to enter Calibration mode. Entry to the Mode Select menu is made (from normal operating mode) by pressing the **Next** button. The display reads **CALIB**, the first item on the menu. Press the **Next** button again to get to the second item on the menu, **CONFIG**. Acknowledge your choice of this selection by pressing the **Enter** button. The display shows the first item in the Configuration menu. You can then configure items shown in the following table. The standard factory default configuration is also given in this table.

The standard factory default configuration is not used if custom configuration option -C2 has been specified. Option -C2 is a full factory configuration of all parameters to the user's specifications.

NOTE

1. You can configure most parameters using the local display. However, for more complete configuration capability, use a HART Communicator or PC-Based configurator.
2. During configuration, a single change can affect several parameters. For this reason, if an entry is entered in error, re-examine the entire database or use the **Cancel** feature to restore the transmitter to its starting configuration and begin again.

Table 7. Configuration Menu

Item	Description	Initial Factory Configuration
POLLADR	Poll Address: 0 - 15	0
EX ZERO[(a)]	External Zero: enable or disable	Enable
S2 FAIL	Temperature Sensor Failure Strategy: S2FATAL or S2NOFTL	S2FATAL
OUT DIR	4 to 20 mA Output: forward or reverse	Forward
OUTFAIL	4 to 20 mA Output: fail mode output - low or high	High
OFFL MA	4 to 20 mA Output in offline mode - last or user set[(b)]	USER MA
DAMPING	Damping: none, 1/4, 1/2, 1, 2, 4, 8, 16, or 32 seconds	None
M1 MODE	Output: linear or type of square root[(c)]	Linear
M1DISP	Local Indicator Display in linear mode: in percent or engineering units	M1EGU
M1 EGU	User-Defined Engineering Units	inH_2O or psi
RERANGE	Adjustment of 100% and 0% range limits	- - -
M1 URV	Primary Upper Range Value	URL
M1 LRV	Primary Lower Range Value	0
M2 MODE	Output: linear or type of square root	Linear
M2 EGU	User-Defined Engineering Units	Same as M1 EGU
CALDATE	Calibration Date	- - -
ENA PWD	Enable password; no password, configuration only, or configuration and calibration[(b)]	NO PWD
CFG PWD	User set configuration password (six characters)	- - -
CAL PWD	User set calibration password (six characters)	- - -
SET GDB	Rewrite all calibration and configuration values with default values[(b)]	- - -

Table 7. Configuration Menu (Continued)

Item	Description	Initial Factory Configuration

(a) Applies only if transmitter contains External Zero option.
(b) Applies to firmware Version 4.
(c) Square root is not applicable to absolute pressure, gauge pressure, and flange level measurement.

Proceed to configure your transmitter by using the **Next** button to select your item and the **Enter** button to specify your selection per the following figures. At any point in the configuration you can **Cancel** your changes and return to the on-line mode, or **Save** your changes.

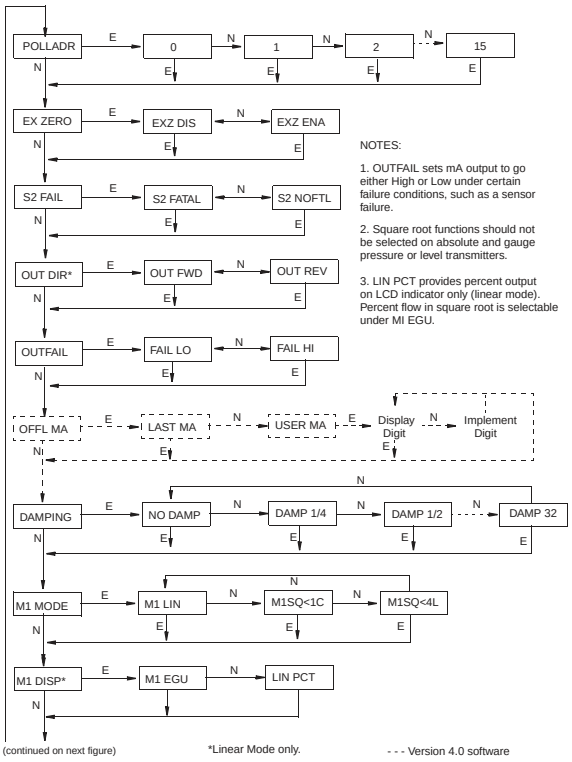

NOTES:

1. OUTFAIL sets mA output to go either High or Low under certain failure conditions, such as a sensor failure.
2. Square root functions should not be selected on absolute and gauge pressure or level transmitters.
3. LIN PCT provides percent output on LCD indicator only (linear mode). Percent flow in square root is selectable under MI EGU.

Figure 28. Configuration Structure Diagram

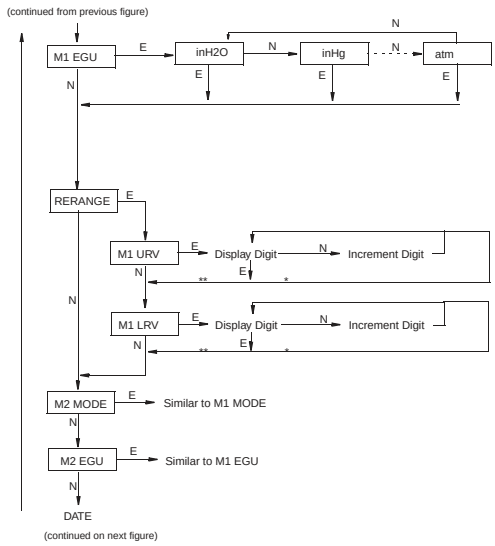

*If character is not the last position on the display line, advances to next character.
**If character is the last position on the display line, advances to next menu item.

Figure 29. Configuration Structure Diagram (Continued)

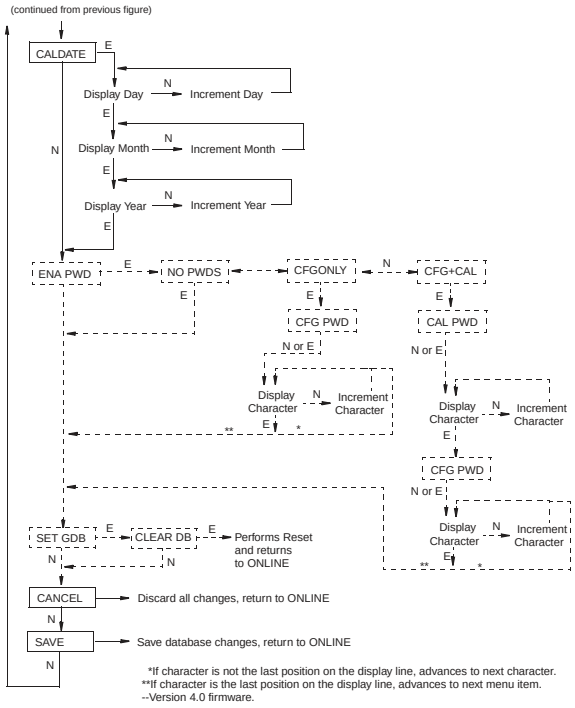

Figure 30. Configuration Structure Diagram (Continued)

Commentary on Configuration Structure Diagram

In general, use the **Next** button to select your item and the **Enter** button to specify your selection.

POLLADR: To configure the transmitter poll address, press **Enter**. Use the **Next** button to select an address of **0** through **15**, then press **Enter**.

EX ZERO: The External Zero feature allows the optional external zero pushbutton to be disabled for additional security. To configure this feature, go to **EX ZERO** with the **Next** button and press **Enter**. Use the **Next** button to select **EXZ DIS** or **EXZ ENA** and press **Enter**.

S2 FAIL: To configure the temperature sensor failure strategy, go to **S2 FAIL** with the **Next** button and press **Enter**. Use the **Next** button to select **S2 FATAL** (to have the output go to that configured in **OUTFAIL**) or **S2 NOFTL** (to continue operation with a temperature sensor failure). This parameter is bypassed if **POLLADR** is configured any number from **1** through **15**.

OUT DIR: To configure the Output Direction, go to **OUT DIR** with the **Next** button and press **Enter**. Use the **Next** button to select **OUT FWD** (4 - 20 mA) or **OUT REV** (20 - 4 mA) and press **Enter**. This parameter is bypassed if **POLLADR** is configured any number from **1** through **15** or if **M1 MODE** or **M2 MODE** is configured as square root.

OUTFAIL: The Outfail feature provides high or low output with certain malfunctions. To configure the fail mode output, go to **OUTFAIL** with the **Next** button and press **Enter**. Use the **Next** button to select **FAIL LO** or **FAIL HI** and press **Enter**. This parameter is bypassed if **POLLADR** is configured any number from **1** through **15**.

OFFL MA: The Off-line mA feature enables you to set the output to a specified value or to the last value if the transmitter goes off-line. To configure the off-line output, go to **OFFL MA** with the **Next** button and press **Enter**. Use the **Next** button to select **LAST MA** or **USER MA** and press **Enter**. If you selected **USER MA**, press **Enter** again at the display of digits. Then use the **Next** button to step through the library of digits to select the desired first digit, then press **Enter**. Your selection is entered and the second character flashes. Repeat this procedure until you have entered the last digit. Then use the **Next** button to move the decimal point to its desired location and press **Enter**. The display advances to the next menu item.

DAMPING: To configure additional damping, go to **DAMPING** with the **Next** button and press **Enter**. Use the **NEXT** button to select **NO DAMP**, **DAMP 1/4**, **DAMP 1/2**, **DAMP 1**, **DAMP 2**, **DAMP 4**, **DAMP 8**, **DAMP 16**, or **DAMP 32** and press **Enter**.

M1 MODE: To configure the mode of the primary output, go to **M1 MODE** with the **Next** button and press **Enter**. Use the **Next** button to select **M1 LIN** and press **Enter**. **M1SQ<1C** (square root with cutoff below 1% of calibrated pressure range) or **M1SQ<4L** (square root with linear below 4% of calibrated pressure range) is not applicable to absolute or gauge pressure measurement.

M1 DISP: To configure the optional local indicator for percent in linear mode, go to **M1 DISP** with the **Next** button and press **Enter**. Use the **Next** button to select **M1 EGU** or **LIN PCT** and press **Enter**. **LIN PCT** only provides percent readings on the local display. **M1EGU** is used for remote communication of Measurement #1, even if **LIN PCT** is selected. This parameter is bypassed if **POLLADR** is configured any number from **1** through **15**.

M1 EGU: To configure pressure or flow engineering units for your display and transmission, go to **M1 EGU** with the **Next** button and press **Enter**. Because **M1 MODE** is configured as **M1 LIN**, you are asked to specify one of the following pressure labels: **psi**, **inHg**, **ftH_2O**, **inH_2O**, **atm**, **bar**, **mbar**, **MPa**, **Pa**, **kPa**, **kg/cm^2**, **g/cm^2**, **mmHg**, **torr**, or **mmH_2O**. Your transmitter then automatically adjusts **M1EFAC** (engineering factor), **M1 URV** (upper range value), and **M1 LRV** (lower range value). **M1EOFF** is set to zero.

RERANGE: To adjust 100% and 0% range limits, go to **RERANGE** with the **Next** button and press **Enter**. You can then adjust **M1 URV** and/or **M1 LRV** in the following two submenus.

M1 URV: To edit the upper range value, press **Enter** at the prompt **M1 URV**. Use the procedure "Entering Numerical Values" in Operation section to edit this parameter.

M1 LRV: Similar to **M1URV** immediately above.

M2 MODE: M2 is a secondary measurement that is read by the Model 275 HART Communicator and can be displayed on the optional display. You might use this feature to display M1 in your primary pressure units and M2 in a different set of pressure units. To configure this parameter, go to **M2 MODE** with the **Next** button and press **Enter**. Use the next button to select **M2 LIN** and press **Enter**.

M2 EGU: Similar to **M1 EGU**.

CALDATE: This is not a required entry but can be used for record-keeping or plant maintenance purposes. To edit the calibration date, go to **CALDATE** with the **Next** button and press **Enter**. You then can change the day, month, and year. The display shows the last date with the day flashing. Use the **Next** button to step through the library of digits to select the desired day, then press **Enter**. Repeat this process for the month and year.

ENA PWD: To enable or disable the password feature, go to **ENA PWD** with the **Next** button and press **Enter**. Use the **Next** button to select **NO PWDS** (password feature disabled), **CFGONLY** (password required to configure only), or **CFG+CAL** (password required to both configure and calibrate) and press **Enter**.

If you selected **CFG ONLY**, the display changes to **CFG PWD**. Press either the **Next** or **Enter** button. Use the **Next** button to step through the library of characters to select the desired first character, then press **Enter**. Your selection is entered and the second character flashes. Repeat this procedure until you have created your password. If the password has less than six characters, use blanks for the remaining spaces. When you have configured the sixth space, the display advances to the next menu item.

If you selected **CFG+CAL**, the display changes to **CAL PWD**. To create the Calibration password, press either the **Next** or **Enter** button. Use the **Next** button to step through the library of characters to select the desired first character, then press **Enter**. Your selection is entered and the second character flashes. Repeat this procedure until you have created your password. If the password has less than six characters, use blanks for the remaining spaces. When you have configured the sixth space, the display advances to the next menu item. Use the same procedure to create the configuration password.

⚠ CAUTION

Record your new password before saving changes to the database.

SET GDB: If your transmitter database becomes corrupted and you receive an **INITERR** message upon startup, this function enables you to rewrite all calibration and configuration values with default values. Therefore, it should **not** be selected if your transmitter is functioning normally.

Character Lists

Table 8. Alphanumeric Character List

Character List*	
@	'
, (comma)	(
A-Z (uppercase)	)
[	*
\	+
]	-
^	.
_ (underscore)	/
space	0-9
!	:
"	;
#	<
$	>
%	=
&	?

*List only applies to Model 275 HART Communicator not to optional local display.

Table 9. Numeric Character List

Character List
–
. (decimal point)
0 through 9

Error Messages

Table 10. Configuration Error Messages

Parameter	Condition Tested	Error Message	User Action
M1 MODE (being changed to square root)	M1 LRV ≠ 0	LRVnot0	Square root mode with nonzero LRV is not valid. Change **M1 LRV** to 0.
	M1 URV < 0	URV<LRV	Square root mode with negative URV is not valid. Change **M1 URV** to positive value.
	OUT DIR is OUT REV	URV<LRV	Square root mode with URV < LRV is not valid. Change **M1 LRV** to 0 and **M1 URV** to positive value.
	M1EFAC < 0	-M1EFAC	Negative **M1 EFAC** is not valid. Change **M1 EFAC** to positive value.
	M2EFAC < 0	-M2EFAC	Negative **M2 EFAC** is not valid. Change **M2 EFAC** to positive value.
	M1EFAC = 0	0M1EFAC	**M1 EFAC** = 0 is not valid. Change **M1 EFAC** to positive value.
	M2EFAC = 0	0M2EFAC	**M2 EFAC** = 0 is not valid. Change **M2 EFAC** to positive value.
	M1EOFF ≠ 0 or M2EOFF ≠ 0	BADEOFF	Square root mode with nonzero **M1 EOFF** and **M2 EOFF** is not valid. Change **M1 EOFF** and **M2 EOFF** to 0.
M1EFAC	M1EFAC < 0	-M1EFAC	Negative **M1 EFAC** is not valid. Change **M1 EFAC** to positive value.
	M1EFAC = 0	0M1EFAC	**M1 EFAC** = 0 is not valid. Change **M1 EFAC** to positive value.
M1 URV	M1URV > max pressure in EGU	URV>FMX	Entered pressure is greater than maximum rated pressure of transmitter. Check entry. Verify EGUs.
	M1URV < min pressure in EGU	URV<FMN	Entered pressure is less than minimum rated pressure of transmitter. Check entry. Verify EGUs.
	M1 URV = M1 LRV	LRV=URV	Cannot set span to 0. Check entry. Check **M1 LRV**.
	M1 turndown exceeds limit	BADTDWN	Check entry. Check **M1 LRV**.
	URV <0 with M1 or M2 SqRt	URV<LRV	Square root mode with nonzero LRV is not valid. Change **M1 LRV** to 0.

Table 10. Configuration Error Messages (Continued)

Parameter	Condition Tested	Error Message	User Action
M1 LRV	M1LRV > max pressure in EGU	LRV>FMX	Entered pressure is greater than maximum rated pressure of transmitter. Check entry. Verify EGUs.
	M1LRV < min pressure in EGU	LRV<FMN	Entered pressure is less than minimum rated pressure of transmitter. Check entry. Verify EGUs.
	M1 URV = M1 LRV	LRV=URV	Cannot set span to 0. Check entry. Check **M1 URV**.
	M1 turndown exceeds limit	BADTDWN	Check entry. Check **M1 URV**.
M2 MODE (being changed to square root)	M1 LRV ≠ 0	LRVnot0	Square root mode with nonzero LRV is not valid. Change **M1 LRV** to 0.
	M1 URV < 0	URV<LRV	Square root mode with negative URV is not valid. Change **M1 URV** to positive value.
	OUT DIR is OUT REV	URV<LRV	Square root mode with URV < LRV is not valid. Change **M1 LRV** to 0 and **M1 URV** to positive value.
	M1EFAC < 0	-M1EFAC	Negative **M1 EFAC** is not valid. Change **M1 EFAC** to positive value.
	M2EFAC < 0	-M2EFAC	Negative **M2 EFAC** is not valid. Change **M2 EFAC** to positive value.
	M1EFAC = 0	0M1EFAC	**M1 EFAC** = 0 is not valid. Change **M1 EFAC** to positive value.
	M2EFAC = 0	0M2EFAC	**M2 EFAC** = 0 is not valid. Change **M2 EFAC** to positive value.
	M1EOFF ≠ 0 or M2EOFF ≠ 0	BADEOFF	Square root mode with nonzero **M1 EOFF** and **M2 EOFF** is not valid. Change **M1 EOFF** and **M2 EOFF** to 0.
M2EFAC	M2EFAC < 0	-M2EFAC	Negative **M2 EFAC** is not valid. Change **M2 EFAC** to positive value.
	M2EFAC = 0	0M2EFAC	**M2 EFAC** = 0 is not valid. Change **M2 EFAC** to positive value.

6. Maintenance

DANGER

For nonintrinsically safe installations, to prevent a potential explosion in a Division 1 hazardous area, de-energize transmitters before you remove threaded housing covers. Failure to comply with this warning could result in an explosion resulting in severe injury or death.

Error Messages

For error messages displayed on the HART Communicator refer to MI 020-366.

Parts Replacement

Parts replacement is generally limited to the electronics module assembly, housing assembly, sensor assembly, terminal block assembly, cover O-rings, and optional display. For part numbers relating to the transmitter and its options, see the parts list listed in the table below.

Transmitter	Parts List
IDP10 Differential Pressure Transmitter	PL 009-005
IAP10 Absolute and IGP10 Gauge Pressure Transmitters	PL 009-006
IAP20 Absolute and IGP20 Gauge Pressure Transmitter	PL 009-007
IGP10 High Gauge Pressure	PL 009-010
IGP25 Gauge Pressure Transmitter	PL 009-011
IGP50 Gauge Pressure Transmitter	PL 009-012
IDP25 Gauge Pressure Transmitter	PL 009-013
IDP50 Gauge Pressure Transmitter	PL 009-014

Replacing the Terminal Block Assembly

1. Turn off transmitter power source.
2. Remove the Field Terminals compartment cover by rotating it counterclockwise. Screw in cover lock if applicable.
3. Remove the four socket head screws securing the terminal block.
4. Disconnect the loop wiring connector from the terminal block.
5. Remove the terminal block and the gasket under it.
6. Reconnect the loop wiring connector to the new terminal block.
7. Install the new terminal block and new gasket and resinstall the four screws to 0.67 N· m (6 in· lb) in several even increments.
8. Reinstall the cover onto the housing by rotating it clockwise until the O-ring contacts the housing. Then continue to hand tighten as much as possible (at least 1/4 turn). If cover locks are present, align the serration in the cover with the lock and unscrew the lock until it extends into the cover serration to prevent unwanted cover rotation.
9. Turn on transmitter power source.

Replacing the Electronics Module Assembly

To replace the electronics module assembly, refer to the figure at the end of this section and proceed as follows:

1. Turn off transmitter power source.
2. Remove the electronics compartment cover by rotating it counterclockwise. Screw in cover lock if applicable.
3. Remove the digital display (if applicable) as follows: grasp the two tabs on the display and rotate it about 10° in a counterclockwise direction. Pull out the display and disconnect its cable.
4. Remove the electronics module from the housing by loosening the two captive screws that secure it to the housing. Then pull the module out of the housing far enough to gain access to the cable connectors on the rear of the module.

CAUTION

The electronics module is “one assembly” at this point and is electrically and mechanically connected to topworks with a flexible ribbon signal cable, a 2-wire power cable, and in some cases, a cable for an external zero pushbutton. Do **not** exceed the slack available in these cables when removing the assembled module.

5. Unplug all cable connectors from the rear of the electronics module and place the module on a clean surface.
6. Predetermine connector orientation, then insert the cable connectors into the replacement module. Replace the module in the housing using care not to pinch the cables between the module and the housing. Tighten the two screws that secure the module to the housing.
7. Connect the cable from the digital display to the electronics module. Ensure that the O-ring is fully seated in the display housing. Then, holding the digital display by the tabs at the sides of the display, insert it into the housing. Secure the display to the housing by aligning the tabs on the sides of the assembly and rotating it about 10° in a clockwise direction.
8. Reinstall the cover onto the housing by rotating it clockwise until the O-ring contacts the housing. Then continue to hand tighten as much as possible (at least 1/4 turn). If cover locks are present, align the serration in the cover with the lock and unscrew the lock until it extends into the cover serration to prevent unwanted cover rotation.
9. Turn on transmitter power source.

The module replacement procedure is now complete.

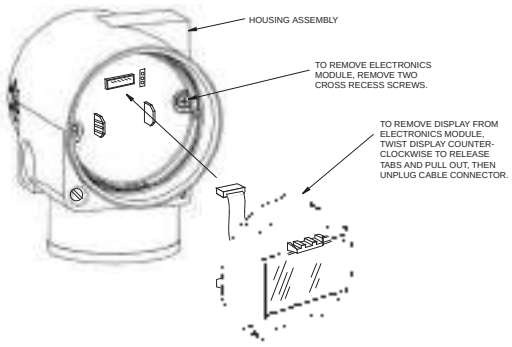

Figure 31. Replacing the Electronics Module Assembly and Display

Removing and Reinstalling a Housing Assembly

To remove and reinstall a housing assembly, refer to the figure in “Replacing the Electronics Module Assembly” and proceed as follows:

1. Remove the electronics module per Steps 1 through 5 in the previous procedure.
2. Remove the housing by rotating it counterclockwise (when viewed from the top) using caution to avoid damaging the ribbon cables.
3. Inspect the sensor O-ring and lubricate if necessary with silicone lubricant (Part Number 0048130 or equivalent).
4. Reinstall the housing by reversing Step 2.
5. Reinstall the electronics module per Steps 6 through 9 in the previous procedure.

Adding the Optional Display

To add the optional display, refer to the figure in “Replacing the Electronics Module Assembly” and proceed as follows:

1. Turn off transmitter power source.
2. Remove the electronics compartment cover by rotating it counterclockwise. Screw in cover lock if applicable.
3. Plug the display into the receptacle at the top of the electronics assembly.
4. Ensure that the O-ring is seated in its groove in the display housing. Then insert the display into the electronics compartment by grasping the two tabs on the display and rotating it about 10° in a clockwise direction.
5. Install the new cover (with a window) onto the housing by rotating it clockwise until the O-ring contacts the housing; then continue to hand tighten as much as possible (at least 1/4 turn). If cover locks are present, align the serration in the cover with the lock and unscrew the lock until it extends into the cover serration to prevent unwanted cover rotation.
6. Turn on transmitter power source.

Replacing the Sensor Assembly

To replace the sensor assembly, refer to the figure in "Replacing the Electronics Module Assembly" and proceed as follows:

1. Remove the electronics module as described above.
2. Remove the housing as described above. Sensor is left.
3. Install housing on new sensor.
4. Reinstall electronics module.

ISSUE DATES
DEC 2001
OCT 2003
Vertical lines to right of text or illustrations indicate areas changed at last issue date.

33 Commercial Street
Foxboro, MA 02035-2099
United States of America
http://www.foxboro.com
Inside U.S.: 1-866-746-6477
Outside U.S.:1-508-549-2424 or contact your local Foxboro Representative.
Facsimile: (508) 549-4492

Invensys, Foxboro, FoxCom, and I/A Series are trademarks of Invensys plc, its subsidiaries, and affiliates.
All other brand names may be trademarks of their respective owners.

Copyright 2001-2003 Invensys Systems, Inc.
All rights reserved

Printed in U.S.A. 1003

Contents

Figures v

Tables vi

1. Introduction 1
General Description 1
Reference Documents 1
Transmitter Identification 2
Standard Specifications 4
Product Safety Specifications 10
ATEX and IECEx Warnings 13
ATEX Compliance Documents 13
IECEx Compliance Documents 14

2. Installation 15
Transmitter Mounting 15
Typical Transmitter Piping 16
Positioning the Housing 18
Positioning the Display 19
Setting the Write Protect Jumper 19
Cover Locks 19
Wiring 20
Accessing Transmitter Field Terminals 20
Wiring the Transmitter to a Control Loop 21
Multidrop Communication 24
Connecting the Transmitter to an I/A Series System 25

3. Operation Via Local Display 27
Entering Numerical Values 28
Reranging 29
Viewing the Database 29
Viewing the Pressure Range 29
Testing the Display 29
Error Messages 30

4. Calibration 31
General Calibration Notes 31

Calibration Setup 33
Setup of Electronic Equipment 34
Field Calibration Setup 34
Bench Calibration Setup 35
Calibration Using a PC20 36
Calibration Using a PC50 36
Calibration Using a HART Communicator 36
Calibration Using the Optional Local Display 36
Zero Adjustment Using External Zero Button 39
Error Messages 41

5. Configuration 43
Configurable Parameters 43
Configuration Using a PC20 44
Configuration Using a PC50 44
Configuration Using a HART Communicator 44
Configuration Using the Optional Local Display 44
Character Lists 52
Error Messages 52

6. Maintenance 55
Error Messages 55
Parts Replacement 55
Replacing the Terminal Block Assembly 55
Replacing the Electronics Module Assembly 56
Removing and Reinstalling a Housing Assembly 57
Adding the Optional Display 58
Replacing the Sensor Assembly 58
Rotating Process Covers for Venting 60

Index 63

Figures

1 Transmitter Identification 3
2 Top Level Structure Diagram 3
3 Minimum Allowable Absolute Pressure vs. Process Temperature with Fluorinert Fill Fluid 7
4 Pipe Mounting 15
5 Surface Mounting 16
6 Typical Transmitter Piping 17
7 Hot Process Piping 18
8 Housing Screw or Clip Location 19
9 Cover Lock Location 20
10 Accessing Field Terminals 20
11 Identification of Field Terminals 21
12 Supply Voltage and Loop Load 22
13 Loop Wiring Transmitters 24
14 Wiring Several Transmitters to a Common Power Supply 24
15 Typical Multidrop Network 25
16 Local Display Module 27
17 Top Level Structure Diagram 28
18 Display Test Segment Patterns 30
19 4 to 20 mA Output Calibration Setup of Electronic Equipment 34
20 IAP20 and IGP20 Field Calibration Setup 35
21 Bench Calibration Setup 36
22 Calibration Structure Diagram 38
23 Calibration Structure Diagram (Continued) 39
24 Configuration Structure Diagram 46
25 Configuration Structure Diagram (Continued) 47
26 Configuration Structure Diagram (Continued) 48
27 Replacing the Electronics Module Assembly and Display 57
28 Replacing the Sensor Assembly 59
29 Replacing the Sensor Assembly (pvdf Inserts) 60
30 Sensor Cavity Venting and Draining 60

Tables

1 Reference Documents 1
2 Minimum Loop Load and Supply Voltage Requirements 9
3 Electrical Safety Specifications 12
4 Operation Error Messages 30
5 Calibration Menu 37
6 Calibration Error Messages 41
7 Configurable Parameters 43
8 Configuration Menu 45
9 Alphanumeric Character List 52
10 Numeric Character List 52
11 Configuration Error Messages 52

1. Introduction

General Description

The IAP20-T Intelligent Absolute Pressure and IGP20-T Intelligent Gauge Pressure Transmitters measure pressure by applying the pressure to a silicon strain gauge microsensor within the sensor assembly. This microsensor converts the pressure to a change in resistance, and the resistance change is converted to a 4 to 20 mA or digital signal proportional to the pressure. This measurement signal is transmitted to remote receivers over the same two wires that supply power to the transmitter electronics. These wires also carry two-way data signals between the transmitter and remote communication devices.

The transmitter allows direct analog connection to common receivers while still providing full Intelligent Transmitter Digital Communications using a HART Communicator.

The IAP10, IGP10 can be supplied with direct connected pressure seals; the IAP10, IGP10, IAP20, and IGP20 with remote pressure seals.

For more detailed information on the principle of operation of the transmitter, refer to document TI 037-096, available from Invensys.

Reference Documents

Table 1. Reference Documents

Document	Description
Dimensional Prints	
DP 020-342	Dimensional Print – PSFLT Pressure Seals
DP 020-343	Dimensional Print – PSFPS and PSFES Pressure Seals
DP 020-345	Dimensional Print – PSFAR Pressure Seals
DP 020-347	Dimensional Print – PSTAR Pressure Seals
DP 020-349	Dimensional Print – PSISR Pressure Seals
DP 020-351	Dimensional Print – PSSCR Pressure Seals
DP 020-353	Dimensional Print – PSSCT Pressure Seals
DP 020-354	Dimensional Print – PSSSR Pressure Seals
DP 020-355	Dimensional Print – PSSST Pressure Seals

Table 1. Reference Documents (Continued)

Document	Description
DP 020-447	Dimensional Print – IAP10 and IAP20 Absolute Pressure and IGP10, IGP20, IGP25, and IGP50 Gauge Pressure Transmitters
Parts Lists	
PL 009-007	Parts List – IAP20 Absolute and IGP20 Gauge Pressure Transmitters
Instructions	
MI 020-366	Instruction – I/A Series Intelligent Pressure Transmitters Operation, Configuration, and Calibration Using a HART Communicator
MI 020-369	Instruction – Pressure Seals
MI 020-427	Instruction – Intrinsic Safety Connection Diagrams and Nonincendive Circuits
MI 020-495	Instruction – PC20 Intelligent Transmitter Configurator
MI 020-501	Instruction – PC50 Intelligent Field Device Tool (Installation and Parts List)
MI 020-520	Instruction – PC50 Intelligent Field Device Tool with Advanced DTM Library
MI 022-138	Instruction – Bypass Manifolds - Installation and Maintenance
Technical Information	
TI 37-75b	Technical Information – Transmitter Material Selection Guide
TI 037-097	Technical Information – Process Sealing of I/A Series Pressure Transmitters for use in Class 1, Zone 0, 1, and 2 Hazardous Locations

Transmitter Identification

See Figure 1 for transmitter data plate contents. For a complete explanation of the Model Number code, see the parts list. The firmware version is identified on the top line of the display when **VIEW DB** (View Database) is selected in the top level structure (see Figure 2).

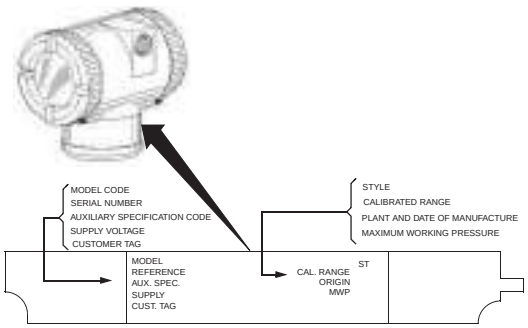

Figure 1. Transmitter Identification

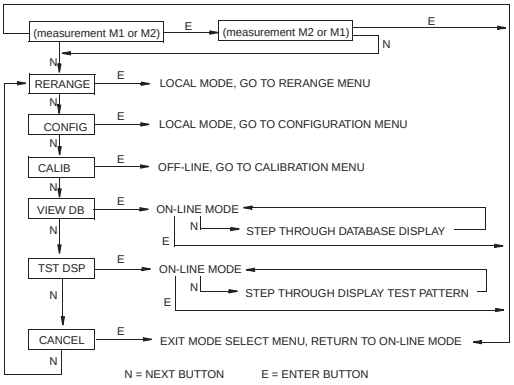

Figure 2. Top Level Structure Diagram

Standard Specifications

Operative Limits

Influence	Operative Limits
Sensor Body Temperature[a] Silicone Fill Fluid Fluorinert Fill Fluid pvdf Inserts	 -46 and +121°C (-50 and +250°F) -29 and +121°C (-20 and +250°F) -7 and +82°C (20 and 180°F)
Electronics Temperature With LCD Display	-40 and +85°C (-40 and +185°F) -40 and +85°C (-40 and +185°F)[b]
Relative Humidity	0 and 100%
Supply Voltage	11.5 and 42 V dc
Output Load[c]	0 and 1450 ohms
Mounting Position	No Limit
Vibration	6.3 mm (0.25 in) double amplitude from 5 to 15 Hz with aluminum housing and from 5 to 9 Hz with 316 ss housing. 0 to 30 m/s (0 to 3 "g") from 15 to 500 Hz with aluminum housing and 0 to 10 m/s (0 to 1 "g") from 9 to 500 Hz with 316 ss housing.

(a) Refer to MI 020-369 for temperature limits with pressure seals.
(b) Display updates are slowed and readability decreased at temperatures below -20°C (-4°F).
(c) 250 Ω minimum load is required for communication with a HART Communicator.

Span and Range Limits

Span Limit Code	Span Limits[a]	Range Limits[a]
A[b,c]	0.12 and 7.5 kPa 0.5 and 30 inH_2O 12 and 750 mmH_20	-7.5 and +7.5 kPa -30 and +30 inH_2O -750 and +750 mmH_20
B	0.87 and 50 kPa 3.5 and 200 inH_2O 87 and 5000 mmH_2O	-50 and +50 kPa -200 and +200 inH_2O -5000 and +5000 mmH_2O
C	0.007 and 0.21 MPa 28 and 840 inH_2O	-0.1 and +0.21 MPa -410 and +840 inH_2O
D	0.07 and 2.1 MPa 10 and 300 psi 23 and 690 ftH_2O	-0.1 and +2.1 MPa -14.7 and +300 psi -34 and +690 ftH_2O
E	0.7 and 21 MPa 100 and 3000 psi	-0.1 and +21 MPa -14.7 and +3000 psi
F[b]	1.38 and 34.5 MPa 200 and 5000 psi	-0.1 and 34.5 MPa -14.7 and 5000 psi

(a) Values listed are in absolute or gauge pressure units, as applicable.
(b) Applicable to IGP20 only.
(c) Not available with pressure seals.

Maximum Overrange Pressure and Proof Pressure

CAUTION
1. Exceeding the overrange pressure limit for the transmitter can cause damage to the transmitter, degrading its performance.
2. The transmitter may be nonfunctional after application of the proof pressure.

Span Limit Code	Maximum Overrange Pressure[a]	Proof Pressure[a,b]
A	25 MPa (3625 psi)	100 MPa (14500 psi)
B	25 MPa (3625 psi)	100 MPa (14500 psi)
C	25 MPa (3625 psi)	100 MPa (14500 psi)
D	25 MPa (3625 psi)	100 MPa (14500 psi)
E	31 MPa (4500 psi)	100 MPa (14500 psi)
F	52 MPa (7500 psi)	100 MPa (14500 psi)

(a) Values listed are in absolute or gauge pressure units, as applicable
(b) Meets ANSI/ISA Standard S82.03-1988.

The maximum overrange pressure and proof pressure may be different depending on the bolting material. Refer to the table below.

Transmitter Configuration (Bolting Material)[c]	Maximum Static and Overrange Pressure Rating[a,e]		Proof Pressure Rating[b]	
	MPa	Psi	MPa	Psi
Option "-B2" (17-4 PH ss), Option "-D3" or "-D7"	25	3625	100	14500
Option "B1" (316 ss) or Option "-D5"	15	2175	60	8700
Option "B3" (B7M)	20	2900	70	11150
Option "-D1"	16	2320	64	9280
Option "-D2", "-D4", "-D6", or "-D8"[d]	10	1500	40	6000
Option "D9" (17-4 PH ss)	40	5800	100	14500

Transmitter Configuration (Bolting Material)[c]	Maximum Static and Overrange Pressure Rating[a,e]		Proof Pressure Rating[b]	
	MPa	Psi	MPa	Psi

(a) Either side can be at higher pressure during overrange.
(b) Meets ANSI/ISA Standard S82.03-1988.
(c) -D1 = DIN Single ended process cover with M10 B7 bolting.
-D2 = DIN Double ended process cover with M10 B7 bolting
-D3 = DIN Single ended process cover with 7/16 in B7bolting.
-D4 = DIN Double ended process cover with 7/16 in B7bolting.
-D5 = DIN Single ended process cover with 7/16 in 316 ss bolting.
-D6 = DIN Double ended process cover with 7/16 in 316 ss bolting.
-D7 = DIN Single ended process cover with 7/16 in 17-4 ss bolting.
-D8 = DIN Double ended process cover with 7/16 in 17-4 ss bolting.
-D9 = DIN Single ended process cover with 7/16 in 17-4 ss bolting.
(d) Limited to operating temperatures ranging from 0 to 60°C (32 to 140°F).
(e) When Structure Codes 78/79 are used (pvdf insert in the Hi side process cover), the maximum overrange is 2.1 MPa (300 psi) and temperature limits are -7 and +82°C (20 and 180°F).

Elevated Zero and Suppressed Zero

For applications requiring an elevated or suppressed zero, the maximum span and the upper and lower range limits of the transmitter can not be exceeded.

Sensor Fill Fluid

Silicone Oil (DC 200) or Fluorinert (FC-43)
Neobee M-20 (for transmitters with sanitary process connection)

Minimum Allowable Absolute Pressure vs. Process Temperature

With Silicone Fill Fluid: up to 120 °C (250 °F) at full vacuum.
With Fluorinert Fill Fluid: Refer to Figure 3.

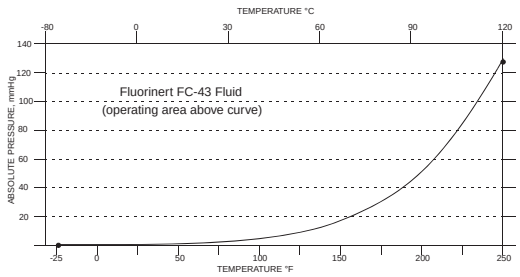

Figure 3. Minimum Allowable Absolute Pressure vs. Process Temperature with Fluorinert Fill Fluid

Mounting Position

The transmitter can be mounted in any orientation. It can be directly mounted to the process with either the direct connected or pipe mounted designs. The housing can be rotated up to one full turn to any desired position for access to adjustments, display, or conduit connections. See "Positioning the Housing" on page 18. The display (if present) can also be rotated in the housing to any of four different positions at 90° increments. See "Positioning the Display" on page 19.

NOTE
Position effect zero shift for all calibrated spans can be eliminated by readjusting zero output after installation.

Approximate Mass

IAP20, IGP20 (w/o process connector):	3.5 kg (7.8 lb)
IAP20 (with process connector):	3.8 kg (8.5 lb)
IGP20 (with process connector):	4.2 kg (9.2 lb)
With Optional 316 ss Housing:	Add 1.1 kg (2.4 lb)
With Pressure Seals:	Varies with seal used

Process Connections

IAP20 and IGP20 transmitters are connected to the process via a 1/4 NPT thread or any one of a number of optional process connectors.

Process Wetted Materials

Diaphragm:	Co-Ni-Cr, 316L ss, Hastelloy C, gold-plated 316L ss, Monel, or tantalum

Covers and Process Connectors:	316 ss, carbon steel, Hastelloy C, or Monel, or pvdf inserts
Pressure Seals:	Refer to MI 020-369
Sanitary Process Connections:	316L ss, Hastelloy C
Pulp and Paper Process Connections	316L ss, Hastelloy C

Process Pressure and Temperature Limits for Pressure Seals

Refer to MI 020-369

Electrical Connections

Field wires enter through 1/2 NPT, PG 13.5, or M20 threaded entrances on either side of the electronics housing. Leads terminate under screw terminals and washers on the terminal block in the field terminal compartment. To maintain RFI/EMI, environmental, and explosionproof ratings, unused conduit connection must be plugged with metal plug (provided), inserted to five full threads for 1/2 NPT connections; seven full threads for M20 and PG 13.5 connections.

Field Wiring Reversal

Accidental reversal of field wiring will not damage the transmitter, provided the current is limited to 1 A or less by active current limiting or loop resistance. Sustained currents of 1 A will not damage the electronics module or sensor but could damage the terminal block assembly and external instruments in the loop.

Adjustable Damping

The transmitter response time is normally 1.0 second or the electronically adjustable setting of 0.00 (none), 0.25, 0.50, 1, 2, 4, 8, 16, or 32 seconds, whichever is greater, for a 90% recovery from an 80% input step as defined in ANSI/ISA S51.1.

Output Signal

4 to 20 mA dc linear.

Zero and Span Adjustments

Zero and span are adjustable from the HART Communicator. They are also adjustable at the transmitter using the display. An optional external self-contained moisture sealed pushbutton assembly allows local resetting of zero without removing the housing cover.

Power-up Time

Less than 2.0 seconds for output to reach the first valid measurement, then at the electronic damping rate to reach the final measured variable value.

Supply Voltage

Power supply must be capable of providing 22 mA when the transmitter is configured for 4 to 20 mA output. Ripple of up to 2 V pp (50/60/100/120 Hz) is tolerable, but instantaneous voltage must remain within specified range.

The supply voltage and loop load must be within specified limits. This is explained in detail in "Wiring" on page 20. A summary of the minimum requirements is listed in Table 2.

Table 2. Minimum Loop Load and Supply Voltage Requirements

	HART Communication	No HART Communication
Minimum Resistance	250 Ω	0
Minimum Supply Voltage	17 V	11.5 V

Electrical Ground Connections

The transmitter is equipped with an internal ground connection within the field wiring compartment and an external ground connection at the base of the electronics housing. To minimize galvanic corrosion, place the wire lead or contact between the captive washer and loose washer on the external ground screw. If shielded cable is used, earth (ground) the shield at the field enclosure **only**. Do **not** ground the shield at the transmitter.

HART Communicator Connection Points

The HART Communicator can be connected in the loop as shown in "Wiring" on page 20. It can also be connected directly to the transmitter at the two upper banana plug receptacles.

Test Points

The two lower banana plug receptacles (designated **CAL**) can be used to check transmitter output when configured for 4 to 20 mA. Measurements should be 100-500 mV dc for 0-100% transmitter output.

Remote Communications

The transmitter communicates bidirectionally over the 2-wire field wiring to a HART Communicator. The information that can be continuously displayed is:

- Process Measurement (expressed in one or two types of units)
- Transmitter Temperature (sensor and electronics)
- mA Output (equivalent)

The information that can be remotely displayed and reconfigured includes:

- Output in Percent Flow (square root) or Pressure Units (linear). Percent Display in Linear mode on local display is also supported.
- Zero and Span, including reranging
- Zero Elevation or Suppression

- Linear Output or Square Root Output (in some models)
- Pressure or Flow Units (from list provided)
- Temperature Sensor Failure Strategy
- Electronic Damping
- Poll Address (Multidrop mode)
- External Zero (Enable or Disable)
- Failsafe Direction
- Tag, Description, and Message
- Date of Last Calibration

Communications Format

Communication is based upon the FSK (Frequency Shift Keying) technique. The frequencies are superimposed on the transmitter power/signal leads.

4 to 20 mA Output

The transmitter sends its differential pressure measurement to the loop as a continuous 4 to 20 mA dc signal. It also communicates digitally with the HART Communicator at distances up to 3000 m (10 000 ft). Communication between the remote configurator and the transmitter does not disturb the 4 to 20 mA output signal. Other specifications are:

Data Transmission Rate:	1200 Baud
4 - 20 mA Update Rate:	30 times/second
Output when Fail Low:	3.60 mA
Output when Fail High:	21.00 mA
Output when Underrange	3.80 mA
Output when Overrange	20.50 mA
Output when Offline:	User configurable between 4 and 20 mA

Product Safety Specifications

DANGER

To prevent possible explosions and to maintain flameproof, explosionproof, and dust-ignitionproof protection, observe applicable wiring practices. Plug unused conduit opening with the provided metal pipe plug. Both plug and conduit must engage a minimum of five full threads for 1/2 NPT connections; seven full threads for M20 and PG 13.5 connections.

WARNING

To maintain IEC IP66 and NEMA Type 4X protection, the unused conduit opening must be plugged with the metal plug provided. Use a suitable thread sealant on both conduit connections. In addition, the threaded housing covers must be installed. Turn covers to seat the O-ring into the housing and then continue to hand tighten until the cover contacts the housing metal-to-metal.

NOTE

1. These transmitters have been designed to meet the electrical safety description listed in Table 3. For detailed information or status of testing laboratory approvals/certifications, contact Invensys.
2. Wiring restrictions required to maintain electrical certification of the transmitter are provided in "Wiring" on page 20.

Table 3. Electrical Safety Specifications

Agency Certification, Types of Protection, and Area Classification	Application Conditions	Electrical Safety Design Code
ATEX flameproof: II 2 GD EEx d IIC, Zone 1.	KEMA 00ATEX2019X Temperature Class T6, T85°C, Ta = -40 to +80°C	D
ATEX intrinsically safe: II 1 GD EEx ia IIC, Zone 0.	SIRA 06ATEX2055X Temperature Class T4,Ta = -40 to +80°C	E
ATEX protection n: II 3 GD EEx nL IIC, Zone 2.	SIRA 06ATEX4056X Temperature Class T4, Ta = -40 to +80°C	N
ATEX multiple certifications, ia & ib and n. Refer to Codes E and N for details.	Applies to Codes D, E, and N.[(a)]	M
CSA intrinsically safe for Class I, Division 1, Groups A, B, C, and D; Class II, Division 1, Groups E, F, and G; Class III, Division 1. Also, Zone certified intrinsically safe Ex ia IIC and energy limited Ex nA II.	Connect per MI 020-427. Temperature Class T4A at 40°C (104°F) and T3C at 85°C (185°F) maximum ambient. Temperature Class T4 at 40°C (104°F), and T3 at 85°C (185°F) max. ambient.	C
CSA explosionproof for Class I, Division 1, Groups B, C, and D; dust-ignitionproof for Class II, Division 1, Groups E, F, and G; Class III, Division 1.	Maximum Ambient Temperature 85°C (185°F).	
CSA for Class I, Division 2, Groups A, B, C, and D; Class II, Division 2, Groups F and G; Class III, Division 2.	Temperature Class T4A at 40°C (104°F) and T3C at 85°C (185°F) maximum ambient.	
CSA field device zone certified flameproof Ex d IIC. Also, all certifications of Code C above.	Maximum Ambient Temperature 85°C (185°F).	B

Table 3. Electrical Safety Specifications (Continued)

Agency Certification, Types of Protection, and Area Classification	Application Conditions	Electrical Safety Design Code
FM intrinsically safe for Class I, Division 1, Groups A, B, C, and D; Class II, Division 1, Groups E, F, and G; Class III, Division 1. Also, Zone certified intrinsically safe AEx ia IIC.	Connect per MI 020-427. Temperature Class T4A at 40°C (104°F) and T4 at 85°C (185°F) maximum ambient. Temperature Class T4 at 85°C (185°F) maximum ambient.	
FM explosionproof for Class I, Division 1, Groups B, C, and D; dust-ignitionproof for Class II, Division 1, Groups E, F, and G; Class III, Division 1.	Temperature Class T6 at 80°C (176°F) and T5 at 85°C (185°F) maximum ambient.	F
FM nonincendive for Class I, Division 2, Groups A, B, C, and D; Class II, Division 2, Groups F and G; Class III, Division 2.	Temperature Class T4A at 40°C (104°F) and T4 at 85°C (185°F) maximum ambient.	
FM field device zone certified flameproof AEx d IIC. Also, all certifications of Code F above.	Temperature Class T6 at 75°C (167°F) maximum ambient.	G
IECEx intrinsically safe: Ex ia IIC.	IECEx SIR 06.0010X Temperature Class T4, Ta = -40 to +80°C.	T
IECEx protection n: Ex nL IIC	IECEx SIR 06.0011X Temperature Class T4, Ta = -40 to +80°C.	U
IECEx flameproof: Ex d IIC	IECEx FMG 06.0007X, Ex d IIC T6 Ta=80°C, T5 Ta=85°C Ambient Temperature -20 to +85°C	V

(a) User must permanently mark (check off in rectangular block on data plate) one type of protection only (ia and ib, d, or n). This mark cannot be changed once it is applied.

ATEX and IECEx Warnings

Do not open while circuits are alive.

ATEX Compliance Documents

EN 50014: 1997 (A1 and A2)
EN 50020: 2002
EN 50284: 1999

EN 50281-1-1: 1998
EN 60079-15: 2004

IECEx Compliance Documents

IEC 60079-0 (Edition 3.1): 2000
IEC 60079-0 (Edition 4): 2000
IEC 60079-1 (Edition 5): 2003
IEC 60079-11 (Edition 4): 1999

2. Installation

CAUTION

To avoid damage to the transmitter sensor, do not use any impact devices, such as an impact wrench or stamping device, on the transmitter.

NOTE

1. The transmitter should be mounted so that any moisture condensing or draining into the field wiring compartment can exit through one of the two threaded conduit connections.
2. Use a suitable thread sealant on all connections.

Transmitter Mounting

The IAP20 and IGP20 transmitters must be mounted to a vertical or horizontal pipe or a surface using the mounting set. See Figures 4 and 5. For dimensional information, refer to DP 020-447.

NOTE

1. If the transmitter is not installed in the vertical position, readjust the zero output to eliminate the position zero effect. Be aware that an absolute pressure transmitter cannot be zeroed by venting the transmitter to atmosphere.
2. The lower conduit port can be used as a drain for moisture buildup in terminal compartment.

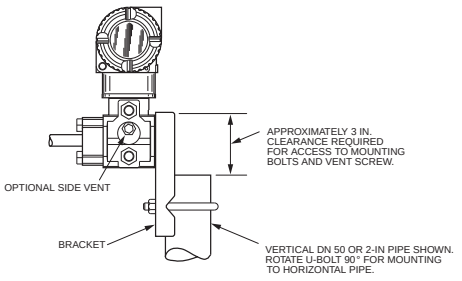

Figure 4. Pipe Mounting

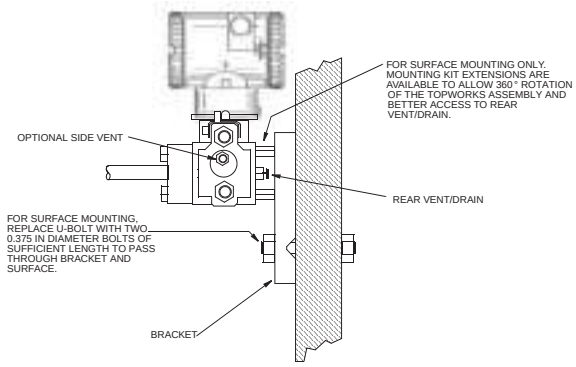

Figure 5. Surface Mounting

Typical Transmitter Piping

Figure 6 shows a typical piping application. Tighten the process connector bolts to a torque of 61 N·m (45 lb·ft) and drain plugs and vent screws to a torque of 20 N·m (15 lb·ft).

NOTE

1. Invensys recommends the use of snubbers in installations prone to high levels of fluid pulsations.
2. When structure codes 78/79 (pvdf insert) are used on an IAP20, the process connection must be made directly to the pvdf insert in the high side process cover.

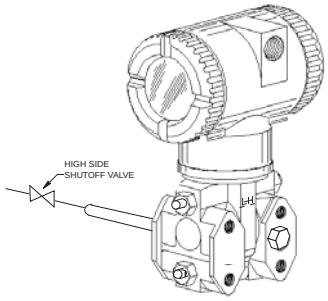

Figure 6. Typical Transmitter Piping

For hot process applications above the operative limits of your transmitter [121°C (250°F) for silicone fill fluid or 82°C (180°F) for fluorinert fill fluid], such as steam, additional piping is required to protect the transmitter from the hot process. See Figure 7. The piping is filled with water or process fluid. Mount the transmitter below the pressure connection at the pipe. Although the transmitter is shown mounted vertically, you can also mount it horizontally. The calibration tee is not required if a calibration screw is used for field calibrations.

If trapped vapor pockets cannot be tolerated in a liquid service and a horizontal process connection is used, install a pipe elbow and vertically position the transmitter with the housing **below** the process connection.

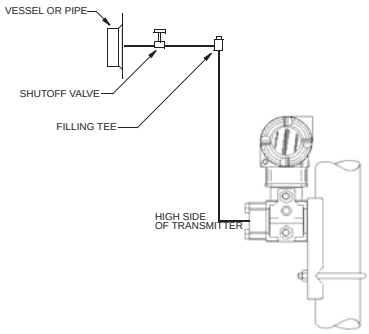

Figure 7. Hot Process Piping

Positioning the Housing

The transmitter housing (topworks) can be rotated up to one full turn in the counterclockwise direction when viewed from above for optimum access to adjustments, display, or conduit connections. Housings have either an anti-rotation screw or a retention clip that prevent the housing from being rotated beyond a safe depth of housing/sensor thread engagement.

WARNING

If the electronics housing is removed for maintenance, it must be hand tightened to the bottom of the threads, but not over-tightened upon reassembly. See "Removing and Reinstalling a Housing Assembly" on page 57.

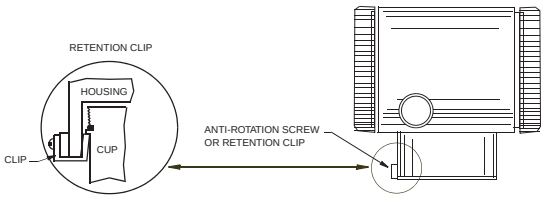

Figure 8. Housing Screw or Clip Location

Positioning the Display

The display (optional in some models) can be rotated within the housing to any of four positions at 90° increments. To do this, grasp the two tabs on the display and rotate it about 10° in a counterclockwise direction. Pull out the display. Ensure that the O-ring is fully seated in its groove in the display housing. Turn the display to the desired position, reinsert it in the electronics module, aligning the tabs on the sides of the assembly, and twist it in the clockwise direction.

CAUTION

Do **not** turn the display more than 180° in any direction. Doing so could damage its connecting cable.

Setting the Write Protect Jumper

Your transmitter has write protection capability. This means that the external zero, local display, and remote communications can be prevented from writing to the electronics. Write protection is set by moving a jumper that is located in the electronics compartment behind the optional display. To activate write protection, remove the display as described in the previous section, then remove the jumper or move it to the lower position as shown on the exposed label. Replace the display.

Cover Locks

Electronic housing cover locks, shown in Figure 9, are provided as standard with certain agency certifications and as part of the Custody Transfer Lock and Seal option. To lock the covers, unscrew the locking pin until approximately 6 mm (0.25 in) shows, lining up the hole in the pin with the hole in the housing. Insert the seal wire through the two holes, slide the seal onto the wire ends and crimp the seal

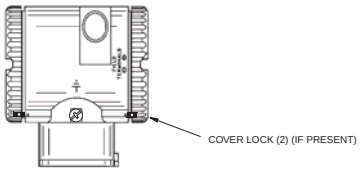

Figure 9. Cover Lock Location

Wiring

The installation and wiring of your transmitter must conform to local code requirements.

WARNING

ATEX requires that when the equipment is intended to be used in an explosive atmosphere caused by the presence of combustible dust, cable entry devices and blanking elements shall provide a degree of ingress protection of at least IP6X. They shall be suitable for the conditions of use and correctly installed.

NOTE

Invensys recommends the use of transient/surge protection in installations prone to high levels of electrical transients and surges.

Accessing Transmitter Field Terminals

For access to the field terminals, thread the cover lock (if present) into the housing to clear the threaded cover and remove the cover from the field terminals compartment as shown in Figure 10. Note that the embossed letters **FIELD TERMINALS** identify the proper compartment.

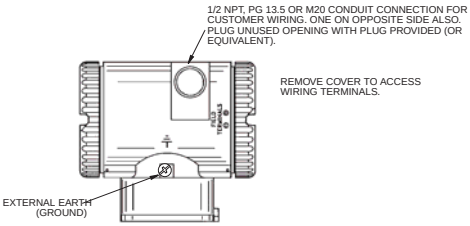

Figure 10. Accessing Field Terminals

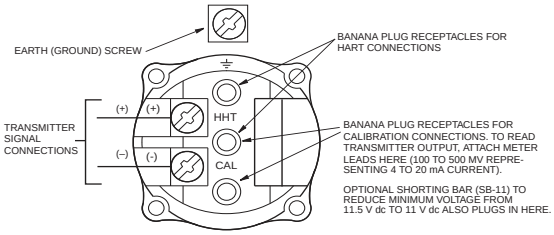

Figure 11. Identification of Field Terminals

Wiring the Transmitter to a Control Loop

When wiring the transmitter, the supply voltage and loop load must be within specified limits. The supply output load vs. voltage relationship is:

R_{MAX} = 47.5 (V - 11.5) and is shown in Figure 12.

NOTE

The relationship when the optional shorting bar is used is:
R_{MAX} = 46.8 (V - 11).

Any combination of supply voltage and loop load resistance in the shaded area can be used. To determine the loop load resistance (transmitter output load), add the series resistance of each component in the loop, excluding the transmitter. The power supply must be capable of supplying 22 mA of loop current.

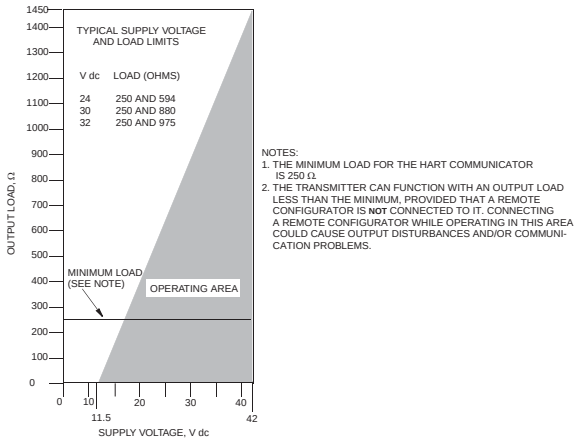

Figure 12. Supply Voltage and Loop Load

Examples:

1. For a loop load resistance of 880 Ω, the supply voltage can be any value from 30 to 42 V dc.
2. For a supply voltage of 24 V dc, the loop load resistance can be any value from 250 to 594 Ω (zero to 594 Ω without a HART Communicator or PC-Based Configurator connected to the transmitter).

To wire one or more transmitters to a power supply, proceed with the following steps.

1. Remove the cover from the transmitter field terminals compartment.
2. Run signal wires (0.50 mm^2 or 20 AWG, typical) through one of the transmitter conduit connections. Use twisted single pair to protect the 4 to 20 mA output and/or remote communications from electrical noise. Maximum recommended length for signal wires is:
   - 3050 m (10,000 ft) **using single pair cable** and adhering to requirements of HART physical layer implementation defined in HART Document HCF_SPEC-53. Use CN=1 when calculating max. lengths.
   - 1525 m (5000 ft) in a multidrop (15 devices maximum) mode. Screened (shielded) cable could be required in some locations.

NOTE

Do not run transmitter wires in same conduit as mains (ac power) wires.

3. If shielded cable is used, earth (ground) the shield at the power supply **only**. Do not ground the shield at the transmitter.
4. Plug unused conduit connection with the 1/2 NPT, PG 13.5 or M20 metal plug provided (or equivalent). To maintain specified explosionproof and dust-ignitionproof protection, plug must engage a **minimum** of five full threads for 1/2 NPT connections; seven full threads for M20 and PG 13.5 connections.
5. Connect an earth (ground) wire to the earth terminal in accordance with local practice.

CAUTION

If the signal circuit must be earthed (grounded), it is preferable to do so at the negative terminal of the dc power supply. To avoid errors resulting from earth loops or the possibility of short-circuiting groups of instruments in a loop, there should be only one earth in a loop.

6. Connect the power supply and receiver loop wires to the "+" and "–" terminal connections.
7. Connect receivers (such as controllers, recorders, indicators) in series with power supply and transmitter as shown in Figure 13.
8. Reinstall the cover onto the housing by rotating it clockwise to seat the O-ring into the housing and then continue to hand tighten until the cover contacts the housing metal-to-metal. If cover locks are present, lock the cover per the procedure described in "Cover Locks" on page 19.
9. If wiring additional transmitters to the same power supply, repeat Steps 1 through 8 for each additional transmitter. The setup with multiple transmitters connected to a single power supply is shown in Figure 14.
10. A HART Communicator or PC-Based Configurator can be connected in the loop between the transmitter and the power supply as shown in Figures 13 and 14. Note that a minimum of 250 Ω must separate the power supply from the HART Communicator or PC-Based Configurator.

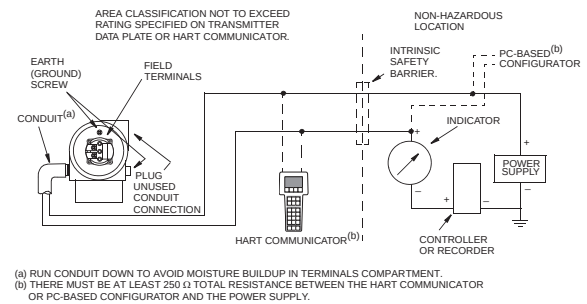

Figure 13. Loop Wiring Transmitters

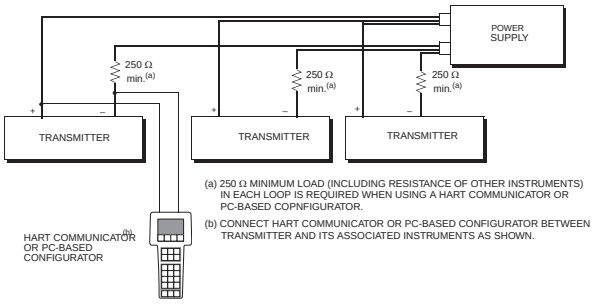

Figure 14. Wiring Several Transmitters to a Common Power Supply

Multidrop Communication

"Multidropping" refers to the connection of several transmitters to a single communications transmission line. Communications between the host computer and the transmitters takes place digitally with the analog output of the transmitter deactivated. With the HART communications

protocol, up to 15 transmitters can be connected on a single twisted pair of wires or over leased telephone lines.

The application of a multidrop installation requires consideration of the update rate necessary from each transmitter, the combination of transmitter models, and the length of the transmission line. Multidrop installations are not recommended where Intrinsic Safety is a requirement. Communication with the transmitters can be accomplished with any HART compatible modem and a host implementing the HART protocol. Each transmitter is identified by a unique address (1-15) and responds to the commands defined in the HART protocol.

Figure 15 shows a typical multidrop network. Do not use this figure as an installation diagram. Contact the HART Communications Foundation, (512) 794-0369, with specific requirements for multidrop applications.

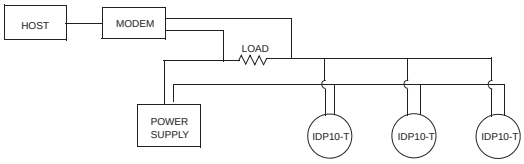

Figure 15. Typical Multidrop Network

The HART Communicator can operate, configure, and calibrate IASPT transmitters with HART communication protocol in the same way as it can in a standard point-to-point installation.

NOTE

IASPT transmitters with HART communication protocol are set to poll address 0 (**POLLADR 0**) at the factory, allowing them to operate in the standard point-to-point manner with a 4 to 20 mA output signal. To activate multidrop communication, the transmitter address must be changed to a number from 1 to 15. Each transmitter must be assigned a unique number on each multidrop network. This change deactivates the 4 to 20 mA analog output.

Connecting the Transmitter to an I/A Series System

The transmitter can also send its measurement to an I/A Series system as a digital signal via an FBM214/215. Wiring terminations at the transmitter are the same as described above. For other system wiring details, refer to the installation instructions provided with the I/A Series system.

3. Operation Via Local Display

A local display, as shown in Figure 16, has two lines of information. The upper line is a 5-digit numeric display (4-digit when a minus sign is needed); the lower line is a 7-digit alphanumeric display. The display provides local indication of measurement information.

The display can be configured to meet your specific needs. If configured **Show 1**, M1 is displayed. If configured **Show 2**, M2 is displayed. To temporarily view the alternate measurement, press the **Enter** button. After showing this measurement for a brief period, the display reverts to the configured display. If configured **Toggle**, the display toggles between M1 and M2. When M2 is displayed, an M2 message blinks in the lower right of the display.

The display also provides a means for performing calibration and configuration, viewing the database, testing the display, and reranging the transmitter via the 2-button keypad. You can access these operations by means of a multi-level menu system. Entry to the Mode Select menu is made (from normal operating mode) by pressing the **Next** button. You can exit this menu, restore your prior calibration or configuration, and return to the normal operating mode at any time by going to **Cancel** and pressing the **Enter** button.

The top level structure diagram is shown in Figure 17.

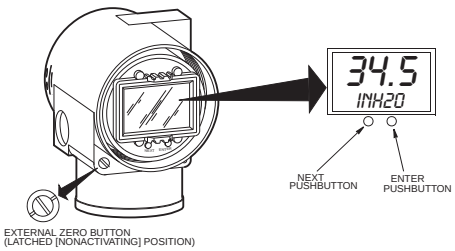

Figure 16. Local Display Module

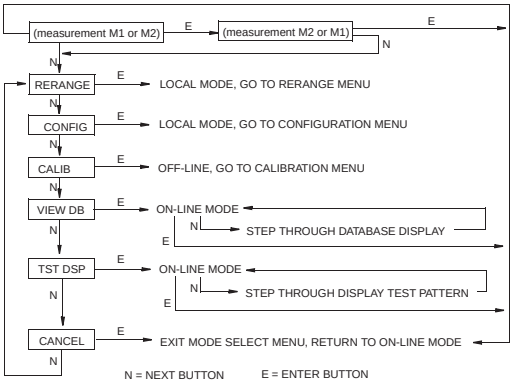

Figure 17. Top Level Structure Diagram

Entering Numerical Values

The general procedure for entering numerical values in Calibration and Configuration is as follows:

1. At the appropriate prompt, press the **Enter** button. The display shows the last (or default) value with the first digit flashing.
2. Use the **Next** button to select the desired first digit, then press the **Enter** button. Your selection is entered and the second digit flashes.
3. Repeat Step 2 until you have created your new value. If the number has less than five characters, use leading or trailing zeros for the remaining spaces. When you have configured the fifth space, the display prompts you to place the decimal point.
4. Move the decimal point with the **Next** button until it is where you want it and press the **Enter** button.

NOTE

1. The decimal point may not be placed directly after the first digit. For example, you can not enter a value as 1.2300; you must enter it as 01.230.
2. The decimal position is identified by flashing except at the position after the fifth digit. At that position (representing a whole number), the decimal point is assumed.

5. The display advances to the next menu item.

Reranging

You can access the Rerange mode in the top level menu (see Figure 17). Entry to the Mode Select menu is made (from normal operating mode) by pressing the **Next** button. The display reads **RERANGE**. You can then adjust **M1 URV** and/or **M1 LRV** in the following two submenus.

M1 URV:

To edit the upper range value, press **Enter** at the prompt **M1 URV**. Use the procedure "Entering Numerical Values" on page 28 section to edit this parameter.

M1 LRV:

Similar to **M1URV** immediately above.

Viewing the Database

You can access the View Database mode by the multi-level menu system described above. Entry to the Mode Select menu is made (from normal operating mode) by pressing the **Next** button. The display reads **RERANGE**. Use the **Next** button to get to **VIEW DB**. Acknowledge your choice of this selection by pressing the **Enter** button. The display shows the first item in the database. You can step through the database display by repeated use of the **Next** button. You can abort this procedure at any time by pressing the **Enter** button.

Viewing the Pressure Range

The values of M1LRV and M1 URV can be viewed in VIEW DB as described above.

Testing the Display

You can access the Test Display mode by the same multi-level menu system that was used to enter Reranging, Calibration, Configuration, and View Database mode. Entry to the Mode Select menu is made (from normal operating mode) by pressing the **Next** button. The display reads **RERANGE**. Use the **Next** button to get to **TST DSP**. Acknowledge your choice of this selection by pressing the **Enter** button. The display shows the first test segment pattern. You can step through the five patterns by repeated use of the **Next** button. You can abort the test at any time by pressing the **Enter** button. The five patterns are shown in Figure 18.

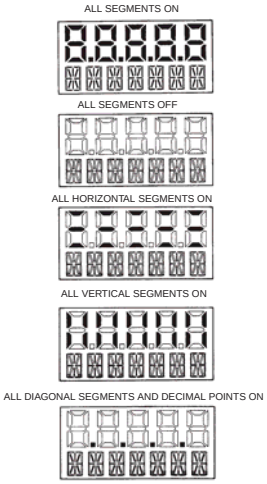

Figure 18. Display Test Segment Patterns

Error Messages

Table 4. Operation Error Messages

Parameter	Condition Tested	Error Message	Action
Normal Operation	Write Protection Enabled	WR PROT	Displays periodically to notify user that unit is in Write Protect.
	Any non-On-line Condition	OFFLINE	Notifies user of a non-On-line condition.
Startup	Database OK or corrupted	INITERR	User should perform SET GDB procedure.

4. Calibration

NOTE

1. For best results in applications where high accuracy is required, rezero the transmitter output once it has stabilized at the final operating temperature.
2. Zero shifts resulting from position effects and/or static pressure effects can be eliminated by rezeroing the transmitter output.
3. After calibrating transmitters operating with a 4 to 20 mA (or 1 to 5 V dc) output signal, check the underrange and overrange output values to ensure that they extend beyond 4 and 20 mA (or 1 and 5 V dc) respectively.

General Calibration Notes

1. Each transmitter is factory characterized over its full rated pressure range. One benefit of this process is that every transmitter can measure any applied pressure within its range limits regardless of the calibrated range. The applied pressure is measured and converted into an internal digital value of pressure. This digital value of pressure is always available whether the transmitter is calibrated or not. Calibration assures that the transmitter rated accuracy is achieved over the calibrated range.
2. The internal digital value of pressure can be displayed on the optional local display, transmitted digitally, and converted to a 4 to 20 mA analog output signal.
3. Each transmitter is factory calibrated to either a specified or a default calibrated range. This calibration optimizes the accuracy of the internal digital value of pressure over that range. If no range is specified, the default range is zero to the sensor upper range limit (URL).
4. The transmitter database has configurable values for both lower range value (LRV) and upper range value (URV). These values are used for two functions.
   a. Defining the Calibrated Range When Using Local Pushbuttons for Calibration:
      - When either **CAL LRV** or **CAL URV** is initiated from the local pushbuttons, the transmitter expects that the pressure applied at the time the button is pressed is equal to the LRV or URV value respectively.
      - This function trims the internal digital value of pressure; that is, it performs a calibration based on the application of accurate pressures equal to the values entered for LRV and URV in the transmitter database.
      - This function also sets the 4 and 20 mA output points; that is, the 4 and 20 mA points correspond to the values of LRV and URV in the database.
      - The value of LRV can be larger than the value of URV.
   b. Reranging Without the Application of Pressure:
      - Since the transmitter continually determines an internal digital value of the measured pressure from the lower range limit (LRL) to the upper range limit

(URL), the 4 and 20 mA output points can be assigned to any pressure values (within the span and range limits) without application of pressure.
      - The reranging function is accomplished by entering new database values for LRV and URV.
      - Reranging does not affect the calibration of the transmitter; that is, it does not affect the optimization of the internal digital value of pressure over a specific calibrated range.
      - If the reranged LRV and URV are not within the calibrated range, the measured values may not be as accurate as when they are within the calibrated range.
5. When the optional local display is used, the internal digital value of pressure is sent directly to the indicator.
   - The display can show any measured pressure in selected units regardless of the calibrated range and the values of LRV and URV (within the limits of the transmitter and display).
   - If the measured pressure is outside the range established by the LRV and URV values in the database, the display shows the measurement but also continually blinks to indicate that the measurement is out of range. The mA current signal is saturated at either the low or high overrange limit respectively but the display continually shows the pressure.
6. When configured for 4 to 20 mA output, the internal digital value of pressure is converted to an analog current signal.
   - The transmitter sets the output at 4 mA for the LRV and 20 mA for the URV.
   - There is an independent trim on the digital-to-analog conversion stage. This trim allows for slight adjustment of the 4 and 20 mA outputs. This compensates for any slight difference that exists between the transmitter mA output and an external reference device which is measuring the current.
   - The mA trim does not affect the calibration or the reranging of the transmitter and does not affect the internal digital value of pressure or the transmission or display of measured pressure.
   - The mA trim can be done with or without pressure applied to the transmitter.
7. Zeroing from the local display does not affect the span.

   When the transmitter is zeroed to compensate for installed position effect, the transmitter can have either LRV pressure applied (**CAL LRV**) or zero pressure applied (**CAL AT0**). If the range is zero-based, either method produces the same result. However, if the range is not zero-based, it is advantageous to have both methods available.

   For example, consider a pressure transmitter having a range of 50 to 100 psig. If it is not feasible to vent the transmitter to atmosphere for zeroing, it can be zeroed while the LRV pressure of 50 psi is applied by using the **CAL LRV** function. On the other hand, if the transmitter has been installed but there is no pressure in the process line yet, it can be zeroed while open to atmosphere by using the **CAL AT0** function.

a. Zeroing with LRV Pressure Applied (**CAL LRV**):

- Before using this zeroing function, apply a pressure to the transmitter equal to the value of LRV stored in the transmitter database.
- When you zero the transmitter, the internal digital value of the pressure is trimmed to be equal to the value of LRV stored in the database and the mA output set to 4 mA.
- If zeroing is done when the applied pressure is different from the LRV pressure value in the database, the internal digital value of pressure is biased by the difference in the values but the output is still set at 4 mA.
- The **CAL LRV** and **CAL URV** function should be used when calibrating a transmitter for a specific range with known input pressures applied for the LRV and URV.

b. Zeroing a Gauge Pressure Transmitter with Zero Pressure Applied (**CAL AT0**):

NOTE

Do **not** use the **CAL AT0** function with an absolute pressure transmitter. If an absolute pressure transmitter is vented to atmosphere, it does **not** have zero pressure applied but instead has the barometric pressure (approximately 14.7 psia) applied.

- Make sure that the applied pressure is at zero. This means venting the transmitter to atmosphere.
- When you zero the transmitter, the internal digital value of the pressure is trimmed to be equal to zero and the mA output set to an appropriate value such that the mA output is a normal 4 mA when the LRV pressure is applied later.

c. Zeroing an Absolute Pressure Transmitter

To zero an absolute pressure transmitter, the LRV can be temporarily set to the barometric pressure and a CAL LRV function performed with the transmitter vented to atmosphere. Then, the LRV can be set back to the proper value.

Calibration Setup

The following sections show setups for field or bench calibration. Use test equipment that is at least three times as accurate as the desired accuracy of the transmitter.

NOTE

It is not necessary to set up calibration equipment to rerange the transmitter to a different range. The transmitter can be accurately reranged by simply changing the lower range value and the upper range value, which are stored in the transmitter database.

Setup of Electronic Equipment

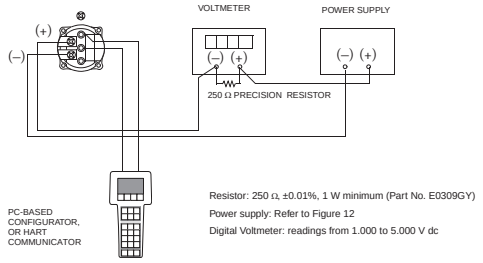

Figure 19. 4 to 20 mA Output Calibration Setup of Electronic Equipment

Field Calibration Setup

Field calibration is performed without disconnecting the process piping. This is only possible if you have a shutoff valve between the process and the transmitter and the process covers vent screw option (-V1).

If the transmitter is to be removed from the process for calibration, refer to "Bench Calibration Setup"below.

An adjustable air supply and a pressure measuring device are required. For example, a dead weight tester or an adjustable clean air supply and pressure gauge can be used. The pressure source can be connected to the transmitter with pipe fittings or it can be connected to the vent screw assembly using a calibration screw. The calibration screw has a Polyflo fitting and can be used for pressures up to 700 kPa (100 psi). It is available as Foxboro Part Number F0101ES.

To set up the equipment, refer to Figure 20 and then use the following procedure:

1. Close the shutoff valve between the process and the transmitter.
2. If a calibration screw **is** being used, remove the vent screw and replace it with the calibration screw. Connect the pressure source to the calibration screw using 6 x 1 mm or 0.250 inch tubing.
   If a calibration screw **is not** being used, remove the drain plug or the entire vent screw assembly (as applicable) from the high pressure side of the transmitter. Connect calibration tubing using a suitable thread sealant.
3. If calibrating the output signal, also connect equipment as shown in "Setup of Electronic Equipment."

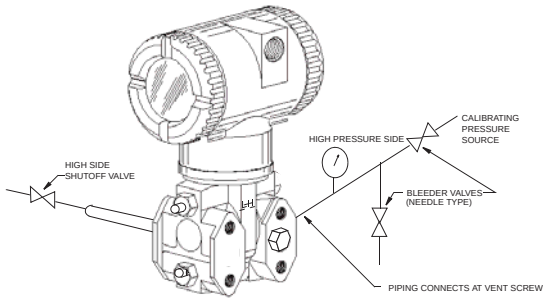

Figure 20. IAP20 and IGP20 Field Calibration Setup

Bench Calibration Setup

The bench calibration setup requires disconnecting the process piping. For calibration setup without disconnecting the process piping, refer to "Field Calibration Setup"above.

The bench calibration setup is shown in Figure 21. Connect the input piping to the high pressure side of the transmitter as shown. Vent the low pressure side of the transmitter.

If calibrating the output signal, also connect equipment as shown in "Setup of Electronic Equipment."

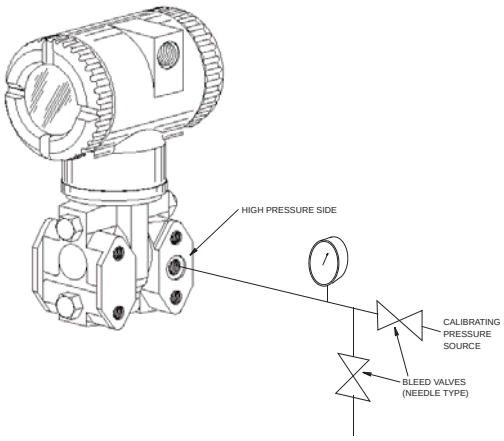

Figure 21. Bench Calibration Setup

Calibration Using a PC20

To calibrate the transmitter using a PC20 Configurator, follow the procedure in MI 020-495.

Calibration Using a PC50

To calibrate the transmitter using a PC50 Configurator, follow the procedure in MI 020-501 and MI 020-520.

Calibration Using a HART Communicator

To calibrate the transmitter using a HART Communicator, follow the procedure in MI 020-366.

Calibration Using the Optional Local Display

To access the Calibration mode (from normal operating mode), press the **Next** button. The display reads **CALIB**, the first item on the menu. Acknowledge your choice of this selection by pressing the **Enter** button. The display shows the first item in the Calibration menu.

NOTE

1. During calibration, a single change could affect several parameters. For this reason, if an entry is entered in error, re-examine the entire database or use the **Cancel** feature to restore the transmitter to its starting configuration and begin again.
2. During adjustment of 4 and 20 mA in the Calibration menu, the milliampere output does not reflect live measurement values.

Table 5. Calibration Menu

Item	Description
CAL AT0[(a)]	Calibrate at zero pressure.
CAL LRV	Calibrate with pressure at 0% of transmitter range (LRV).
CAL URV	Calibrate with pressure at 100% of transmitter range (URV).
ADJ 4mA	Adjust nominal 4 mA output.
ADJ20mA	Adjust nominal 20 mA output.
CALDATE	Enter the calibration date.
ADJ 4mA causes the following four submenus.	
A 4mAΔΔΔ	Increase 4 mA output by large step.
A 4mA∇∇	Decrease 4 mA output by large step.
A 4mAΔ	Increase 4 mA output by small step.
A 4mA∇	Decrease 4 mA output by small step.
ADJ 20mA causes the following four submenus.	
A 20mAΔΔΔ	Increase 20 mA output by large step.
A 20mA∇∇	Decrease 20 mA output by large step.
A 20mAΔ	Increase 20 mA output by small step.
A 20mA∇	Decrease 20 mA output by small step.

(a) Function not applicable to absolute pressure transmitters.

NOTE

It is not necessary to use the **ADJ4mA** or **ADJ20mA** menu selections (commonly known as mA Trim) unless there is a plant requirement to make the 4 and 20 mA output values exactly match readings on certain plant calibration equipment and the calibration operations done result in a small but unacceptable difference between the transmitter mA output and the test equipment mA readout values.

Proceed to calibrate your transmitter by using the **Next** key to select your item and the **Enter** key to specify your selection per Figures 22 and 23. At any point in the calibration you can **Cancel**, restore your prior calibration and return to the on-line mode or **Save** your new calibration.

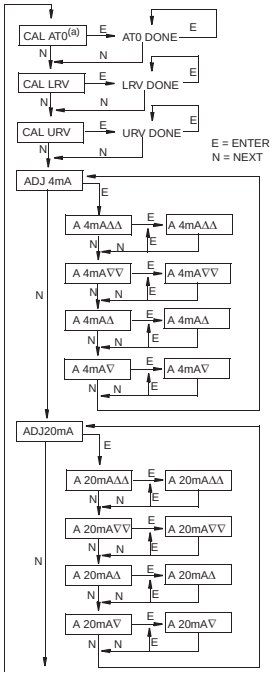

CAL AT0: To set or reset the zero point at zero pressure, apply zero differential pressure to the transmitter and, at display of **CAL AT0**, press **Enter**. This can be done whether LRV is zero or not. Completion is indicated by the display **AT0 Done**.

CAL LRV: To set or reset 0% of range input, apply differential pressure to the transmitter equal to the lower range value (LRV) in the transmitter database and, at display of **CAL LRV**, press **Enter**. Completion is indicated by the display **LRV Done**.

CAL URV: To set or reset 100% of range input, apply differential pressure to the transmitter equal to the upper range value (URV) in the transmitter database and, at display of **CAL URV**, press **Enter**. Completion is indicated by the display **URV Done**.

ADJ4mA: If you configured your transmitter operating mode as 4 to 20 mA, you can adjust the 4 mA output by going to **ADJ4mA** using the **Next** button and press **Enter**. This menu item is bypassed if you configured your transmitter for multidrop mode (poll address other than zero).

To increase the 4 mA output by a large (0.025 mA) step, press **Enter** at the display **A 4mA**ΔΔ. To decrease it by a large step, go to

Notes:
(a) Not applicable to Absolute Pressure Transmitters.

Figure 22. Calibration Structure Diagram

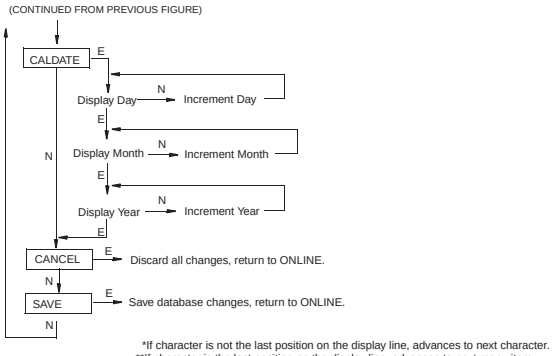

*If character is not the last position on the display line, advances to next character.
**If character is the last position on the display line, advances to next menu item.

NOTE: Commentary about this diagram immediately follows.

Figure 23. Calibration Structure Diagram (Continued)

Commentary on Figure 23

CALDATE:

This is not a required entry but can be used for recordkeeping or plant maintenance purposes. To edit the calibration date, go to **CALDATE** with the **Next** button and press **Enter**. You then can change the day, month, and year. The display shows the last date with the day flashing. Use the **Next** button to step through the menu of digits to select the desired day, then press **Enter**. Repeat this process for the month and year.

Zero Adjustment Using External Zero Button

An optional external zero adjustment mechanism in the electronics housing allows calibration at zero differential pressure (the **CAL AT0** function) or at the lower range value differential pressure (the **CAL LRV** function) without removing the electronics compartment cover. The mechanism is magnetically activated through the housing wall to prevent moisture from entering the enclosure.

To use this feature:

1. Unlatch the external zero button by turning it 90° in a counterclockwise direction so that the screwdriver slot lines up with the two holes in the face of the adjacent part. Do **not** push the button in with the screwdriver while doing this.

2. To set or reset the zero point at zero pressure, apply zero pressure to the transmitter and press the external zero button until the display reads **CAL AT0**. Release the button. The display reads **CAL WAIT** and then **RESET** (calibration is complete).

   To set or reset the 0% of range input, apply the lower range value (LRV) pressure to the transmitter and press and hold the external zero button until the display reads **CAL LRV** (it reads **CAL AT0** first). Release the button. The display reads **CAL WAIT** and then **RESET** (calibration is complete).

NOTE

If the optional display is not present, the same functions can be accomplished by depending on the length of time the external zero button is depressed. Press and hold the button for 1 to 3 seconds for **CAL AT0** or for 5 or more seconds for **CAL LRV**. Therefore, if your LRV is zero, just depress the button for a few seconds. However, if your LRV is not zero, use **caution** when using the external zero button without the optional display because you must rely strictly on the length of time the button is depressed to differentiate between **CAL AT0** and **CAL LRV**.

Other possible messages are:
DISABLD if **EX ZERO** is configured **EXZ DIS**
IGNORED if the transmitter is not in the on-line mode.
WP ENAB if write protection jumper is in write protect position.

If additional rezeroing is required after Steps 1 and 2 have been accomplished, repeat Step 2.

3. Relatch the external zero button by turning it 90° in a clockwise direction to prevent accidental pressing of the button. Do **not** push the button in with the screwdriver while doing this.

Error Messages

Table 6. Calibration Error Messages

Parameter	Condition Tested	Error Message	User Action
Password Protection	Password	BAD PWD	Bad password entered, use another.
Write Protection	Write protection enabled	REJECT	Displays when user attempts an action that is write protected.
ZERO	Internal offset too large	BADZERO	Check applied pressure, configured **M1 LRV** and configured **M1 EOFF**.
SPAN	Slope too large or too small	BADSPAN	Check applied pressure, configured **M1 LRV** and configured **M1 EFAC**.
M1 URV	M1URV > max pressure in EGU	URV>FMX	Entered pressure is greater than maximum rated pressure of transmitter. Check entry. Verify EGUs.
	M1URV < min pressure in EGU	URV<FMN	Entered pressure is less than minimum rated pressure of transmitter. Check entry. Verify EGUs.
	M1 URV = M1 LRV	LRV=URV	Cannot set span to 0. Check entry. Check **M1 LRV**.
	M1 turndown exceeds limit	BADTDWN	Check entry. Check **M1 LRV**.
M1 LRV	M1LRV > max pressure in EGU	LRV>FMX	Entered pressure is greater than maximum rated pressure of transmitter. Check entry. Verify EGUs.
	M1LRV < min pressure in EGU	LRV<FMN	Entered pressure is less than minimum rated pressure of transmitter. Check entry. Verify EGUs.
	M1 URV = M1 LRV	LRV=URV	Cannot set span to 0. check entry. Check **M1 URV**.
	M1 turndown exceeds limit	BADTDWN	Check entry. Check **M1 URV**.

5. Configuration

Configurable Parameters

The following table lists all the configurable parameters and the factory default for the IAP20-T and IGP20-T Transmitters. The factory default values have been customized if the transmitter was ordered with optional feature -C2. The table also shows which parameters are configurable with the integral vs. remote configurators.

Table 7. Configurable Parameters

Parameter	Capability	Factory Default	Configurable with		Application Requirement
			Integ. Indic.	Remote Config.	
Descriptors					
Tag Number	8 characters max	Tag Number	No	Yes	
Descriptor	16 characters max	Tag Name	No	Yes	
Message	32 characters max	Inst Location	No	Yes	
Input					
Calibrated Range	LRV to URV in units listed in (a) below	See (b) below when not specified per S.O.	Yes	Yes	
Output					
Meas. #1 Output	4 to 20 mA or Fixed Current. Specify Poll Address (1-15) for Fixed Current.	4 to 20 mA	Yes	Yes	
Meas. #1 Mode	Linear	Linear	Yes	Yes	
Meas #1 EGUs	Select from units listed in (a) below.	Same as Calibrated Range	Yes	Yes	
Meas. #2 Mode	Linear	Linear	Yes	Yes	
Meas #2 EGUs	If linear, select from units listed in (a) below	Same as Calibrated Range	Yes	Yes	
Temp. Sensor Fail Strategy	Normal oper or fail-safe	Fail-safe	Yes		
Fail-safe	High or Low	High	Yes	Yes	
External Zero	Enabled or Disabled	Enabled	Yes	Yes	
Damping	0 to 32 seconds	None	Yes	Yes	
Poll Address	0 - 15	0	Yes	Yes	
LCD Indicator (c)	Meas #1 EGU or % Lin	Meas #1 EGU	Yes	No	

Table 7. Configurable Parameters (Continued)

Parameter	Capability	Factory Default	Configurable with		Application Requirement
			Integ. Indic.	Remote Config.	

(a) psi, inHg, ftH_2O, inH_2O, atm, bar, mbar, MPa, Pa, kPa, kg/cm^2, g/cm^2, mmHg, torr, mmH_2O

(b) Span Code A: 0 to 30 inH_2O; Span Code B: 0 to 200 inH_2O; Span Code C: 0 to 30 psi; Span Code D: 0 to 300 psi; Span Code E: 0 to 3000 psi; Span Code F: 0 to 5000 psi.

(c) Measurement #2 can be displayed at any time by pressing the **Enter** button regardless of the local display configuration. This reverts to Measurement #1 or % Lin (as configured) when power is cycled off and on.

Configuration Using a PC20

To configure the transmitter using a PC20 Configurator, follow the procedure in MI 020-495.

Configuration Using a PC50

To configure the transmitter using a PC50 Configurator, follow the procedure in MI 020-501 and MI 020-520.

Configuration Using a HART Communicator

To configure the transmitter using a HART Communicator, follow the procedure in MI 020-366.

Configuration Using the Optional Local Display

You can access the Configuration mode by the same multi-level menu system that was used to enter Calibration mode. Entry to the Mode Select menu is made (from normal operating mode) by pressing the **Next** button. The display reads **CALIB**, the first item on the menu. Press the **Next** button again to get to the second item on the menu, **CONFIG**. Acknowledge your choice of this selection by pressing the **Enter** button. The display shows the first item in the Configuration menu. You can then configure items shown in the following table. The standard factory default configuration is also given in this table.

The standard factory default configuration is not used if custom configuration option -C2 has been specified. Option -C2 is a full factory configuration of all parameters to the user's specifications.

NOTE

1. You can configure most parameters using the local display. However, for more complete configuration capability, use a HART Communicator or PC-Based configurator.

2. During configuration, a single change can affect several parameters. For this reason, if an entry is entered in error, re-examine the entire database or use the **Cancel** feature to restore the transmitter to its starting configuration and begin again.

Table 8. Configuration Menu

Item	Description	Initial Factory Configuration
POLLADR	Poll Address: 0 - 15	0
EX ZERO[(a)]	External Zero: enable or disable	Enable
S2 FAIL	Temperature Sensor Failure Strategy: S2FATAL or S2NOFTL	S2FATAL
OUT DIR	4 to 20 mA Output: forward or reverse	Forward
OUTFAIL	4 to 20 mA Output: fail mode output - low or high	High
OFFL MA	4 to 20 mA Output in offline mode - last or user set	USER MA
DAMPING	Damping: none, 1/4, 1/2, 1, 2, 4, 8, 16, or 32 seconds	None
M1 MODE	Output: linear or type of square root[(b)]	Linear
M1DISP	Local Indicator Display in linear mode: in percent or engineering units	M1EGU
M1 EGU	User-Defined Engineering Units	inH_2O or psi
M1EOFF	Offset applied to the Primary Value	0
M1 URV	Primary Upper Range Value	URL
M1 LRV	Primary Lower Range Value	0
M2 MODE	Output: linear or type of square root	Linear
M2 EGU	User-Defined Engineering Units	Same as M1 EGU
DISPLAY	Display M1, M2, or Toggle between M1 and M2	M1
CALDATE	Calibration Date	- - -
ENA PWD	Enable password; no password, configuration only, or configuration and calibration	NO PWD
CFG PWD	User set configuration password (six characters)	- - -
CAL PWD	User set calibration password (six characters)	- - -
SET GDB	Rewrite all calibration and configuration values with default values	- - -

(a) Applies only if transmitter contains External Zero option.

(b) Square root is not applicable to absolute pressure, gauge pressure, and flange level measurement.

Proceed to configure your transmitter by using the **Next** button to select your item and the **Enter** button to specify your selection per the following three figures. At any point in the configuration you can **Cancel** your changes and return to the on-line mode, or **Save** your changes.

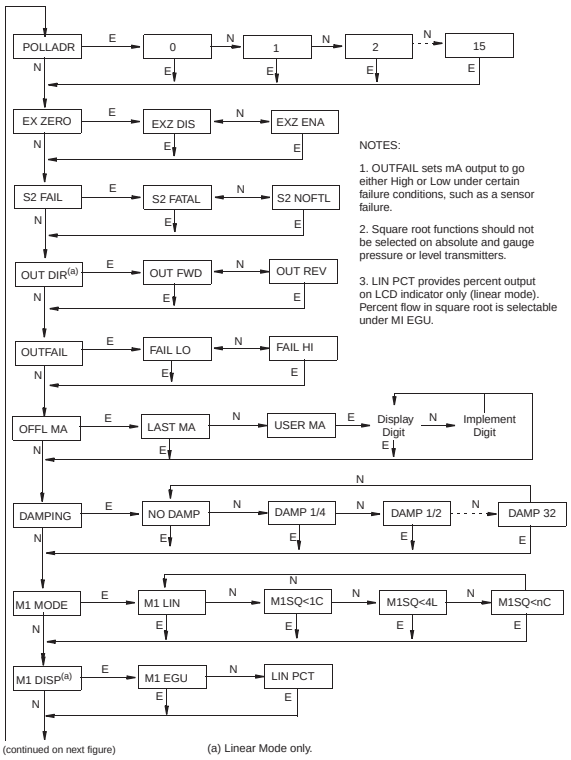

NOTES:

1. OUTFAIL sets mA output to go either High or Low under certain failure conditions, such as a sensor failure.

2. Square root functions should not be selected on absolute and gauge pressure or level transmitters.

3. LIN PCT provides percent output on LCD indicator only (linear mode). Percent flow in square root is selectable under MI EGU.

Figure 24. Configuration Structure Diagram

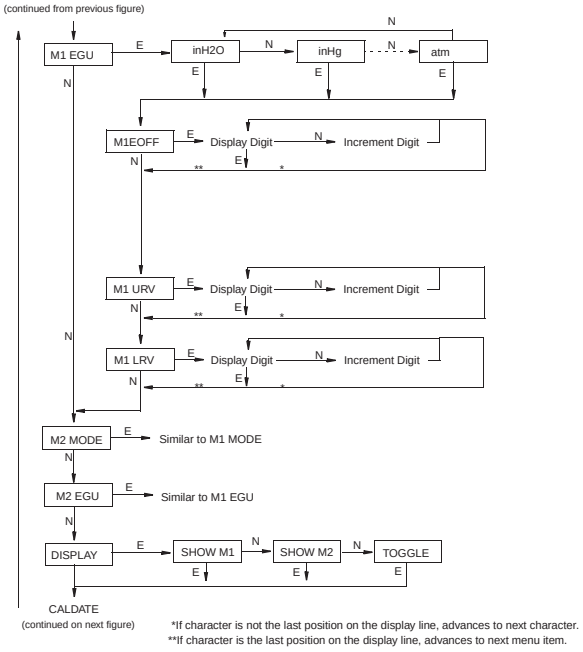

Figure 25. Configuration Structure Diagram (Continued)

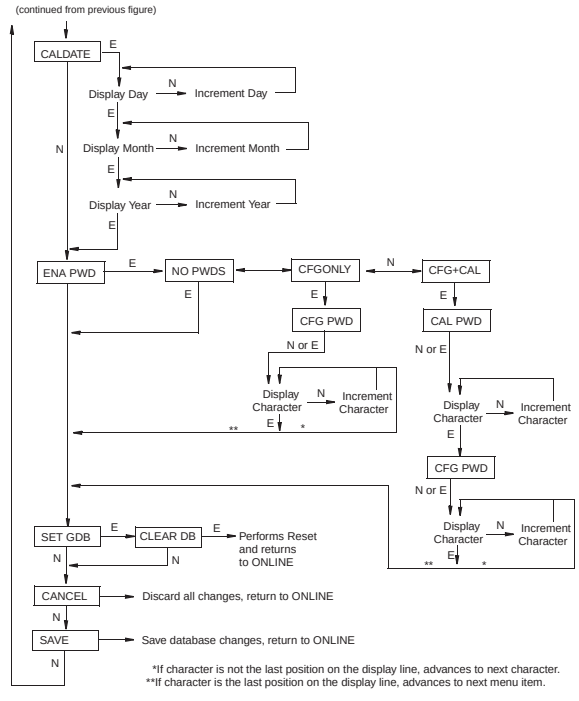

Figure 26. Configuration Structure Diagram (Continued)

Commentary on Configuration Structure Diagram

In general, use the **Next** button to select your item and the **Enter** button to specify your selection.

POLLADR:

To configure the transmitter poll address, press **Enter**. Use the **Next** button to select an address of **0** through **15**, then press **Enter**. An address of 1 through 15 is used for multidrop mode with a fixed mA output.

EX ZERO:

The External Zero feature allows the optional external zero pushbutton to be disabled for additional security. To configure this feature, go to **EX ZERO** with the **Next** button and press **Enter**. Use the **Next** button to select **EXZ DIS** or **EXZ ENA** and press **Enter**.

S2 FAIL:

The temperature sensor compensates for changes in temperature in the transmitter electronics. Failure of this sensor can cause a 4 to 20 mA accuracy change of up to 0.25%. The **S2 FAIL** feature allows you to specify action (or no action) if such a failure occurs. To configure this feature, go to **S2 FAIL** with the **Next** button and press **Enter**. Use the **Next** button to select **S2 FATAL** (to have the output go to that configured in **OUTFAIL**) or **S2 NOFTL** (to continue operation with a temperature sensor failure). This parameter has no effect if **POLLADR** is configured to any number from **1** through **15**.

OUT DIR:

To configure the Output Direction, go to **OUT DIR** with the **Next** button and press **Enter**. Use the **Next** button to select **OUT FWD** (4 - 20 mA) or **OUT REV** (20 - 4 mA) and press **Enter**. This parameter has no effect if **POLLADR** is configured to any number from **1** through **15**.

OUTFAIL:

The Outfail feature provides high or low output with certain malfunctions. To configure the fail mode output, go to **OUTFAIL** with the **Next** button and press **Enter**. Use the **Next** button to select **FAIL LO** or **FAIL HI** and press **Enter**. This parameter has no effect if **POLLADR** is configured to any number from **1** through **15**.

OFFL MA:

The Off-line mA feature enables you to set the output to a specified value or to the last value if the transmitter goes off-line. To configure the off-line output, go to **OFFL MA** with the **Next** button and press **Enter**. Use the **Next** button to select **LAST MA** or **USER MA** and press **Enter**. If you selected **USER MA**, press **Enter** again at the display of digits. Then use the **Next** button to step through the library of digits to select the desired first digit, then press **Enter**. Your selection is entered and the second character flashes. Repeat this procedure until you have entered the last digit. Then use the **Next** button to move the decimal point to its desired location and press **Enter**. The display advances to the next menu item.

DAMPING:

To configure additional damping, go to **DAMPING** with the **Next** button and press **Enter**. Use the **NEXT** button to select **NO DAMP**, **DAMP 1/4**, **DAMP 1/2**, **DAMP 1**, **DAMP 2**, **DAMP 4**, **DAMP 8**, **DAMP 16**, or **DAMP 32** and press **Enter**.

M1 MODE:

To configure the mode of the primary output, go to **M1 MODE** with the **Next** button and press **Enter**. Use the **Next** button to select **M1 LIN** and press **Enter**. **M1SQ<1C** (square root with cutoff below 1% of calibrated pressure range), **M1SQ<4L** (square root with linear below 4% of calibrated pressure range), or **M1SQ<nC** (square root with user configured cutoff specified between 0 and 20% of the flow range) is not applicable to absolute or gauge pressure measurement.

M1 DISP:

To configure the optional local indicator to show engineering units or percent, go to **M1 DISP** with the **Next** button and press **Enter**. Use the **Next** button to select **M1 EGU** or **LIN PCT** and press **Enter**. **LIN PCT** only provides percent readings on the local display. The M1 engineering unit is used for remote communication of Measurement #1, even if **LIN PCT** is selected.

M1 EGU:

To configure pressure or flow engineering units for your display and transmission, go to **M1 EGU** with the **Next** button and press **Enter**. Because **M1 MODE** is configured as **M1 LIN**, you are asked to specify one of the following pressure labels: **psi**, **inHg**, **ftH$_2$O**, **inH$_2$O**, **atm**, **bar**, **mbar**, **MPa**, **Pa**, **kPa**, **kg/cm^2**, **g/cm^2**, **mmHg**, **torr**, or **mmH$_2$O**. Your transmitter then automatically adjusts **M1EFAC** (engineering factor), **M1 URV** (upper range value), and **M1 LRV** (lower range value). **M1EOFF** is set to zero.

M1EOFF:

You can introduce an offset by entering a nonzero value for **M1EOFF**. The offset affects the value of PV that is transmitted in engineering units, transmitted as an analog mA signal, and displayed in the (optional) local display. This feature can be used in such applications as an elevated water storage tank where the transmitter is at grade level but the output is to correspond to the level of the tank. It can also be used for a grade level water storage tank where the transmitter is installed above the bottom of the tank and the output is to correspond to the level in the tank.

M1 URV:

To edit the upper range value, press **Enter** at the prompt **M1 URV**. Use the procedure "Entering Numerical Values" in Operation section to edit this parameter.

M1 LRV:

Similar to **M1URV** immediately above.

M2 MODE:

M2 is a secondary measurement that is read by the Model 275 HART Communicator and can be displayed on the optional display. You might use this feature to display M1 in your primary pressure units and M2 in a different set of pressure units. To configure this parameter, go to **M2 MODE** with the **Next** button and press **Enter**. Use the next button to select **M2 LIN** and press **Enter**.

M2 EGU:

Similar to **M1 EGU**.

DISPLAY:

To display M1, M2, or to toggle between M1 and M2, go to **DISPLAY** with the **Next** button and press **Enter**. Use the **Next** button to select **SHOW M1**, **SHOW M2**, or **TOGGLE** and press **Enter**.

CALDATE:

This is not a required entry but can be used for record-keeping or plant maintenance purposes. To edit the calibration date, go to **CALDATE** with the **Next** button and press **Enter**. You then can change the day, month, and year. The display shows the last date with the day flashing. Use the **Next** button to step through the library of digits to select the desired day, then press **Enter**. Repeat this process for the month and year.

ENA PWD:

To enable or disable the password feature, go to **ENA PWD** with the **Next** button and press **Enter**. Use the **Next** button to select **NO PWDS** (password not required for either calibration or configuration), **CFGONLY** (password required to configure but not to calibrate), or **CFG+CAL** (passwords required to both configure and calibrate) and press **Enter**.

If you selected **CFG ONLY**, the display changes to **CFG PWD**. Press either the **Next** or **Enter** button. Use the **Next** button to step through the library of characters to select the desired first character, then press **Enter**. Your selection is entered and the second character flashes. Repeat this procedure until you have created your password. If the password has less than six characters, use blanks for the remaining spaces. When you have configured the sixth space, the display advances to the next menu item.

If you selected **CFG+CAL**, the display changes to **CAL PWD**. To create the Calibration password, press either the **Next** or **Enter** button. Use the **Next** button to step through the library of characters to select the desired first character, then press **Enter**. Your selection is entered and the second character flashes. Repeat this procedure until you have created your password. If the password has less than six characters, use blanks for the remaining spaces. When you have configured the sixth space, the display advances to **CFG PWD**. Use the same procedure to create the configuration password.

NOTE

In normal operation, the CAL PWD allows access to only calibration mode. The CFG PWD allows access to both configuration and calibration.

CAUTION

Record your new password before saving changes to the database.

SET GDB:

If your transmitter database becomes corrupted and you receive an **INITERR** message upon startup, this function enables you to rewrite all calibration and configuration values with default values.

CAUTION

Any calibration and configuration values that you have entered will be lost. Therefore, **SET GDB** should **not** be selected if your transmitter is functioning normally.

Character Lists

Table 9. Alphanumeric Character List

Character List*	
@	'
, (comma)	(
A-Z (uppercase)	)
[	*
\	+
]	-
^	.
_ (underscore)	/
space	0-9
!	:
“	;
#	<
$	>
%	=
&	?

*List only applies to a HART Communicator not to the optional local display.

Table 10. Numeric Character List

Character List
–
. (decimal point)
0 through 9

Error Messages

Table 11. Configuration Error Messages

Parameter	Condition Tested	Error Message	User Action
Password Protection	Password	BAD PWD	Bad password entered, use another.

Table 11. Configuration Error Messages (Continued)

Parameter	Condition Tested	Error Message	User Action
Write Protection	Write Protection Enabled	REJECT	Displays when user attempts an action that is write protected.
M1EFAC	M1EFAC < 0	-M1EFAC	Negative **M1 EFAC** is not valid. Change **M1 EFAC** to positive value.
	M1EFAC = 0	0M1EFAC	**M1 EFAC** = 0 is not valid. Change **M1 EFAC** to positive value.
M1 URV	M1URV > max pressure in EGU	URV>FMX	Entered pressure is greater than maximum rated pressure of transmitter. Check entry. Verify EGUs.
	M1URV < min pressure in EGU	URV<FMN	Entered pressure is less than minimum rated pressure of transmitter. Check entry. Verify EGUs.
	M1 URV = M1 LRV	LRV=URV	Cannot set span to 0. Check entry. Check **M1 LRV**.
	M1 turndown exceeds limit	BADTDWN	Check entry. Check **M1 LRV**.
M1 LRV	M1LRV > max pressure in EGU	LRV>FMX	Entered pressure is greater than maximum rated pressure of transmitter. Check entry. Verify EGUs.
	M1LRV < min pressure in EGU	LRV<FMN	Entered pressure is less than minimum rated pressure of transmitter. Check entry. Verify EGUs.
	M1 URV = M1 LRV	LRV=URV	Cannot set span to 0. Check entry. Check **M1 URV**.
	M1 turndown exceeds limit	BADTDWN	Check entry. Check **M1 URV**.
M2EFAC	M2EFAC < 0	-M2EFAC	Negative **M2 EFAC** is not valid. Change **M2 EFAC** to positive value.
	M2EFAC = 0	0M2EFAC	**M2 EFAC** = 0 is not valid. Change **M2 EFAC** to positive value.

6. Maintenance

DANGER

For nonintrinsically safe installations, to prevent a potential explosion in a Division 1 hazardous area, de-energize transmitters before you remove threaded housing covers. Failure to comply with this warning could result in an explosion resulting in severe injury or death.

Error Messages

For error messages displayed on the HART Communicator refer to MI 020-366.

Parts Replacement

Parts replacement is generally limited to the electronics module assembly, housing assembly, sensor assembly, terminal block assembly, cover O-rings, and optional display. For part numbers relating to the transmitter and its options, see PL 009=007.

Replacing the Terminal Block Assembly

1. Turn off transmitter power source.
2. Remove the Field Terminals and the Electronics compartment covers by rotating them counterclockwise. Screw in cover lock if applicable.
3. Remove the digital display (if applicable) as follows: grasp the two tabs on the display and rotate it about 10° in a counterclockwise direction.
4. Remove the electronics module from the housing by loosening the two captive screws that secure it to the housing. Then pull the module out of the housing far enough to gain access to the cable connectors on the rear of the module.
5. Remove the four socket head screws securing the terminal block.
6. Disconnect the terminal block cable connector from the electronics module.
7. Remove the terminal block and the gasket under it.
8. Connect the new terminal block cable connector to the electronics module.
9. Install the new terminal block and new gasket and reinstall the four screws to 0.67 N·m (6 in·lb) in several even increments.
10. Reinstall the electronics module (and digital display if applicable).
11. Reinstall the covers onto the housing by rotating them clockwise to seat the O-ring into the housing and then continue to hand tighten until the each cover contacts the housing metal-to-metal. If cover locks are present, lock the cover per the procedure described in “Cover Locks” on page 19.
12. Turn on transmitter power source.

Replacing the Electronics Module Assembly

To replace the electronics module assembly, refer to Figure 27 and proceed as follows:

1. Turn off transmitter power source.
2. Remove the electronics compartment cover by rotating it counterclockwise. Screw in cover lock if applicable.
3. Remove the digital display (if applicable) as follows: grasp the two tabs on the display and rotate it about 10° in a counterclockwise direction. Pull out the display and disconnect its cable.
4. Remove the electronics module from the housing by loosening the two captive screws that secure it to the housing. Then pull the module out of the housing far enough to gain access to the cable connectors on the rear of the module.

CAUTION

The electronics module is “one assembly” at this point and is electrically and mechanically connected to topworks with a flexible ribbon signal cable, a 2-wire power cable, and in some cases, a cable for an external zero pushbutton. Do **not** exceed the slack available in these cables when removing the assembled module.

5. Unplug all cable connectors from the rear of the electronics module and place the module on a clean surface.
6. Predetermine connector orientation, then insert the cable connectors into the replacement module. Replace the module in the housing using care not to pinch the cables between the module and the housing. Tighten the two screws that secure the module to the housing.
7. Connect the cable from the digital display to the electronics module. Ensure that the O-ring is fully seated in the display housing. Then, holding the digital display by the tabs at the sides of the display, insert it into the housing. Secure the display to the housing by aligning the tabs on the sides of the assembly and rotating it about 10° in a clockwise direction.
8. Reinstall the cover onto the housing by rotating it clockwise to seat the O-ring into the housing and then continue to hand tighten until the cover contacts the housing metal-to-metal. If cover locks are present, lock the cover per the procedure described in “Cover Locks” on page 19.
9. Turn on transmitter power source.

The module replacement procedure is now complete.

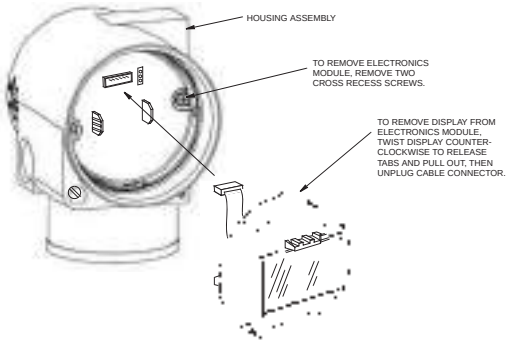

Figure 27. Replacing the Electronics Module Assembly and Display

Removing and Reinstalling a Housing Assembly

To remove and reinstall a housing assembly, refer to Figure 27 and proceed as follows:

1. Remove the electronics module per Steps 1 through 5 in the previous procedure.
2. If your housing has an anti-rotation screw, remove the red lacquer from the screw recess. Turn the screw three full turns counterclockwise.
3. If your housing has a retention clip, remove the red lacquer from the screw recess. Remove the screw completely, and slide the clip off the housing. Save the clip and screw for future use,
4. Remove the housing by rotating it counterclockwise (when viewed from the top). Use caution to avoid damaging the sensor cable.
5. Inspect the sensor O-ring for damage. If the O-ring is damaged, replace it with the appropriate O-ring. (See parts list for your transmitter). Lubricate the O-ring with silicone lubricant (Foxboro Part Number 0048130 or equivalent). Verify that the O-ring is situated in the groove of the neck.

WARNING

Failure to reuse or install the proper O-ring for a CSA labeled product violates ANSI / ISA 12.27.01.

6. Feed the sensor cable through the housing neck into the electronics compartment.
7. Screw the housing onto the sensor neck until it bottoms. Do not over tighten. Be careful not to damage the sensor cable or dislodge the neck O-ring.

8. If your housing has an anti-rotation screw, engage the screw until it touches the sensor neck and back it off 1/8th turn. It is important that the screw is not touching the sensor. Fill the screw recess with red lacquer (Foxboro Part Number X0180GS or equivalent). the housing may then be rotated up to one full turn counterclockwise for optimum access.
9. If your housing has a retention clip, insert the clip over the boss in the housing neck so that the hole in the clip is aligned with the hole in the boss. Install the screw but do not tighten. Rotate the housing up to one full turn counterclockwise for optimum access. Tighten the retention clip screw and fill the screw recess with red lacquer (Foxboro Part Number X0180GS or equivalent). The housing can still be rotated for optimum access.
10. Reinstall the electronics module per Steps 6 through 9 in the previous procedure.

Adding the Optional Display

To add the optional display, refer to Figure 27 and proceed as follows:

1. Turn off transmitter power source.
2. Remove the electronics compartment cover by rotating it counterclockwise. Screw in cover lock if applicable.
3. Plug the display into the receptacle at the top of the electronics assembly.
4. Ensure that the O-ring is seated in its groove in the display housing. Then insert the display into the electronics compartment by grasping the two tabs on the display and rotating it about 10° in a clockwise direction.
5. Install the new cover (with a window) onto the housing by rotating it clockwise to seat the O-ring into the housing and then continue to hand tighten until the cover contacts the housing metal-to-metal. If cover locks are present, lock the cover per the procedure described in “Cover Locks” on page 19.
6. Turn on transmitter power source.

Replacing the Sensor Assembly

To replace the sensor assembly, refer to Figures 28 and 29 and proceed as follows:

1. Remove the electronics module as described above.
2. Remove the housing as described above.
3. Remove the process covers from sensor by removing two hex head bolts.
4. Replace the gaskets in the process covers.
5. Install the process covers and housing on the new sensor. Torque cover bolts to 100 N·m (75 lb·ft) in several even increments. Torque values are 68 N·m (50 lb·ft) when 316 ss bolts are specified; 75 N·m (55 lb·ft) when B7M bolts are specified.
6. Reinstall electronics module.
7. Pressure test the sensor and process cover assembly by applying a hydrostatic pressure of 150% of the maximum static and overrange pressure rating to both sides of the process cover/sensor assembly simultaneously through the process connections. Hold

pressure for one minute. There should be no leakage of the test fluid through the gaskets. If leakage occurs, retighten the cover bolts per Step 5 (or replace the gaskets) and retest.

CAUTION
Perform hydrostatic test with a liquid and follow proper hydrostatic test procedures.

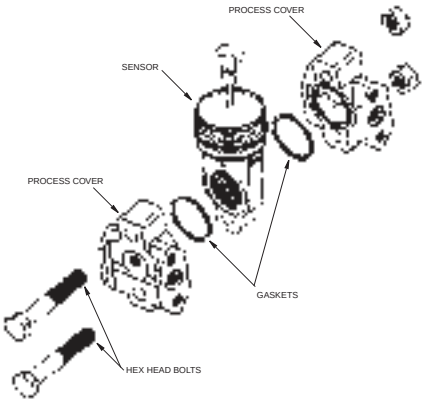

Figure 28. Replacing the Sensor Assembly

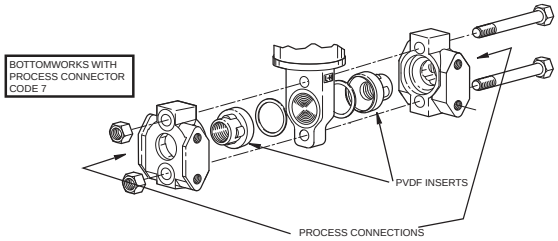

Figure 29. Replacing the Sensor Assembly (pvdf Inserts)

Rotating Process Covers for Venting

As received, your IASPT Transmitter provides sensor cavity draining without the need for side drain connections, regardless of whether the transmitter is mounted vertically or horizontally. Sensor cavity venting is provided by mounting the transmitter horizontally or with the optional vent screw (-V). However, if you did not specify this option, you can still achieve venting (instead of draining) with vertical mounting by rotating the process covers.

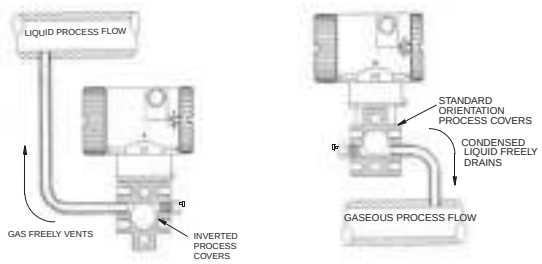

Figure 30. Sensor Cavity Venting and Draining

To rotate the process covers, refer to Figure 28 and proceed as follows:

1. Turn off the transmitter power source and remove the transmitter from the process.
2. Remove the process covers from sensor by removing two hex head bolts.

3. Replace gaskets in process covers.
4. Rotate the process covers so that the longer tab is at the bottom.
5. Reinstall process covers and bolts. Torque cover bolts to 100 N·m (75 lb·ft) in several even increments. Torque values are 68 N·m (50 lb·ft) when 316 ss bolts are specified; 75 N·m (55 lb·ft) when B7M bolts are specified.
6. Pressure test the sensor and process cover assembly by applying a hydrostatic pressure of 150% of the maximum static and overrange pressure (see "Standard Specifications" on page 4) to both sides of the process cover/sensor assembly simultaneously through the process connections. Hold pressure for one minute. There should be no leakage of the test fluid through the gaskets. If leakage occurs, retighten the cover bolts per Step 4 or replace the gaskets and retest.

CAUTION
Perform hydrostatic test with a liquid and follow proper hydrostatic test procedures.

Index

C
Calibration
Using a PC20 36
Using a PC50 Configurator 36
Using the Optional Local Display 36
Calibration Notes 31
Calibration Setup 33
Configuration 43
Using a HART Communicator 44
Using a PC20 44
Using a PC50 Configurator 44
Using the Optional Local Display 44
Cover Locks 19

D
Display, Positioning the 19

E
Error Messages
Calibration 41
Configuration 52

H
Housing, Positioning the 18

I
Identification 2
Installation 15

M
Maintenance 48, 55
Mounting 15

O
Operation Via Local Display 27

P
Parameters, Configurable 43

Parts Replacement 55
Piping, Typical Transmitter 16

R
Reference Documents 1

S
Specifications
  Product Safety 10
  Standard 4

W
Wiring 20
Write Protect Jumper, Setting the 19

Z
Zero Adjustment Using External Zero Button 39

ISSUE DATES
DEC 2001
OCT 2003
APR 2004
FEB 20-05
FEB 2006
AUG 2006
OCT 2007
JUL 2008
MAY 2010

Vertical lines to the right of text or illustrations indicate areas changed at last issue date.

Invensys Operations Management
5601 Granite Parkway Suite 1000
Plano, TX 75024
United States of America
http://www.iom.invensys.com

Global Customer Support
Inside U.S.: 1-866-746-6477
Outside U.S.:1-508-549-2424 or contact your local Invensys representative.
Email: support@invensys.com
Website: http://support.ips.invensys.com

Invensys, Foxboro, and I/A Series are trademarks of Invensys plc, its subsidiaries, and affiliates.
All other brand names may be trademarks of their respective owners.

Copyright 2001-2010 Invensys Systems, Inc.
All rights reserved

OPERATING, STORAGE & TRANSPORTATION CONDITIONS
VOGT DDT&S ITEM#23 VOGT PO#V0008697
IGP20-T22B01F-M3H1T VOGT PROJECT#V17491
W/CERT-E & M4TPHPS-4-XP VOGT PROJECT NAME: AMATA ABPR5

OPERATING, STORAGE, AND TRANSPORTATION CONDITIONS

51HNB10CP001
51HNB10CP002
51HNB10CP003
51HNB10CP004
52HNB10CP001
52HNB10CP002
52HNB10CP003
52HNB10CP004

III. OPERATION:

Assure that all installation procedures have been completed.

Check to determine that all connections are pressure tight.

Assure that nuts have been re-torqued to their proper values as specified in Table 1.

Inspect to be sure that glass is clean and free of any damage such as cracks, scratches, pits, and chips.

Gages should be brought into service slowly. To avoid excessive thermal shock or mechanical stress on the glass or chambers, the connecting valves must open slightly, and the gage temperature and pressure allowed to slowly equalize with the vessel.

If the gage is equipped with valves which have a ball check, the valves must be opened all the way after pressure and temperature have equalized to permit operation of the ball check in the event of gage failure. Valves equipped with automatic ball checks may cause misreading of the gage where the liquid level fluctuates rapidly causing the ball checks to accidentally seat.

The gage should be periodically blown down to keep the inside glass surface clean. Blowdown frequency is best determined by plant personnel most familiar with the specific application. Quest-Tec recommends no more than once per week.

Blowdown Procedure:

1. Close both the steam and water valves between the boiler drum and the water gage.
2. Open the drain valve fully on the bottom of the water column or water gage.
3. Crack open the steam valve and allow to pass through the gage for 15 seconds.
4. Close the steam valve.
5. Close the drain valve, and slowly open the gage valves allowing pressure to build slowly.

IV. MAINTENANCE

Maintenance should only be undertaken by qualified experienced personnel who are familiar with this equipment and have read and understood all the instructions in this manual.

During system shutdown, the gage valves should be left open to permit the gage to lose pressure and cool with the rest of the system. Failure to leave the valves open during system shutdown will trap high pressure fluid in the gage.

The user must determine upon evaluation of his or her own operating experience an appropriate maintenance schedule necessary for the specific application. Realistic maintenance schedules can only be determined with full knowledge of the services and application situation involved.

Maintenance Inspection

Glass

Regular and careful attention must be given to the cleaning and inspection of glass. Glass that is etched or even slightly scratched is weakened and may break under pressure. Cleaning of Glass

Keep glass clean using a commercial glass cleaner. DO NOT use wire brushes, metal scraper, or any device which could scratch the glass.

Inspect the surface of the glass for any signs of clouding, etching, scratching or deep physical damage such as bruises, checks, or corrosion that extends through the outer surface of the glass into the interior. Shining a light at approximately a 45° angle will aid in detecting some of these conditions, which will glisten more brightly than the surrounding glass when reflecting light. Detection of any such problem areas or any surface wear is sufficient evidence of damage. Immediately take steam-water gage out of service. Do not proceed with operation of steam-water gage until glass has been replaced.

Shields (ST-450/1000/1600, only)

Shields which show any signs of clouding, wear, or deterioration are an indication that the gage glass has been exposed, or could soon become exposed to the contained fluid. Immediately take steam-water gage out of service. Do not proceed with operation of steam-water gage until shields and glass have been replaced.

Gaskets

A gage which leaks at the gasket must be immediately taken out of service. Do not proceed with operation of water gage until glass, gaskets, and cushions have been replaced.

Spring Washers

Carefully examine spring washers for evidence of cracking or flattening.

Connections

A gage which leaks at the connections should be taken out of service, and its connections should be remade using a good grade of high temperature pipe sealant.

Removal

Do not attempt to remove the water gage from connecting piping, unless the gage has been relieved of all pressure, has been allowed to reach ambient temperature, and has been drained of all fluid.

Disassembly

1. Lay gage on bench.
2. Hold gage firmly, and loosen nuts starting at both ends of each section and then proceeding from both ends to the center of each section (reverse order of Figure 1).
3. Remove nuts and spring washers.

Steam-Trac Water Gage Model Numbering

ST - 1000 - 91

1000: Working Steam Pressure (WSP) Rating in PSI

91: Glass Size X Sections (*Example Shown: Size 9 Glass, One Section*)

Spare Part Kits for Steam-Trac Water Gages	
Description	*Part Number*
ST-300/350, Size 4 Glass, Gasket Kit	1-011-30-304
ST-300/350, Size 5 Glass, Gasket Kit	1-011-30-305
ST-300/350, Size 6 Glass, Gasket Kit	1-011-30-306
ST-300/350, Size 7 Glass, Gasket Kit	1-011-30-307
ST-300/350, Size 8 Glass, Gasket Kit	1-011-30-308
ST-300/350, Size 9 Glass, Gasket Kit	1-011-30-309
ST-450/600/1000/1600, Size 6 Glass, Shield, Gasket Kit	1-011-30-606
ST-450/600/1000/1600, Size 7 Glass, Shield, Gasket Kit	1-011-30-607
ST-450/600/1000/1600, Size 8 Glass, Shield, Gasket Kit	1-011-30-608
ST-450/600/1000/1600, Size 9 Glass, Shield, Gasket Kit	1-011-30-609
ST-300/350, U-Bolt (1), Nuts (2) Washers (2) Kit	1-012-30-300
ST-450/600, Stud (1), Nuts (2), Washers (4) Kit	1-012-30-600
ST-1000, Stud (1), Nuts (2), Washers (4) Kit	1-012-30-100
ST-1600, Stud (1), Nuts (2), Washers (4) Kit	1-012-30-160

Quest-Tec Steam-Trac products are designed and equipped specifically for steam service and in compliance to ASME Section 1, PG60. Steam service, unlike service for process, is characterized by frequent cycling with a corresponding increase and decrease of temperature and pressure. We also manufacture a complete line of water columns, and remote level indicators in full compliance to ASME Section 1, PG60, as well as a full line of process glass and magnetic level gages.

Quest-Tec Solutions Inc.
13960 South Wayside ● Houston, TX 77048 ● USA
Tel: +1 (281) 240-0440 ● +1 (281) 240-2440 ● sales@questtecsolutions.com
www.questtecsolutions.com

4. Tap covers with rubber hammer as needed to loosen, and remove.
5. Remove cushions, glass, shields, and gaskets.
6. Tap chamber or remaining covers as necessary with rubber hammer to break loose, and remove remaining components.
7. All removed glass, cushions, gaskets, and shields must be disposed of, and under no circumstances should be re-used and installed on a gage.
8. Clean the glass seating surfaces on the chamber and cover with a soft metal scraper (preferably brass). Make sure that all burrs, rust, and bits of old gasket are removed.
9. Extreme care must be taken to avoid gouging or scoring seating surfaces. Failure to properly clean gasket surfaces may result in gasket leaks and high stress points which may cause glass breakage.

Reassembly: ST-350

1. Clean threads U-bolts, and nuts to remove all paint, rust, and scale. Apply a light coat of oil to threads.
2. Refer to exploded view, Figure 4a.
3. Place the U-Bolts, under the chamber with vision slot up.
4. Install one sealing gasket, one glass, and one cushion over the vision slot. Verify that the molded prism side of the glass is facing down towards the chamber vision slot.
5. Carefully work the gage cover onto the U-bolts, being sure to keep the gasket/glass/cushion stack in position.
6. Install one spring washer under each nut (Fig. 3).
7. Install nuts. Using a torque wrench, tighten nuts in five foot-pound increments, following the sequence in Figure 1 until the torque value Table 1 for the specific water gage is reached.
8. Carefully inspect the vision slots on the reassembled gage to verify that the gaskets have remained in position.

Figure 3: Spring Washer Stacks

ST-350

ST-450
ST1000
ST-1600

Reassembly: ST-450, ST-1000 and ST-1600

1. Clean threads on studs, and nuts to remove all paint, rust, and scale. Apply a light coat of oil to threads.
2. Refer to exploded view, Figure 4b (ST-450 is shown, with ST-1000 and ST-1600, the studs will pass through the chamber).
3. Thread a nut to one end of each stud, add spring washer stack, and insert studs through bottom cover and lay out covers on bench, side by side, with the chamber. Use chamber to space covers and line them up with vision slots.
4. Install one cushion, one glass, one shield and finally sealing gasket inside the cover. (Note: HQ Mica shields are often supplied in one or more pieces. The thicker of two pieces should be placed on the process side.)
5. Carefully work the gage chamber onto the studs, being sure to keep the cushion/glass/shield/gasket stack in position.
6. Place gasket, shield, glass and cushion on to the remaining vision slot
7. Install cover in place being careful to maintain components aligned inside.
8. Install two spring washer under each nut (Fig. 3).
9. Install nuts. Using a torque wrench, tighten nuts in five foot-pound increments, following the sequence in Figure 1 until the torque value shown in Table 1 for the specific water gage is reached.

Figure 4A

Figure 4B

Receipt and Inspection:

[illegible]

Placing The Gage In Service

[illegible] *It is normal for thread lubricant to emit vapor as it heats.*

[illegible]

Operation:

[illegible]

Note: It is recommended that trip or alarm circuits that are actuated by the equipment being blown-down are bypassed to prevent false alarms during the blow-down process.

Periodic Maintenance:

[illegible]

Port Window Replacement

[illegible] ***The gage must not be serviced unless isolated and all internal pressure is bled to atmosphere. Never attempt to service the gage when pressurized.***

1. Close isolation valves and drain liquid from Gage.
2. Loosen then remove the 4 Bolts fastening the Cover to the Gage; remove Cover from Gage.
3. Remove window components: Glass, Outer Cushion, Mica Disc Set, Inner Cushion and Gasket.
4. Thoroughly clean interior window port surfaces of Cover and Gage; avoid scratching Cushion and Gasket sealing surfaces.
5. Clean Cover Bolts (P/N 1-555-12-011).
6. Apply a generous film of Lubricant (included in Repair Kit) to the bottom half of each Bolt; set Bolts aside for later use.
7. Into Cover bore install Outer Cushion and Glass. Into Gage bore install Gasket, Inner Cushion and Mica Disc Set. Note: Remove protective tissues from Mica Disc Set before installing and install ALL Mica Discs included in Repair Kit.
8. While maintaining Cushion and Glass position, carefully install Cover into Gage bore and against Mica Disc Set.
9. Verify that all installed window port components are properly aligned by visual inspection through the Cover opening.
10. Install the 4 pre-lubricated Cover Bolts; make-up Bolts finger-tight to hold cover in position.
11. In a cross-pattern, tighten Bolts in increments of 5 ft.-lbs. (6.7 N-m) to a final applied torque of 25 ft.-lbs. (33.6 N-m).
12. Close drain valve and slightly open isolation valves.
13. Allow approximately 10 minutes (or as required) for Gage to reach operating temperature.
14. Close isolation valves and drain liquid from Gage.
15. Before Gage can cool, re-tighten Bolts in a cross-pattern to 25 ft.-lbs. (33.6 N-m).
16. Gage window port assembly is completed and prepared for service.

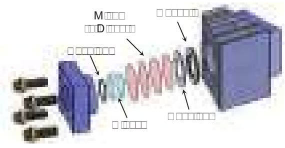

Replacement Parts

Part Number	Description
[illegible]	[illegible]
[illegible]	[illegible]
[illegible]	[illegible]
[illegible]	[illegible]

[illegible]

PRINCIPLE OF OPERATION

The STB-3000A Steam Gage Chamber has a central passageway through which steam and water can rise and fall. On opposing sides of the Chamber are flange-retained Glass Ports that are set at precise angles to cause refraction of the light emitted from the Red and Green LEDs inside of the Illuminator. The emitted light passes through the Illuminator-side Ports of the Gage, through the fluid in the Gage Chamber and exits through the Viewing Hood-side Ports of the Gage. The emitted light is visible through the Slots in the Viewing Hood from vantage point shown in Figure 1. The STBI-3000A Illuminator & Viewing Hood Assembly is designed such that through refraction, fluid in the steam phase will allow passage of only the light in the Red spectrum and, when in the water phase, will allow passage of only the light in the Green spectrum. Figure 2 shows this principle of refracted light through the Gage Chamber and the indication of fluid phase level.

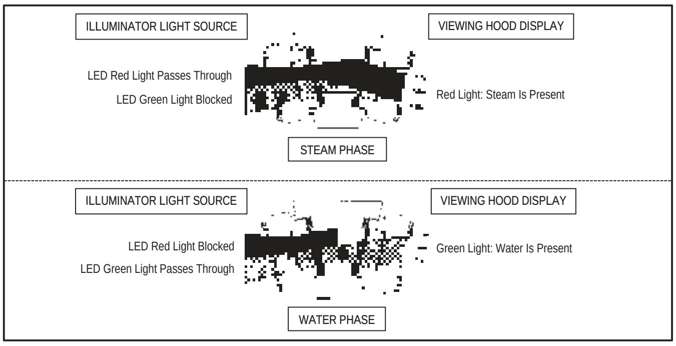

Figure 2. Diagram of Illuminator Light Refraction through Gage Chamber and Indicated Level Position of Fluid Phase

PRODUCT VARIATIONS AND OPERATIONAL LIMITS

Available Lengths - The STB-3000A Steam Gage and Companion STBI-3000A Bi-color Illuminator & Viewing Hood Assembly is available in 27 standard lengths ranging from 4-Port to 30-Port. The external Housings of the Illuminator & Viewing Hood are continuous lengths whereas beyond 5-Port lengths, one or more of the Internal Components are stacked or coupled together. The LED Circuit Boards are electrically interconnected by means of Jumper Cables from one Circuit Board to the adjacent Circuit Board for Illuminators having multiple LED Circuit Boards.

Power Source – The Illuminator is equipped with an integrally-mounted Power Supply Unit that accepts an AC voltage electrical input that transforms it to a 12 VDC electrical output that is pre-wired to the Illuminator LED Circuit Board(s). Power consumption is 0.025 Amps per Gage/Illuminator Port. Two Power Supply Enclosure Units are available:
Standard – NEMA 4X (Weatherproof and corrosion resistant), 84-264 VAC Input, 50/60 Hz
Optional – Hazardous Locations (Intrinsically safe and explosion-proof, Cl. I, Div. 1, Groups B, C & D), 115-230 VAC Input, 50/60 Hz

WARNING: Always abide to the design ratings of the Power Supply Unit as failure to do so can result in Unit failure or the development of excessive heat and the potential ignition of volatile liquids or gasses in the surrounding environment causing property damage, personal injury or death. The Power Supply Unit contains no user-serviceable internal parts.

LED Circuit Boards – The Illuminator LED Circuit Board(s) utilize brilliant 4-cluster Red and Green LED Lamps for each Gage/Illuminator Port. The LED Lamps have a lifespan in excess of 100,000 hours; about 200 times greater than that of conventional incandescent bulbs. Applied to the LED Circuit Boards is an acrylic conformal coating to provide resistance to environmental corrosion.

Heat Protection – Steam at high pressure generates considerable heat within the Gage Chamber. Albeit at a reduced temperature, the heat is transferred to the Internal Components of the Illuminator and if not sufficiently dissipated, can reduce the lifespan of the LED Circuit Boards. UNDER NO CIRCUMSTANCES should the Illuminator or Viewing Hood be insulated or the Vent Openings in the Housing Panels and Top Vent Plates be otherwise obstructed. The LED Circuit Boards have a maximum continuous service temperature of -40 to 185º F. (-40 to 85º C.). Should a condition arise where sufficient heat dissipation cannot be achieved by normal (convection) air cooling, an optional Vortex Tube can be readily adapted to the Illuminator Housing to reduce the internal air temperature by as much as 50º F. (46º C.) using compressed "shop" air.

Handling & Storage – The Illuminator & Viewing Hood Assembly contain fragile Glass Panes and Bracket-mounted Circuit Boards whose LED Lamps have been factory aligned to achieve maximum light refraction and brightness when viewed. HANDLE WITH CARE to prevent damage to and misalignment of the Internal Components. Provide protection from moisture and atmospheric dust if storing the Illuminator & Viewing Hood Assembly for a prolonged time period prior to installation.

UNCRATING AND INSPECTION

The STBI-3000A Illuminator & Viewing Hood are normally packaged separately and independently of the STB-3000A Steam Gage with which it is typically shipped; CAREFULLY remove crating and packaging material. Perform the following checks after unpacking:

Shipment Damage – Check the Exterior of the Assemblies for damage. There should be no evidence (audible rattling) of loose or broken Internal Components during handling. If damage is evident or suspected, notify the freight carrier immediately and request a damage inspection. Refer to the *DISASSEMBLY/PARTS REPLACEMENT/REASSEMBLY* Section of this Manual should it be necessary to partially or fully disassemble the Illuminator or Viewing Hood to inspect the Internal Components.

Purchasing Documentation & Product Markings – Verify to ensure that the Nameplate Markings on the STBI-3000A Illuminator & Viewing Hood Assembly and the STB-3000A Steam Gage (if shipped together) match those on the purchase order. Contact QTS Factory Service should a discrepancy be found.

Operating Conditions – Review all documents including the *PRODUCT VARIATIONS AND OPERATIONAL LIMITS* Section of this Manual for information that is descriptive of the operating conditions for which the Illuminator & Viewing Hood Assembly and the Steam Gage (if shipped together) were specified and subsequently configured. Compare the operating conditions stated in the documents to the ACTUAL field installation operating conditions. Should a discrepancy be discovered, DO NOT install the equipment until the issue has been investigated and resolved.

> WARNING: It is the user's responsibility to ensure that the Illuminator & Viewing Hood Assembly (and the Steam Gage) are configured for and compatible with the actual field operating conditions. Consult the STB-3000A Steam Gage Installation, Operating and Maintenance Manual for information pertinent to the Steam Gage design operating limits. If unsure, have the Product Markings available and contact QTS Factory Service for assistance in determining product suitability for the operating conditions.

INSTALLATION

The installation of the of the STBI-3000A Illuminator & Viewing Hood Assembly as well as the STB-3000A Steam Gage shall only be performed by personnel whom are knowledgeable and safely capable of the procedure and have been qualified as such by the equipment user or their authorized representative.

> CAUTION: Illuminator installation requires the completion of electrical connections. It is the user's responsibility to ensure that electrical installation is performed by a Qualified Electrician and complies with the applicable industrial electrical Codes (USA: Refer to National Electrical Code NFPA current edition; Canada: Refer to Canadian Electrical Code CSA C22) having jurisdictional authority for the installation type and location as applicable.

STB-3000A Steam Gage Installation – Refer to the Installation, Operating and Maintenance Manual for the Steam Gage and install the Gage in its operating position SEPERATELY AND PRIOR TO attaching the Illuminator & Viewing Hood Assembly.

STBI-3000A Illuminator & Viewing Hood Installation – NOTE: Unless otherwise indicated, Component Names and Item Numbers in these instructions are in reference to Figure 5 Parts List located in this Manual.

> IMPORTANT: The configuration (type, size, length and position) of the STB-3000A Steam Gage vessel and drain connections were manufactured according to the Purchaser's specifications. When installed, the Gage configuration establishes the mounting locations of the Illuminator and the Viewing Hood relative to other equipment and structures that may be present in the installation area. The Illuminator and Viewing Hood have ONE CORRECT ATTACHMENT POSITION ON THE STEAM GAGE; they are NOT reversible nor invertible. Figure 1 depicts the attachment locations relative to the Gage Chamber cross-sectional shape and Port locations.

1.□ Attach Illuminator – Align the Horizontal Leg of the J-Slots in the Illuminator Side Panels (Items 7) with the Shoulder Screw Attachment Pins (Items 31) of the Gage Chamber; there are four (4) attachment points on each side of the Gage Chamber. Engage the J-Slots with the Pins, slide the Illuminator inward toward the Gage and allow the Illuminator to drop down slightly to engage the vertical "Hook" portion of the J-Slots. The Illuminator-to-Gage Attachment Points are shown in Figure 1.
2.□ Attach Viewing Hood – Swing the Levers of the Latches (Items 23) outward on both Viewing Hood Side Panels (Items 7) to unlock and allow free movement of the Latch Bales. Swing the Bales outward to prevent interference with the Illuminator Strikes (Item 24) when attaching the Viewing Hood. Attach the Viewing Hood the Gage Chamber as described for the Illuminator (above); refer to Figure 1.
3.□ Fasten Latches – Swing the Latches forward and engage the Latch Bales with the Strike Loops. Swing the Latch Levers away from the Bales and toward the Side Panels; press inward and lock the Latches in position.
4.□ Electrical Connection to Power Supply Unit

> CAUTION: DO NOT connect electrical power until, 1) the Illuminator has been attached and fastened to the Steam Gage Chamber according to the instructions above and, 2) has been externally grounded. It is the user's responsibility to ensure that only Qualified Electricians versed in the applicable industrial electrical Codes route, secure and make connection of electrical conductors and install protective encasements. The specification of conductor type, material, size and the need for armoring, strain-relief and enclosure protection thereof is beyond the scope of this manual.

A.□ Referring to Figure 3, there are three (3) power input Conductor Wire Leads extending from the Bottom Cap of the Power Supply Unit Enclosure. Depending on the specific Illuminator, a Junction Box may have been installed into the Bottom Cap, which in such case, the Conductor Wire Leads are accessible by removing the Junction Box Cover. The Junction Box may contain a Terminal Block to which the Conductor Wire Leads are connected depending on the Illuminator specifications. Whether exposed (as shown) or inside a Junction Box, the Conductor Wire Leads from the Power Supply Unit are color coded as noted below.

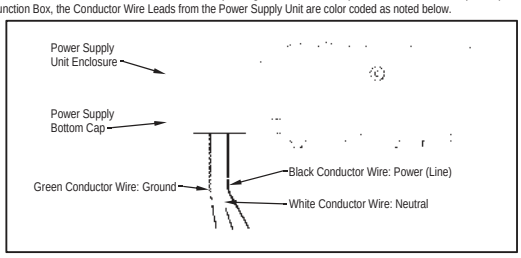

Figure 3. Power Supply Unit Input Conductor Wire Leads Identification

B.□ Connect the electrical input power source to the Power Supply Unit Wire Leads in accordance with industrial electrical Code requirements. The input power must be within the limits stated in the *PRODUCT VARIATIONS AND OPERATIONAL LIMITS – Power Source* Section of this Manual. If installing additional electrical hardware such as a junction box, conduit or sealed fittings, be certain that the hardware selected for use does not compromise the Enclosure Rating of the Power Supply Unit. Two Power Supply Units are available for the Illuminator; the Unit installed can be determined as follows:

Standard Unit: NEMA 4X (Weatherproof and corrosion resistant) has only a Product Nameplate attached to its exterior
Optional Unit: Hazardous Locations (Intrinsically safe and explosion-proof, Class I, Div. 1, Groups B, C & D) has a Product Nameplate and an Electrical Certification Nameplate attached to its exterior

PREVENTATIVE MAINTENANCE

When used within the Design Operational Limits, the STBI-3000A Illuminator & Viewing Hood Assembly will provide a long service life requiring little preventative maintenance other than periodically checking that the exterior fasteners are tight after many heating and cooling cycles, the Vent Openings in the Top Vent Plates (Items 3) and the Side Panels (Items 7) remain unobstructed and the Viewing Lens Glass (Item 17) in the Slotted Openings of the Viewing Hood (Item 2) are clean. Should the Illuminator & Viewing Hood Assembly be installed in an exceptionally dirty or dusty environment, periodic cleaning of the Viewing Lens Glass Pane(s) inside the Viewing Hood and the Thermal Barrier Glass Pane(s) (Item(s) 16) inside the Illuminator Housing (Item 1) may be required. See the *DISASSEMBLY/PARTS REPLACEMENT/REASSEMBLY* Section of this Manual for Glass Panes removal procedure. Any additional preventative maintenance must be determined by the user based on the operating conditions and installation environment.

DISASSEMBLY/PARTS REPLACEMENT/REASSEMBLY

Assuming that none of the Internal Components of the Illuminator or Viewing Hood have become damaged due to mishandling or exposure to excessive heat, the only Components having a finite service life that may eventually require replacement are the LED Circuit Boards inside the Illuminator.

The externally mounted Power Supply Unit is designed to deliver a long service life and has built-in "hiccup" circuit such that if a short circuit occurs, the Power Supply Unit will shut-down then, once the fault has been corrected, restore itself to operation. Should the Power Supply Unit ever require replacement, it must be replaced as an entire Unit as it contains no user serviceable parts. Contact QTS Factory Service for refurbishment of field-returned Power Supply Units.

> WARNINGS:
> 1. The STB-3000A Steam Gage to which the Illuminator & Viewing Hood Assembly is attached is designed to contain steam at high pressure and temperature. NEVER attempt removal or servicing of any of the level indication equipment (Power Supply Unit, Illuminator, Viewing Hood or the Steam Gage itself) without first shutting down (or isolating the Gage from) the process, venting/draining the process fluid from the Gage and allowing sufficient time for the equipment to cool to ambient temperature.
> 2. NEVER attempt removal of the Power Supply Unit or removal/disassembly of the Illuminator until the input power source to the Power Supply Unit has been shut-off and locked-out such to prevent inadvertent electrical energizing.
> 3. If the Illuminator is being cooled with an optional Vortex Tube threaded into the Lower End Cap (Item 5B), shut-off/disconnect the compressed air source to the Vortex Tube prior to servicing the Illuminator.
> 4. The Internal Components of the Illuminator & Viewing Hood are retained and weight-supported by the Lower End Caps (Item 5A or 5B – Illuminator, Item 5A – Viewing Hood) fastened to the Bottom End of the Housings (Item 1 – Illuminator, Item 2 – Viewing Hood) by four (4) Cap Screws (Items 8). ALWAYS remove the Illuminator & Viewing Hood Assembly from the Steam Gage AND POSITION THEM HORIZONTALLY before removing the Cap Screws from the Lower End Caps.
> FAILURE TO ABIDE TO THESE WARNINGS CAN RESULT IN PROPERTY DAMAGE, SERIOUS PERSONAL INJURY OR DEATH.

> IMPORTANT DISASSEMBLY/REASSEMBLY NOTES:
> 1. QTS OEM component parts are engineered specifically for the operating parameters of the STBI-3000A Illuminator & Viewing Hood and are not interchangeable with products of other manufacturers. Always use QTS replacement parts to ensure proper fit, operational function and factory-backed warranty coverage.
> 2. All threaded fasteners and connections of the STBI-3000A Illuminator & Viewing Hood Assembly (including the Power Supply Unit) are right-handed; turn clockwise to tighten, counter-clockwise to loosen.
> 3. Some fasteners will require the application of lubricant to their screw threads prior to reuse; this requirement is so noted in the applicable instruction. Generally, any thread lubricant having an ignition temperature above the actual operating temperature of the Illuminator & Viewing Hood Assembly is acceptable.
> 4. Instructions are provided for the complete disassembly/reassembly of the Illuminator & Viewing Hood Assembly, however, it is recommended that before beginning an inspection or repair, the pertinent instructions are read and reviewed in their entirety to avoid the removal of Components that are un-necessary to accomplish the desired inspection or repair.

Illuminator Components Disassembly – All of the Internal Illuminator Components are readily accessible and removed from the Bottom End of the Illuminator Housing (Item 1).

1.□ Unthread and remove the four (4) Cap Screws (Items 8) retaining the Lower End Cap (Item 5A or 5B) from the Bottom End of the Illuminator Housing (Item 1). Remove the Lower End Cap.
2.□ Remove the Thermal Barrier Glass Pane(s) (Item(s) 16) by GENTLY sliding them outward from the Illuminator Housing. Illuminators longer than 10-Port will contain multiple Glass Panes; slightly elevate the Top End of the Illuminator Housing to slide out the remaining Glass panes. Store the Glass Pane(s) such to protect them against inadvertent damage while removed from the Illuminator.
3.□ Remove the LED Circuit Board(s) (Item(s) 18) by GENTLY pulling the LED Board End Mounting Bracket (Item 12) straight outward from the Illuminator Housing JUST FAR ENOUGH to expose the Electrical Cable (Item 9) that is connected to the LED Circuit Board Terminal. Press the Locking Tab of the Electrical Cable End Connector inward while pulling the Cable Connector from the LED Circuit Board Terminal to disconnect.
4.□ GENTLY pull the LED Board End Mounting Bracket straight out and remove the LED Circuit Board(s)/Mounting Brackets Assembly from the Illuminator Housing. Illuminators longer than 5-Port will contain multiple LED Circuit Boards that are mechanically connected by Coupler Mounting Bracket(s) (Item(s) 19) and electrically connected by Jumper Cable(s) (Item(s) 20). PROVIDE ADEQUATE SUPPORT when removing the LED Circuit Board "String" from exceptionally long Illuminators to prevent Components damage.
5.□ Disassemble the LED Circuit Board(s) from the End Mounting Brackets (Items 12). Applicable only to Illuminators with multiple LED Boards, disconnect the Electrical Jumper Cables (Item(s) 20) from the LED Board Terminals as described in Step 3 above. Unthread and remove the Machine Screws (Items 22) and Lock Washers (Items 21) from the Mounting Brackets to detachment of the LED Boards.

6.□ With the LED Circuit Board(s)/Brackets Assembly removed, the condition of the Primary Electrical Cable (Item 9) can be examined. If the removal of the Electrical Cable is necessary, it first requires its disconnection from the Power Supply Unit; see the *POWER SUPPLY AND FITTINGS REMOVAL/ATTACHMENT* Section in this Manual for Primary Electrical Cable removal instructions.
7.□ Although usually un-necessary, removal of the NEMA 4X Enclosure Power Supply Unit Electrical Fittings (Items 10, 11, 15A1 & 15A2) or the Hazardous Locations (EX-P/IS) Power Supply Unit Cover and Cable Guard Fitting (Items 15B3 & 15B1) from the Illuminator Housing first requires the disconnection of the Primary Electrical Cable from the Power Supply Unit; see the *POWER SUPPLY AND FITTINGS REMOVAL/ATTACHEMENT* Section in this Manual for Electrical Fittings and Cover removal instructions.
8.□ If required, remove the Upper End Cap (Item 4) and the Vent Plate (Item 3) from the Illuminator Housing (Item 1) by unthreading and removing the four (4) Cap Screws (Items 8) from the Upper End Cap; lift off the Upper End Cap and Vent Plate. NOTE: Beneath the Vent Plate are pieces of compressible Cushioning Cord (Items 29 & 30) that serve to remove all excess internal space between the LED Circuit Board(s), Thermal Barrier Glass Pane(s) and the Vent Plate resulting from unavoidable manufacturing tolerances. The Cushions are to prevent movement and greatly reduce the potential for damage to the Internal Components when handling the Illuminator Assembly; DO NOT LOSE THE CUSHIONS.
9.□ Remove the Side Panels (Items 7) having the permanently attached Latch Strikes (Items 24) from the Illuminator Housing by unthreading the Hex Nuts (Items 28) and removing the Lock Washers (Items 27). Lift off the Side Panels from the Cap Screws (Items 26) projecting from the Illuminator Housing. NOTE: The Hex Nuts use a special prevailing torque screw thread to reduce their susceptibility to loosening when subjected to thermal cycling; AVOID LOSING THE HEX NUTS although they are replaceable with a standard (non-locking) hex nuts of the same thread size. Remove the Cap Screws by sliding them along the length and out from the End of the Internal Channel of the Illuminator Housing.

Inspection/Cleaning/Replacement of Illuminator Components – Perform the following inspections of the Components; clean or replace Components as necessary according to the instructions. Should replacement parts be needed, they can be identified and ordered by part number from Figure 5 Parts List in this Manual.

1.□ Thermal Barrier Glass Pane(s) – Inspect the Thermal Barrier Glass Pane(s) (Item(s) 16) for damage; if damage is evident or fractures are observed replace the Pane(s). If the Pane(s) are intact, clean them using common non-abrasive household glass cleaning solution and a cloth or paper towels. Take care not to saturate the Protective Tape affixed to the perimeter of the Pane(s) with the glass cleaning solution. Should the Protective Tape be missing, damaged or no longer adhering to Glass Edges, it can be replaced with a SINGLE LAYER of THIN masking-type tape suitable for a continuous exposure temperature of 185º F. (85º C.).
2.□ LED Circuit Board(s) – An LED Circuit Board (Item(s) 18) that has failed obviously requires replacement. Closely inspect all of the LED Boards for signs of excessive heat exposure, cracks near or across the Electrical Path Tracings and cracked or broken LED Lamps and Cable Terminals. Relative to the normal working position of the Illuminator, the LED Board(s) nearest to the Top of the Illuminator Housing (Item 1) are the most susceptible to damage/failure due to overheating as the internal temperature is the highest in this location. If chronic failure of the LED Circuit Boards due to overheating is experienced, contact QTS Factory Service for possible solutions.
3.□ Electrical Cables - Inspect the Primary Electrical Cable (Item 9) and (if applicable) the Jumper Cable(s) (Item(s) 20) for signs of overheating, cracked or missing Wire Insulation and damaged End Connectors; replace if damaged. If reusing, clean the Electrical Cables with a damp cloth; use clean, dry compressed air to blow out dust from the Cable End Connectors.
4.□ Mounting Brackets – Inspect the Mounting Brackets (Items 12 &, as applicable, Item(s) 19); they must be flat (not bent) with the pressed-in Threaded Nuts tight and the screw threads undamaged. Replace if necessary; clean if being reused.
5.□ Illuminator Housing, Side Panels, Vent Plate & End Caps – To maximize heat dissipation, use a cloth and a benign cleaning solution to remove a heavy accumulation of dirt, grime, oil, etc., from the Illuminator Housing (Item 1), Side Panels (Items 7), Vent Plate (Item 3) and Upper and Lower End Caps (Items 4 & 5A or 5B). Use clean, dry compressed air to blow out dust/debris from all Vent Openings.

Illuminator Components Reassembly – The following instructions assume that the entire Illuminator is to be reassembled; skip over the instructions that are not pertinent to the inspection or repair being completed.

1.□ Attach Side Panels to Illuminator Housing - Align Hex Flats of the Cap Screws (Items 26) with the Internal Channel Slot in the End of the Illuminator Housing (Item 1) and slide-in the quantity of screws corresponding to the quantity of Bolt Holes in the Side Panel (Item 7). Orient the first Side Panel being attached as shown in Figure 1, place it against the Side of the Illuminator Housing next to where the Cap Screws are projecting from the Housing and align the Bottom Edge of the Side Panel with the Bottom Edge of the Illuminator Housing. Reposition the Cap Screws to line-up with the Panel Bolt Holes. Engage the Panel Bolt Holes with the Cap Screws then install Lock Washers (Items 27) onto the Cap Screws. Thread Hex Nuts (Items 28) onto the Cap Screws. While maintaining alignment of the Bottom Edges of the Side Panel and the Housing, tighten the Hex Nuts hand-tight. DO NOT exceed 30 in-lbs. applied torque. Repeat this process for the attaching the remaining Side Panel to the Opposite Side of the Illuminator Housing.

2.□ Install Electrical Cable Fittings/Power Supply Unit Cover – The assembly procedure differs depending on which Power Supply Unit will be attached to the Illuminator; follow the instructions pertinent to Unit being used.

A.□ Standard NEMA 4X Weatherproof and Corrosion Resistant Enclosure:
Place Flat Washer (Item 11) onto the Threaded End of the Tube Adapter Fitting (Item 15A1) and set aside. Align the Hex Flats of Pipe Nut (Item 10) with the Internal T-Slot Channel of the Illuminator Housing (Item 1) then slide the Nut inward along the Channel until aligned with the Side Hole in the Illuminator Housing. While holding the Pipe Nut in position, insert the Tube Adapter with Flat Washer thru the Side Hole of the Illuminator Housing from the exterior and thread it into the Hex Pipe Nut. Tighten the Tube Adapter hand-tight. DO NOT yet install Item 15A2 Union Elbow.

B.□ Optional Hazardous Locations (Cl. I, Div. 1, Gr. B, C & D) Enclosure:
Fully retract but do not completely unthread the Set Screw (Item 15B2) that is threaded into the Power Supply Unit Cover (Item 15B3). Orient the Cover such that the Open End is facing toward the Bottom End of the Illuminator Housing (Item 1), engage the Cover Side Rails with Channels in the Side of the Illuminator Housing then slide the Cover along the Illuminator Housing until the Cover is positioned past the Housing Side Hole. Temporarily tighten the Cover Set Screw to hold Cover in this position. Place Flat Washer (Item 11) onto the Threaded End of the Cable Guard Fitting (Item 15B1) and set aside. Align the Hex Flats of Pipe Nut (Item 10) with the Internal T-Slot Channel of the Illuminator Housing (Item 1) then slide the Nut inward along the Channel until aligned with the Side Hole in the Illuminator Housing. While holding the Pipe Nut in position, insert the Cable Guard Fitting with Flat Washer thru the Side Hole of the Illuminator Housing from the exterior and thread it into the Hex Pipe Nut. Tighten the Cable Guard Fitting hand-tight. Loosen the Cover Set Screw, slide the Cover against the Cable Guard Fitting and retighten the Set Screw snug.

3.□ Assemble LED Circuit Board(s) to Mounting Brackets – An Illuminator longer than 5-Port will contain multiple LED Circuit Boards and use Coupler Mounting Bracket(s); follow the instructions pertinent to the quantity of LED Circuit Boards contained in the Illuminator.

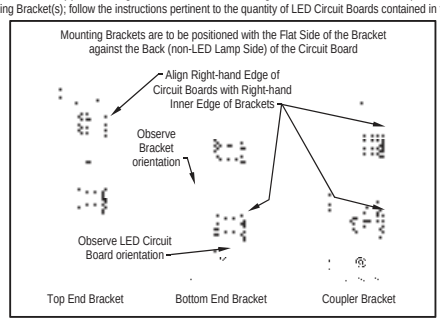

Figure 4. Orientation of LED Circuit Boards and Mounting Brackets Prior to Assembly

IMPORTANT: IT IS CRITICAL TO THE PROPER REFRACTION OF THE LIGHT EMITTED BY THE ILLUMINATOR THAT THE LED CIRCUIT BOARD(S) AND MOUNTING BRACKETS ARE ASSEMBLED TOGETHER EXACTLY AS SHOWN IN FIGURE 4 ABOVE.

A.□ Illuminator with a Single LED Circuit Board:
Place the LED Circuit Board (Item 18) on a flat horizontal surface and orient the Board with LED Lamps facing outward and the Printed Arrows on the Board pointing upward. Beneath the Bottom End of the LED Board, position the Bottom End Mounting Bracket (Item 12) with Engraved Arrow pointing upward and the Flat Side of the Mounting Bracket against the Back (Non-Lamp) Side of the LED Board. Align the Upper Threaded Hole of the Mounting Bracket with Slot in the LED Board as shown in Figure 4. Place Lock Washer (Item 21) on Machine Screw (Item 22), install thru the LED Board Slot and thread into the Upper Threaded Hole in the Mounting Bracket; do not yet fully tighten. Repeat this process for the Top End of the LED Circuit Board and the Top End Mounting Bracket. NOTE: The Top and Bottom Mounting Brackets (Items 12) are identical however the Top End of the LED Board is fastened to the Lower Threaded Hole of the Top End Mounting Bracket as shown in Figure 4. With both Brackets attached, align the Right-hand Edge of the LED Board with the Inner Right-hand Edges of the Mounting Brackets and fully tighten the Machine Screws.

B.□ Illuminator with multiple LED Circuit Boards:

1.□ Place the LED Circuit Boards (Items 18) on a flat horizontal surface. Position the LED Boards in a "String" in the order in which they are to be attached to each other. NOTE: When connecting LED Boards having unequal overall lengths, their relative positioning has no effect on the Illuminator function. However, it is recommended that the Longer LED Boards be positioned at the Bottom of the Board String such that when installed, they will be nearest to the Bottom of the Assembled Illuminator. Orient the Boards with LED Lamps facing outward and the Printed Arrows on the Boards pointing upward. Beneath the Bottom End of the Lowest LED Board in the String, position the Bottom End Mounting Bracket (Item 12) with Engraved Arrow pointing upward and the Flat Side of the Mounting Bracket against the Back (Non-Lamp) Side of the LED Board. Align the Upper Threaded Hole of the Mounting Bracket with Slot in the LED Board as shown in Figure 4. Place Lock Washer (Item 21) on Machine Screw (Item 22), install thru the LED Board Slot and thread into the Upper Threaded Hole in the Bottom Mounting Bracket; do not yet fully tighten. Repeat this process for the Top End of the Uppermost LED Board in the String and the Top End Mounting Bracket. NOTE: The Top and Bottom Mounting Brackets are identical however the Uppermost LED Board is fastened to the Lower Threaded Hole of the Top End Mounting Bracket as shown in Figure 4.

2.□ Space the String of the LED Circuit Boards apart such that that Endmost Slots in the un-bracketed Ends of the LED Boards are approximately the same distance apart as the Threaded Holes spacing in the Coupler Mounting Bracket (Item 19). Position the Coupler Bracket beneath the Ends of the LED Boards with the Flat Side of the Bracket against the Backside of the Boards as previously done for the End Mounting Brackets. NOTE: The Ends of the Coupler Mounting Bracket are symmetric; there is no "orientation" other than the Flat Side of the Bracket must be beneath and against the LED Boards. Align the LED Board Slots with the Threaded Holes in the Coupler Bracket. Place Lock Washer (Item 21) on Machine Screw (Item 22) and install thru the LED Board Slot and thread into the Threaded Hole of the Coupler Mounting Bracket. Do not yet fully tighten. Repeat the fastening process for the opposite End of the LED Board and Coupler Bracket as well as the remaining LED Board/Coupler Bracket Junctions. With all Brackets attached, align the Right-hand Edges of all of the LED Circuit Boards with the Inner Right-hand Edges of the Ends and Coupler Mounting Brackets and fully tighten the Machine Screws.

4.□ Connect/Install Electrical Cables – The End Connectors of the Electrical Cables are directional and have ONE correct orientation to fully engage and lock into the LED Circuit Board Terminals. If the End Connector does not initially fully engage and lock with the LED Board Terminal, rotate it 90º and retry. Only an Illuminator with multiple LED Circuit Boards will use Electrical Jumper Cables.

A.□ Connect Electrical Jumper Cable(s): At the junction where the LED Circuit Boards (Items 18) are connected together with a Coupler Mounting Bracket (Item 19), connect the Jumper Cable (Item 20) to the Terminals of the LED Board to electrically connect adjacent Boards. Repeat this process for the remaining LED Board coupled junctions.

B.□ Install Electrical Primary Cable: From the exterior of the Illuminator Housing (Item 1), insert the SMALL FEMALE CONNECTOR END of the Primary Electrical Cable (Item 9) thru the previously installed Tube Adapter Fitting (Item15A1). Gently pull the Cable through the Tube Adapter and into the Interior of the Illuminator Housing until about 3" of Cable (including the length of the Male End Connector) remains exposed from the End of the Tube Adapter. Where the Cable enters the Interior of the Illuminator Housing (just beyond the Hex Pipe Nut (10)), make a small bend in the Cable then route the Cable along the Inside of the Illuminator Housing Wall Channel and to the Bottom End and out of the Illuminator Housing.

5.□ Install the LED Circuit Board(s)/Mounting Brackets Assembly – Exercise CARE to ensure that BOTH edges of EACH Mounting Bracket is aligned and engaged with the Retaining Slots of the Illuminator Housing when inserting the LED Board/Brackets Assembly.

A.□ Orient the LED Circuit Board(s)/Mounting Brackets Assembly (Item(s) 18, 12 &, as applicable Item(s) 19) such that the Printed Arrows are pointing upward toward the Top of the Illuminator Assembly when installed and the Terminals of the LED Board(s) are facing the previously installed Primary Electrical Cable (Item 9). GENTLY insert the LED Board/Brackets Assembly into the Narrow Slots of the Illuminator Housing (Item 1) that are located CLOSEST to the Primary Electrical Cable; Use CAUTION to avoid tangling Jumper Cables (Item(s) 20 if present) with the Primary Cable. Leave about 3" of the LED Board/Brackets Assembly exposed from the End of the Illuminator Housing such that the Lowermost Electrical Connection Terminal is accessible.

B.□ Connect the exposed End of the Primary Electrical Cable to the LED Circuit Board Terminal. GENTLY push the LED Board/Brackets Assembly the remaining distance into the Illuminator Housing. Tuck excess Primary Cable inward into the Illuminator Housing and away from the Backside of the LED Board and the Lower Edge of the Bottom Mounting Bracket (Item 12). When correctly installed, the Lower Edge of the Bottom Mounting Bracket will be near flush with the End of the Illuminator Housing.

6.□ Install Thermal Barrier Glass Pane(s) Having Tape-Protected Edges – An Illuminator longer than 10-Port with contain multiple Thermal Barrier Glass Panes. NOTE: When installing Thermal Barrier Glass Panes having unequal lengths, their relative positioning has no effect on the Illuminator function. However, it is recommended that the Longer Glass Panes are installed such that they are positioned nearest to the Bottom of the Assembled Illuminator. GENTLY insert the Thermal Barrier Glass Panes (Item(s) 16) into the Wide Slots of the Illuminator Housing (Item1). When correctly installed, the Lower Edge of the Lowermost Glass Pane will be near flush with the End of the Illuminator Housing.

7.□ Fasten Lower End Cap to Illuminator Housing – Apply lubricant to the four (4) Cap Screws (Items 8) according to *DISASSEMBLY/ PARTS REPLACEMENT/REASSEMBLY – Important Disassembly/Reassembly Notes* Section in this Manual; set Cap Screws aside for later use.

A.□ The Diagonal Edge of the Lower End Cap (Item 5A or 5B) MUST be oriented the direction shown in the Top View of Figure 1 (the Upper End Cap (Item 4), Vent Plate (Item 3) and the Lower End Cap are all positioned with their Diagonal Edge oriented in the same direction). When correctly oriented, the Longer Side of the Lower End Cap will be positioned on the "Front Side" of the Illuminator Housing (Item 1) relative to the previously installed Electrical Fitting (Items 15A1) or, as applicable, the Power Supply Unit Cover (Item 15B3) being on the "Left Side" of the Housing; refer to Figure 1.

B.□ Align the Bolt Holes of the Lower End Cap with those in the End of the Illuminator Housing and engage the Lower End Cap Panel Guide Slots with the Bottom Edges of the Side Panels (Items 7); VERIFY that the Primary Electrical Cable (Item 9) will not be pinched by the Lower End Cap when attached. Install the for (4) previously lubricated Cap Screws (Items 8) thru the Lower End Cap Bolt Holes and thread into the Illuminator Housing. Tighten the Cap Screws hand-tight.

8.□ Install Cushion Cords, Vent Plate and Upper End Cap – It is highly recommended that the Illuminator Sub-assembly to be oriented upright in its normal operating position when installing these Components. Apply lubricant to the four (4) Cap Screws (Items 8) according to *DISASSEMBLY/PARTS REPLACEMENT/REASSEMBLY – Important Disassembly/Reassembly Notes* Section in this Manual; set Cap Screws aside for later use.

A.□ Apply finger-pressure to the Top End of the LED Circuit Board(s)/Brackets Assembly (Items 18 & 12) and also to the Thermal Barrier Glass Pane(s) (Item(s) 16) to ensure that they are firmly resting against the Inside Surface of the Lower End Cap (Item 5A or 5B).

B.□ Insert the Cushioning Cord Strips (Items 29 & 30) into the Slots of the Illuminator Housing (Item 1) and against, 1) the Top Edge of the LED Board Top Mounting Bracket and, 2) the Top Edge of the Glass Pane. Extremely long Illuminators may have more than one Cushioning Strip to be inserted into each Slot. When correctly installed, the Cushioning Strips will project slightly above flush with the Top End of the Illuminator Housing; the objective is to apply a slight compression to the Cushioning Strips when attaching the Upper End Cap (Item 4) to prevent movement and potential damage to the Internal Components when handling the Illuminator Assembly.

C.□ The Diagonal Edges of the Vent Plate (Item 3) and Upper End Cap (Item 4) MUST be oriented the direction shown in the Top View of Figure 1. When correctly oriented, the Longer Side of both Parts will be positioned on the "Front Side" of the Illuminator Housing relative to the previously installed Electrical Fitting (Items 15A1) or, as applicable, the Power Supply Unit Cover (Item 15B3) being on the "Left Side" of the Housing; refer to Figure 1.

D.□ Align the Bolt Holes of the Vent Plate with those in the End of the Illuminator Housing and engage the Panel Guide Slots of the Vent Plate with the Top Edges of the Side Panels (Items 7). Place the Upper End Cap on top of the Vent Plate and align the Bolt Holes. Install the four (4) previously lubricated Cap Screws (Items 8) thru the Bolt Holes of the Upper End Cap and Vent Plate and thread into the Illuminator Housing. Tighten the Cap Screws hand-tight.

Viewing Hood Components Disassembly – All of the Internal Viewing Hood Components are readily accessible and removed from the Bottom End of the Viewing Hood Housing (Item 2).

1.□ Unthread and remove the four (4) Cap Screws (Items 8) retaining the Lower End Cap (Item 5A) from the Bottom End of the Viewing Hood Housing (Item 2). Remove the Lower End Cap.

2.□ Remove the Viewing Lens Glass Pane(s) (Item(s) 17) by GENTLY sliding them outward from the Viewing Hood Housing. Viewing Hoods longer than 10-Port will contain multiple Glass Panes; slightly elevate the Top End of the Viewing Hood Housing to slide out the remaining Glass Panes. Store the Glass Pane(s) such to protect them against inadvertent damage while removed from the Viewing Hood.

3.□ Remove the Viewing Alignment Sight (Item 6) by GENTLY pulling the Alignment Sight straight outward from the Viewing Hood.

4.□ If required, remove the Upper End Cap (Item 4) and the Vent Plate (Item 3) from the Viewing Hood Housing by unthreading and removing the four (4) Cap Screws (Items 8) from the Upper End Cap; lift off the Upper End Cap and Vent Plate. NOTE: Beneath the Vent Plate are pieces of compressible Cushioning Cord (Items 29 & 30) that serve to remove all excess internal space between the Viewing Alignment Sight, Viewing Lens Glass Pane(s) and the Vent Plate resulting from unavoidable manufacturing tolerances. The Cushions are to prevent movement and greatly reduce the potential for damage to the Internal Components when handling the Viewing Hood Assembly; DO NOT LOSE THE CUSHIONS.

5.□ Remove the Side Panels (Items 7) having the permanently attached Latches (Items 23) from the Viewing Hood Housing by unthreading the Hex Nuts (Items 28) and removing the Lock Washers (Items 27). Lift off the Side Panels from the Cap Screws (Items 26) projecting from the Viewing Hood Housing. NOTE: The Hex Nuts use a special prevailing torque screw thread to reduce their susceptibility to loosening when subjected to thermal cycling; AVOID LOSING THE HEX NUTS although they are replaceable with a standard (non-locking) hex nuts of the same thread size. Remove the Cap Screws by sliding them along the length and out from the End of the Internal Channel of the Viewing Hood Housing.

Inspection/Cleaning/Replacement of Viewing Hood Components – Perform the following inspections of the Components; clean or replace Components as necessary according to the instructions. Should replacement parts be needed, they can be identified and ordered by part number from Figure 5 Parts List in this Manual.

1.□ Viewing Lens Glass Pane(s) – Inspect the Viewing Lens Glass Pane(s) (Item(s) 17) for damage; if damage is evident or fractures are observed replace the Pane(s). If the Pane(s) are intact, clean them using common non-abrasive household glass cleaning solution and a cloth or paper towels. Take care not to saturate the Protective Tape affixed to the perimeter of the Pane(s) with the glass cleaning solution. Should the Protective Tape be missing, damaged or no longer adhering to Glass Edges, it can be replaced with a SINGLE LAYER of THIN masking-type tape suitable for a continuous exposure temperature of 185º F. (85º C.).

2.□ Viewing Alignment Sight - Inspect the Viewing Alignment Sight (Item 6); it must be flat (not bent). Clean away dust or debris that may have collected on the surface and in the Slot Openings using a cloth and a benign cleaning solution. Clean, dry compressed can be used to blow away dust.

3.□ Viewing Hood Housing, Side Panels, Vent Plate & End Caps – To maximize heat dissipation, use a cloth and a benign cleaning solution to remove a heavy accumulation of dirt, grime, oil, etc., from the Viewing Hood Housing, Side Panels (Items 7), Vent Plate (Item 3) and Upper and Lower End Caps (Items 4 & 5A). Use clean, dry compressed air to blow out dust/debris from all Vent Openings.

Viewing Hood Components Reassembly – The following instructions assume that the entire Viewing Hood is to be reassembled; skip over the instructions that are not pertinent to the inspection or repair being completed.

1.□ Attach Side Panels to Viewing Hood Housing - Align Hex Flats of the Cap Screws (Items 26) with the Internal Channel Slot in the End of the Viewing Hood Housing (Item 2) and slide-in the quantity of screws corresponding to the quantity of Bolt Holes in the Side Panel (Item 7). Orient the first Side Panel being attached as shown in Figure 1, place it against the Side of the Viewing Hood Housing next to where the Cap Screws are projecting from the Housing and align the Bottom Edge of the Side Panel with the Bottom Edge of the Viewing Hood Housing. Reposition the Cap Screws to line-up with the Panel Bolt Holes. Engage the Panel Bolt Holes with the Cap Screws then install Lock Washers (Items 27) onto the Cap Screws. Thread Hex Nuts (Items 28) onto the Cap Screws. While maintaining alignment of the Bottom Edges of the Side Panel and the Housing, tighten the Hex Nuts hand-tight. DO NOT exceed 30 in-lbs. applied torque. Repeat this process for the attaching the remaining Side Panel to the Opposite Side of the Viewing Hood Housing.

2.□ Install Viewing Alignment Sight – Orient the Viewing Alignment Sight (Item 6) with the Notched End facing downward toward the Bottom of the Viewing Hood; the Notch is so that the End of the Alignment Sight clears the Raised Boss in the Center of the Lower End Cap (Item 5A) when attached. Align the Edges of the Alignment Sight with the Narrow Slots located NEAR THE CENTER of the Viewing Hood Housing as shown in Figure 5 Parts List and carefully slide it completely into the Housing.

3.□ Install Viewing Lens Glass Pane(s) Having Taped-Protected Edges – A Viewing Hood longer than 10-Port will have multiple Viewing Lens Glass Panes (Items 17) that may be of unequal lengths. When installed, the relative positioning of the unequal length Glass Pane(s) has no effect on the Viewing Hood function however it is recommended that the longer Panes be installed such that they will be nearest to the Bottom End of the Viewing Hood Assembly.

A.□ NOTICE that one Side of the Viewing Lens Glass Pane is clear and the other is "frosted" (grit-blasted). For proper Viewing Hood function, the Glass Pane(s) MUST be oriented with the Frosted Side facing the Viewing Slots in the Viewing Hood Housing.

B.□ CAREFULLY align and install the Glass Pane(s) into the Slots located next to the machined Slotted Openings in the Wall of the Viewing Hood as shown in Figure 5 Parts List.

4.□ Fasten Lower End Cap to Viewing Hood Housing – Apply lubricant to the four (4) Cap Screws (Items 8) according to *DISASSEMBLY/ PARTS REPLACEMENT/REASSEMBLY – Important Disassembly/Reassembly Notes* Section in this Manual; set Cap Screws aside for later use.

A.□ The Diagonal Edge of the Lower End Cap (Item 5A) MUST be oriented the direction shown in the Top View of Figure 1 (the Upper End Cap (Item 4), Vent Plate (Item 3) and the Lower End Cap are all positioned with their Diagonal Edge oriented in the same direction). When correctly oriented, the Longer Side of the Lower End Cap will be positioned on the "Front Side" of the Viewing Hood Housing (Item 2); this is the Side OPPOSITE that having the Viewing Hood Nameplate (Item 14) (refer to Figure 1).

B.□ Align the Bolt Holes of the Lower End Cap with those in the End of the Viewing Hood Housing and engage the Lower End Cap Panel Guide Slots with the Bottom Edges of the Side Panels (Items 7). Install the for (4) previously lubricated Cap Screws (Items 8) thru the Lower End Cap Bolt Holes and thread into the Viewing Hood Housing. Tighten the Cap Screws hand-tight.

5.□ Install Cushion Cords, Vent Plate and Upper End Cap – It is highly recommended that the Viewing Hood Sub-assembly to be oriented upright in its normal operating position when installing these Components. Apply lubricant to the four (4) Cap Screws (Items 8) according to *DISASSEMBLY/PARTS REPLACEMENT/REASSEMBLY – Important Disassembly/Reassembly Notes* Section in this Manual; set Cap Screws aside for later use.

A.□ Apply finger-pressure to the Top End of the Viewing Alignment Sight (Item 6) and also to the Viewing Lens Glass Pane(s) (Item(s) 17) to ensure that they are firmly resting against the Inside Surface of the Lower End Cap (Item 5A).

B.□ Insert the Cushioning Cord Strips (Items 29 & 30) into the Slots of the Viewing Hood Housing (Item 2) and against, 1) the Top Edge of the Viewing Alignment Sight (Item 6) and, 2) the Top Edge of the Glass Pane. Extremely long Viewing Hoods may have more than one Cushioning Strip to be inserted into each Slot. When correctly installed, the Cushioning Strips will project slightly above flush with the Top End of the Viewing Hood Housing; the objective is to apply a slight compression to the Cushioning Strips when attaching the Upper End Cap (Item 4) to prevent movement and potential damage to the Internal Components when handling the Viewing Hood Assembly.

C.□ The Diagonal Edges of the Vent Plate (Item 3) and Upper End Cap (Item 4) MUST be oriented the direction shown in the Top View of Figure 1. When correctly oriented, the Longer Side of both Parts will be positioned on the "Front Side" of the Viewing Hood Housing; this is the Side OPPOSITE that having the Viewing Hood Nameplate (Item 14) (refer to Figure 1).

D.□ Align the Bolt Holes of the Vent Plate with those in the End of the Viewing Hood Housing and engage the Panel Guide Slots of the Vent Plate with the Top Edges of the Side Panels (Items 7). Place the Upper End Cap on top of the Vent Plate and align the Bolt Holes. Install the four (4) previously lubricated Cap Screws (Items 8) thru the Bolt Holes of the Upper End Cap and Vent Plate and thread into the Viewing Hood Housing. Tighten the Cap Screws hand-tight.

POWER SUPPLY AND FITTINGS REMOVAL/REATTACHMENT

The STBI-3000A Illuminator has two (2) available Power Supplies; the Standard NEMA 4X (Weatherproof and corrosion resistant) Unit and the Optional Hazardous Locations (Intrinsically safe and explosion-proof, Class I, Division 1, Groups B, C & D) Unit. As shown in Figure 5 Parts List, the Electrical Cable Fittings arrangements are different. If unsure which Unit is installed, refer to "STBI-3000A Illuminator & Viewing Hood", Para. 4.B on Page 4 of this Manual that explains how to determine Power Supply Unit identification.

There are no user serviceable Components inside the Power Supply Units. In the event of a failure, the entire Power Supply Unit must be replaced. The following instructions describe the procedures for removal and reattachment of the Power Supply Unit and Primary Electrical Cable. See *INSTALLATION,* Para. 4 on Page 4 of this Manual for instructions on connecting the input power source to the Power Supply Unit

CAUTION: NEVER remove, attach, service or repair the Power Supply Unit or its associated Hardware (Electrical Cable, Conductor Wire Leads, Fittings, Cover, etc.), without first shutting-off and locking-out the input power source to the Power Supply Unit to prevent inadvertent electrical energizing. Failure to abide to this warning can result in serious personal injury or death. Depending on the specific configuration of the wiring (connections and encasements) external to the Power Supply Unit, it may be necessary to disconnect/reconnect electrical hardware connections. It is the user's responsibility to ensure that electrical servicing procedures are performed by a Qualified Electrician and complies with applicable industrial electrical Codes (USA: Refer to National Electrical Code NFPA current edition; Canada: Refer to Canadian Electrical Code CSA C22) having jurisdictional authority for the installation type and location as applicable.

The following procedures assume that all rigidly-mounted electrical encasements have been removed such that the Power Supply Unit is being held in its position by only the Power Supply Enclosure/Illuminator Fasteners and is free to move when Fasteners are loosened/removed.

Standard NEMA 4X Power Supply Unit and Electrical Cable Removal

1. Loosen both Nuts of the Union Elbow (Item 15A2). While providing hand-support to the Bottom of the Power Supply Enclosure, loosen the retaining Set Screw threaded into its Enclosure. Slide the Power Supply Unit along the side of the Illuminator Housing (Item 1) away from the Elbow far enough to disengage the Tube Fitting installed in the Top Cap of the Power Supply Housing from the Union Elbow and expose the Electrical Cables Connection Junction. While holding the Power Supply in this position, temporarily retighten the Set Screw. Disconnect the Electrical Cables by pressing inward the Locking Tab of the Connector on the End of the Cable coming from the Power Supply while pulling apart the End Connectors of both Cables. Loosen the Enclosure Set Screw and slide the Power Supply Unit along the Side of and off of the Illuminator Housing.
2. To remove the Primary Electrical Cable, the Illuminator must be partially disassembled; Cap Screws (Item 8), Lower End Cap (Item 5A or 5B) and LED Circuit Board(s)/Brackets Assembly (Items 18, 12 &, as applicable, Item19) must be removed from the Illuminator Housing (Item 1). See "Illuminator Components Disassembly" Section in this Manual for instructions. With these Components removed, remove the Union Elbow (Item 15A2) from the Tube Adapter (Item15A1) while GENTLY simultaneously pulling out the Cable; reach inside the Illuminator Housing to access Cable to help feed it back thru the Tube Adapter. GENTLY pull the SMALL FEMALE CONNECTOR END of the Cable thru the Elbow to remove (the large Male Connector End of the Cable will NOT pass thru the Elbow).

Inspect Primary Electrical Cable

Inspect the Primary Electrical Cable (Item 9) for abrasion, cracks and missing insulation (exposed Bare Wires). Inspect the End Connectors for cracks and loose wire insertions; replace Cable if necessary. If reusing the Cable, be certain that the End Connectors are free of dust/debris; use clean, dry compressed air to clean. Should replacement parts be needed, they can be identified and ordered by part number from Figure 5 Parts List in this Manual.

Standard NEMA 4X Power Supply Unit and Electrical Cable Installation

1. About 1" beyond the End of the SMALL FEMALE CONNECTOR, bend the Primary Electrical Cable (Item 9) approximately 90º then GENTLY push it thru the Union Elbow (Item 15A2), and from the Elbow thru the Tube Adapter (Item 15A1) installed in the Side of the Illuminator Housing (Item 1). Slide the Elbow onto the Tube Adapter. GENTLY pull the Cable the remaining distance thru the fittings and into the Illuminator Housing Interior until only the Full Length of the LONG MALE CONNECTOR END remains exposed from the End of the Elbow as shown in Figure 5 Parts List. Where the Cable enters the Interior of the Illuminator Housing (just beyond the Hex Pipe Nut (Item 10)), make a small bend in the Cable then route the Cable along the Inside of the Illuminator Housing Wall Channel to the Bottom End and out of the Illuminator Housing. See "Illuminator Components Assembly" Section in this Manual for connecting the Cable to the Illuminator.
2. Orient the Power Supply Unit with its Tube Adapter Fitting (threaded into the Enclosure Upper Cap) facing toward the Union Elbow (Item 15A2) of the Illuminator and engage the Rails of the Power Supply Enclosure with the Slots on the Side of the Illuminator Housing. Slide the Power Supply Enclosure along the Side of the Housing until about 2" from the End Connector of the Primary Electrical Cable (Item 9) projecting from the Elbow; temporarily tighten the Set Screw in the Power Supply Enclosure to maintain this position.

3. Bring the Connector Ends of the Primary Electrical Cable and the Power Supply Cable together and connect the two Cables. NOTE: The End Connectors of the Electrical Cables are directional and have ONE correct orientation to fully engage and lock into each other. If the End Connectors do not initially fully engage and lock, rotate one of them 90º and retry.
4. While providing hand-support to the Bottom of the Power Supply Enclosure, loosen the retaining Set Screw threaded into the Enclosure. Slide the Power Supply Unit along the side of the Illuminator Housing and engage the Tube Adapter Fitting of the Power Unit about 1/2 of its length with the Union Elbow (thereby concealing the Cables Connection Junction). Hold the Power Supply Unit in this position and tighten the Enclosure Set Screw snug. Tighten both Nuts of the Union Elbow.

Optional Hazardous Locations Power Supply Unit and Electrical Cable Removable

1. While providing hand-support to the Bottom of the Power Supply Enclosure, loosen the retaining Set Screw threaded into the Enclosure. Slide the Power Supply Unit along the side of the Illuminator Housing (Item 1) until several inches away from Power Supply Cover (Item 15B3) to expose the Electrical Cables Connection Junction. While holding the Power Supply in this position, temporarily retighten the Set Screw. Disconnect the Electrical Cables by pressing inward the Locking Tab of the Connector on the End of the Cable coming from the Power Supply while pulling apart the End Connectors of both Cables. Loosen the Enclosure Set Screw and slide the Power Supply Unit along the Side of and off of the Illuminator Housing.
2. To remove the Primary Electrical Cable, the Illuminator must be partially disassembled; Cap Screws (Item 8), Lower End Cap (Item 5A or 5B) and LED Circuit Board(s)/Brackets Assembly (Items 18, 12 &, as applicable, Item19) must be removed from the Illuminator Housing (Item 1). See "Illuminator Components Disassembly" Section in this Manual for instructions. With these Components removed, GENTLY feed the LARGE MALE CONNECTOR END of the Cable (Item 9) thru the Cable Guard Fitting (Item 15B1) located inside the Power Supply Cover on the side of the Illuminator Housing (Item 1). Reach inside the Illuminator Housing and remove the Cable from the Illuminator.

Inspect Primary Electrical Cable

Inspect the Cable Insulation for abrasion, cracks and missing insulation (exposed Bare Wires). Inspect the End Connectors for cracks and loose wire insertions; replace Cable if necessary. If reusing be certain that the End Connectors are free of dust/debris; use clean, dry compressed to clean. Should replacement parts be needed, they can be identified and ordered by part number from Figure 5 Parts List at the end of this Manual.

Optional Hazardous Locations Power Supply Unit and Electrical Cable Installation

1. From the Interior of the Illuminator Housing (Item 1), insert the LARGE MALE CONNECTOR END of the Primary Electrical Cable (Item 9) thru the Cable Guard Fitting (Item 15B1) and into the Power Supply Unit Cover (Item 15B3). GENTLY pull about 3" of Cable (that includes the length of the End Connector) into the Cover. From the inside of the Illuminator Housing where the Cable enters the Interior just beyond the Hex Pipe Nut (Item 10), make a small bend in the Cable then route the Cable along the Inside of the Illuminator Housing Wall Channel to the Bottom End and out of the Illuminator Housing. See "Illuminator Components Assembly" Section in this Manual for connecting the Cable to the Illuminator.
2. Orient the Power Supply Unit with its Electrical Cable facing toward the Power Supply Cover on the Illuminator and engage the Rails of the Power Supply Enclosure with the Slots on the Side of the Illuminator Housing. Slide the Power Supply Enclosure along the Side of the Housing until about 2" from the Cover and temporarily tighten the retaining Set Screw threaded into the Power Supply Enclosure.
3. Bring the Connector Ends of the Primary Electrical Cable and the Power Supply Cable together and connect the two Cables. NOTE: The End Connectors of the Electrical Cables are directional and have ONE correct orientation to fully engage and lock into each other. If the End Connectors do not initially fully engage and lock, rotate one of them 90º and retry. Tuck excess Cable up inside the Center of the Cover such that the Cable will not be pinched when the power Supply Unit is positioned against the Cover.
4. While providing hand-support to the Bottom of the Power Supply Enclosure, loosen the retaining Set Screw threaded into the Enclosure. Slide the Power Supply Unit along the side of the Illuminator Housing and engage the Top Cap of the Power Supply Enclosure with the Cover. Hold the Power Supply Unit in this position and tighten the Enclosure Set Screw snug.

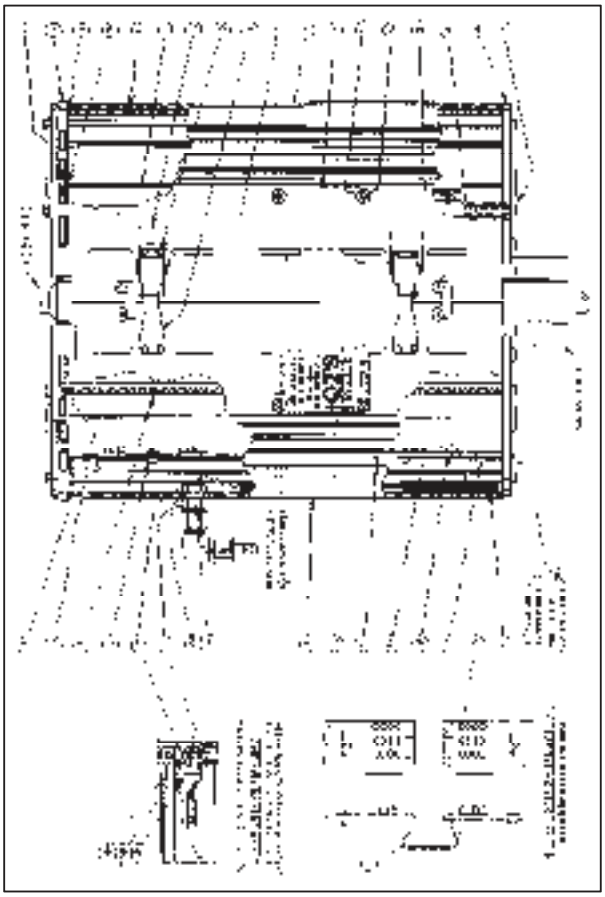

Figure 5 (Page 1 of 3) STBI-3000A Bi-color Illuminator & Viewing Hood Parts List

Figure 5. (Page 2 of 3) STBI-3000A Bi-color Illuminator & Viewing Hood Parts List

Figure 5. (Page 3 of 3) STBI-3000A Bi-color Illuminator & Viewing Hood Parts List

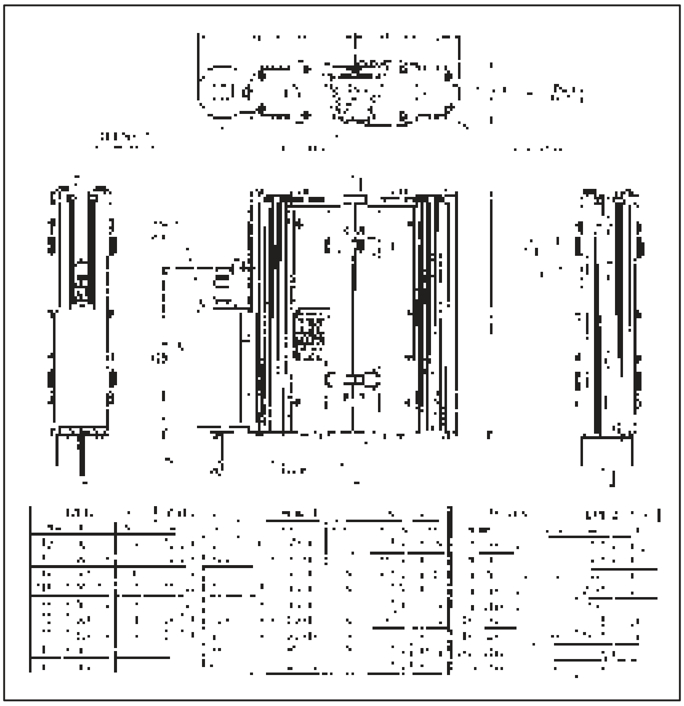

Figure 6. Installation Dimensions - STBI-3000A Bi-color Illuminator & Viewing Hood Assembly with Standard NEMA 4X Power Supply Unit

QTS Quest-Tec Solutions
13960 S. Wayside Dr. | Houston, TX 77048 | Toll Free: 866 240 9906 | Tel: 281 240 0440
Fax: 281 240 2440 | www.QTSlevel.com | Sales@QTSlevel.com

1.0 Operating Principle

[illegible]

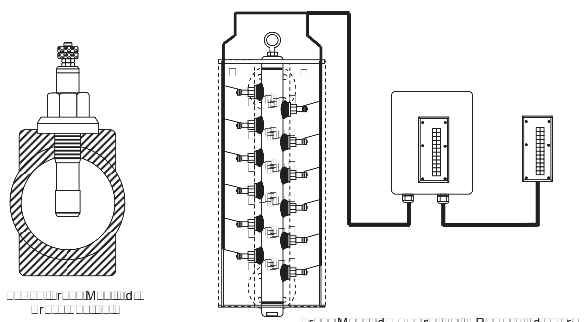

2.0 System Configuration

[illegible]

2.1 Channel Assignment

Alarm, Trip and Indicator Flash: [illegible]

Cable Monitoring: [illegible]

2.1 Local Indication

[illegible]

2.2 Remote Indication

[illegible]

2.3 Alarm/Trip and Fault Detection Relays

[illegible]

2.4 Sensitivity

[illegible]

2.5 4-20mA Output

[illegible]

2.6 Indicator Flash

[illegible]

2.7 Test Switches

[illegible]

2.8 System Fault

[illegible]

[illegible]

3.0 Installation and Cabling

3.1 Enclosure

[illegible]

3.2 Main Power Supply

[illegible]

3.3 Wiring Control Unit-to-Probes

[illegible]

[illegible]

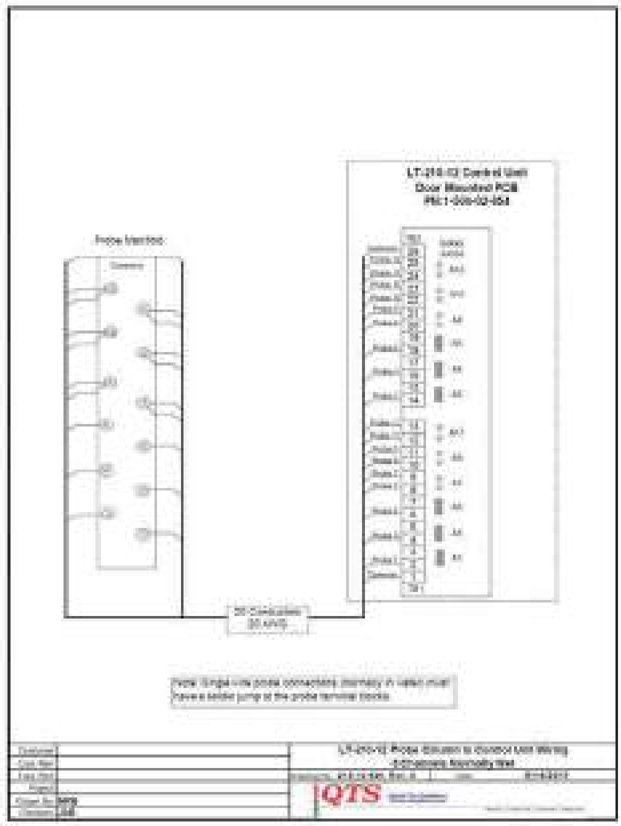

[illegible]

3.4 Wiring Alarm/Trip Relays and 4-20 mA

[illegible]

[illegible]

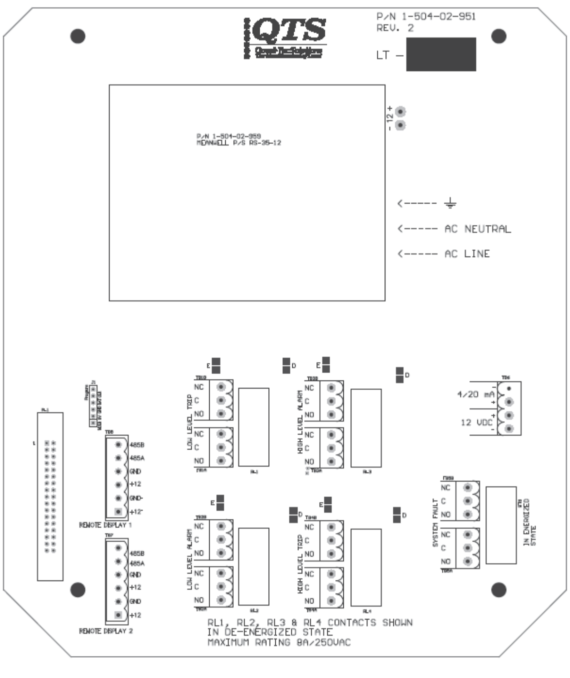

[illegible]

3.5 Panel Mount Remote Level Indicator

[illegible]

[illegible]

4.0 Commissioning

[illegible]

[illegible]

[illegible]

[illegible] *To prevent permanent damage to the discriminator PCB, confirm that the wiring to the indicator is correct before powering up.* [illegible]

[illegible]

[illegible]

5.0 Routine Maintenance

[illegible]

5.0 LT-210 Control Unit Specifications

Enclosure:

Dimensions:

Inputs:

Sensitivity:

Probe Normal State:

Display:

Supply Requirements:

Utility Consumption:

Temperature Rating:

Relay Outputs:

Alarms:

Trips:

Fault Alarm:

Relay Ratings:

4-20 mA Signal:

Remote Display:

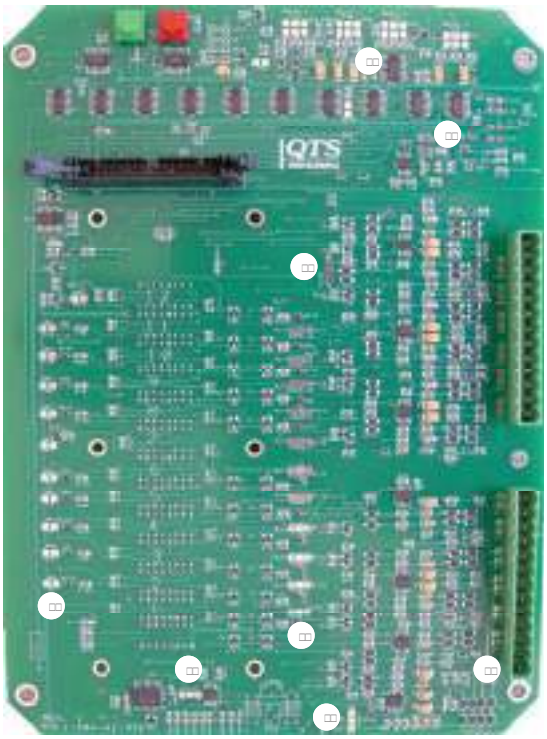

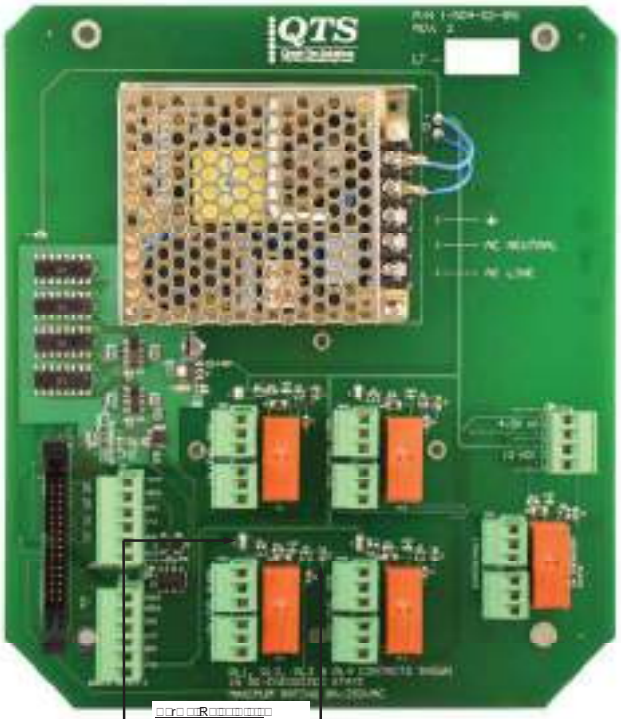

Appendix A

LT-210 Low level Trip Logic

Trip on 1

Solder Jump: None																
	Wet	Dry	Wet	Dry	Wet	Dry	Wet	Dry	Wet	Dry	Wet	Dry	Wet	Dry	Wet	Dry
	Wet	Wet	Dry	Dry	Wet	Wet	Dry	Dry	Wet	Wet	Dry	Dry	Wet	Wet	Dry	Dry
	Wet	Wet	Wet	Wet	Dry	Dry	Dry	Dry	Wet	Wet	Wet	Wet	Dry	Dry	Dry	Dry
	Wet	Wet	Wet	Wet	Wet	Wet	Wet	Wet	Dry	Dry	Dry	Dry	Dry	Dry	Dry	Dry
RL1												Trip	Trip	Trip	Trip	Trip

Trip on 2

Solder Jump: LLT2																
	Wet	Dry	Wet	Dry	Wet	Dry	Wet	Dry	Wet	Dry	Wet	Dry	Wet	Dry	Wet	Dry
	Wet	Wet	Dry	Dry	Wet	Wet	Dry	Dry	Wet	Wet	Dry	Dry	Wet	Wet	Dry	Dry
	Wet	Wet	Wet	Wet	Dry	Dry	Dry	Dry	Wet	Wet	Wet	Wet	Dry	Dry	Dry	Dry
	Wet	Wet	Wet	Wet	Wet	Wet	Wet	Wet	Dry	Dry	Dry	Dry	Dry	Dry	Dry	Dry
RL1							Trip	Trip				Trip	Trip	Trip	Trip	Trip

Trip on 3

Solder Jump: LLT2 & LLT3																
	Wet	Dry	Wet	Dry	Wet	Dry	Wet	Dry	Wet	Dry	Wet	Dry	Wet	Dry	Wet	Dry
	Wet	Wet	Dry	Dry	Wet	Wet	Dry	Dry	Wet	Wet	Dry	Dry	Wet	Wet	Dry	Dry
	Wet	Wet	Wet	Wet	Dry	Dry	Dry	Dry	Wet	Wet	Wet	Wet	Dry	Dry	Dry	Dry
	Wet	Wet	Wet	Wet	Wet	Wet	Wet	Wet	Dry	Dry	Dry	Dry	Dry	Dry	Dry	Dry
RL1				Trip			Trip	Trip				Trip	Trip	Trip	Trip	Trip

Trip on 4

Solder Jump: LLT2 & LLT3 & LLT4																
	Wet	Dry	Wet	Dry	Wet	Dry	Wet	Dry	Wet	Dry	Wet	Dry	Wet	Dry	Wet	Dry
	Wet	Wet	Dry	Dry	Wet	Wet	Dry	Dry	Wet	Wet	Dry	Dry	Wet	Wet	Dry	Dry
	Wet	Wet	Wet	Wet	Dry	Dry	Dry	Dry	Wet	Wet	Wet	Wet	Dry	Dry	Dry	Dry
	Wet	Wet	Wet	Wet	Wet	Wet	Wet	Wet	Dry	Dry	Dry	Dry	Dry	Dry	Dry	Dry
	Wet	Wet	Wet	Wet	Wet	Wet	Wet	Wet	Wet	Wet	Wet	Wet	Wet	Wet	Wet	Wet
RL1				Trip			Trip	Trip				Trip	Trip	Trip	Trip	Trip

Trip on 4 (cont.)

	Wet	Dry	Wet	Dry	Wet	Dry	Wet	Dry	Wet	Dry	Wet	Dry	Wet	Dry	Wet	Dry
	Wet	Wet	Dry	Dry	Wet	Wet	Dry	Dry	Wet	Wet	Dry	Dry	Wet	Wet	Dry	Dry
	Wet	Wet	Wet	Wet	Dry	Dry	Dry	Dry	Wet	Wet	Wet	Wet	Dry	Dry	Dry	Dry
	Wet	Wet	Wet	Wet	Wet	Wet	Wet	Wet	Dry	Dry	Dry	Dry	Dry	Dry	Dry	Dry
	Dry	Dry	Dry	Dry	Dry	Dry	Dry	Dry	Dry	Dry	Dry	Dry	Dry	Dry	Dry	Dry
RL1				Trip			Trip	Trip	Trip	Trip	Trip	Trip	Trip	Trip	Trip	Trip

LT-210 High level Trip Logic

Trip on 12

Solder Jump: None

	Wet	Dry	Wet	Dry	Wet	Dry	Wet	Dry	Wet	Dry	Wet	Dry	Wet	Dry	Wet	Dry
	Wet	Wet	Dry	Dry	Wet	Wet	Dry	Dry	Wet	Wet	Dry	Dry	Wet	Wet	Dry	Dry
	Wet	Wet	Wet	Wet	Dry	Dry	Dry	Dry	Wet	Wet	Wet	Wet	Dry	Dry	Dry	Dry
	Wet	Wet	Wet	Wet	Wet	Wet	Wet	Wet	Dry	Dry	Dry	Dry	Dry	Dry	Dry	Dry
	Trip		Trip		Trip		Trip		Trip				Trip			

Trip on 11

Solder Jump: HLT11

	Wet	Dry	Wet	Dry	Wet	Dry	Wet	Dry	Wet	Dry	Wet	Dry	Wet	Dry	Wet	Dry
	Wet	Wet	Dry	Dry	Wet	Wet	Dry	Dry	Wet	Wet	Dry	Dry	Wet	Wet	Dry	Dry
	Wet	Wet	Wet	Wet	Dry	Dry	Dry	Dry	Wet	Wet	Wet	Wet	Dry	Dry	Dry	Dry
	Wet	Wet	Wet	Wet	Wet	Wet	Wet	Wet	Dry	Dry	Dry	Dry	Dry	Dry	Dry	Dry
	Trip	Trip	Trip		Trip		Trip		Trip	Trip			Trip			

Trip on 10

Solder Jump: HLT11 & HLT10

	Wet	Dry	Wet	Dry	Wet	Dry	Wet	Dry	Wet	Dry	Wet	Dry	Wet	Dry	Wet	Dry
	Wet	Wet	Dry	Dry	Wet	Wet	Dry	Dry	Wet	Wet	Dry	Dry	Wet	Wet	Dry	Dry
	Wet	Wet	Wet	Wet	Dry	Dry	Dry	Dry	Wet	Wet	Wet	Wet	Dry	Dry	Dry	Dry
	Wet	Wet	Wet	Wet	Wet	Wet	Wet	Wet	Dry	Dry	Dry	Dry	Dry	Dry	Dry	Dry
	Trip				Trip				Trip				Trip			

Trip on 9

Solder Jump: HLT11, HLT10 & HLT9

	Wet	Dry	Wet	Dry	Wet	Dry	Wet	Dry	Wet	Dry	Wet	Dry	Wet	Dry	Wet	Dry
	Wet	Wet	Dry	Dry	Wet	Wet	Dry	Dry	Wet	Wet	Dry	Dry	Wet	Wet	Dry	Dry
	Wet	Wet	Wet	Wet	Dry	Dry	Dry	Dry	Wet	Wet	Wet	Wet	Dry	Dry	Dry	Dry
	Wet	Wet	Wet	Wet	Wet	Wet	Wet	Wet	Dry	Dry	Dry	Dry	Dry	Dry	Dry	Dry
	Trip	Trip			Trip				Trip	Trip			Trip			

Trip on 8

Solder Jump: HLT11, HLT10, HLT9 & HLT8

	Wet	Dry	Wet	Dry	Wet	Dry	Wet	Dry	Wet	Dry	Wet	Dry	Wet	Dry	Wet	Dry
	Wet	Wet	Dry	Dry	Wet	Wet	Dry	Dry	Wet	Wet	Dry	Dry	Wet	Wet	Dry	Dry
	Wet	Wet	Wet	Wet	Dry	Dry	Dry	Dry	Wet	Wet	Wet	Wet	Dry	Dry	Dry	Dry
	Wet	Wet	Wet	Wet	Wet	Wet	Wet	Wet	Dry	Dry	Dry	Dry	Dry	Dry	Dry	Dry
	Trip	Trip	Trip	Trip	Trip		Trip		Trip	Trip			Trip			

Installing and Removing Covers

To remove cover:

To install new cover

Changing out the latches

UNTIL COMPLETELY SEATED

Adding Mounting Feet

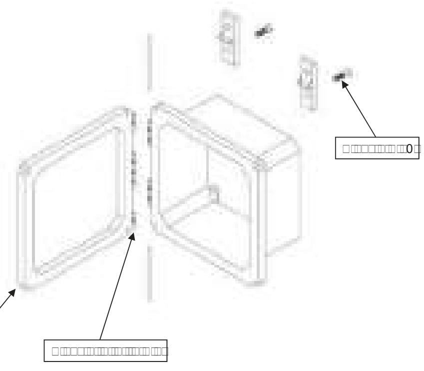

M22759/12-20 16 CONDUCTOR CABLE UNSHIELDED
EXTRUDED WHITE PFA JACKET

PRIMARY WIRE TYPE	M22759/12-20-9
CONDUCTOR SIZE	20 19/32
CONDUCTOR MATERIAL	NICKEL PLATED COPPER
CONDUCTOR DIAMETER	.037" - .041"
PRIMARY INSULATION MATERIAL	PTFE
PRIMARY WIRE DIAMETER	.056" - .060"

CABLE CONSTRUCTION

NUMBER OF CONDUCTORS	16
COLOR CODE	9-90-93-954-92-95-94-97-90-91 901,902,903,904,905,906
JACKET MATERIAL	PFA
JACKET COLOR	WHITE
JACKET THICKNESS	.015" NOMINAL
CABLE FINISHED DIAMETER	.305" NOMINAL

PERFORMANCE CHARACTERISTICS

TEMPERATURE RATING	500° F / 260° C
VOLTAGE RATING	600 VOLTS

Operating Principle

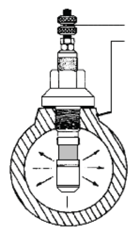

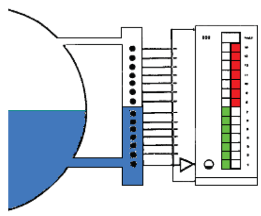

2.0 Mechanical Installation Considerations

3.0 Installation & Cabling

4.0 Probes

Tighten probes if necessary.

QTS Quest-Tec Solutions

INSTALLATION, OPERATION AND INSTRUCTION MANUAL

Level-Trac Model LT-310 Control Unit

1.0 Operating Principle 2

2.0 System Configuration 2
- 2.1 Channel Assignment 3
- 2.2 Alarm/Trip and Fault Detection Relays 3
  - 2.2.1 Alarm Relays 3
  - 2.2.2 Trip Relays 3
- 2.3 Sensitivity 3
- 2.4 Test Switches 4
- 2.5 System Fault 4
- 2.3 Process Fault 4

3.0 Installation & Cabling 4
- 3.1 Enclosure
- 3.2 Main Power Supply 4
- 3.3 Wiring Control Unit to Probes 5
- 3.4 Wiring Alarm/Trip Relays 6
- 3.5 Panel Mount Remote Indicator 7

4.0 Commissioning 7

5.0 System Specification 8

6.0 Field Programming 9
- 6.1 Discriminator PCB 9
- 6.2 Power Supply/Relay PCB 10

Figures

1.1 System Overview 2

3.3.1 Wiring Control Unit to Probes 6

3.2.1 Wiring Alarm/Trip Relays 6

Appendices

Appendix A: Instructions for Mounting Stahlin Enclosures 11

Appendix B: 16 Conductor High Temp Cable Specification 12

Note: This document should be reviewed in its entirety prior to installation of equipment.

13960 South Wayside Drive • Houston, TX 77048 • USA

Telephone: +1 (281) 240-4440 • Facsimile: +1 (281) 240-2949 • Email: sales@QTSLevel.com

www.QTSLevel.com

1.0 Operating Principle

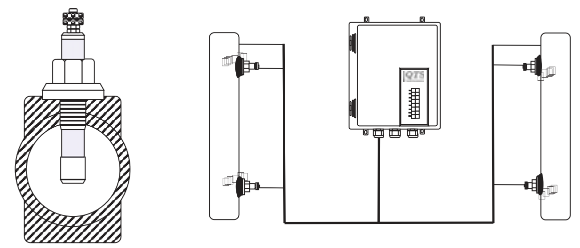

2.0 System Configuration

2.1 Channel Assignment

Alarm/Trip State:

Cable Monitoring:

2.1 Local Indication

2.2 Alarm/Trip and Fault Detection Relays

Relay	Alarm/Trip		
	Single Channel	Channel Pairings	Voting Logic 2 out of 3 Channels
R[illegible]	[illegible]	[illegible]	[illegible]
R[illegible]	[illegible]	[illegible]	[illegible]
R[illegible]	[illegible]	[illegible]	[illegible]
R[illegible]	[illegible]	[illegible]	[illegible]
R[illegible]	[illegible]	[illegible]	[illegible]
R[illegible]	[illegible]	[illegible]	[illegible]

2.3 Sensitivity

2.4 Test Switches

2.5 System Fault

2.6 Process Fault

3.0 Installation and Cabling

3.1 Enclosure

3.2 Main Power Supply

3.3 Wiring Control Unit-to-Probes

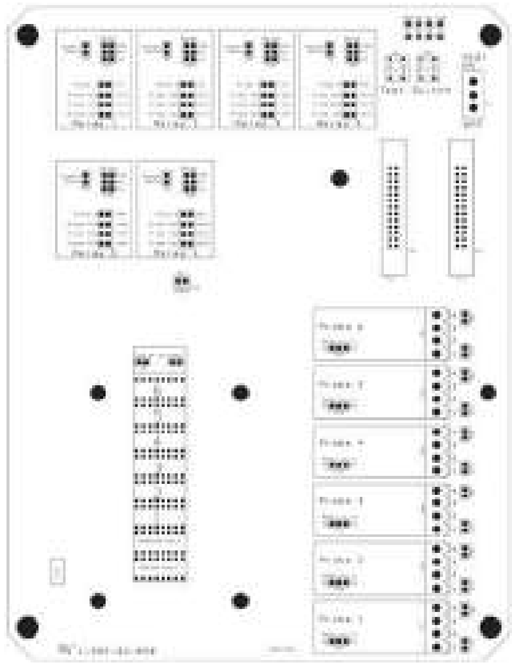

3.4 Wiring Alarm/Trip Relays

Note: If the continuous load is anticipated to be greater than 5A at 250 VAC, the board traces must be replaced with wire. This is a factory modification.

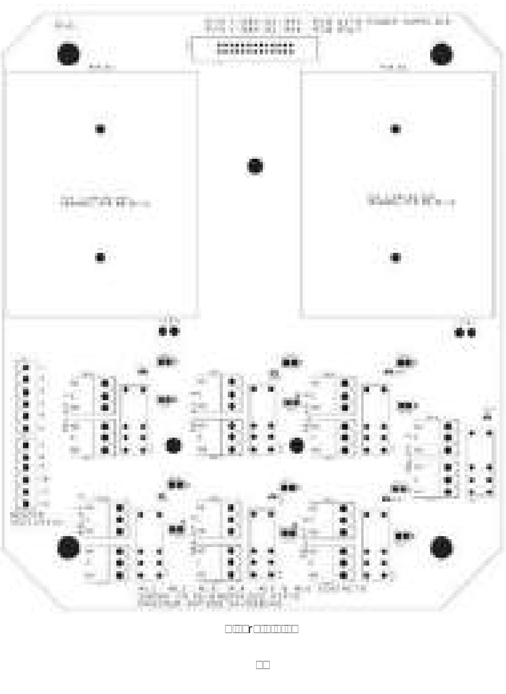

3.5 Panel Mount Remote Level Indicator

4.0 Commissioning

To prevent permanent damage to the discriminator PCB, confirm that the wiring to the indicator is correct before powering up.

5.0 Routine Maintenance

5.0 LT-310 Control Unit Specifications

Enclosure:

Dimensions:

Inputs:

Sensitivity:

Probe Normal State:

Display:

Supply Requirements:

Utility Consumption:

Temperature Rating:

Relay Outputs:

Alarms/Trips:

Fault Alarm:

Relay Ratings:

Remote Display:

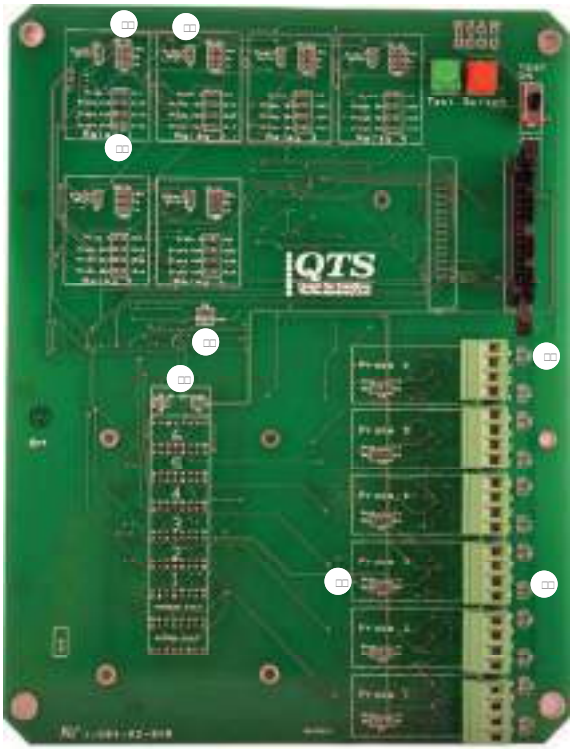

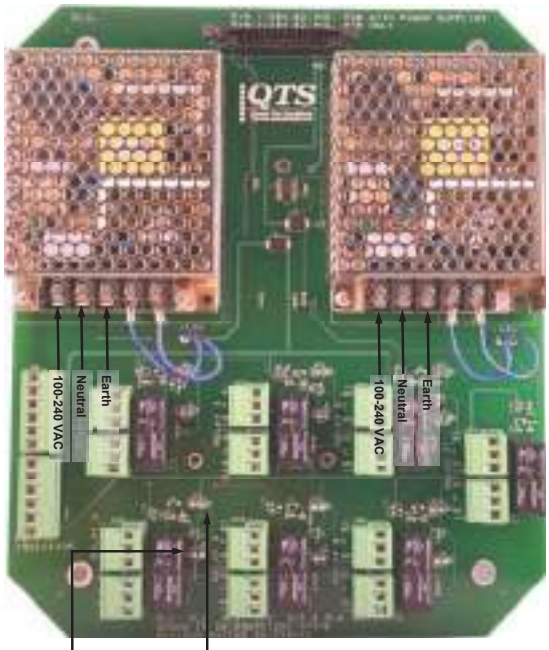

Installing and Removing Covers

To remove cover:

To install new cover

Changing out the latches

UNTIL COMPLETELY SEATED

Adding Mounting Feet

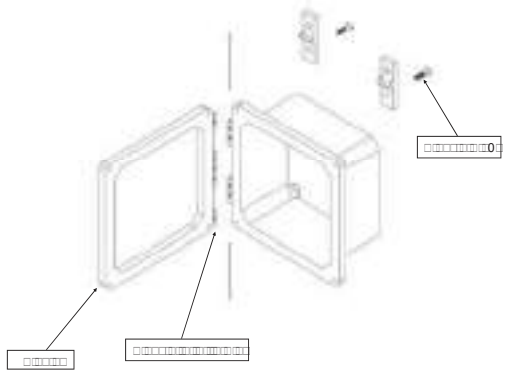

QTS Quest-Tec Solutions

Spec	M22759-12-20-16C	Date	July 16, 2009
By		Approved	

M22759/12-20 16 CONDUCTOR CABLE UNSHIELDED EXTRUDED WHITE PFA JACKET

PRIMARY WIRE TYPE	M22759/12-20-9
CONDUCTOR SIZE	20 16/32
CONDUCTOR MATERIAL	NICKEL PLATED COPPER
CONDUCTOR DIAMETER	.037" - .041"
PRIMARY INSULATION MATERIAL	PTFE
PRIMARY WIRE DIAMETER	.056" - .060"

CABLE CONSTRUCTION

NUMBER OF CONDUCTORS	16
COLOR CODE	9-66-93-954-93-90-94-07-08-01 901,902,963,964,965,966
JACKET MATERIAL	PFA
JACKET COLOR	WHITE
JACKET THICKNESS	.015" NOMINAL
CABLE FINISHED DIAMETER	.303" NOMINAL

PERFORMANCE CHARACTERISTICS

TEMPERATURE RATING	500° F / 260° C
VOLTAGE RATING	600 VOLTS

TYPE E-The negative wire has lower resistance in ohms per foot than the positive element for the same size wire.

Note: When in doubt, twist the wire together, and connect opposite ends to a volt meter. Heat the twisted end with a cigarette lighter. If the volts go up - polarity is correct ...

OPERATION:

The temperature of the connection head should be kept as near room temperature as possible to avoid errors due to the extension wires. The maximum recommended temperature at the terminal block is 400°F.

MAINTENANCE:

The quality and frequency of calibration checks must be determined for each individual application by noting the decalibration rate of each thermocouple at individual installations. Thermocouples will deteriorate due to contamination from their environments. Calibration is usually made by comparison with a working standard. The thermocouple may be removed from its installation and checked in an electric furnace with the working standard; however, check the thermocouple in its installed position and location if possible. See page VI.

Return thermocouples that were removed for tests to the same location and immersion depth for reliable and repeatable readings.

Do not use a thermocouple to measure a very low temperature if it has been used to measure a very high temperature previously.

Make sure protection tubes and thermowells are in good condition when protecting thermocouples with them.

Do not run a single thermocouple to two different instruments. This can result in instrument imbalance. A dual isolated thermocouple should be used instead.

STORAGE:

Store in a clean dry place. Avoid stacking probes in areas of excessive moisture or humidity (ie: dripping, condensation). Special packing with desiccant can be specified. (See page II)

Vogt Power International Project V17491 – AMATA ABPR5 – PO V0010427

Tagging:

51HAH10CT004	52HAH10CT004	51HAH10CT003	52HAH10CT003
51HAH10CT006	52HAH10CT006	51HAH10CT002	52HAH10CT002
51HAH10CT005	52HAH10CT005	51HAH10CT001	52HAH10CT001
51HAH50CT001	52HAH50CT001	51HAH50CT002	52HAH50CT002
50LCA50CT002	51LAE10CT001	52LAE10CT001	51HAC50CT001
52HAC50CT001	51LAB50CT001	52LAB50CT001	51LCQ10CT002
52LCQ10CT002	51HAC20CT001	52HAC20CT001	51LAB10CT001
52LAB10CT001	05LAA10CT001	05LAA10CT002	51LCQ10CT001
52LCQ10CT001	51LAE10CT001		

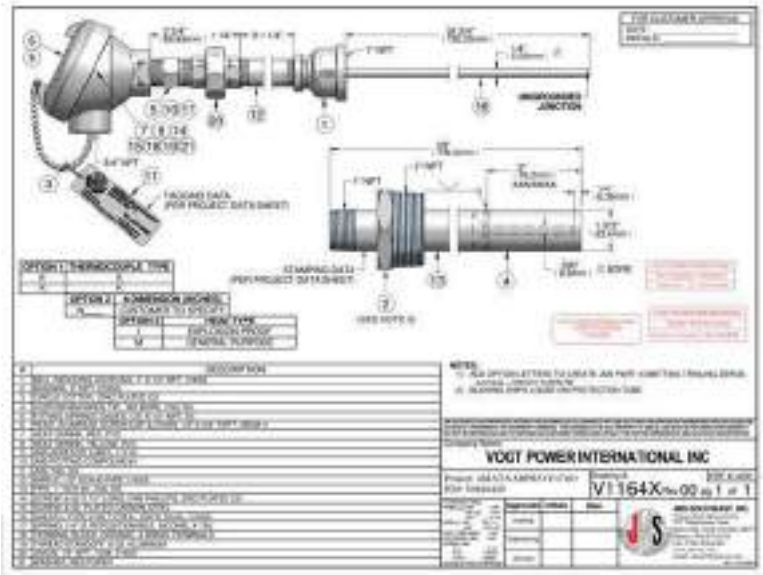

JMS Part Number	T/C Type	[illegible]	Head Type	Tagging
[illegible]	[illegible]	[illegible]	[illegible]	[illegible]
				[illegible]
				[illegible]
				[illegible]
				[illegible]
				[illegible]
				[illegible]

JMS SOUTHEAST INCORPORATED CERTIFIES THIS DRAWING IS IN ACCORDANCE WITH JMS SOUTHEAST INCORPORATED ENGINEERING SPECIFICATIONS AND ACCURATELY REPRESENTS THE EQUIPMENT FURNISHED. THIS DRAWING IS THE SOLE PROPERTY OF JMS SE, AND MUST BE RETURNED UPON REQUEST OR UPON COMPLETION OF THE OPERATION FOR WHICH IT WAS LOANED. DO NOT REPRODUCE OR DISCLOSE THIS DRAWING OR THE INFORMATION CONTAINED THEREIN USED WITHOUT THE WRITTEN AUTHORIZATION OF JMS SOUTHEAST INCORPORATED

Company Name:

VOGT POWER INTERNATIONAL INC

Project: AMATA ABPR5 #V17491
PO#: V0010429

Drawing #: V1164 (TAGGING DATA)

ERF #: 4291

Approvals	Initials	Date
Drafting		
Engineering		
Second		

JMS SOUTHEAST, INC.
Temperature Measurement
105 Temperature Lane
Statesville, North Carolina 28677
Phone: (704) 873-1835
Fax: (704) 878-6166
www.jms-se.com
Email: sensors@jms-se.com

REV. 4-13-2004

INSTALLATION AND MAINTENANCE INSTRUCTIONS FOR ASHCROFT® BIMETAL DIAL THERMOMETERS

ASHCROFT

GENERAL

In removing the thermometer out of the packing box, handle it by the case or case outer. Avoid handling it by the stem.

INSTALLATION OF THERMOMETERS

The thermometer should be mounted at any convenient location where it will be subjected to the average temperature variations to be indicated.

Avoid bending the stem as this will cause misalignment of the internal parts, resulting in unstable frictional errors.

To tighten the thermometer to the apparatus, use a wrench applied to the hexagon head of the threaded connection located just outside of the case.

INSTALLATION

Locate the stem so that at least two inches will be subjected to the average temperature to be measured.

Exposing the stem to a temperature in excess of the highest dial reading should be avoided.

The thermometer is normally provided with a threaded connection. To tighten the thermometer to the apparatus or into the well, use an open end wrench applied to the hexagon head of the threaded connection Turn until reasonably tight, then tighten still further in the same manner as a pipe-elbow or similar pipe fitting until the scale is in the desired position for reading. DO NOT TIGHTEN BY TURNING THE THERMOMETER CASE. *Install the dry type thermometer so that the maximum case temperature is kept below 200°F at all times. Install the liquid filled type thermometer so that the maximum case temperature is kept below 150°F at all times.*

When a thermometer is equipped with a well, the well should be installed onto the apparatus first. The stem of the thermometer should then be coated with a heat conducting medium (a mixture of glycerin and graphite or vaseline or any other heavy lubricant may be used), after which the thermometer stem is inserted, and tightened into the well.

XC2 INSTALLATION

The XC2 variation meets the NSF/ANSI standard 2 protocol guidelines for non-exposed applications. Please refer to the NSF guidelines for certified installation instructions and approved materials.

VOGT POWER INTERNATIONAL
Delivered Work Day Planned
Workscan Footage | May-11-2017

CAUTION: *Thermowells should be used on all pressurized applications, to protect the thermometer from corrosion or physical damage, and to facilitate removal of the thermometer without disturbing the process.*

TESTING

Ashcroft Bimetal Dial Thermometers are carefully calibrated at the factory and under most operating conditions will retain their accuracy indefinitely. However, as in the case of all instruments, it is well to make periodic checks for accuracy against known standards.

ADJUSTMENT

If it is necessary to make an adjustment to the thermometer proceed as follows:

On thermometers fitted with an "External Adjustment" – Use a small wrench, small screwdriver or a coin to turn the slotted hexagon head in the back of the case until the pointer indicates the proper temperature on the dial.

MAINTENANCE OF DIAL THERMOMETERS

Aside from occasional testing, little or no maintenance is required.

Be sure that the gasketed glass cover is on the case at all times, as moisture and dirt inside the case will eventually cause the thermometer to lose its accuracy. (See caution note below.)

If the thermometer is used for measuring the temperature of a material that may harden and build up an insulating layer on the stem, the thermometer should be removed from the apparatus occasionally, and the stem cleaned. Observe this precaution to ensure the sensitivity of the instrument.

CAUTION:
Bimetal Thermometers operating below freezing must have a perfectly tight case to prevent entrance of moisture which eventually will condense and freeze inside the stem. This condition shows up as a failure of the thermometer to read accurately below 32°F or 0°C. For this reason it is imperative to avoid damage to the glass front while the stem temperature is at freezing or below. All thermometers are hermetically sealed in a dry atmosphere at the factory and require no further maintenance.

VOGT POWER INTERNATIONAL
V17491-CXE-321-01
08-May-2017

© 2007 Ashcroft Inc., 250 East Main Street, Stratford, CT 06614-5145, USA. No part of this publication may be reproduced or transmitted in any form or by any means, electronic or mechanical, including photocopying and recording, for any purpose, without the express written permission of Ashcroft Inc.

Project No.: V17491 / AMATA ABPR5 - PO#: V0010428

Bimetal Tagging

51HAH50CT501	52HAH50CT501	51HAC20CT501	52HAC20CT501
51HAC50CT501	52HAC50CT501	51LCQ10CT501	52LCQ10CT501

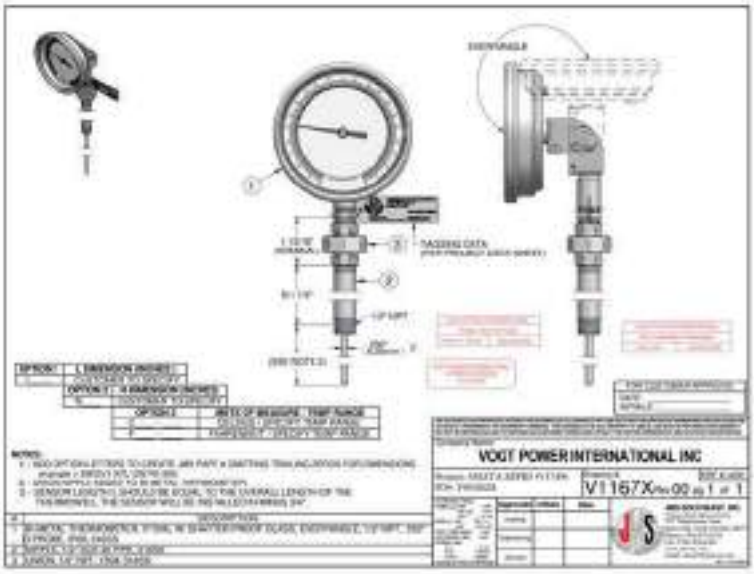

JMS Part Number	Case Diameter (L)	Stem Lg	Mnt	Temp Range	Tagging
[illegible]	6"	6"	1/2"	[illegible]	[illegible]

JMS SOUTHEAST INCORPORATED CERTIFIES THIS DRAWING IS IN ACCORDANCE WITH JMS SOUTHEAST INCORPORATED ENGINEERING SPECIFICATIONS AND ACCURATELY REPRESENTS THE EQUIPMENT FURNISHED. THIS DRAWING IS THE SOLE PROPERTY OF JMS SE, AND MUST BE RETURNED UPON DEMAND IF MAY NOT BE REPRODUCED NOR THE INFORMATION CONTAINED THEREIN USED WITHOUT THE WRITTEN PERMISSION OF JMS SOUTHEAST INCORPORATED

Company Name:

VOGT POWER INTERNATIONAL INC

Project: AMATA ABPR5 #V17491
PO#: V0010428

Drawing #: V1167 (TAGGING DATA)

ERF #: 4291

TOLERANCE TABLE:	
PROBE (L): 0-60"	±0.05"
61"-144"	-1"+0"
145" +	-2"+0"
WIRE (L): <72"	-0.25"+1/2"
>72"	-0.25"+1/2"
PROT. TUBE (PIN2):	±0.0"
FRACTIONAL DIM:	±0.0"
DECIMAL DIM:	
X.X	± 0.03"
X.XX	±0.010"
X.XXX	±0.005"
UNLESS STATED OTHERWISE	

Approvals	Initials	Date
Drafting		
Engineering		
Second		

JMS SOUTHEAST, INC.
Temperature Measurement
105 Temperature Lane
Statesville, North Carolina 28677
Phone: (704) 873-1835
Fax: (704) 878-6166
www.jms-se.com
Email: sensors@jms-se.com
REV. 4-10-2009

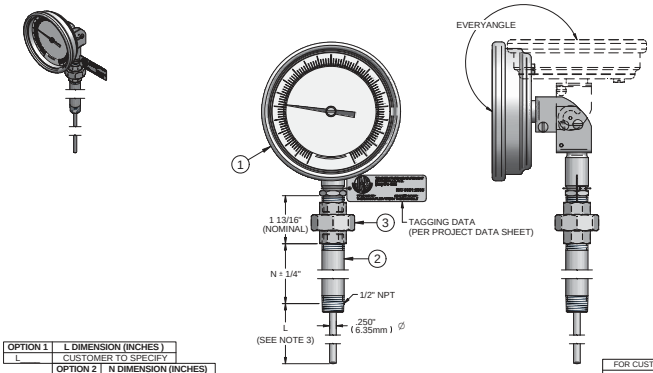

OPTION 1	L DIMENSION (INCHES)
L____	CUSTOMER TO SPECIFY

OPTION 2	N DIMENSION (INCHES)
N____	CUSTOMER TO SPECIFY

OPTION 3	UNITS OF MEASURE / TEMP RANGE
C____-____	CELSIUS / SPECIFY TEMP RANGE
F____-____	FAHRENHEIT / SPECIFY TEMP RANGE

FOR CUSTOMER APPROVAL
DATE:
INITIALS:

NOTES:
1) - ADD OPTION LETTERS TO CREATE JMS PART # OMITTING TRAILING ZEROS FOR DIMENSIONS.
example = DWGV1167L12N7F0-300
2) - UNION NIPPLE ADDED TO BI-METAL THERMOMETER.
3) - SENSOR LENGTH L SHOULD BE EQUAL TO THE OVERALL LENGTH OF THE THERMOWELL THE SENSOR WILL BE INSTALLED IN MINUS 3/4".

#	DESCRIPTION
1	BI-METAL THERMOMETER, 5" DIAL W/ SHATTER PROOF GLASS, EVERYANGLE, 1/2" NPT, .250" Ø PROBE, IP65, 316SS
2	NIPPLE, 1/2" SCH 40 PIPE, 316SS
3	UNION, 1/2" NPT, 150#, 316SS

JMS SOUTHEAST INCORPORATED CERTIFIES THIS DRAWING IS IN ACCORDANCE WITH JMS SOUTHEAST INCORPORATED ENGINEERING SPECIFICATIONS AND ACCURATELY REPRESENTS THE EQUIPMENT FURNISHED. THIS DRAWING IS THE SOLE PROPERTY OF JMS SE, AND MUST BE RETURNED UPON DEMAND IF MAY NOT BE REPRODUCED NOR THE INFORMATION CONTAINED THEREIN USED WITHOUT THE WRITTEN PERMISSION OF JMS SOUTHEAST INCORPORATED

Company Name:

VOGT POWER INTERNATIONAL INC

Project: AMATA ABPR5 #V17491
PO#: V0010428

Drawing #: V1167X Rev 00 pg 1 of 1

ERF #: 4291

TOLERANCE TABLE:
PROBE (L): 0-60" ±0.05"
61"-144" -1"+0"
145" + -2"+0"
WIRE (L): <72" -0.25"+1/2"
>72" -0.25"+1/2"
PROT. TUBE (PIN2): ±0.0"
FRACTIONAL DIM: ±0.0"
DECIMAL DIM:
X.X ± 0.03"
X.XX ±0.010"
X.XXX ±0.005"
UNLESS STATED OTHERWISE

Approvals | Initials | Date
Drafting
Engineering
Second

JMS SOUTHEAST, INC.
Temperature Measurement
105 Temperature Lane
Statesville, North Carolina 28677
Phone: (704) 873-1835
Fax: (704) 878-6166
www.jms-se.com
Email: sensors@jms-se.com
REV. 4-10-2009

JMS Part Number	Case Diameter (L)	Stem Lg	Mnt	Temp Range	Tagging
[illegible]	5"	6"	1/2"	[illegible]	[illegible]

JMS SOUTHEAST INCORPORATED CERTIFIES THIS DRAWING IS IN ACCORDANCE WITH JMS SOUTHEAST INCORPORATED ENGINEERING SPECIFICATIONS AND ACCURATELY REPRESENTS THE EQUIPMENT FURNISHED. THIS DRAWING IS THE SOLE PROPERTY OF JMS SE, AND MUST BE RETURNED UPON DEMAND IF MAY NOT BE REPRODUCED NOR THE INFORMATION CONTAINED THEREIN USED WITHOUT THE WRITTEN PERMISSION OF JMS SOUTHEAST INCORPORATED

Company Name:

VOGT POWER INTERNATIONAL INC

Project: AMATA ABPR5 #V17491
PO#: V0010428

Drawing #: V1167 (TAGGING DATA)

ERF #: 4291

TOLERANCE TABLE:
PROBE (L): 0-60" ±0.05"
61"-144" -1"+0"
145" + -2"+0"
WIRE (L): <72" -0.25"+1/2"
>72" -0.25"+1/2"
PROT. TUBE (PIN2): ±0.0"
FRACTIONAL DIM: ±0.0"
DECIMAL DIM:
X.X ± 0.03"
X.XX ±0.010"
X.XXX ±0.005"
UNLESS STATED OTHERWISE

Approvals | Initials | Date
Drafting
Engineering
Second

JMS SOUTHEAST, INC.
Temperature Measurement
105 Temperature Lane
Statesville, North Carolina 28677
Phone: (704) 873-1835
Fax: (704) 878-6166
www.jms-se.com
Email: sensors@jms-se.com
REV. 4-10-2009

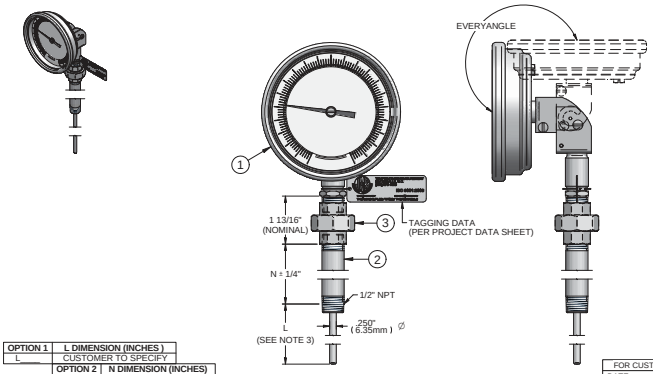

OPTION 1	L DIMENSION (INCHES)
L____	CUSTOMER TO SPECIFY

OPTION 2	N DIMENSION (INCHES)
N____	CUSTOMER TO SPECIFY

OPTION 3	UNITS OF MEASURE / TEMP RANGE
C____-____	CELSIUS / SPECIFY TEMP RANGE
F____-____	FAHRENHEIT / SPECIFY TEMP RANGE

FOR CUSTOMER APPROVAL
DATE:
INITIALS:

NOTES:
1) - ADD OPTION LETTERS TO CREATE JMS PART # OMITTING TRAILING ZEROS FOR DIMENSIONS.
example = DWGV1167L12N7F0-300
2) - UNION NIPPLE ADDED TO BI-METAL THERMOMETER.
3) - SENSOR LENGTH L SHOULD BE EQUAL TO THE OVERALL LENGTH OF THE THERMOWELL THE SENSOR WILL BE INSTALLED IN MINUS 3/4".

#	DESCRIPTION
1	BI-METAL THERMOMETER, 5" DIAL W/ SHATTER PROOF GLASS, EVERYANGLE, 1/2" NPT, .250" Ø PROBE, IP65, 316SS
2	NIPPLE, 1/2" SCH 40 PIPE, 316SS
3	UNION, 1/2" NPT, 150#, 316SS

JMS SOUTHEAST INCORPORATED CERTIFIES THIS DRAWING IS IN ACCORDANCE WITH JMS SOUTHEAST INCORPORATED ENGINEERING SPECIFICATIONS AND ACCURATELY REPRESENTS THE EQUIPMENT FURNISHED. THIS DRAWING IS THE SOLE PROPERTY OF JMS SE, AND MUST BE RETURNED UPON DEMAND IF MAY NOT BE REPRODUCED NOR THE INFORMATION CONTAINED THEREIN USED WITHOUT THE WRITTEN PERMISSION OF JMS SOUTHEAST INCORPORATED

Company Name:

VOGT POWER INTERNATIONAL INC

Project: AMATA ABPR5 #V17491
PO#: V0010428

Drawing #: V1167X Rev 00 pg 1 of 1

ERF #: 4291

TOLERANCE TABLE:
PROBE (L): 0-60" ±0.05"
61"-144" -1"+0"
145" + -2"+0"
WIRE (L): <72" -0.25"+1/2"
>72" -0.25"+1/2"
PROT. TUBE (PIN2): ±0.0"
FRACTIONAL DIM: ±0.0"
DECIMAL DIM:
X.X ± 0.03"
X.XX ±0.010"
X.XXX ±0.005"
UNLESS STATED OTHERWISE

Approvals | Initials | Date
Drafting
Engineering
Second

JMS SOUTHEAST, INC.
Temperature Measurement
105 Temperature Lane
Statesville, North Carolina 28677
Phone: (704) 873-1835
Fax: (704) 878-6166
www.jms-se.com
Email: sensors@jms-se.com
REV. 4-10-2009

JMS Part Number	Case Diameter (1)	Stem (2)	N	Temp Range	Tagging
[illegible]	[illegible]	[illegible]	[illegible]	[illegible]	[illegible]

JMS SOUTHEAST INCORPORATED CERTIFIES THIS DRAWING IS IN ACCORDANCE WITH JMS SOUTHEAST INCORPORATED ENGINEERING SPECIFICATIONS AND ACCURATELY REPRESENTS THE EQUIPMENT FURNISHED. THIS DRAWING IS THE SOLE PROPERTY OF JMS SE, AND MUST BE RETURNED UPON DEMAND IF NOT USED. NOT BE REPRODUCED NOR THE INFORMATION CONTAINED THEREIN USED WITHOUT THE WRITTEN PERMISSION OF JMS SOUTHEAST INCORPORATED

Company Name:

VOGT POWER INTERNATIONAL INC

Project: AMATA ABPR5 #V17491
PO#: V0010428

Drawing #: V1167 (TAGGING DATA)

ERF #: 4291

TOLERANCE TABLE
PROBE (L) 0-60" ±60"
61"-120" ±1/16"
121" + ±1/8"
WIRE (L) <12" ±12" +1/4"
>12" ±2" +1/4"
PROT. TUBE (PNL) ±60"
FRACTIONAL DIM ±60"
DECIMAL DIM
X.X ± 0.03"
X.XX ± 0.01"
X.XXX ± 0.005"
UNLESS STATED OTHERWISE

Approvals	Initials	Date
Drafting		
Engineering		
Second		

JMS SOUTHEAST, INC.
Temperature Measurement
105 Temperature Lane
Statesville, North Carolina 28677
Phone: (704) 873-1835
Fax: (704) 878-6166
www.jms-se.com
Email: sensors@jms-se.com

REV. 4-10-2009

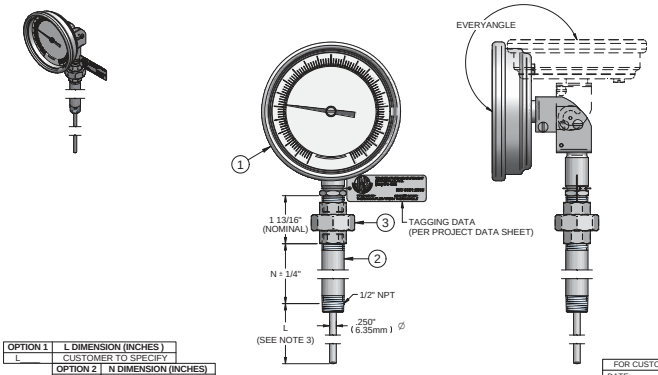

OPTION 1	L DIMENSION (INCHES)
L_____	CUSTOMER TO SPECIFY

OPTION 2	N DIMENSION (INCHES)
N	CUSTOMER TO SPECIFY

OPTION 3	UNITS OF MEASURE / TEMP RANGE
C _____	CELSIUS / SPECIFY TEMP RANGE
F _____	FAHRENHEIT / SPECIFY TEMP RANGE

FOR CUSTOMER APPROVAL
DATE:_____
INITIALS:_____

NOTES:
1) - ADD OPTION LETTERS TO CREATE JMS PART # OMITTING TRAILING ZEROS FOR DIMENSIONS.
example = DWGV1167L12N7F0-300
2) - UNION NIPPLE ADDED TO BI-METAL THERMOMETER.
3) - SENSOR LENGTH L SHOULD BE EQUAL TO THE OVERALL LENGTH OF THE THERMOWELL THE SENSOR WILL BE INSTALLED IN MINUS 3/4".

#	DESCRIPTION
1	BI-METAL THERMOMETER, 5" DIAL W/ SHATTER PROOF GLASS, EVERYANGLE, 1/2" NPT, .250" Ø PROBE, IP65, 316SS
2	NIPPLE, 1/2" SCH 40 PIPE, 316SS
3	UNION, 1/2" NPT, 150#, 316SS

JMS SOUTHEAST INCORPORATED CERTIFIES THIS DRAWING IS IN ACCORDANCE WITH JMS SOUTHEAST INCORPORATED ENGINEERING SPECIFICATIONS AND ACCURATELY REPRESENTS THE EQUIPMENT FURNISHED. THIS DRAWING IS THE SOLE PROPERTY OF JMS SE, AND MUST BE RETURNED UPON DEMAND IF NOT USED. NOT BE REPRODUCED NOR THE INFORMATION CONTAINED THEREIN USED WITHOUT THE WRITTEN PERMISSION OF JMS SOUTHEAST INCORPORATED

Company Name:

VOGT POWER INTERNATIONAL INC

Project: AMATA ABPR5 #V17491
PO#: V0010428

Drawing #: V1167X Rev 00 pg 1 of 1

ERF #: 4291

TOLERANCE TABLE
PROBE (L) 0-60" ±60"
61"-120" ±1/16"
121" + ±1/8"
WIRE (L) <12" ±12" +1/4"
>12" ±2" +1/4"
PROT. TUBE (PNL) ±60"
FRACTIONAL DIM ±60"
DECIMAL DIM
X.X ± 0.03"
X.XX ± 0.01"
X.XXX ± 0.005"
UNLESS STATED OTHERWISE

Approvals	Initials	Date
Drafting		
Engineering		
Second		

JMS SOUTHEAST, INC.
Temperature Measurement
105 Temperature Lane
Statesville, North Carolina 28677
Phone: (704) 873-1835
Fax: (704) 878-6166
www.jms-se.com
Email: sensors@jms-se.com

REV. 4-10-2009

JMS Part Number	Case Diameter (1)	Stem (2)	N	Temp Range	Tagging
[illegible]	[illegible]	[illegible]	[illegible]	[illegible]	[illegible]

JMS SOUTHEAST INCORPORATED CERTIFIES THIS DRAWING IS IN ACCORDANCE WITH JMS SOUTHEAST INCORPORATED ENGINEERING SPECIFICATIONS AND ACCURATELY REPRESENTS THE EQUIPMENT FURNISHED. THIS DRAWING IS THE SOLE PROPERTY OF JMS SE, AND MUST BE RETURNED UPON DEMAND IF NOT USED. NOT BE REPRODUCED NOR THE INFORMATION CONTAINED THEREIN USED WITHOUT THE WRITTEN PERMISSION OF JMS SOUTHEAST INCORPORATED

Company Name:

VOGT POWER INTERNATIONAL INC

Project: AMATA ABPR5 #V17491
PO#: V0010428

Drawing #: V1167 (TAGGING DATA)

ERF #: 4291

TOLERANCE TABLE
PROBE (L) 0-60" ±60"
61"-120" ±1/16"
121" + ±1/8"
WIRE (L) <12" ±12" +1/4"
>12" ±2" +1/4"
PROT. TUBE (PNL) ±60"
FRACTIONAL DIM ±60"
DECIMAL DIM
X.X ± 0.03"
X.XX ± 0.01"
X.XXX ± 0.005"
UNLESS STATED OTHERWISE

Approvals	Initials	Date
Drafting		
Engineering		
Second		

JMS SOUTHEAST, INC.
Temperature Measurement
105 Temperature Lane
Statesville, North Carolina 28677
Phone: (704) 873-1835
Fax: (704) 878-6166
www.jms-se.com
Email: sensors@jms-se.com

REV. 4-10-2009

SDOCIII

DURATEMP® GAS ACTUATED THERMOMETERS, INSTALLATION AND USE INFORMATION

ASHCROFT

INSTALLATION OF REMOTE READING THERMOMETERS

The case of the thermometer should be mounted at a location where it can be read conveniently. The maximum case temperature should not exceed 160°F (70°C). The capillary line also should be laid so that it will not be exposed to extreme temperatures, such as alongside steam pipes, ovens or other heated surfaces.

The minimum capillary line radius is 1". Place it so that it will be protected from damage. Should the capillary line be too long, coil the surplus neatly at a convenient point but **"DO NOT CUT IT"**

The thermometer system (Bourdon spring, capillary line and temperature sensing bulb) must not, under any circumstances be taken apart, or the capillary line cut.

INSTALLATION OF TEMPERATURE SENSING BULB IN THERMOWELL— (note: a ¾" bore thermowell is required— adapters are available to permit installation in larger bore thermowells.)

1. Install thermowell.
2. Assemble union connector to temperature sensing bulb finger tight.
3. Apply heat conducting mixture to temperature sensing bulb of thermometer (50/50 mix of glycerin and graphite, or Vaseline.)
4. Insert temperature sensing bulb into thermowell and hold against bottom of thermowell.
5. Assemble union connector to thermowell.
6. Tighten jam nut to union to lock temperature sensing bulb in position, normal tightening is ½ to 1 turn from finger tight.

Where service temperatures exceed 350°F (177°C) the heat conducting medium may smoke when first subjected to a high temperature. This is caused by the vehicle, in the heat conducting medium, vaporizing and leaving the dry solids behind. This should not be cause for alarm. The dry solids will act equally well as a heat conducting medium for temperatures up to 1200°F (650°C).

TESTING

Every ASHCROFT DURATEMP thermometer is carefully calibrated at the factory and under normal operating conditions it will remain accurate. It is necessary to test the thermometer the following procedure should be used:

Immerse the entire sensitive part of the temperature sensing bulb side by side with a test thermometer of known accuracy in a liquid bath which is being stirred vigorously and in which the temperature is maintained constant for several minutes before readings are taken.

Never attempt to test thermometers in air. Air is a poor conductor of heat and there is always the danger of cold currents influencing the thermometer reading.

TO CHANGE THE INDICATED TEMPERATURE READING

1. Remove the window.
2. Hold the hub of the pointer stationary. Use a slotted screwdriver for 4½" and 6½" cases, grasp the knurl of the 6" pointer hub.
3. Hold pointer in other hand between thumb and forefinger so that torque can be applied to move pointer.
4. Establish reference temperature and rotate pointer required amount for most accurate reading.
5. Replace the window.

INSTALLATION OF DIRECT READING THERMOMETERS

POSITIONING THE SYSTEM

Before installation, the stem should be set to the desired angle as follows:

1. Loosen the four screws labeled "A" and "B" in Figure until the harness rotates freely without twisting the flexible housing.
2. While holding the case, rotate the harness clockwise or counterclockwise as indicated by the arrows in Figure to place the harness in a position that will permit flexing the stem in the desired direction with respect to the case, then lock the two screws labeled "A."
3. Flex the stem to the desired angle with respect to the face of the thermometer as shown in Figure, then lock the screws labeled "B."

INSTALLATION

1. The thermometer is normally provided with a threaded connection. To tighten the thermometer to the apparatus or into a thermowell, use an open end wrench applied to the hexagon head of the threaded connection. Turn until reasonably tight, then tighten still further in the same manner as a pipe fitting until the scale is in the desired position for reading. **"DO NOT TIGHTEN BY TURNING THE THERMOMETER CASE."**
2. Insert the thermometer into the threaded connection and turn the compression nut until reasonably tight, then tighten still further in the same manner as a pipe fitting.

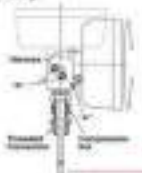

TERMOMETROS DURATEMP® ACCIONADOS POR GAS, INFORMACION SOBRE SU INSTALACION Y USO

ASHCROFT®

INSTALACION DE TERMOMETROS DE LECTURA REMOTA

La caja del termómetro debe instalarse en un lugar donde pueda leerse convenientemente. La máxima temperatura de la caja no debe exceder de 70°C (160°F). La línea capilar también debe ser tendida de modo que no quede expuesta a temperaturas extremas, como sucedería si se colocara a lo largo de tuberías de vapor, hornos u otras superficies calentadas.

El radio mínimo de la línea capilar es de 25,4 mm (1 pulgada). Colóquese de modo que quede protegida contra daños. Si la línea capilar fuera demasiado larga, enrolle el material sobrante ordenadamente en un punto conveniente pero **"NO LO CORTE"**.

El sistema del termómetro (el bulbo sensor de temperatura, la línea capilar y el resorte de Bourdon) no debe desarmarse, ni la línea capilar debe cortarse, en ningunas circunstancias.

INSTALACION DEL BULBO SENSOR DE TEMPERATURA EN UNA TERMOVAINA — (nota: se requiere una termovaina con un diámetro interior de 9,5 mm (3/8˝) —hay adaptadores que permiten la instalación en termovainas de mayor calibre interno).

1. Instale la termovaina.
2. Ensamble la conexión de la unión con el bulbo sensor de temperatura apretándola con los dedos.
3. Aplique un medio conductor de calor al bulbo sensor de temperatura del termómetro (una mezcla 50/50 de glicerina y grafito, o vaselina).
4. Introduzca el bulbo sensor de temperatura en la termovaina y sosténgalo contra la parte inferior del mismo.
5. Ensamble la conexión de la unión a la termovaina.
6. Apriete la tuerca de sujeción contra la unión para asegurar el bulbo sensor de temperatura en su lugar; el apretamiento normal es de 3/4 a 1 vuelta a partir del lugar donde quede apretado con los dedos.

Donde las temperaturas de servicio sean superiores a los 177°C (350°F) el medio conductor de calor podría despedir humo cuando sea expuesto por primera vez a una alta temperatura. Esto es causado por el vehículo, contenido en el medio conductor de calor, al evaporarse y dejando atrás los sólidos secos. Esto no debe ser causa de alarma. Los sólidos secos actuarán igualmente bien como medio conductor de calor para temperaturas de hasta 650°C (1200°F).

PRUEBAS

Cada termómetro ASHCROFT DURATEMP es calibrado cuidadosamente en la fábrica y en condiciones normales de trabajo seguirá siendo exacto. Si fuera necesario probar el termómetro, debe emplearse el siguiente procedimiento:

Sumerja toda la parte sensible del bulbo sensor de temperatura junto con un termómetro de prueba de exactitud conocida en un baño líquido que esté siendo agitado vigorosamente y en donde la temperatura se mantenga constante durante varios minutos antes de tomar las lecturas.

Nunca debe intentarse probar termómetros en el aire. El aire es un mal conductor del calor y siempre existe el peligro de que las corrientes frías afecten la lectura del termómetro.

PARA MODIFICAR LA LECTURA INDICADA DE TEMPERATURA

1. Saque el visor.
2. Sostenga fijo el cubo central de la aguja indicadora. Utilice un destornillador para cabezas ranuradas para las cajas de 114 mm (4½˝) 216 mm y (8½˝); agarre la parte moleteada del cubo central de la aguja indicadora de 150 mm (6˝).
3. Sostenga la aguja indicadora en la otra mano entre el pulgar y el índice de modo que pueda aplicarse fuerza de torsión para mover la aguja indicadora.
4. Establezca la temperatura de referencia y gire la aguja indicadora la cantidad requerida para obtener la lectura más exacta posible.
5. Vuelva a colocar el visor en su lugar.

INSTALACION DE TERMOMETROS DE LECTURA DIRECTA

POSICIONAMIENTO DEL SISTEMA

Antes de la instalación, el vástago debe colocarse en el ángulo deseado de la siguiente manera:

1. Afloje los seis tornillos rotulados "A" y "B" en la Figura hasta que el arnés gire libremente sin torcer el cascarón flexible.
2. Mientras sostiene la caja, gire el arnés en la misma dirección de las manecillas del reloj o en dirección contraria a las manecillas del reloj según lo indican las flechas en la Figura para colocar el arnés en una posición que permita flexionar el vástago en la dirección deseada respecto a la caja; luego, asegure los dos tornillos rotulados "A".
3. Flexione el vástago al ángulo deseado respecto a la carátula del termómetro como se indica en la Figura; luego, asegure los tornillos rotulados "B".

INSTALACION

1. El termómetro normalmente se proporciona con una conexión roscada. Para apretar el termómetro en el aparato o dentro de una termovaina, utilice una llave de boca aplicada a la cabeza hexagonal de la conexión roscada. Gire la conexión hasta que esté razonablemente apretada; luego, apriétela todavía más de la misma manera que una conexión de tubería hasta que la escala se encuentre en la posición deseada para lectura. **"NO APRETAR HACIENDO GIRAR LA CAJA DEL TERMOMETRO"**.
2. Introduzca el termómetro en la conexión roscada y gire la tuerca de compresión hasta que esté razonablemente apretada; luego, apriete todavía más en la misma manera que una conexión de tubería.

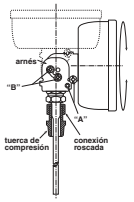

ASHCROFT INC.
250 EAST MAIN ST.
STRATFORD, CT 06614-5145
TEL: 203-378-8281 • FAX: 203-385-0408
EMAIL: INFO@ASHCROFT.COM

www.ashcroft.com
I&M008-10067-2/01(250-2199R3) 4/06
© Ashcroft Inc. All sales subject to standard terms and conditions of sale. Printed in U.S.A.

THERMOMÈTRES À GAZ DURATEMP®, CONSIGNES D'INSTALLATION ET D'UTILISATION

ASHCROFT®

INSTALLATION DES THERMOMÈTRES À LECTURE À DISTANCE

Le boîtier du thermomètre doit être monté là où il peut être lu commodément. La température maximum du boîtier ne doit pas dépasser 70°C (160°F). En outre, la ligne capillaire doit être disposée de manière à ce qu'elle ne soit pas exposée aux températures extrêmes, comme le long des tuyaux de vapeur, des fours ou autres surfaces chauffées.

Le rayon minimal de la ligne capillaire est de 25,4 mm (1 po). Elle doit être placée de manière à être protégée contre les dommages. Si la ligne capillaire est trop longue, enrouler le surplus proprement à un point commode mais « **NE PAS LA COUPER ».**

Le système de thermomètre (ressort de Bourdon, ligne capillaire et bulbe de détection de température) ne doit, en aucune circonstance, être démonté, ni la ligne capillaire coupée.

INSTALLATION DU BULBE DE DÉTECTION DE TEMPÉRATURE DANS UN PUITS THERMOMÉTRIQUE — (remarque : un puits thermométrique à calibre de 9,5mm (3/8 po) est requis — des adaptateurs sont disponibles pour permettre l'installation dans les puits thermométrique de plus gros calibre.)

1. Installer le puits thermométrique.
2. Monter le raccord sur le bulbe de détection de température en serrant à la main.
3. Appliquer le milieu thermoconducteur au bulbe de détection de température du thermomètre (mélange 50/50 de glycérine et de graphite, ou de Vaseline).
4. Insérer le bulbe de détection de température dans le puits thermométrique et tenir contre le fond du puits thermométrique.
5. Monter le raccord au puits thermométrique.
6. Serrer le contre-écrou au raccord de manière à bloquer le bulbe de détection de température en place, un serrage normal est de 3/4 à 1 tour depuis le serrage à la main.

Lorsque les températures de service dépassent 177°C (350°F), il se peut que le milieu thermoconducteur dégage de la fumée lorsqu'il est soumis pour la première fois à une température élevée. Ce dégagement de fumée est causé par le véhicule, dans le milieu thermoconducteur, qui vaporise et laisse les solides secs derrière. Il n'y a pas lieu de s'inquiéter. Les solides secs seront tout aussi efficaces comme milieu thermoconducteur pour les températures allant jusqu'à 650°C (1200°F).

ESSAIS

Chaque thermomètre ASHCROFT DURATEMP est étalonné avec soin à l'usine et il demeurera exact dans des conditions normales de service. S'il est nécessaire de faire l'essai du thermomètre, procéder de la façon suivante :

Immerger toute la partie sensible du bulbe de détection de température à côté d'un thermomètre d'essai d'une exactitude connue dans un bain liquide qui est remué énergiquement et dans lequel la température est maintenue constante pendant quelques minutes avant que des relevés ne soient effectués.

Ne jamais tenter de faire l'essai de thermomètres dans l'air. L'air est un mauvais conducteur de chaleur et il y a toujours le risque que des courants froids n'influent sur le relevé du thermomètre.

POUR MODIFIER LE RELEVÉ DE TEMPÉRATURE INDIQUÉ

1. Enlever la fenêtre.
2. Tenir le moyeu de l'aiguille fixe. Utiliser un tournevis pour écrous à fente sur les boîtiers de 114 mm (4½ po) et de 216 mm (8½ po), saisir la molette du moyeu de l'aiguille de 150 mm (6 po).
3. Tenir l'aiguille de l'autre main entre le pouce et l'index de manière à pouvoir appliquer un couple pour déplacer l'aiguille.
4. Établir la température de référence et tourner l'aiguille du niveau nécessaire en vue du relevé le plus exact.
5. Remettre la fenêtre en place.

INSTALLATION DES THERMOMÈTRES À LECTURE DIRECTE

POSITIONNEMENT DU SYSTÈME

Avant l'installation, la tige doit être placée à l'angle désiré, comme suit :

1. Desserrer les six vis marquées « A » et « B » dans la Figure jusqu'à ce que le harnais tourne librement sans tordre le boîtier flexible.
2. Tout en tenant le boîtier, faire tourner le harnais en sens horaire ou anti-horaire, comme indiqué par les flèches de la Figure, en vue de placer le harnais à une position qui permettra le fléchissement de la tige dans la direction désirée par rapport au boîtier, puis bloquer les deux vis marquées « A ».
3. Fléchir la tige à l'angle désiré par rapport au devant du thermomètre comme illustré dans la Figure, puis bloquer les vis marquées « B ».

INSTALLATION

1. Le thermomètre est fourni normalement avec un raccord fileté. Pour serrer le thermomètre à l'appareil ou dans un puits thermométrique, utiliser une clé à molette appliquée sur la tête hexagonale du raccord fileté. Tourner jusqu'à ce que raisonnablement serré, puis serrer encore davantage de la même manière qu'un raccord de tuyau jusqu'à ce que l'échelle soit à la position désirée pour la lecture. « **NE PAS SERRER EN TOURNANT LE BOÎTIER DU THERMOMÈTRE.** »
2. Insérer le thermomètre dans le raccord fileté et tourner l'écrou de compression jusqu'à ce qu'il soit raisonnablement serré, puis serrer davantage de la même manière qu'un raccord de tuyau.

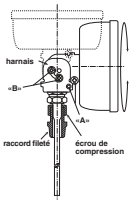

ASHCROFT INC.
250 EAST MAIN ST.
STRATFORD, CT 06614-5145
TEL: 203-378-8281 • FAX: 203-385-0408
EMAIL: INFO@ASHCROFT.COM

www.ashcroft.com
I&M008-10067-2/01(250-2199R3) 4/06
© Ashcroft Inc. All sales subject to standard terms and conditions of sale. Printed in U.S.A.

DURATEMP® GASTHERMOMETER EINBAU- UND GEBRAUCHSANWEISUNG

ASHCROFT®

EINBAU VON THERMOMETERN MIT ABGESETZTER MESSWERTANZEIGE

Das Thermometergehäuse sollte an einer Stelle montiert werden, an der das Instrument problemlos abgelesen werden kann. Die Gehäusetemperatur sollte nicht mehr als 70 °C (160 °F) betragen. Auch die kapillare Meßleitung sollte so verlegt werden, daß sie keinen extremen Temperaturen ausgesetzt ist; Dampfrohre, Öfen und andere Wärme abstrahlende Flächen sind zu meiden.

Der minimale Platzbedarf der kapillaren Meßleitung beträgt 25,4 mm (1˝) im Radius. Die Meßleitung muß so verlegt werden, daß sie nicht beschädigt werden kann. Sollte die Meßleitung zu lang sein, kann die Überlänge an einer geeigneten Stelle spiralförmig aufgerollt werden, darf aber **NICHT DURCHGESCHNITTEN WERDEN!**

Unter keinen Umständen darf das Thermometersystem (Bourdonfeder, Meßleitung und Meßfühler) auseinandergenommen oder die Leitung durchschnitten werden.

INSTALLIEREN DES MESSFÜHLERS IM THERMOMETERSCHACHT (Bitte beachten: Die Bohrung des Thermometerschachts muß mindestens 9,5 mm (3/8˝) betragen. Für eine Installation in größeren Thermometerschächten kann ein Adapter bezogen werden.)

1. Thermometerschacht installieren.
2. Das Anschlußstück am Meßfühler anbringen und von Hand festziehen.
3. Eine wärmeleitende Masse (Mischung aus Glyzerin und Graphit zu gleichen Teilen oder Vaseline) auf den Meßfühler auftragen.
4. Den Meßfühler in den Schacht einführen und gegen den Boden des Schachts halten.
5. Die Anschlußeinheit am Thermometerschacht anbringen.
6. Den Meßfühler durch Anziehen der Kontermutter arretieren. Das normale Drehmoment entspricht etwa 3/4 bis 1 Umdrehung, nachdem das Anschlußstück von Hand angezogen wurde.

Sollte die Betriebstemperatur bei der ersten Wärmeeinwirkung 177 °C (350 °F) übersteigen, kann die wärmeleitende Masse Rauch entwickeln. Dieser Rauch entsteht durch das Verdampfen der Trägersubstanz der wärmeleitenden Masse, die nur die festen Bestandteile zurückläßt. Dies ist jedoch kein Anlaß zur Besorgnis. Die festen Rückstände bilden ebenfalls einen guten Wärmeleiter für Temperaturen bis 650 °C (1200 °F).

TESTEN

Jedes ASHCROFT DURATEMP-Thermometer wurde im Werk sorgsam kalibriert und funktioniert unter normalen Arbeitsbedingungen einwandfrei. Sollte sich ein Thermometertest als erforderlich erweisen, empfiehlt sich folgendes Verfahren:

Den gesamten Fühlerteil des Thermometers und ein Thermometer mit bekannter Genauigkeit nebeneinander in eine Flüssigkeit tauchen, die dabei stetig umgerührt wird. Die Temperatur des Bads mehrere Minuten lang konstant halten, und die Meßwerte ablesen.

Ein Thermometertest in Luft ist ungenau, da Luft ein schlechter Wärmeleiter ist, und da stets die Gefahr eines Luftzuges besteht, der die Genauigkeit des Thermometers beeinträchtigt.

EINSTELLEN DES ANGEZEIGTEN TEMPERATURMESSWERTS

1. Sichtglas entfernen.
2. Anzeigenadel festhalten. Bei den Gehäusegrößen 114 mm (4½˝) und 216 mm (8½˝) einem Flachklingen-Schraubenzieher verwenden; bei dem 150 mm-(6˝)-Gehäuse die Rändelschraube anfassen.
3. Die Nadel mit Daumen und Zeigefinger der anderen Hand so anfassen, daß sie gedreht werden kann.
4. Mit Hilfe einer vorbereiteten Referenztemperatur die Anzeigenadel auf die angezeigte Temperatur bringen.
5. Sichtglas wieder anbringen.

EINBAU VON THERMOMETERN MIT DIREKTER MESSWERTANZEIGE

AUSRICHTEN DES SYSTEMS

Vor der Installation sollte der Schaft folgendermaßen auf den gewünschten Winkel eingestellt werden:

1. Die sechs in der Abbildung mit „A" und „B" markierten Schrauben lockern, so daß die Halterung frei drehbar ist. Nicht mit dem Gehäuse eindrehen.
2. Das Gehäuse festhalten, und die Halterung durch Drehen im oder entgegen dem Uhrzeigersinn (siehe Abbildung) in eine Stellung bringen, in der der Schaft in die gewünschte Stellung zum Gehäuse geschwenkt werden kann. Die beiden Schrauben „A" wieder festziehen.
3. Den Schaft in die gewünschte Stellung zur Thermometerskala bringen (siehe Abbildung). Die Schrauben „B" festziehen.

INSTALLATION

1. In der Standardausführung hat das Thermometer eine Schraubarmatur. Bei der Montage des Thermometers an einer Anlage bzw. in einem Thermometerschacht wird der Sechskantkopf der Schraubarmatur mit einem Gabelschlüssel angezogen. Die Armatur zunächst etwas anziehen und dann wie eine gewöhnliche Rohrarmatur so weit festziehen, daß die Skala bequem abgelesen werden kann. **NICHT DURCH DREHEN DES THERMOMETERGEHÄUSES FESTZIEHEN!**
2. Das Thermometer in den Schraubanschluß einführen, und die Kegelringmutter etwas anziehen. Dann nach Art einer Rohrarmatur festziehen.

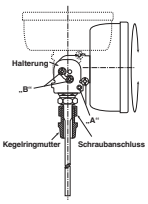

ASHCROFT INC.
250 EAST MAIN ST.
STRATFORD, CT 06614-5145
TEL: 203-378-8281 • FAX: 203-385-0408
EMAIL: INFO@ASHCROFT.COM

www.ashcroft.com
I&M008-10067-2/01(250-2199R3) 4/06
© Ashcroft Inc. All sales subject to standard terms and conditions of sale. Printed in U.S.A.

Project No.: V17491 / AMATA ABPR5 - PO#: V0010428

Gas Actuated Therometer Tagging

51HAH10CT501, 52HAH10CT501

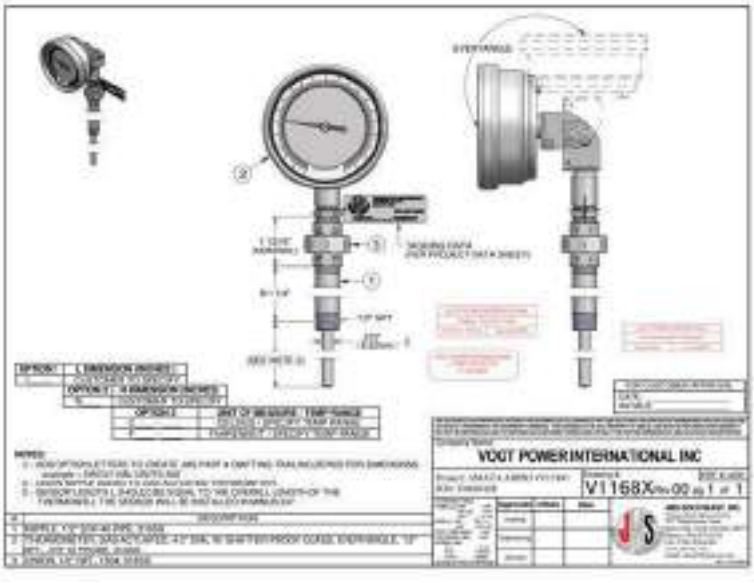

JMS Part Number	Case Diameter (J)	Stem (L)	Dia	Temp Range	Tagging
[illegible]	[illegible]	[illegible]	[illegible]	[illegible]	[illegible]

JMS SOUTHEAST INCORPORATED CERTIFIES THIS DRAWING IS IN ACCORDANCE WITH JMS SOUTHEAST INCORPORATED ENGINEERING SPECIFICATIONS AND ACCURATELY REPRESENTS THE EQUIPMENT PURCHASED. THIS DRAWING IS THE SOLE PROPERTY OF JMS SE, AND MUST BE RETURNED UPON REQUEST IF MAY NOT BE REPRODUCED NOR THE INFORMATION CONTAINED THEREIN USED WITHOUT THE WRITTEN PERMISSION OF JMS SOUTHEAST INCORPORATED

Company Name:

VOGT POWER INTERNATIONAL INC

Project: AMATA ABPR5 #V17491
PO#: V0010428

Drawing #: ERF #: 4291
V1168 (TAGGING DATA)

TOLERANCE TABLE
PROBE (L) 0-60" ±0.0"
61" - 120" -1" / +2"
WIRE (L) -0.0" -1" / +2"
>120" -2" / +4"
PROT. TUBE (PRO) ±0.0"
FRACTIONAL DIM ±0.0"
DECIMAL DIM
X.X ± 0.10"
X.XX ± 0.05"
X.XXX ± 0.030"
UNLESS STATED OTHERWISE

Approvals	Initials	Date
Drafting		
Engineering		
Second		

JMS SOUTHEAST, INC.
Temperature Measurement
105 Temperature Lane
Statesville, North Carolina 28677
Phone: (704) 873-1835
Fax: (704) 878-6166
www.jms-se.com
Email: sensors@jms-se.com

REV. A 10-2009

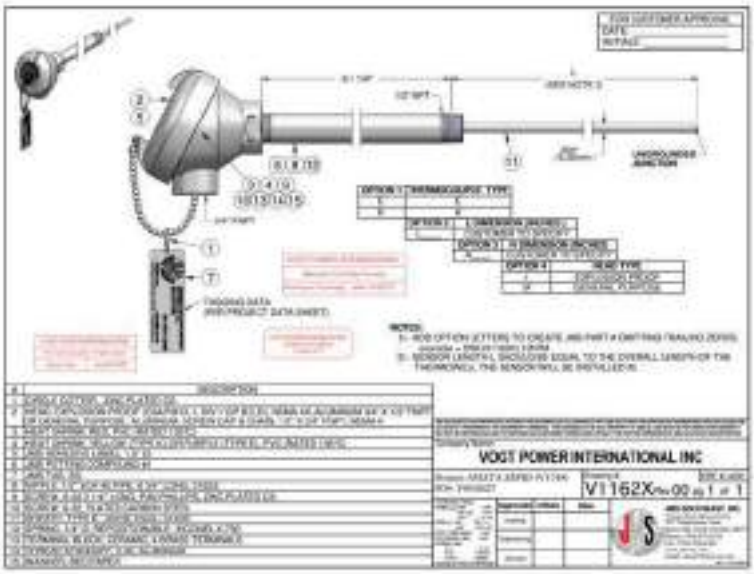

JMS Part Number	T/C Type	L/P	Dia	Head Type	Tagging
[illegible]	[illegible]	[illegible]	[illegible]	[illegible]	[illegible]

JMS SOUTHEAST INCORPORATED CERTIFIES THIS DRAWING IS IN ACCORDANCE WITH JMS SOUTHEAST INCORPORATED ENGINEERING SPECIFICATIONS AND ACCURATELY REPRESENTS THE EQUIPMENT PURCHASED. THIS DRAWING IS THE SOLE PROPERTY OF JMS SE, AND MUST BE RETURNED UPON REQUEST IF MAY NOT BE REPRODUCED NOR THE INFORMATION CONTAINED THEREIN USED WITHOUT THE WRITTEN PERMISSION OF JMS SOUTHEAST INCORPORATED

Company Name:

VOGT POWER INTERNATIONAL INC

Project: AMATA ABPR5 #V17491
PO#: V0010427

Drawing #: ERF #: 4291
V1162 (TAGGING DATA)

TOLERANCE TABLE
PROBE (L) 0-60" ±0.0"
61" - 120" -1" / +2"
WIRE (L) -0.0" -1" / +2"
>120" -2" / +4"
PROT. TUBE (PRO) ±0.0"
FRACTIONAL DIM ±0.0"
DECIMAL DIM
X.X ± 0.10"
X.XX ± 0.05"
X.XXX ± 0.030"
UNLESS STATED OTHERWISE

Approvals	Initials	Date
Drafting		
Engineering		
Second		

JMS SOUTHEAST, INC.
Temperature Measurement
105 Temperature Lane
Statesville, North Carolina 28677
Phone: (704) 873-1835
Fax: (704) 878-6166
www.jms-se.com
Email: sensors@jms-se.com

REV. A 10-2009

CONTENTS

		Page
1.0	**Selection and Application**	
1.1	Range	4
1.2	Temperature	4
1.3	Media	4
1.4	Oxidizing media	4
1.5	Pulsation/Vibration	4
1.6	Gauge fills	4
1.7	Mounting	4
2.0	**Temperature**	
2.1	Ambient Temperature	4
2.2	Accuracy	4
2.3	Steam service	4
2.4	Hot or very cold media	4
2.5	Diaphragm seals	5
2.6	Autoclaving	5
3.0	**Installation**	
3.1	Installation Location	5
3.2	Gauge reuse	5
3.3	Tightening of gauge	5
3.4	Process isolation	5
3.5	Surface mounting	5
3.6	Flush mounting	5
4.0	**Operation**	
4.1	Frequency of inspection	5
4.2	In-service inspection	5
4.3	When to check accuracy	5
4.4	When to recalibrate	5
4.5	Other considerations	5
4.6	Spare parts	5
5.0	**Gauge Replacement**	5
6.0	**Accuracy: Procedures/Definitions**	6
6.1	Calibration - Rotary movement gauges	7
7.0	**Diaphragm Seals**	
7.1	General	8
7.2	Installation	8
7.3	Operation	8
7.4	Maintenance	8
7.5	Failures	8
8.0	**Dampening Devices**	
8.1	General	8
8.2	Throttle Screws & Plugs	8
8.3	Ashcroft Pulsation Dampener	8
8.4	Ashcroft Pressure Snubber	8
8.5	Ashcroft Needle Valves	8
8.6	Chemiquip® Pressure Limiting Valves	8
9.0	**Test Equipment & Tool Kits**	
9.1	Pressure Instrument Testing Equipment	9
9.2	Tools & Tool Kits	9
9.3	Kits to Convert a Dry Gauge to a Liquid Filled or Weather Proof Case Gauge	9
9.4	2½ & 3½ 1009 Duralife® Gauge Tools	10
Appendix		
	Type 1188 Bellows Gauge Calibration Procedure	11
	Type 1009 Calibration Procedure (Vacuum-Previous Style)	12
	Type 1009 Calibration Procedure (Pressure-Previous Style)	13
	Type 1009 Calibration Procedure (Pressure & Vacuum-Current Style)	14
	Type 1279 & 1379 I&M Liquid Fill Conversion Instruction	15-16
	Type 1082 Calibration Procedure	17-18

Cover photo courtesy of Johnson/Yokogawa Co.

Chemiquip® is a registered trademark of Chemiquip Products Co. Inc.

1.0 SELECTION & APPLICATION

Users should become familiar with ASME B40.100 (Gauges – Pressure Indicating Dial Type – Elastic Element) before specifying pressure measuring gauges. That document – containing valuable information regarding gauge construction, accuracy, safety, selection and testing – may be ordered from:

ASME International
Three Park Avenue
New York, N.Y. 10016-5990
800-843-2763 (US/Canada)
001-800-843-2763 (Mexico)
973-882-1170 outside North America
email: infocentral@asme.org
www.asme.org

WARNING: To prevent misapplication, pressure gauges should be selected considering media and ambient operating conditions. Improper application can be detrimental to the gauge, causing failure and possible personal injury, property damage or death. The information contained in this manual is offered as a guide in making the proper selection of a pressure gauge. Additional information is available from Ashcroft Inc.

The following is a highlight of some of the more important considerations:

1.1 Range – The range of the instrument should be approximately twice the maximum operating pressure. Too low a range may result in (a) low fatigue life of the elastic element due to high operating stress and (b) susceptibility to overpressure set due to pressure transients that exceed the normal operating pressure. Too high a range may yield insufficient resolution for the application.

1.2 Temperature – Refer to Section 2 of this manual for important information concerning temperature related limitations of pressure gauges, both dry and liquid filled.

1.3 Media – The material of the process sensing element must be compatible with the process media. Use of a diaphragm seal with the gauge is recommended for process media that (a) is corrosive to the process sensing element; (b) contain heavy particulates (slurries) or (c) are very viscous including those that harden at room temperature.

1.4 Oxidizing media – Gauges for direct use on oxidizing media should be specially cleaned. Gauges for oxygen service should be ordered to variation X6B and will carry the ASME required dial marking "USE NO OIL" in red letters. Gauges for direct use on other oxidizing media may be ordered to variation X6W. They will be cleaned but carry no dial marking. *PLUS!™* Performance gauges or Halocarbon filled gauge or diaphragm fill is required for use with oxidizing media; order variation XCF.

1.5 Pulsation/Vibration – Pressure pulsation can be dampened by several mechanisms; the patented *PLUS! Performance* gauge will handle the vast majority of applications. One exception to this is high frequency pulsation which is difficult to detect. The only indication may be an upscale zero shift due to movement wear. These applications should be addressed with a liquid filled gauge, or in extreme cases, a remotely mounted liquid filled gauge connected with a length of capillary line. The small diameter of the capillary provides excellent dampening, but can be plugged. The Ashcroft 1106 pulsation dampener and 1112 snubber are auxiliary devices which dampen pulsation with less tendency to plug.

1.6 Gauge fills. – Once it has been determined that a liquid filled gauge is in order, the next step is selecting the type of fill. **Glycerin** satisfies most applications. While being the least expensive fill, its usable temperature range is 20/180°F. **Silicone** filled gauges have a broader service range: –40/250°F. Oxidizing media require the use of **Halocarbon,** with a service range of –40/250°F. Pointer motion will be slowed at the low end of the low end of these temperature ranges.

1.7 Mounting – Users should predetermine how the gauge will be mounted in service: stem (pipe), wall (surface) or panel (flush). Ashcroft wall or panel mounting kits should be ordered with the gauge. See Section 3.

2.0 TEMPERATURE

2.1 Ambient Temperature – To ensure long life and accuracy, pressure gauges should preferably be used at an ambient temperature between –20 and +150°F (–30 to +65°C). At very low temperatures, standard gauges may exhibit slow pointer response. Above 150°F, the accuracy will be affected by approximately 1.5% per 100°F. Other than discoloration of the dial and hardening of the gasketing and degradation of accuracy, non-liquid filled Type 1279 (phenolic case) and 1379 (aluminum case) Duragauge® gauge, with standard glass windows, can withstand continuous operating temperatures up to 250°F. Unigauge models 2½" and 3½" 1009 and 1008S liquid filled gauges can withstand 200°F but glycerin fill and the acrylic window of Duragauge® gauges will tend to yellow. Silicone fill will have much less tendency to yellow. Low pressure, liquid filled Types 1008 and 1009 gauges may have some downscale errors caused by liquid fill expansion. This can be alleviated by venting the gauge at the top plug (pullout the blue plug insert). To do this the gauge must be installed in the vertical position.

Although the gauge may be destroyed and calibration lost, gauges can withstand short times at the following temperatures: gauges with all welded pressure boundary joints, 750°F (400°C); gauges with silver brazed joints, 450°F (232°C) and gauges with soft soldered joints, 250°F (121°C). For expected long term service below –20°F (–30°C) Duragauge® and 4½" 1009 gauges should be hermetically sealed and specially lubricated; add "H" to the product code for hermetic sealing. Add variation XVY for special lubricant. Standard Duralife® gauges may be used to –50°F (–45°C) without modification.

2.2 Accuracy – Heat and cold affect accuracy of indication. A general rule of thumb for **dry gauges** is 0.5% of full scale change for every 40°F change from 75°F. Double that allowance for gauges with hermetically sealed or liquid filled cases, except for Duragauge® gauges where no extra allowance is required due to the elastomeric, compensating back. Above 250°F there may exist very significant errors in indication.

2.3 Steam service – In order to prevent live steam from entering the Bourdon tube, a siphon filled with water should be installed between the gauge and the process line. Siphons can be supplied with ratings up to 4,000 psi. If freezing of the condensate in the loop of the siphon is a possibility, a diaphragm seal should be used to isolate the gauge from the process steam. Siphons should also be used whenever condensing, hot vapors (not just steam) are present. Super heated steam should have enough piping or capillary line ahead of the siphon to maintain liquid water in the siphon loop.

2.4 Hot or very cold media – A five foot capillary line assembly will bring most hot or cold process media within the recommended gauge ambient temperature range. For media above

750°F (400°C) the customers should use their own small diameter piping to avoid possible corrosion of the stainless steel. The five foot capillary will protect the gauges used on the common cryogenic (less than –300°F (200°C) gases, liquid argon, nitrogen, and oxygen.) The capillary and gauge must be cleaned for oxygen service. The media must not be corrosive to stainless steel, and must not plug the small bore of the capillary.

2.5 Diaphragm seals – A diaphragm seal should be used to protect gauges from corrosive media, or media that will plug the instrument. Diaphragm seals are offered in a wide variety of designs and corrosion resistant materials to accommodate almost any application and most connections. Visit www.ashcroft.com for details.

2.6 Autoclaving – Sanitary gauges with clamp type connections are frequently steam sterilized in an autoclave. Gauges equipped with polysulfone windows will withstand more autoclave cycles than those equipped with polycarbonate windows. Gauges equipped with plain glass or laminated safety glass **should not be autoclaved.** Gauge cases should be vented to atmosphere (removing the rubber fill/safety plug if necessary) **before** autoclaving to prevent the plastic window from cracking or excessively distorting. If the gauge is liquid filled, the fill should be drained from the case and the front ring loosened before autoclaving.

3.0 INSTALLATION

3.1 Location – Whenever possible, gauges should be located to minimize the effects of vibration, extreme ambient temperatures and moisture. Dry locations away from very high thermal sources (ovens, boilers etc.) are preferred. If the mechanical vibration level is extreme, the gauge should be remotely located (usually on a wall) and connected to the pressure source via flexible tubing.

3.2 Gauge reuse – ASME B40.100 recommends that gauges not be moved indiscriminately from one application to another. The cumulative number of pressure cycles on an in-service or previously used gauge is generally unknown, so it is generally safer to install a new gauge whenever and wherever possible. This will also minimize the possibility of a reaction with previous media.

3.3 Tightening of gauge – Torque should never be applied to the gauge case. Instead, an open end or adjustable wrench should always be used on the wrench flats of the gauge socket to tighten the gauge into the fitting or pipe. NPT threads require the use of a suitable thread sealant, such as pipe dope or teflon tape, and must be tightened very securely to ensure a leak tight seal.

CAUTION: Torque applied to a diaphragm seal or its attached gauge, that tends to loosen one relative to the other, can cause loss of fill and subsequent inaccurate readings. Always apply torque **only** to the wrench flats on the lower seal housing when installing filled, diaphragm seal assemblies or removing same from process lines.

3.4 Process isolation – A shut-off valve should be installed between the gauge and the process in order to be able to isolate the gauge for inspection or replacement without shutting down the process.

3.5 Surface mounting – Also known as wall mounting. Gauges should be kept free of piping strains. The gauge case mounting feet, if applicable, will ensure clearance between the pressure relieving back and the mounting surface.

3.6 Flush mounting – Also known as panel mounting. The applicable panel mounting cutout dimensions can be found at www.ashcroft.com

4.0 OPERATION

4.1 Frequency of inspection – This is quite subjective and depends upon the severity of the service and how critical the accuracy of the indicated pressure is. For example, a monthly inspection frequency may be in order for critical, severe service applications. Annual inspections, or even less frequent schedules, are often employed in non-critical applications.

4.2 In-service inspection – If the accuracy of the gauge cannot be checked in place, the user can at least look for (a) erratic or random pointer motion; (b) readings that are suspect – especially indications of pressure when the user believes the true pressure is 0 psig. Any gauge which is obviously not working or indicating erroneously, should be immediately valved-off or removed from service to avoid a possible pressure boundary failure.

4.3 When to check accuracy – Any suspicious behavior of the gauge pointer warrants that a full accuracy check be performed. Even if the gauge is not showing any symptoms of abnormal performance, the user may want to establish a frequency of bench type inspection.

4.4 When to recalibrate – This depends on the criticality of the application. If the accuracy of a 3-2-3% commercial type gauge is only 0.5% beyond specification, the user must decide whether it's worth the time and expense to bring the gauge back into specification. Conversely if the accuracy of a 0.25% test gauge is found to be 0.1% out of specification then the gauge should be recalibrated.

4.5 Other considerations – These include (a) bent or unattached pointers due to extreme pressure pulsation; (b) broken windows which should be replaced to keep dirt out of the internals; (c) leakage of gauge fill; (d) case damage – dents and/or cracks; (e) any signs of service media leakage through the gauge including its connection; (f) discoloration of gauge fill that impedes readability.

4.6 Spare parts – As a general rule it is recommended that the user maintain in inventory one complete Ashcroft® instrument for every ten (or fraction thereof) of that instrument type in service.

5.0 GAUGE REPLACEMENT

It is recommended that the user stock one complete Ashcroft® instrument for every ten (or fraction thereof) of that instrument type in service. With regard to gauges having a service history, consideration should be given to discarding rather than repairing them. Gauges in this category include the following:

a. Gauges that exhibit a span shift greater than 10%. It is possible the Bourdon tube has suffered thinning of its walls by corrosion.

b. Gauges that exhibit a zero shift greater than 25%. It is likely the Bourdon tube has seen significant overpressure leaving residual stresses that may be detrimental to the application.

c. Gauges which have accumulated over 1,000,000 pressure cycles with significant pointer excursion.

d. Gauges showing any signs of corrosion and/or leakage of the pressure system.

e. Gauges which have been exposed to high temperature or exhibit signs of having been exposed to high temperature – specifically 250°F or greater for soft soldered systems; 450°F or greater for brazed systems; and 750°F or greater for welded systems.

f. Gauges showing significant friction error and/or wear of the movement and linkage.

g. Gauges having damaged sockets, especially damaged threads.

h. Liquid filled gauges showing loss of case fill.

NOTE: ASME B40.100 does not recommend moving gauges from one application to another. This policy is prudent in that it encourages the user to procure a new gauge, properly tailored by specification, to each application that arises.

6.0 ACCURACY: PROCEDURES/DEFINITIONS

Accuracy inspection – Readings at approximately five points equally spaced over the dial should be taken, both upscale and downscale, before and after lightly rapping the gauge to remove friction. **A pressure standard with accuracy at least four times greater than the accuracy of the gauge being tested is recommended.**

Equipment – A finely regulated pressure supply will be required. It is critical that the piping system associated with the test setup be leaktight. The gauge under test should be positioned as it will be in service to eliminate positional errors due to gravity.

Method – ASME B40.100 recommends that **known** pressure (based on the reading from the pressure standard used) be applied to the gauge under test. Readings including any error from the nominal input pressure, are then taken from the gauge under test. The practice of aligning the pointer of the gauge under test with a dial graduation and then reading the error from the master gauge ("reverse reading") can result in inconsistent and misleading data and should NOT be used.

Calibration chart – After recording all of the readings it is necessary to calculate the errors associated with each test point using the following formula: ERROR in percent = 100 times (TRUE VALUE minus READING) ÷ RANGE. Plotting the individual errors (Figure 1) makes it possible to visualize the total gauge characteristic. The plot should contain all four curves: upscale – before rap; upscale – after rap; downscale – before rap; downscale – after rap. "*Rap*" means lightly tapping the gauge **before** reading to remove friction as described in ASME B40.100.

Referring to Figure 1, several classes of error may be seen:

Zero – An error which is approximately equal over the entire scale. This error can be manifested when either the gauge is

FIG. 1 **TYPICAL CALIBRATION CHART**

INDICATED VALUE (PSI)

True Value – PSI	Increasing – Without RAP	Increasing – With RAP	Decreasing – Without RAP	Decreasing – With RAP
0	–.4	0	–.4	0
40	+.8	+1.0	+1.4	+1.1
80	+.4	+.5	+1.2	+1.0
120	–.4	–1.0	+.8	+.6
160	–.8	–.5	+.6	+.4
200	+.4	+.8	+.4	+.4

ERROR (% OF FULL SCALE)

True Value – % of Range	Increasing – Without RAP	Increasing – With RAP	Decreasing – Without RAP	Decreasing – With RAP
0	–.20	0	–.20	0
20	+.40	+.50	+.70	+.55
40	+.20	+.25	+.60	+.50
60	–.20	–.05	+.40	+.30
80	–.40	–.25	+.30	+.20
100	+.20	+.40	+.20	+.20

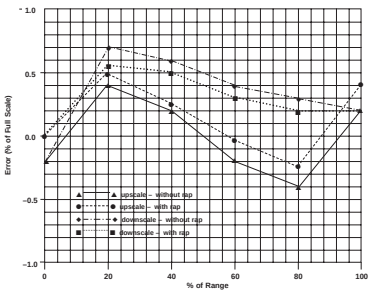

dropped or overpressured and the Bourdon tube takes a permanent set. This error may often be corrected by simply repositioning the pointer. Except for test gauges, it is recommended that the pointer be set at midscale pressure to "split" the errors.

Span – A span error exists when the error at full scale pressure is different from the error at zero pressure. This error is often proportional to the applied pressure. Most Ashcroft gauges are equipped with an internal, adjusting mechanism with which the user can correct any span errors which have developed in service.

Linearity – A gauge that has been properly spanned can still be out of specification at intermediate points if the response of the gauge as seen in Figure 1 (Typical Calibration Chart) is not linear. The Ashcroft Duragauge® pressure gauge is equipped with a rotary movement feature which permits the user to minimize this class of error. Other Ashcroft gauge designs (e.g., 1009 Duralife®) require that the dial be moved left or right prior to tightening the dial screws.

Hysteresis – Some Bourdon tubes have a material property known as hysteresis. This material characteristic results in differences between the upscale and downscale curves. This class of error can **not** be eliminated by adjusting the gauge movement or dial position.

Friction – This error is defined as the difference in readings before and after lightly tapping the gauge case at a check point. Possible causes of friction are burrs or foreign material in the movement gearing, "bound" linkages between the movement and the bourdon tube, or an improperly tensioned hairspring. If correcting these potential causes of friction does not eliminate excessive friction error, the movement should be replaced.

6.1 Calibration – Rotary Movement Gauges and Type 1259 Gauges – Inspect gauge for accuracy. Many times gauges are simply "off zero" and a simple pointer adjustment using the micrometer pointer is adequate. If inspection shows the gauge warrants recalibration to correct span and/or linearity errors, proceed as follows:

a. Remove ring, window and, if solid front case, the rear closure assembly.

b. Pressurize the gauge **once** to full scale and back to zero.

c. Refer to Figure 2 (Ashcroft System Assembly w/Rotary Gear Movement) for a view of a typical Ashcroft rotary system assembly with component parts identified. Refer to

FIG. 2 ASHCROFT SYSTEM ASSEMBLY W/ROTARY GEAR MOVEMENT

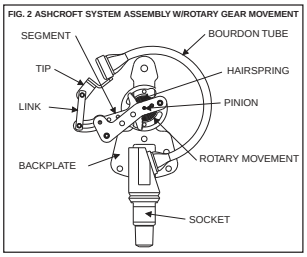

FIG. 2A ASHCROFT TYPE 1259 SYSTEM ASSEMBLY

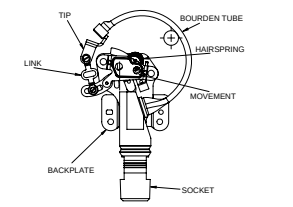

Figure 2A for link configuration of Type 1259 gauge.

d. Adjust the micrometer pointer so that it rests at the true zero position. For open front gauges the pointer and dial must also be disassembled and the pointer should then be lightly pressed onto the pinion at the 9:00 o'clock position.

e. Apply full scale pressure and note the magnitude of the span error. With open front gauges, ideal span (270 degrees) will exist when at full scale pressure the pointer rests exactly at the 6:00 o'clock position.

f. If the span has shifted significantly (span error greater than 10%), the gauge should be replaced because there may be some partial corrosion inside the Bourdon tube which could lead to ultimate failure. If the span error exceeds 0.25%, loosen the lower link screw and move the lower end of the link toward the movement to increase span or away to decrease span. An adjustment of 0.004 inch will change the span by approximately 1%. This is a repetitive procedure which often requires more than one adjustment of the link position and the subsequent rechecking of the errors at zero and full scale pressure.

g. Apply midscale pressure and note error in reading. Even though the gauge is accurate at zero and full scale, it may be inaccurate at the midpoint. This is called linearity error. For corrections to linearity with the Type 1259

FIG. 2B LINEARITY ADJUSTMENT & LINK CONFIGURATION FOR ASHCROFT TYPE 1259

To increase pointer indication at mid-scale, use a pliers to open the link.

To decrease pointer indication at mid-scale, use a pliers to close the link.

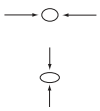

gauges refer to Figure 2B. For rotary movement gauges, note the following: if the error is positive, the movement should be rotated counter clockwise. Rotating the movement one degree will change this error by approximately 0.25%. Rotating the movement often affects span and it should be subsequently rechecked and readjusted if necessary according to step 6.1e and 6.1f.

h. While recalibrating the gauge, the friction error – difference in readings taken with and without rap – should be

noted. This error should not exceed the basic accuracy of the gauge. If the friction error is excessive, the movement should be replaced. One possible cause of excessive friction is improper adjustment of the hairspring. The hairspring torque,or tension, must be adequate without being excessive. The hairspring should also be level, unwind evenly (no turns rubbing) and it should never tangle.

NOTES:

1 For operation of test gauge external zero reset, refer to page 17.

2 For test gauge calibration procedure, refer to Figure 2 on page 18.

7.0 DIAPHRAGM SEALS

7.1 General – A diaphragm seal (isolator) is a device which is attached to the inlet connection of a pressure instrument to isolate its measuring element from the process media. The space between the diaphragm and the instrument's pressure sensing element is solidly filled with a suitable liquid. Displacement of the liquid fill in the pressure element, through movement of the diaphragm, transmits process pressure changes directly to a gauge, switch or any other pressure instrument. When diaphragm seals are used with pressure gauges, an additional 0.5% tolerance must be added to the gauge accuracy because of the diaphragm spring rate.

Used in a variety of process applications where corrosives, slurries or viscous fluids may be encountered, the diaphragm seal affords protection to the instrument where:

- The process fluid being measured would normally clog the pressure element.
- Pressure element materials capable of withstanding corrosive effects of certain fluids are not available.
- The process fluid might freeze due to changes in ambient temperature and damage the element.

7.2 Installation – Refer to bulletin OH-1 for information regarding (a) seal configurations; (b) filling fluids; (c) temperature range of filling fluids; (d) diaphragm material pressure and temperature limits; (e) bottom housing material pressure and temperature limits; (f) pressure rating of seal assembly; (g) accuracy/temperature errors of seal assembly; (h) diaphragm seal displacement. The volumetric displacement of the diaphragm must at least equal the volumetric displacement of the measuring element in the pressure instrument to which the seal is to be attached.

It is imperative that the pressure instrument/diaphragm seal assembly be **properly** filled prior to being placed in service. Ashcroft diaphragm seal assemblies should only be filled by a seal assembler certified by Ashcroft Inc. Refer to section 3.3 for a cautionary note about not applying torque on either the instrument or seal relative to the other.

7.3 Operation – All Ashcroft® diaphragm seals, with the exception of Type 310 mini-seals, are continuous duty. Should the pressure instrument fail, or be removed accidentally or deliberately, the diaphragm will seat against a matching surface preventing damage to the diaphragm or leakage of the process fluid.

7.4 Maintenance – Clamp type diaphragm seals – Types 100, 200 and 300 – allow for replacement of the diaphragm or diaphragm capsule, if that ever becomes necessary. The Type 200 top housing must also be replaced with the diaphragm. With all three types the clamping arrangement allows field disassembly to permit cleaning of the seal interior.

7.5 Failures – Diaphragm failures are generally caused by either corrosion, high temperatures or fill leakage. Process media build-up on the process side of the diaphragm can also require seal cleaning or replacement. Consult Customer Service, Stratford CT for advice on seal failures and/or replacement.

WARNING: All seal components should be selected considering process and ambient operating conditions to prevent misapplication. Improper application could result in failure, possible personal injury, property damage or death.

8.0 DAMPENING DEVICES

8.1 General – Some type of dampening device should be used whenever the pressure gauge may be exposed to repetitive pressure fluctuations that are fairly rapid, high in magnitude and especially when transitory pressure spikes exceeding the gauge range are present (as with starting and stopping action of valves and pumps). A restricted orifice of some kind is employed through which pressure fluctuations must pass before they reach the Bourdon tube. The dampener reduces the magnitude of the pressure pulse thus extending the life of the Bourdon tube and movement. This reduction of the pressure pulsation as "seen" by the pressure gauge is generally evidenced by a reduction in the pointer travel. If the orifice is very small the pointer may indicate the average service pressure, with little or no indication of the time varying component of the process pressure.

Commonly encountered media (e.g. – water and hydraulic oil) often carry impurities which can plug the orifice over time thus rendering the gauge inoperative until the dampener is cleaned or replaced.

Highly viscous media and media that tend to periodically harden (e.g., asphalt) require a diaphragm seal be fitted to the gauge. The seal contains an internal orifice which dampens the pressure fluctuation within the fill fluid.

8.2 Throttle Screws & Plugs – These accessories provide dampening for the least cost. They have the advantage of fitting completely within the gauge socket and come in three types: (a) a screwed-in type which permits easy removal for cleaning or replacement; (b) a pressed in, non-threaded design and (c) a pressed in, threaded design which provides a highly restrictive, helical flow path. Not all styles are available on all gauge types.

8.3 Ashcroft Pulsation Dampener – Type 1106 Ashcroft pulsation dampener is a moving pin type in which the restricted orifice is the clearance between the pin and any one of five preselected hole diameters. Unlike a simple throttle screw/plug, this device has a self-cleaning action in that the pin moves up and down under the influence of pressure fluctuations.

8.4 Ashcroft Pressure Snubber – The heart of the Type 1112 pressure snubber is a thick porous metal filter disc. The disc is available in four standard porosity grades.

8.5 Ashcroft Needle Valves – Type 7001 thru 7004 steel needle valves provide varying degrees of dampening. These devices, in the event of plugging, can easily be opened to allow the pressure fluid to clear away the obstruction.

8.6 Chemiquip® Pressure Limiting Valves – Model PLV-255, PLV-2550, PLV-5460, PLV-5500 and PLV-6430, available with and without built-in snubbers, automatically "shut off" at adjustable preset values of pressure to protect the gauge from damage to overpressure. They are especially useful on hydraulic systems wherein hydraulic transients

(spikes) are common.

9.0 TEST EQUIPMENT & TOOL KITS

See our website www.ashcroft.com for more details

9.1 Pressure Instrument Testing Equipment
Type 1305D Deadweight Tester
Type 1327D Pressure Gauge Comparator
Type 1327CM "Precision" Gauge Comparator

9.2 Tools & Tool Kits For Recalibration of 4½" and Larger Gauges
Type 2505 universal carrying case for 1082 test gauge
Type 266A132-01 span wrench for 1082 test gauge
Type 1281 socket O-Ring kit for 1279/1379 lower connect
Type 1285 4½" ring wrench for 1279/1379 lower & back connect
Type 1286 6" ring wrench for 1379 lower & back connect
Type 3220 pointer puller (all gauges except 1009 Duralife®)
Type 3530 pinion back-up tool for 1009 Duralife®
Type 3220 Handjack set
Type 1105 Tool Kit

9.3 Kits to Convert a Dry Gauge to a Liquid Filled or Weather Proof Case Gauge
Type 1280 conversion kit for 4½" lower connect 1279/1379
Type 1283 conversion kit for 4½" back connect 1279/1379
Type 1284 conversion kit for 6" lower & back connect

TYPE 1105
TOOL KIT

TYPE 3220
HAND JACK SET

9.4 2½ & 3½ 1009 Duralife® Gauge Tools

Description	Part No.
Pointer Puller Screw/Pin[2][3][4]	112A381-01
Pointer Puller Body[2][3][4]	292A133-01
Pointer Staker[2][4]	188A101-01
Span Wrench[2][5] (to adjust span)	266A137-01
Ring Wrench 3½"[1][3][5] (for ring removal) (35 1009)	266B134-01
Ring Wrench 2½"[1][3][5] (for ring removal) (25 1009)	266B135-01
Nest 2½" & 3½"[1][3][5] (to hold gauge for ring removal) (25/35 1009)	266B136-01
Ring Removal Tool[6] (25 1009)	101B221-02
Ring Removal Tool[6] (35 1009)	101B221-01
Nest 2½"[6] (to hold gauge for ring removal) (25 1009)	101B220-02
Nest 3½"[6] (to hold gauge for ring removal) (35 1009)	101B220-01
Type 1230 throttle plug insertion (¼ NPT) for 1009 Duralife[3]	1230
Type 1231 throttle plug insertion (¼ NPT) for 1009 Duralife® (body only)	1231
Tool to open orifice on push-in throttle plug	101A206-01

(1) Formerly 1206T Tool Kit.
(2) Formerly some parts in 1205T Tool Kit.
(3) Both parts must be purchased together.
(4) Previous and current design.
(5) Previous design only.
(6) Current design only.

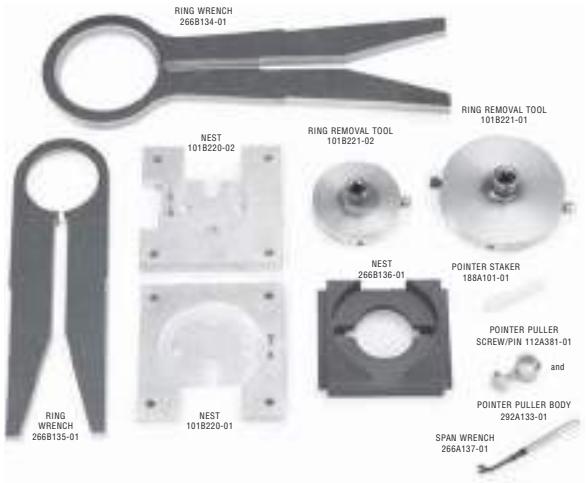

ASHCROFT® Type 1188 Bellows Gauge Calibration Procedure

ASHCROFT®

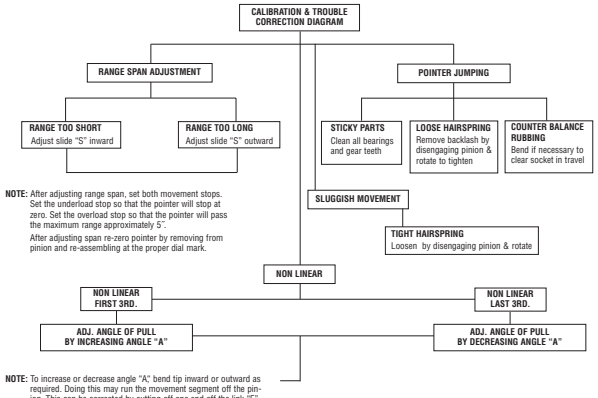

NOTE: After adjusting range span, set both movement stops. Set the underload stop so that the pointer will stop at zero. Set the overload stop so that the pointer will pass the maximum range approximately 5˝.

After adjusting span re-zero pointer by removing from pinion and re-assembling at the proper dial mark.

NOTE: To increase or decrease angle "A," bend tip inward or outward as required. Doing this may run the movement segment off the pinion. This can be corrected by cutting off one end off the link "E" decreasing its length, or makin a new length from .032 dia. phos. bronze wire.
Caution: When reproducing link end, follow figure 44 very closely. this will prevent too much play, or, binding in operation.

REF: Replacing System Bellows
After assembling bellows to the gauge socket securely, subject system to 30 psi for five minutes, allowing bellows to travel approximately 1/8˝ against the overload stop. After this, heat treat system for 15 hours at 250°F; this procedure is necssary to prevent gauge drift.

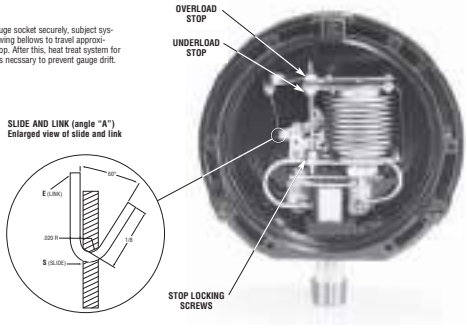

© Ashcroft Inc., 250 E. Main St., Stratford, CT 06614-5145, Tel: 203-378-8281, Fax: 203-385-0499, www.ashcroft.com
All sales subject to standard terms and conditions of sale. I&M008-10173-3/10 (1188)

ASHCROFT® Previous Type 1009 Duralife® Calibration Procedure – Vacuum Range

ASHCROFT®

1. Remove ring, window and gasket pointer.
2. Using a pencil, refer to dial and mark the 0 and 25˝ Hg positions on the case flange.
3. Remove dial.
4. Apply 25˝ Hg vac.
5. Lightly press pointer onto pinion carefully aligning it with the 25˝ Hg vac. mark on the flange.
6. Release vacuum fully.
7. Note agreement of pointer to zero mark on flange.
8. If span is high or low, turn span block as shown in Figure 1.

Figure 1 –

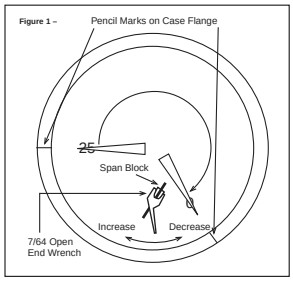

9. Repeat steps 4 through 8 until span is correct.
10. Remove pointer.
11. With 25˝ Hg vac applied, reassemble dial, dial screws (finger tight) and point.
12. Apply 15˝ Hg vac. and note accuracy of indication. If required, slide dial left or right to reduce error to 1% maximum.
13. Firmly tighten dial screws.
14. Firmly tap pointer onto pinion.
15. recheck accuracy at 15 and 25˝ Hg vac. (Figure 2).
16. Reassemble window, gasket and ring.

Figure 2 –

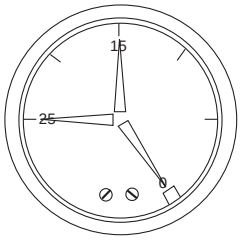

Notes: See page 10 for any tools required to calibrate.

For models produced prior to September 2008 for 2½˝ version and December 2008 for 3½˝ version.
Back of gauge will have a date code sticker.

© 2010 Ashcroft Inc., 250 East Main Street, Stratford, CT 06614-5145, USA, Tel: 203-378-8281, Fax: 203-385-0499, www.ashcroft.com
All sales subject to standard terms and conditions of sale. I&M008-10077 9/01 AMR 05/10

ASHCROFT® Previous Type 1009 Duralife® Calibration Procedure – Pressure Range

ASHCROFT®

Step 1. With the dial off, install pointer at 9 o'clock "lightly," Figure 3.

Figure 3 –

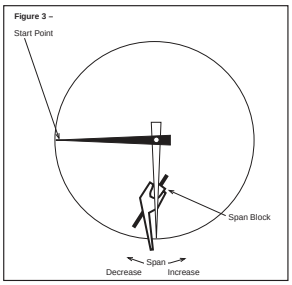

Step 2. Go to full scale pressure…rotate span block with tool until pointer rests at 6 o'clock.

Step 3. Go to zero pressure (9 o'clock)…if pointer has not moved away from start point, go to Step 4. If pointer has moved, repeat Step 1 until span is correct.

Step 4. Install dial with screws snug.

Figure 4 –

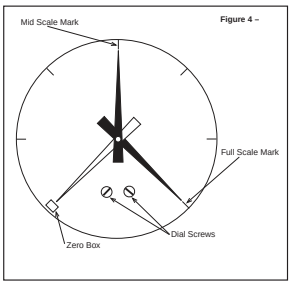

Step 5. Install pointer centered in zero box, Figure 4.

Step 6. Go to full scale pressure…check that pointer is within 1% of full scale mark. If not, remove pointer and dial and return to step 1, Figure 4.

Step 7. Go to mid-scale pressure…rotate dial until mid-scale mark is aligned with pointer, Figure 4.

Step 8. Tighten dials screws and stake on pointer.

Step 9. Check zero and full scale. Reassemble window, gasket and ring.

Notes: See page 10 for any tools required to calibrate.

For models produced prior to September 2008 for 2½˝ version and December 2008 for 3½˝ version.
Back of gauge will have a date code sticker.

© 2010 Ashcroft Inc., 250 East Main Street, Stratford, CT 06614-5145, USA, Tel: 203-378-8281, Fax: 203-385-0499, www.ashcroft.com
All sales subject to standard terms and conditions of sale. I&M008-10077 9/01 AMR 05/10

ASHCROFT® Current Type 1009 Duralife® Calibration Procedure – Pressure and Vacuum Range

ASHCROFT®

Calibration – 1009 Duralife® Gauge –
Inspect gauge for accuracy. At times gauges are simply "off zero" and opening the ventable plug at the top of the gauge will relieve internal gauge pressure and correct the offset. If this is not adequate and inspection shows that the gauge warrants recalibration to correct zero, span and/or linearity errors, proceed as follows:

Remove ring, window, and gasket using Ashcroft Ring Removal Tools P/N 101B220-02 and 101B221-02 for 2½" gauges and 101B220-01 and 101B221-01 for 3½" gauges.

PRESSURE

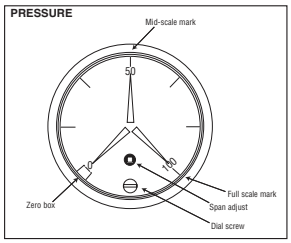

Positive Pressure Ranges –

1. Adjust pointer with a slotted screwdriver until it is in the center of the zero box. This is often all that is required it correct calibration issues.
2. Apply full scale pressure. If error exceeds 1% rotate the black span adjustment device with a #0 square drive bit. Clockwise increases span, counterclockwise decrease span.
3. Fully exhaust pressure and check that pointer still is still in the zero box. If not, repeat step 1 and 2
4. Once 0 and full scale are within tolerance, pressurize gauge to mid-scale.
5. If gauge is within 1%, calibration is complete. If not loosen the dial screw and rotate dial left or right to adjust midpoint. Retighten dial screw.
6. If an adjustment was made in step 5, recheck the gauge at zero and full scale, adjust accordingly until zero, mid and full scale points are in tolerance.

Vacuum Range –

1. Adjust pointer with a slotted screwdriver until it is in the center of the zero box. This is often all that is required it correct calibration issues.
2. Apply 25 inches Hg vacuum. If the error exceeds 1% adjust pointer with a slotted screwdriver until gauge is within tolerance.

VACUUM

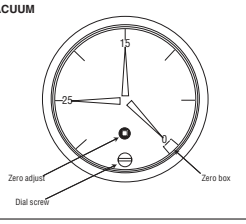

3. Vent to 0 pressure and check pointer position in the zero box. If error exceeds 1% rotate the black span adjustment device with a #0 square drive bit. Clockwise rotation moves pointer clockwise, counter-clockwise rotation moves the pointer counterclockwise.
4. Repeat step 1 and 2 until 0 and 25 inches of Hg are within gauge tolerance.
5. Apply 15 inches Hg vacuum. If gauge is within 1%, calibration is complete. If not loosen the dial screw and rotate dial left or right to adjust midpoint. Retighten dial screw.
6. If an adjustment was made in step 4, recheck the gauge at zero and 25 inches of Hg vacuum, adjust accordingly until zero, 15 and 25 inches Hg are in tolerance.
7. Continue below.

Re-assemble window and ring to gauge:

a. If plastic window is used, push window back into front of gauge, ensure the o-ring does not roll out of window groove (lubricate if necessary). Align the tabs of the window with the tabs of the case front. Once window is in place, install ring and tighten with tools referenced above and shown on page 10.

b. If safety glass is used, reinstall window, gasket, and ring. Ensure that the gasket is seated properly under all four tabs of the ring and does not wrinkle when ring is tightened.

Note: Tighten ring: Apply 120-200inlb of torque. Rotate ring clockwise to tighten. Warning: over tightening of safety glass may induce cracking.

Notes: See page 10 for any tools required to calibrate.

For models produced after September 2008 for 2½˝ version and December 2008 for 3½˝ version.
Back of gauge will have a date code sticker.

© 2010 Ashcroft Inc., 250 East Main Street, Stratford, CT 06614-5145, USA, Tel: 203-378-8281, Fax: 203-385-0499, www.ashcroft.com
All sales subject to standard terms and conditions of sale. I&M008-10081-05/10 AMR 05/10

TYPE 1279 & 1379 SOLID FRONT DURAGAUGE® PRESSURE GAUGE CONVERSION INSTRUCTIONS TO:

- **Convert A Standard Dry Gauge To A Liquid Filled Gauge**
- **Convert A Standard Dry Gauge To A Dry, Weatherproof IP66 Gauge**

ASHCROFT®

TYPICAL 45-1279_5-04L-100* GAUGE SHOWN WITH KIT 101A202-01

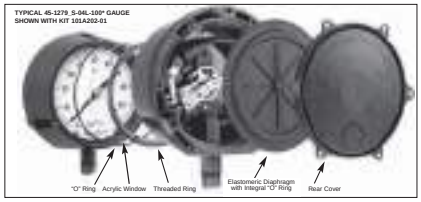

	1279		1379		
	4½" LOWER	4½" BACK	4½" LOWER	4½" BACK	6" LOWER & BACK
KIT PART NO.	101A202-01	101A203-01	1280	1283	1284
QUANTITY INCLUDED					
ACRYLIC WINDOW	1	1	1	1	1
FRONT O-RING	1	1	1	1	1
DIAPHRAGM[1]	1	1	1	1	2(1-LC:1-BC)
REAR COVER	1	1	1	1	2(1-LC:1-BC)
COVER SCREWS	4	4	-	-	-
THROTTLE SCREWS	2	2	2	2	2
GARTER SPRING	–	1	1	1	1
FILL IDENTIFICATION	1	1	1	1	1
THREADED RING	–	–	1	1	1
TOP FILL PLUG	–	–	1	1	–

1. When Halocarbon fill is a requirement, rear case diaphragm bladder material is Viton instead of the standard Buna diaphragm bladder. Consult factory for part number.

TEMPERATURE LIMITS[1]				60 psi and Under Down Scale Zero Shift Required
	Ambient	Process	Storage	
Dry (IP66)	–20/200°F (–29/93°C)	–20/250°F[(2)] (–29/121°C)	–40/250°F (–40/121°C)	NONE
LF (glycerin)	20/150°F (7/66°C)	20/200°F (7/93°C)	0/150°F (–18/66°C)	NONE
(silicone)	–40/150°F (–40/66°C)	–40/200°F (–40/93°C)	–40/150°F (–40/66°C)	.12 psi
(halocarbon)	–40/150°F (–40/66°C)	–40/200°F (–40/93°C)	–40/150°F (–40/66°C)	.12 psi

Note: Other than discoloration of the dial and hardening of the gasketing that may occur as ambient or process temperatures exceeds 150°F, non-liquid-filled gauges with standard glass windows, can withstand continuous operating temperatures up to 250°F (121°C). Liquid-filled gauges can withstand 200°F (93°C) but glycerin fill and acrylic window will tend to yellow. Accuracy at temperatures above or below the reference ambient temperature of 68°F will be affected by approximately .4% per 25°F. Gauges with welded joints will withstand 750°F (450°F (232°C) with silver brazed joints) for short times without rupture, although other parts of the gauge will be destroyed and calibration will be lost. For continuous use and for process or ambient temperatures above 250°F (121°C), a diaphragm seal or capillary or siphon is recommended.
(1) Available for temperature below –20°F, see Production Information page ASH-PI-21B for details

1. Unscrew front threaded ring (turn CCW). Remove and discard glass window. For range spans 60 psi and under, shift pointer down scale by the amount shown in the table. With either the glass or plastic window, replace the O-ring with one furnished in the kit.
2. Remove protective paper from acrylic plastic window taking care not to scratch window. Assemble window in gauge.
3. Moisten face of threaded ring with silicone oil or silicone grease where ring bears up against window. Replace front threaded ring and tighten firmly hand tight. See instructions on reverse side for applying proper torque to ring to establish desired squeeze on O-ring seal. **(Fig. 4).**

It is important to hold gauge **rigidly**, otherwise ring lugs may be damaged during removal or assembly process.

4. From rear of gauge, remove and discard these parts: rear cover and cover gaskets from case.
Note: Disregard Step Nos. 5a and 5b if converting to hermetically sealed version.
When converting a 45-1379 with the top fill hole configuration, p/n 256A176-01 fill plug is required and must be ordered separately.
5. Filling Procedures:
a. Manual Filling Procedure: Place gauge face down on bench and **tip gauge** by blocking up front with a ⅜ inch block at the 12 o'clock dial position. Tipping of the gauge is necessary so fluid will flow into front cavity of the case. Pour in fill liquid to within about ⅛ inch of rear seal lip. When bubbles stop rising, front cavity is filled. Remove ⅜ inch block and pour in liquid until level is about ⅛ inch below rear sealing lip.
Note: An alternative method of filling is to fill the front dial cavity, adding the front window, etc., as in Step No. 3. Then fill the rear of the gauge. This method eliminates the need to tip the gauge.
b. Vacuum Pump Fill Procedure: (This procedure is recommended when filling a large number of gauges.) Place gauge face down and insert a ⅛ inch diameter tube, connected to a vacuum pump, through the 12 o'clock position hole in the rear, solid front portion of the case **(see Fig. 5).**
Evacuate the air from the front dial cavity while pouring in the fill fluid through the case back. The vacuum will displace the air with fluid. When the dial cavity is solidly filled, remove the tubing and continue to pour the fill fluid to within ⅛ inch BELOW the O-ring channel lip.
Pre-measuring fill amount is not necessary with above methods. For reference, amount of fill is approximately 400 ml. or 14 fluid oz. (4½" GA.) and 455 ml. or 16 fluid oz. (6" GA.).
c. Note: The liquid fill level should be ⅜" (±¼) as measured from the inside of the ring at the 12:00 o'clock position.
6. On lower connection gauges, assemble rear seal diaphragm to case.
For back connection gauges see instructions on reverse side. **(Fig. 2/4).**
7. For 1279:
Assemble rear cover and six self tapping screws in a criss-cross pattern and torque to 12 in lbs. (±2 in lbs.)
For 1379:
- Thread rear ring and torque to 200 in lbs
- Install stainless steel back cover using two screws. Torque screws to 14 in lbs. (±2 in lbs.)

8. Assemble throttle screw to threaded hole in socket.
Note: If system is monel (socket wrench flat stamped "PHS" or "PH") use monel throttle screw.
9. Check appropriate box on fill identification label, and peel off label back, and attach fill label to gauge case.
10. If gauge is to be repackaged:
a. Include enclosed instruction sheet inside carton.
b. Change type number on carton label to:
(1) Hermetically Sealed – 1279(*)SH.
(2) Liquid Filled – 1279(*)SL.
*Bourdon Tube System Code

Glycerin or silicone should not be used in applications involving Oxygen, Chlorine, Nitric Acid, Hydrogen Peroxide or other strong oxidizing agents, because of danger of spontaneous chemical reaction, ignition or explosion. Halocarbon should be specified. Products with this fill can be ordered from factory.

The use of fluids other than those listed in the table above (for example, Hydrocarbon-based oils) may result in leakage caused by a reaction between the fluid and the elastomeric seals. Consult the factory before filling with any other fluid.

© 2015 Ashcroft Inc., 250 East Main Street, Stratford, CT 06614 USA, Tel: 203-378-8281, Fax 203-385-0402 www.ashcroft.com
All sales subject to standard terms and conditions of sale. All rights reserved. I&M008-10090 (848276) Rev 10/15

TYPE 1279 & 1379 SOLID FRONT DURAGAUGE® PRESSURE GAUGE CONVERSION INSTRUCTIONS TO:

- **Convert A Standard Dry Gauge To A Liquid Filled Gauge**
- **Convert A Standard Dry Gauge To A Dry, Weatherproof IP66 Gauge**

ASHCROFT®

INSTRUCTIONS FOR USING CONE TOOL AND RING WRENCH

Garter Spring & Diaphragm Assembly (Back Connection Gauge Only)

A. Place cone tool over socket shank as shown.
B. Moisten lip of socket and outer O-ring surface with silicone oil or grease.
C. Place diaphragm with rib side facing upward over cone into case grove.
Diaphragm O-ring must be completely in socket-shank grove.
D. Place garter spring over cone as shown and slide onto diaphragm in socket grove
E. Assemble rear cover with screws per step 7.

Front Ring Assembly (All Gauges)

A. Assemble ring to case by hand to start.
B. Place ring on wrench as shown
C. Use ½" drive extension and torque ring to 200 in. lb

Alternate Method

A. Tighten ring snugly by hand
B. Mark case and ring.
C. Turn ring another 100 to 120 degrees (slightly less than ¼ turn) using the ring wrench and ½" drive socket wrench or place the blunt end of a wooden or plastic dowel against a ring lug and tap with a hammer.

BACK CONNECTION ASSEMBLED GAUGE

Fig. 2

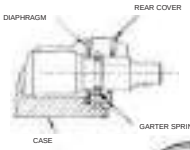

Fig. 3

Fig. 4

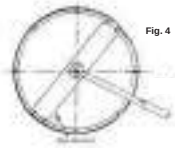

INSTRUCTIONS FOR LIQUID FILLING ASHCROFT® TYPE 1279 AND 1379 SOLID FRONT DURAGAUGE® PRESSURE GAUGES USING A VACUUM PUMP

A. Insert a length of ¼ " diameter tubing through the 12 o'clock position hole in the rear, solid front portion of the case, as shown.
B. Evacuate the air from the front dial cavity while pouring in the fill fluid through the case back. The vacuum will displace the air with fluid.*
C. When the dial cavity is solidly filled, remove the tubing and continue to pour the fill fluid to within ⅛ " below the o-ring channel lip, as shown.
D. When converting a 45-1379 with the top fill hole configuration, p/n 256A176-01 fill plug is required and must be ordered separately.

*To prevent breakage, reduce vacuum to 15 in. Hg for plain glass and safety glass.

Fig. 5

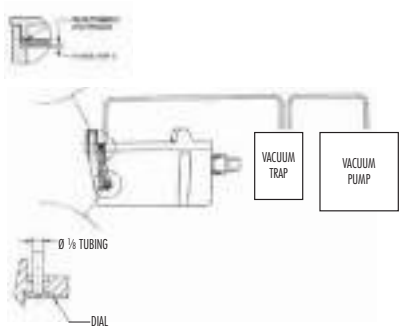

© 2015 Ashcroft Inc., 250 East Main Street, Stratford, CT 06614 USA, Tel: 203-378-8281, Fax 203-385-0402 www.ashcroft.com
All sales subject to standard terms and conditions of sale. All rights reserved. I&M008-10090 (848276) Rev 10/15

ASHCROFT® Type 1082 Test Gauge Calibration Procedure – Pressure Range

ASHCROFT®

INSTRUCTIONS FOR USE OF EXTERNAL EASY ZERO™ ADJUST FEATURE*

Fig. 1

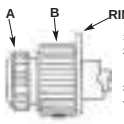

1. LOOSEN RING-LOCKING SCREW **A**.
2. OBTAIN REQUIRED ADJUSTMENT BY ROTATING KNOB **B** CLOCKWISE OR COUNTER-CLOCKWISE.
3. TIGHTEN SCREW **A** DOWN ON KNOB **B**.

*Applicable only for test gauge with hinged ring design.

ADDITIONAL CALIBRATION INSTRUCTIONS

1) "Standards shall have nominal errors no greater than ¼ of these permitted for the gauge being tested." *(Ref: ASME B40=100-1998)*

2) The instrument used as the calibration standard should have a maximum range no greater than 2x that of the gauge being tested. (i.e. Do not use a 400psi standard to test a 15psi gauge.)

3) "Known pressure shall be applied at each test point on increasing pressure (or vacuum) from one end to the other end of the scale. At each test point the gauge shall be . . .
lightly tapped, and then read . . ."
(*Ref: ASME B40.1 ¶ 6.2.4.1*)

4) To read gauge indication, move eye over red pointer tip at OD of printed dial until red reflection in mirror band is no longer visible, and then read the pointer position in reference to the dial.

© Ashcroft Inc., 250 E. Main St., Stratford, CT 06614-5145, Tel: 203-378-8281, Fax: 203-385-0499, www.ashcroft.com
All sales subject to standard terms and conditions of sale. I&M008-10082 11/01 RevB (250-2917-4) AMR 10/07

Installation and Maintenance Instructions for ASHCROFT® Type 1082 Test Gauge Calibration Procedure – Pressure Range

ASHCROFT®

Fig. 2

THIS TEST GAUGE IS PROVIDED WITH A MICROSPAN™ ADJUSTMENT TO SIMPLIFY CALIBRATION. THE FLOW CHART BELOW OUTLINES THE RECOMMENDED CALIBRATION PROCEDURE

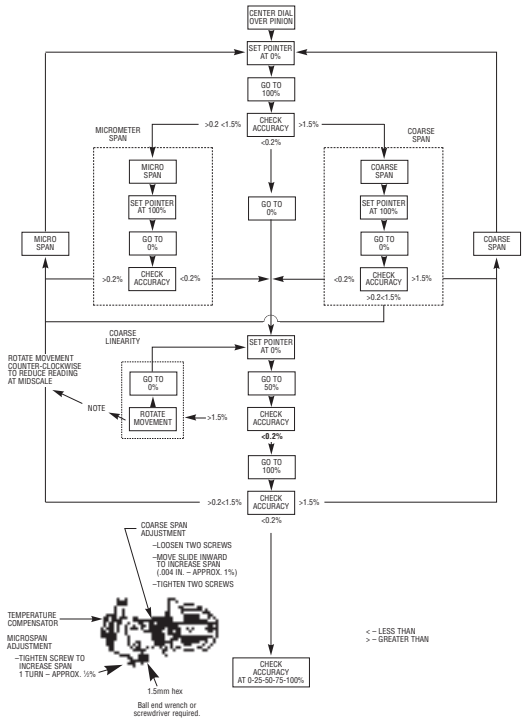

© Ashcroft Inc., 250 E. Main St., Stratford, CT 06614-5145, Tel: 203-378-8281, Fax: 203-385-0499, www.ashcroft.com
All sales subject to standard terms and conditions of sale. I&M008-10082 11/01 Rev C (250-2917-4) 12/15

OPERATION
&
MAINTENANCE MANUAL

For

Vogt Power International Inc.
Heat Recovery Steam Generators

For

ABPR5 Combined Cycle Cogeneration Plant Project
Amata B. Grimm Power (Rayong) 5 Limited

Vogt Power Project No. 17491

Vogt Power Document No. V17491-OMNE-005

VOLUME 5

OPERATION & MAINTENANCE MANUAL

[illegible]

[illegible]

This document contains minimum procedures for operating and maintaining the HRSG components and is intended to assist the operators in planning and scheduling operational and maintenance activities. It is not intended to and does not cover all details or variations in equipment, or provide for every possible contingency.

INDEX

VOLUME 1 – Vogt Power HRSG O&M Manual

SECTION I DESIGN DATA

[illegible]

SECTION II OPERATIONAL PROCEDURES

[illegible]

SECTION III COMMISSIONING PROCEDURES

[illegible]

SECTION IV SUBVENDOR MANUALS

Volume 2 – Divert Damper

Volume 3 – Valves and Inline Components

Volume 4 – Instrumentation

Volume 5 – Deaerator & Heat Exchanger

Volume 6 – Miscellaneous Equipment

STERLING DEAERATOR COMPANY
500 NE Colbern Suite 200 • Lee's Summit, MO 64086
(816) 524-5382 • www.sterlingdeaerator.com

Amata ABPR5
VOGT Power Intl.

Project 17491
PO V0010434
Deaerator / Storage Tank

Tag LAA10BB002- Deaerator
LAA10BB001-Storage

STERLING JOB NO.: 2014-6192

Installation Owners Manual
DOCUMENT NO. 6192- IOM
STERLING REVISION: 0

V17491-DAXE-500

REVISION	DATE	DESCRIPTION	BY	CHECKED	APPROVED
0	21 Dec 16	ISSUED FOR REVIEW	NEW	RCA	MAL

VOGT POWER INTERNATIONAL
Released - Work May Proceed
Hermann Pierce Jan-09-2017

VOGT POWER INTERNATIONAL
V17491-DAXE-500-00
21-Dec-2016

AMATA ABPR5
COMBINED CYCLE COGENERATION PLANT
RAYONG, THAILAND

INSTALLATION, OPERATION & MAINTENANCE MANUAL FOR DEAERATOR AND STORAGE TANK
FOR:
MODEL NO.: 96 VTHS-5237-10Ø1810 ~ DEAERATOR/STORAGE TANK
AND
MANUFACTURER'S DATA REPORTS
PROVIDED BY: UNIMIT ENGINEERING PUBLIC CO. LTD.

VOGT POWER INTERNATIONAL
LOUISVILLE, KENTUCKY, USA
P.O. NO.: V0010434 ~ VPI JOB NO.: V17491
TAG NO'S.: LAA10BB002 – DEAERATOR AND LAA10BB001 – STORAGE TANK

MANUFACTURER:
Sterling Deaerator Company
500 NE Colbern Road, Suite 200
Lee's Summit, Missouri 64086, U.S.A.
Phone: (816) 524-5382 ~ Fax: (816) 524-5480

Sterling Job Number: 2014-6192
SDC DOCUMENT NO.: 6192-IOM REV. 0

VOGT DOCUMENT NO.: V17491-DAXE-500

Sterling Deaerator Company
500 NE Colbern Road, Suite 200 ♦ Lee's Summit, Missouri 64086 USA
(816) 524-5382 ♦ FAX (816) 524-5480 ♦ www.sterlingdeaerator.com

TABLE OF CONTENTS

SECTION 1	**SAFETY INFORMATION**
	1.1 Safety Responsibility 1.2 Boiler Plant System 1.3 Deaerator 1.4 High Pressure 1.5 High Temperature 1.6 Internal Danger 1.7 General Maintenance 1.8 Accessory Equipment 1.9 Pumps (If Applicable)
SECTION 2	**DESCRIPTION OF DEAERATION EQUIPMENT**
	2.1 The Deaerating Principle 2.1.1 Deaerator Operation – Stage One 2.1.2. Deaerator Operation – Stage Two 2.1.2.1 Tray Type Deaerator 2.1.2.2 Spray Type Deaerator 2.2 Spray Valve 2.3 Tray Assembly 2.4 Operation of the Deaerator 2.4.1 Venting 2.4.2 Orifice Type Vent 2.5 Insulation 2.6 Elevation of Deaerating Heater 2.7 Installation 2.8 Operation of Equipment 2.8.1 Recommended Good Practice for Temperature Changes 2.8.2 Hydrostatic Testing 2.9 Recommended Procedure for Storage of Pressure Vessels 2.9.1 Internal Preparation 2.9.2 External Preparation 2.9.3 Maintenance Requirements 2.9.4 Suggested Prime and Finish Coats
SECTION 3	**DESIGN SPECIFICATION ~ DRAWINGS**
	A-6192-1 Rev. 1 Nameplate Drawing V17491-DAXD-500 A-6192-2 Rev. 1 Vogt Nameplate Drawing V17491-DAXD-503 C-6192-1 Rev. 1 General Notes & Nozzle Schedule V17491-DAXD-501 D-6192-1 Rev. 1 Outline Drawing V17491-DAXD-502
SECTION 4	**DEAERATOR APPARATUS**
	4.1 Accessories 4.2 Piping Connections 4.3 Relief Valves 4.4 Vacuum Breakers 4.5 Thermometers 4.6 Pressure Gauges 4.7 Other Equipment 4.8 Maintenance and Inspection 4.9 Bill of Material – Rev. 1 V17491-DAXA-501 4.10 Recommended Spare Parts – Rev. 1 V17491-DAXA-502 4.11 Troubleshooting Guide
SECTION 5	**MANUFACTURER'S DATA REPORTS: Unimit Engineering**

1. Safety Information

1.1 Safety Responsibility

All safety begins and ends with a responsible and informed person whose personal welfare is the primary concern.

It is the responsibility and obligation of the owner/user of a deaerator to insure that all persons who may come in contact with the deaerator are familiar with its operation, maintenance, and safety requirements.

Manways and/or relief valves may or may not be tagged with safety tags, as below:

WARNING
HIGH TEMPERATURE AND HIGH PRESSURE FLUID DISCHARGE MAY RESULT IN SERIOUS INJURY.

WARNING
VESSEL SUBJECT TO HIGH PRESSURE, TEMPERATURE, AND OTHER POSSIBLE DANGERS. READ INSTRUCTION MANUAL BEFORE DISASSEMBLY OR ENTRY.

WARNING
SEE ADDITIONAL WARNINGS BELOW:

CAUTION
SEE ADDITIONAL CAUTIONS BELOW:

WARNING!: VESSEL MAY BE PROTECTED BY NITROGEN (NO OXYGEN) GAS PRIOR TO PUTTING THE UNITS IN SERVICE OR DURING EXTENDED PLANT SHUTDOWN. PLEASE READ INSTRUCTION MANUAL BEFORE ENTRY.

1.2 Boiler Plant System

The deaerator is only part of a large steam making system. Persons who come in contact with the system must know all safety rules of the deaerator and connecting and related equipment. The owner must provide the overall system safety procedures.

Sterling Deaerator Company
500 NE Colbern Road, Suite 200 ♦ Lee's Summit, Missouri 64086 USA
(816) 524-5382 ♦ FAX (816) 524-5480 ♦ www.sterlingdeaerator.com

1.3 Deaerator

Following are potential dangers associated with a deaerator. Do not attempt to disassemble, repair, perform maintenance or otherwise work on a deaerator until all of the potential dangers have been considered and their respective safety precautions followed.

1.4 High Pressure

The deaerator is pressurized during operation and the pressure may remain high after the equipment is shut off. Removal of manway covers; inspection ports or any bolted connections while pressure exists in the vessel can cause the covers, etc. to break loose or discharge hot, high-pressure fluids, which could cause injury. Therefore, disassembly or work on the deaerator should not begin until the following precautions have been taken:

a. Isolate the vessel from the boiler system to insure that there can be no operation, residual or otherwise, of the deaerator. Plant system safety procedures must be consulted to insure proper isolation.
b. Check to see that pressure gauges are properly functioning and that the pressure gauges or other pressure indicators show zero pressure.
c. Carefully open vent valves provided on vessel. Open valves very slowly. Listen for hissing sounds and observe any escaping steam or fluids. If hissing or escaping fluids are present, do not continue to open until all sound or fluid discharge stops.

1.5 High Temperature

The deaerator operates at high temperatures that could cause severe burns. When the vessel is shut off, it can take hours or days to cool to safe temperatures. Any temperature in excess of 212°F (100ºC) could also indicate the presence of internal pressure. Therefore, disassembly or contact with metal parts should not begin until the following precautions have been taken:

a. Isolate the vessel from the boiler system to insure that there can be no operation, residual or otherwise, of the deaerator. Plant system safety procedures must be consulted to insure proper isolation.
b. Check thermometers or other temperature indicators for proper functioning and assure that temperature is less than 100°F (38ºC).
c. Use a temperature sensor or comparable device to determine whether the deaerator has sufficiently cooled.

Sterling Deaerator Company
500 NE Colbern Road, Suite 200 ♦ Lee's Summit, Missouri 64086 USA
(816) 524-5382 ♦ FAX (816) 524-5480 ♦ www.sterlingdeaerator.com

1.6 Internal Danger

EXTREME CAUTION SHOULD BE EXERCISED BEFORE ENTERING THE DEAERATOR.

First, deaerators may contain oxygenless gasses (e.g., nitrogen) that can cause severe illness or death if inhaled. Deaerators are frequently shipped with nitrogen. Many owners and users of deaerators also pressurize the deaerator with nitrogen during short or long-term inactivity. Nitrogen is colorless and odorless and cannot be easily detected. Because of the absence of oxygen in gasses such as nitrogen, inhalation of sufficient amounts can cause severe illness or death. Therefore, do not enter the deaerator until precautions listed below have been taken.

Second, the inside of the deaerator may be very tight and confining. It may also contain sharp corners and protrusions, which could cause injury. Any person entering a deaerator should be knowledgeable of the proposed Occupational Safety And Health Act (OSHA) requirements on confined space entry and should follow the precautions listed below.

THE FOLLOWING GENERAL PRECAUTIONS MUST BE TAKEN BEFORE ENTERING THE DEAERATOR:

a. Isolate the vessel from the boiler system to insure that there can be no operation, residual or otherwise, of the deaerator. Plant system safety procedures must be consulted to insure proper isolation.
b. The work crew should consist of two or more people at all times.
c. Determine that the deaerator contains sufficient oxygen and does not contain any other dangerous gas.
d. Open all vents, manways, or access openings to permit all oxygenless gas to escape and properly ventilate the deaerator. It may be necessary to utilize exhaust fans, ventilators and blowers to speed the ventilation process. Maintain adequate circulation of oxygen throughout work on the deaerator.
e. Provide adequate scaffolding, platforms, and ladders.
f. Provide adequate lighting.
g. Understand the construction of the equipment and all relevant safety requirements.
h. Use appropriate safety equipment including, but not limited to, hard hats, safety glasses or goggles, gloves and heavy duty work clothing.

Sterling Deaerator Company
500 NE Colbern Road, Suite 200 ♦ Lee's Summit, Missouri 64086 USA
(816) 524-5382 ♦ FAX (816) 524-5480 ♦ www.sterlingdeaerator.com

1.7 General Maintenance

The maintenance section of this manual and the instructions in the accessory section provide normal maintenance procedures for the deaerator. Additionally, the following maintenance inspections should be performed to assure continued safe operation.

a. Inspect for cracks, breakage of internal parts and internal erosion or corrosion in or near welds or pressure parts (e.g., shells and heads).
b. Inspect pumps for loose bolts or coupling parts. If the pumps are disassembled, examine all bearings, shafts, impellers, and seals for wear and damage.
c. Safety and relief valves should be activated periodically to assure proper performance. These valves should also be inspected to assure that no external devices such as "gags" or extraneous parts can impede proper operation.
d. Make certain that all safety tags are replaced when maintenance and inspections are complete.

1.8 Accessory Equipment

Safety valves, relief valves, and other blow-off type equipment (also vacuum breaking equipment) are used to protect deaerators against damage, and all deaerators are protected by one or more safety devices. These devices are designed to discharge in the event that some operating condition causes the deaerator to exceed the standard operating level. This equipment partially relieves the pressure in the vessel and prevents damage.

The discharge from this equipment is extremely hot and can cause severe injury. Therefore, the following safety precautions should be observed in order to prevent personal injury:

a. If customer is installing these devices, locate them in areas where personnel cannot come in close contact during operation.
b. Each device should have a suitable exhaust duct, pipe, or deflector to insure the discharge (or vacuum suction) cannot cause personal injury.
c. Since these safety devices are not necessarily provided by Sterling Deaerator, it is necessary to consult the maintenance, operation, instruction and safety manual of the specific supplier.

1.9 Pumps (If Applicable)

Various pumps are used with every boiler feed water system. Injury can occur if proper operation and maintenance procedures are not followed. Therefore, persons performing maintenance on pumps should obtain all instructions, procedures, and safety requirements. Additionally, the following general safety practices should be followed:

a. All pumps must be installed with a negligible pipe load on the pump inlet and outlet flanges in the cold condition. Excess loading on these nozzles will affect the manufacturer's warranty. If damage to the pump occurs from non-relieving pipe loading during installation then the pump warranty will likely be void.
b. A qualified professional prior to operation of the pump must precisely realign all pumps due to shipping and transit rigors. Failure to do so will affect the manufacturer's warranty. If damage occurs to the pump without proper realignment in the field, the pump warranty will likely be void.
c. Avoid working on the pump while it is operating.
d. If running adjustments are necessary, avoid wearing loose clothing that could become entangled with rotating parts.
e. Always assure that proper electrical disconnections and positive valve lockouts are used.
f. If the pump must be dismantled, beware of hot fluids and high pressure.

2. Description of Deaeration Equipment

2.1 The Deaerating Principle

Today a deaerator is an essential part of a steam system. Corrosion in boiler cycles is caused mainly by the presence of noncondensable gasses such as oxygen and carbon dioxide, or by a low pH value. While the pH is raised by the addition of chemicals, it is more economical to remove noncondensable gasses mechanically. This mechanical process is known as deaeration and its employment increases the life of a steam system dramatically.

Using Henry's law of partial pressures, the principle behind deaeration can be explained as follows: The quantity of a gas dissolved in a given quantity of liquid is directly proportional to its partial pressure surrounding the liquid. Therefore, by reducing the partial pressure of the unwanted gasses in the surrounding atmosphere, the gasses are diminished. These partial pressures are reduced by spraying the liquid into a countercurrent flow of steam. The steam, which is free of noncondensable gasses, is the liquid's new atmosphere and Henry's law prevails. Using steam is advantageous in that the solubility of a gas in a liquid decreases with an increase in the temperature of that liquid. The liquid is sprayed in thin films in order to increase the surface area of the liquid in contact with the steam, which, in turn, provides more rapid oxygen removal and lower gas concentrations.

With these principles in mind, Sterling Deaerator employs a two-stage system of heating and deaerating feedwater. This system reduces oxygen concentration to less than 0.005 cc/liter (7 ppb), and completely eliminates the carbon dioxide concentration when tested by the APHA method. Testing for oxygen concentration shall be done in accordance with ASME Performance Test Code 12.3. Other methods of testing may be used if mutually agreed upon by the parties involved.

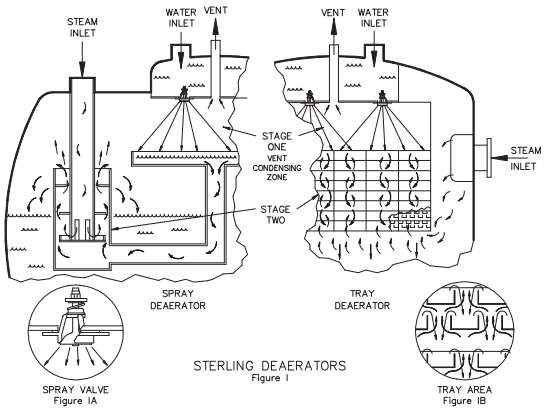

STERLING DEAERATORS
Figure I

2.1.1 Deaerator Operation - Stage One

The first stage of deaeration is shown in Figure I. The prime element in our vent condenser zone is the self-adjusting spray valve that allows incoming water, which is to be deaerated, to discharge as a thin-walled, hollow cone spray (See Figure IA). Because steam flows countercurrent, intimate water to steam contact occurs with consequent latent heat transfer. As the falling water reaches the tray stack (tray type deaerator), or the collection basin (spray type deaerator), its temperature is within 2°F (1ºC) of the counter-flowing saturated steam temperature. Most of the dissolved oxygen and free carbon dioxide have been removed at this point. Since nearly all of the steam has been condensed, the noncondensable gasses and the small amount of "transport" steam exits through the vent piping

2.1.2 Deaerator Operation - Stage Two

2.1.2.1 Tray Type Deaerator

The partially deaerated water enters the tray stack at saturation temperature. The heated water flows down over the trays, zigzagging as shown in Figure IB through counterflow steam. This arrangement provides additional retention time to allow a final oxygen strip by the purest steam. The two-stage tray deaeration technique is the most reliable method for meeting critical performance over a complete load range.

2.1.2.2 Spray Type Deaerator

Water from the collection basin flows down the vertical downcomer and into the scrubber section where it comes in contact with upcoming steam. Through carefully sized orifices, the steam and water violently mix, heating and removing the remaining gasses from the water. The mixture moves to the top of the scrubber housing and there the steam separates from the water and gasses and continues to flow up into the spray area and the vent condensing zone (Stage One of our deaerator). See Figure I.

Water from the collection basin flows down the vertical downcomer and into the scrubber section where it comes in contact with upcoming steam. Through carefully sized orifices, the steam and water violently mix, thus setting off heating and flashing of the water as it propels the mixture to the top of the scrubber housing. At this point steam separates from the mixture and continues to flow up into the vent condensing zone, or Stage One of our deaerator. See Figure I.

2.2 Spray Valve

CAUTION!: USE ONLY HAND TOOLS WHEN INSTALLING OR REMOVING NUTS AND ATTACHING SPRAY VALVES TO SPRAY VALVE SUPPORT PLATE.

CAUTION!: DO NOT USE ANY POWER ASSISTED TOOLS OR APPLY UNDUE FORCE WHEN REMOVING THESE NUTS.

Should the nuts appear to bind, brush the exposed threads with a wire brush and/or apply some type of lubrication (if acceptable).

CAUTION

SEE CAUTIONS IN SAFETY RESPONSIBILITY SECTION

Sterling's streamlined spray valve produces maximum water surface, providing ideal heating of the water to be deaerated. This configuration is ruggedly constructed to withstand the severest of deaerator operating conditions. The spring-loaded valve is self-adjusting, thereby assuring over a complete flow range, a well- patterned, hollow thin film cone. It does not clog as guided valves do or corrode and is virtually free of wear vibration. The type 316 stainless steel body and valve stem investment castings benefit from A O D (Argon-Oxygen-Carburization) refined steel by precise chemistry control and improved corrosion resistance.

The valve body and stem are held in an adjustable, spring-loaded retainer ring by a 1/2 inch (12.7 mm) stainless steel hex nut and lock washer so the stem is never in contact with the valve body. The plug is parabolic in shape and rests against a spherical seat. During operation the smoothly rounded valve plug remains centered in the valve throat, much the same as a balloon supported by an air jet, and the incoming water flows uniformly into the formation of its hollow cone spray pattern. Each spray valve assembly is installed using two 1/2 inch (12.7 mm) hex nut and lock washers. Ring gaskets are made of 100% Teflon. The pressure drop across a spray valve operating at normal design flow rate is 2 psi (0.14 Bar).

Two basic problems are encountered in the spray stage of deaerator operation. The first is entrapment of scale or foreign objects in spray valves utilizing steam guides. This condition leads to jamming of the valve plug in a fixed pattern. Even without foreign matter interference, the normal lateral movement of the valve stem against the stem guides can cause rapid wear and breakage.

The second problem occurs when low flow rates, start-ups or sudden flow changes are imposed upon spray valves or other devices of fixed orifice design. This results in a collapse of the spray pattern into solid streams with poor surface exposure, sluggish heat transfer and poor utilization of steam in the vent condensing chamber. It also shortens the exposure time during which pure steam is stripping non-condensables from the water droplets in the tray stack or scrubber. Sterling's spray valve assembly eliminates both of these problems.

Variations in flow rates are accommodated by utilizing a variable orifice opening which varies in direct proportion to fluctuations in inlet water flow. This results in a thin-walled, hollow cone spray pattern at different flow rates, and the intimate steam-water contact that prevails during this thin-film phase allows for extremely rapid latent heat transfer. Thus the angle and shape of the spray pattern persists despite sudden changes in the flow rates such that first-stage heating and deaeration are assured.

Sterling Deaerator Company
500 NE Colbern Road, Suite 200 ♦ Lee's Summit, Missouri 64086 USA
(816) 524-5382 ♦ FAX (816) 524-5480 ♦ www.sterlingdeaerator.com

2.3 Tray Assembly

The severe operating conditions, erosive impingement, and occasional upsets to which deaerator trays are subjected have been the criteria for the design, material selection, and hold-down system for the tray stack, now proven in more than 3000 installations.

Careful inspection and evaluation of any proposed tray design are strongly suggested. The tray stack is an area of the deaerator in which rugged construction and material durability are mandatory, not only because of this important performance role served by each tray, but also because transient periods and upset conditions can be very punishing to the entire tray system.

Each tray assembly consists of eight trays arranged in two staggered tiers of four each, and rigidly fastened between two headers with stainless steel rivets. The trays are formed into channels of 16 gauge, type 430 stainless steel.

The assemblies are nested vertically to form tray modules, which sit side-by-side to comprise the tray stack. Very important to note is the tray channel troughs are installed facing upward. There are several operating advantages in this arrangement.

First, the water-filled tray channels provide an exclusive "water cushion" effect and absorb the erosive action of the falling water. Second, the staggered tray channels create a series of flow reversals and vigorous scrubbing action as the water cascades downward in the countercurrent of steam. Uniquely, the droplets leaving the bottom of the tray stack are being "stripped" by the steam in its purest state. Third, the detention time afforded by the tray channel troughs is exceedingly important during wide swings in load and steam volume because it allows for the necessary steam-water contact time to assure final deaeration.

Finally, it is suggested the tray assembly be viewed from beneath so as to gain a perspective of the strength and relatively low pressure drop that would be presented by the tray stack to an upset condition. The smooth side of the tray channel faces down such that minimum flow resistance and maximum strength are there to absorb pressure differentials.

Sterling Deaerator Company
500 NE Colbern Road, Suite 200 ♦ Lee's Summit, Missouri 64086 USA
(816) 524-5382 ♦ FAX (816) 524-5480 ♦ www.sterlingdeaerator.com

CAUTION NOTE: See the safety instructions in the Instruction manual before entering the vessel.

TRAY INSTALLATION PROCEDURE

STEP 1. Prior to assembly of any trays, check the tray enclosure length, width, height and squareness to assure that no distortion has occurred in the installation area.

STEP 2. For alignment and fit-up, install trays (one deep) across the back of the enclosure (opposite Manway end) and install trays (one deep) along the side of the enclosure to assure proper fit into the enclosure (See Step #2 page).

STEP 3. The correct procedure for stacking trays is shown on Step #3 page. Care shall be taken to avoid bending or damaging tray tabs. (If edges of trays are serrated, serrations must face downward.) Trays should be flush with the enclosure wall.

STEP 4. The hold-down angles are installed after all trays have been installed.

Slide the back hold-down angle over the bolts that stick through the back of the enclosure through the slots on the angle. Install the washers and lock nuts on the ½" [12.7mm] studs. Push down the angles snug on the trays and tighten the nuts.

NOTE: Only enclosures that are two bays deep will have a middle hold-down angle. If applicable, install the middle hold-down angle by sliding the angle over the bolts through the slots on the hold-down angle end plates. Install the washers and lock nuts on the ½" [12.7mm] studs. Push down the angles snug on the trays and tighten the nuts.

Slide the front hold-down angle bolts through the front of the enclosure through the slots on the enclosure wall. Install the washers and lock nuts on the ½" [12.7mm] studs. Push down the angles snug on the trays and tighten the nuts.

IMPORTANT: TRAYS SHOULD FIT SNUGLY SO PROCEDURE NEED NOT BE REPEATED.

Sterling Deaerator Company
500 NE Colbern Road, Suite 200 ♦ Lee's Summit, Missouri 64086 USA
(816) 524-5382 ♦ FAX (816) 524-5480 ♦ www.sterlingdeaerator.com

*** 80 Trays for this Job**

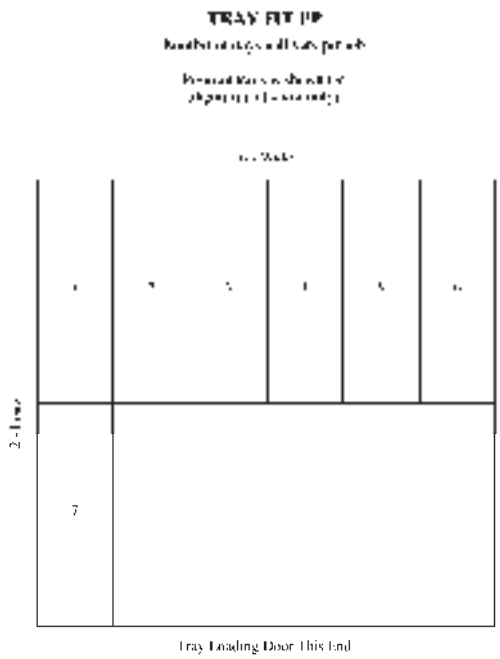

STEP #2

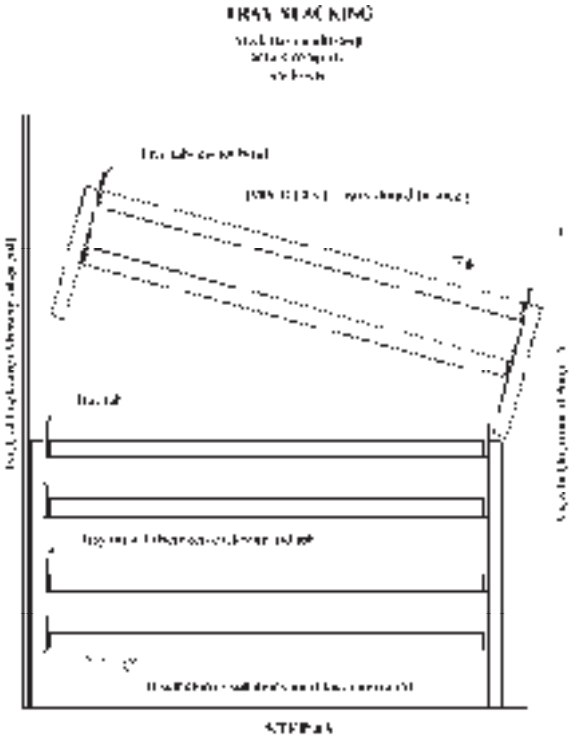

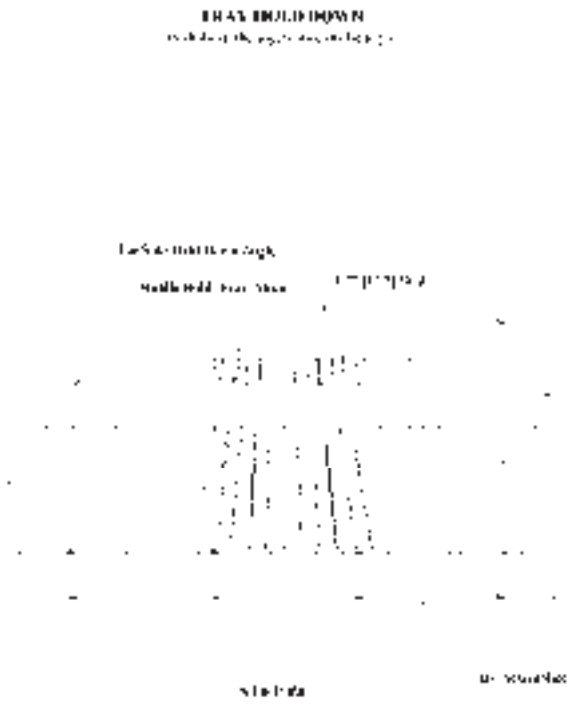

2.4 Operation of the Deaerator

Efficient removal of the non-condensable gasses from the deaerating heater requires that the vent valve be opened sufficiently to allow complete discharge of the gasses passed to the vent condenser outlet pipe. The maximum concentration of the non-condensable gasses such as oxygen or carbon dioxide passing out the vent depends on the degree of condensation produced by the steam and gas mixture passing through and around the spray created by the special spray valve. The optimum condition is when the unit is venting all non-condensable gasses with the minimum steam loss. This point can only be found through trial and error.

A vent condenser is not functioning properly when there is entrainment of water in the plume discharging to the atmosphere or where a steam plume cannot be observed, or the plume appears to be puffing. These malfunctions can be caused by any of a number of reasons such as insufficient vent opening, erratic spray valve action or incorrect vent piping.

2.4.1 Venting

The vent valve should not be operated in a closed position. Normally, the valve should be open one or more turns to allow for complete removal of the gasses. To assure that the vent valve is not inadvertently closed completely a small hole may be drilled in the gate of the vent valve. To determine the correct amount of opening required, the vent valve should be opened approximately one or two turns and the effect on the temperature noted. If no appreciable effect on the temperature is noted after a period of one hour, oxygen tests should then be made to determine the effectiveness of venting; satisfactory reduction of oxygen is obtained when tested by a recognized sampling and testing procedure. The vent setting of the valve can be further decreased by tightening the vent valve. Normally, the plume of steam would indicate sufficient venting if it appears firm and rises approximately 18 inches (457.2 mm) to 3 feet (914.4 mm) above the termination of the pipe. If after reducing the vent valve openings a drop in operating temperature is observed, or a difference between outlet temperature of the water in comparison with the saturated temperature of the steam is observed, then the venting is not adequate and the vent valve or orifice must be opened further.

2.4.2 Orifice Type Vent

Where loads are very small or where uniform operation (flow rates and pressures) can be expected for long periods of time a fixed orifice may be employed. This would usually consist of a drilled pipe cap mounted above the vent valve. The vent valve should always be full open, and precautions noted above should be observed. The optimum size of the hole in the orifice cap can best be found by drilling a small hole (1/8" to 1/4") (3.2 to 6.4 mm) and checking the dissolved oxygen in the effluent. Also, observe the water temperature to see that it is at saturation temperature of the steam within the heater. If the oxygen reading is high or the temperature is low, increase the hole size in the orifice and recheck. Repeat until oxygen is below the guarantee level and the temperature rises to steam saturation temperature.

2.5 Insulation

The deaerating heater, storage tank and all equipment carrying hot water or containing steam should be thoroughly insulated to prevent loss of heat. This includes all external stiffening rings. Sample connections and thermometer wells should not be covered, and provision should be made to allow for annual inspection through manholes and to inspect control valves, level controllers, etc., without damaging the insulation and covering.

The insulation selection, in addition to protecting the vessel and preventing heat loss, must take personnel health and safety into consideration. The outer surface of the insulation and lagging steam must be maintained at a temperature which is safe for personnel working on or near the equipment. Insulation materials must comply with OSHA regulations.

2.6 Elevation of Deaerating Heater

Any deaerating heater must be elevated above the boiler feed pump to insure sufficient net positive suction head on the inlet side of the boiler feed pump. The minimum head required on the suction of the pump should be carefully checked with the pump manufacturer, emphasizing the fact that the pump is handling water at a temperature corresponding to the saturated temperature of the steam supplied to the deaerating heater. Flashing and consequent "steam binding" of the pump may occur if the boiler feed pump is operated with low or negative suction head. The suction head is considered that distance from the low water line in the deaerating heater or bottom of storage tank to the centerline of the feed pump.

2.7 Installation

Vessel installation should follow all applicable plant and code safety regulations. The vessel installation chronology is as follows: ***(Note: Lugs should be confirmed adequate for lifting the entire vessel dry weight. On occasion slings are required to lift the entire empty weight since some lugs are added as quides only).***

1. Install storage tank slide plates on the support structure per Sterling Installation Drawings.
2. Set storage tank on support structure and add anchor bolting or set vessel on anchor bolts.
3. The heater vessel should then be mounted on top of the storage vessel.
4. The connecting nozzles between the vessels shall be welded. Slight adjustment may be required to obtain the best fit-up of the connecting nozzles.
5. Add connection bolting between heater supports and corresponding supports on storage vessel.
6. Secure and tighten anchor bolts and connection bolting. All sliding support bolting should be hand tightened and tack welded only.
7. Connect process piping in appropriate sequence.

DEAERATOR AND STORAGE TANK INSTALLATION FLOW CHART

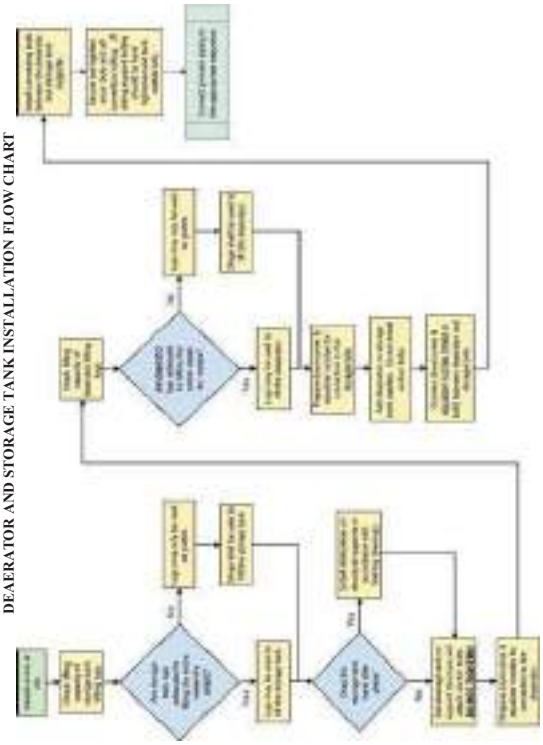

Inspection should occur before start up. Every deaerating heater has been designed to meet specific operating conditions. Fabricating and inspection procedures are the best known. The material selected for each of the components has been proven over many years of service to be the best for the service within economic considerations. However, before the unit is installed and operated, it is strongly suggested that the deaerating heater be rechecked to insure no damage has occurred to the heater since its inspection.

The spray valves should be checked to insure that they are installed correctly with the spring on the water side of the water chamber. Stainless steel hex nuts and lock washers are used to fasten the valve to the vessel so they will not loosenunder any load. The nuts should be tight and the gasket should be firmly seated. Inspection should be made to make sure all internal inspection plates are in place, tightly bolted, and that all debris has been removed from the tank. This is especially true after all piping connections are made and the unit is flushed out. It is recommended that the water side of the water box be checked if the pipe lines have been hydraulically flushed, as often debris will wash in and will lodge in this compartment and eventually work through the deaerating heater to the boiler feed pump. Baffles should be inspected to insure that no damage occurred during shipping or installation, such as cracks of welds or other points that could be subject to damage.

Trays are shipped either separately boxed or are sometimes installed within the heater. Refer to your job bill of material under "Tray Assembly" to determine how these are shipped. If shipped within the heater, inspection should be made to ascertain that no damage accrued during shipping or rigging. The trays should be level and nested together with no gaps or spaces between. To inspect or install trays, it is necessary to open the access door and the inner tray door or holding braces. The trays should be installed as indicated on the internal assembly drawing. Some trays have serrated edges; install these with the edges (saw teeth) pointing down. For trays with channel-shaped sections, install with the channel flanges pointed up.

The vent piping should be installed with no sharp vent bends or trays that could obstruct the flow of gasses. The ideal vent pipe rises vertically from the heater to the valve located above the junction of the vessel in a short length of pipe above the valve. This is normally satisfactory where a slight amount of steam vapor can be tolerated in the area of the deaerating heater. Where this is not possible and it becomes necessary to pipe the vent line to the outside atmosphere, precautions must be taken to avoid consistently long lines with a great number of turns. Horizontal runs should be avoided wherever possible. Trapped pockets in pipe lines must be eliminated if the heater is to operate successfully. The vent plume should be visible to the operator to enable him to periodically check the plume; therefore, avoid piping the vent to stacks, risers, or other closed systems unless provision is made to allow for this periodic inspection.

2.8 Operation of Equipment

After the unit has been completely installed and all equipment has been tested and checked, the following procedures should be followed when commencing operation of a deaerating heater:

CAUTION!: BEFORE OPERATION OF THIS EQUIPMENT, THE USER MUST READ THIS MANUAL, ESPECIALLY THE SECTION CONCERNING SAFETY.

a. The start-up period should be carefully planned so that wastage of water and steam to the drain do not unduly overload existing facilities such as pumps, engines, heaters, etc.
b. Flush out all lines and tanks with water until there is no apparent indication of foreign matter or rust. Spray valves and nozzles should be free of foreign material.
c. Manually check all controls to see that each is working freely and that all shipping stops are removed. Refer to the descriptive literature and operating instructions for proper operation and adjustment of controls, instruments and special equipment.
d. Check to see that all instruments are operating and indicating correctly.
e. Open all vent valves or open orifice bypasses to atmosphere. If orifice plates are not bypassed, remove the orifice plate to allow free venting to atmosphere.
f. Close the outlet valve from the heater to the feed pump.
g. Start the flow of inlet water and slowly increase to 15% to 30% of the design inlet flow rate.

IMPORTANT NOTE: Large industrial and central station deaerators and most scrubber type deaerators which operate from 50 PSIG to 150 PSIG (3.4 BarG to 10.3 BarG) frequently have a design temperature rise (inlet water temperature to outlet water temperature) of up to 150°F (66ºC) Starting up with cold water at high inlet water rates can require steam flows exceeding design limits. This can cause violent pressure fluctuations and possible damage to the internals. The following formula shows the relationship to consider.

$$\frac{DesignWaterRate \times DesignTemperatureRise \times SteamSpecificVolume@Design}{StartUpWaterRate \times StartUpTemperatureRise \times SteamSpecificVolume@StartUp} \geq 1$$

h. After making certain that adequate steam pressure is available, open steam valve slowly admitting steam into the deaerator. Expect some rumbling with a cold vessel. Check deaerator pressure gauge and be certain to maintain a positive pressure on the vessel. A proper start-up is not possible with inadequate steam pressure.
i. ***CAUTION!:*** Do not fill the deaerator with steam and then start the water. This will create noise and vibration which can damage the internals of the deaerators. Deaerators not designed for full vacuum can be partially collapsed. Caution is urged even if a vacuum relief valve is installed.
A similar condition can occur where the deaerator sits at idle for a time with steam pressure on the vessel but no water entering a condensate inlet. Since the spray valves

are not water tight, the water box will drain and then fill with steam. Where this situation is likely to occur, provisions for flushing the steam from the condensate line and water box with water from the deaerator storage tank or other source (at saturation temperature) prior to condensate return must be provided. If hot water is not available, the unit must be shut down and started as in steps E, F, and G, etc. above.
j. As water moves up to and reaches the operating level, check the operation of the limit switches and inlet controller. Manually, continue water flow and check high level overflow controls.
k. When a strong flow of steam issues from the vents, start throttling back on the vent valves and check storage tank temperatures. The gauge should read 2°F to 3°F (1ºC to 2ºC) below saturation temperature at the existing pressure.
l. Open steam valve full open so that steam pressure control is operating.
m. Throttle back vent valves to operating positions. Install orifice plates if removed. Final vent valve position or orifice plate sizing must be determined in conjunction with oxygen tests during unit operation.
n. Deaerator is now ready for operation. Open outlet to feed pumps.

2.8.1 Recommended Good Practice for Temperature Changes

A deaerator is a direct contact heat exchanger. This type of equipment can be exposed to severe thermal and pressure excursions which can cause damage to the vessel due to stress corrosion, corrosion fatigue and similar phenomena. Cyclic operation is a major contributor to the damage. These practices apply to cyclic and non-cyclic equipment.

To assure long life, the guidelines below should be followed:

a. Changing cold or hot water admission to the waterbox must be accomplished in a controlled manner. The control must assure that rate of temperature change of the metal in the shell or the water box does not exceed 400°F (222ºC) per hour with instantaneous changes not greater than 50°F (28ºC) per minute for total excursion of 150°F (83ºC).
b. Pressure changes in the heater must be gradual. Pressure changes are accompanied by changes in temperature. The change in temperature should not exceed the limitations above.
c. Cold start-up can severely stress a deaerator. It is not unusual to have start-up steam with temperatures of 600°F (315ºC) and higher. To avoid severe thermal shock, it is recommended that cold start-ups be preceded by a warm-up period. The warm-up consists of slowly admitting start-up steam with the vents open and no flow into the water box. The steam flow should be regulated to permit the steel shells to heat at a rate of 50°F (28ºC) per minute up to about 200°F (93ºC). Water in the storage tank should also be heated to the same value. Note that the heating of the storage tank and its water will be much slower than the heater portion of the deaerator.
When the entire vessel and its contents are heated, the steam supply should be shut off and any remaining steam vapor should be vented. Then proceed with the normal start-up.

d. Accelerated cooling is often desirable for repair or maintenance. However, accelerated cooling using cold water can cause thermal shock and equipment damage. Accelerated cooling can be accomplished using a cooling fluid which is 100°F to 150°F (56ºC to 83ºC) lower than the metal temperature until the metal has cooled to about 250°F (121ºC). The rate of change of metal temperature should stay in the 100°F/hr.(56ºC/hr.) range. Once the metal is at or below 250°F (121ºC), cooling water of 60°F to 70°F (16º to 21ºC) may be used.

2.8.2 Hydrostatic Testing

Hydrostatic test pressure may create stresses higher than the equipment design stress. This is not harmful unless hydrostatic tests are performed using very cold water. In general, the hydrostatic tests should be done using the guidelines of the ASME Code, Section VIII, Div. 1, Paragraph UG-99.

2.9 Recommended Procedure for Storage of Pressure Vessels

2.9.1 Internal Preparation

Vapor Absorption - The shell and all carbon steel internal parts are to be blast or power wire brush cleaned and given a protective coating such as Leeder 228. All openings are to be sealed and taped and a vapor absorbing chemical installed in the shell. The normally used absorption chemicals are Silica Gel or activated alumina and are used in quantities of one (l) pound (0.45 Kg) for every 100 cu. ft.(2.8 Cu.M) of vessel.

This method is suited for storage periods of six to twelve months depending upon the environment. Longer periods would require that the chemicals be replaced periodically as the manufacturer recommends.

Nitrogen Blanketing - No internal preparation of the vessel shell is required. This method requires that all openings are tightly sealed, gasketed, and/or welded shut. Nitrogen (or other inert gas) is injected into the shell. The vessel is pressurized to 3 to 5 PSI (0.2 to 0.3 BarG) and all air vented.

Vessels may be stored in any environment for indefinite periods but constant checking of the pressure must be made and the nitrogen cylinders replaced as required.

Sterling Deaerator Company
500 NE Colbern Road, Suite 200 ♦ Lee's Summit, Missouri 64086 USA
(816) 524-5382 ♦ FAX (816) 524-5480 ♦ www.sterlingdeaerator.com

2.9.2 External Preparation

Application and dry film thickness are to be in accordance with the manufacturer's recommendations for the paint selected. In selecting the type of external preparation, consideration must be given to the environmental conditions and maintenance provisions available. Exposure environments arranged in order of increasing severity are as follows:

A. Dry interior climate or arid regions.
B. Rural or light industrial areas.
C. Frequently wet climates.
D. Continuously wet climates.
E. Corrosive areas.

Paint systems for exposure A usually consists of a single coat of Red Oxide Primer.

For the remaining exposures, paint systems would normally consist of one or two coats of rust inhibiting primer and one or two finish coats depending on the severity of the conditions. Before selecting painting systems and materials for exposures C through E, consideration must be given to the specific climate conditions at the storage site.

Where day/night temperature changes exceed 30°F (16.7ºC), special attention should be given to the preparation of the metal surface and selection of the primer paint.

Under these conditions, the metal surfaces should be blast cleaned to remove all mill scale which might otherwise flake off due to expansion and contracting of the vessel.

The type of primer and finish system selected should be compatible with the particular expansion characteristics of the vessel and the final operating temperatures. Suggested Paint Systems are as follows:

	Primer Coat		Finish Coat	
Exposure	**First Coat**	**Second Coat**	**First Coat**	**Second Coat**
A Dry Interior climate or arid regions	Red Oxide	Not Required	Not Required	Not Required
B Rural or light industrial areas	Inorganic Zinc	Not Required	Not Required	Not Required
C Frequently wet climates	Inorganic Zinc	Inorganic Zinc	Not Required	Not Required
D Continuously wet climates	Inorganic Zinc	Inorganic Zinc	Customer Preference	Not Required
E Corrosive areas	Inorganic Zinc	Inorganic Zinc	Customer Preference	Customer Preference

Sterling Deaerator Company
500 NE Colbern Road, Suite 200 ♦ Lee's Summit, Missouri 64086 USA
(816) 524-5382 ♦ FAX (816) 524-5480 ♦ www.sterlingdeaerator.com

2.9.3 Maintenance Requirements

Short-term Storage (Up to 12 Months)

The absorption material should be checked after three (3) months and then monthly thereafter. Expanded material is replaced as required.

The exterior portions of the shell are to be visually inspected periodically.

Long-term Storage (Over 12 Months)

The inert gas cylinders and vessel must be checked weekly for any loss of pressure and replaced as required.

The exterior portions of the shell are to be visually inspected periodically and the finish repaired as required using the finish paint specified.

2.9.4 Suggested Prime and Finish Coats

Primer Coat

Red Iron Oxide - Sherwin-Williams Company
Inorganic Zinc - Carboline Corporation

Finish Coat

Polyamide Epoxy - Porter Company Zinc-Lock No. 500 Series

Sterling Deaerator Company
500 NE Colbern Road, Suite 200 ♦ Lee's Summit, Missouri 64086 USA
(816) 524-5382 ♦ FAX (816) 524-5480 ♦ www.sterlingdeaerator.com

3. Design Specification ~ Drawings

AMATA ABPR5 SDC JOB: 2014-6192
THAILAND
P.O. NO: V00104349 ~ VPI NO.: V17491
TAG NO.: LAA10BB002; LAA10BB001
VOGT POWER INTERNATIONAL
LOUISVILLE, KENTUCKY, USA

MODEL NO: 96 VTHS-5237-10Ø1810
ASME SECTION VIII, DIV I

HEATER VESSEL:	**STORAGE VESSEL:**
2438 mm (8'-0") OD Heads	3048 (10'-0") mm OD Heads
1524 mm (5'-0") Shell Tan-Tan Length	5740 mm (18'-10") Shell Tan-Tan Length
12.7 mm (0.5") Shell Thickness	12.7 mm (0.5") Shell Thickness
12.7 mm (0.5") Head Thickness	12.7 mm (0.5") Head Thickness
SA-516-70 Head/Shell Material	SA-516-70 Head/Shell Material

Design Pressure (Internal):	7.03 kg/cm²g (100.00 psig) Full Vacuum
Design Temperature (Heater/Storage):	260.0°C (260.0°C Steam) (500°F (500°F Steam)
Operating Pressure:	1.22 kg/cm²abs (17.40 psia)
Operating Temperature:	105°C (221°F)
Outlet Capacity:	355,637 lbs/hr (161,313 kg/hr)
Storage Capacity:	10 minutes flow from NWL to Empty

Oxygen Guarantee: 0.005 ml/l (7 ppb)

Spray Valves: 316-L S.S. / Quantity: 12
Trays: 37" Length / 430 S.S. / Quantity: 80

Reference Drawings:

A-6192-1	*Rev. 1*	*Nameplate Drawing*	*V17491-DAXD-500*
A-6192-2	*Rev. 1*	*Vogt Nameplate Drawing*	*V17491-DAXD-503*
C-6192-1	*Rev. 1*	*General Notes & Nozzle Schedule*	*V17491-DAXD-501*
D-6192-1	*Rev. 1*	*Outline Drawing*	*V17491-DAXD-502*
6192-BOM	*Rev. 2*	*Bill of Material*	*V17491-DAXA-501*

STERLING DEAERATOR CO.

TAG NO.: LAA10BB00X

JOB NO. 6192

NOTE

1) FABRICATOR SHALL STAMP (1) NAMEPLATE (DEAERATOR TAG) AS SHOWN BELOW:
DEAERATOR: TAG NO.: LAA10BB002
FABRICATOR SHALL STAMP (1) NAMEPLATE (STORAGE TAG) AS SHOWN BELOW:
STORAGE TANK: TAG NO.: LAA10BB001

2) THIS IS NOT THE ASME NAMEPLATE. THE ASME NAMEPLATE SHALL BE SUPPLIED BY THE VESSEL FABRICATOR.

3) ALSO SEE A-6192-2 (VPI DWG. NO.: V17491-DAXD-503).

STERLING NAMEPLATE STAMPING

1 AMATA ABPR5
ABPR5 COMBINED CYCLE COGENERATION
PLANT PROJECT, THAILAND
VOGT POWER INTERNATIONAL
CLIENT P.O. NO.: V0010434

Dwg #	Date	REV.1	DET
A-6192-1	10-19-16	11-3-16	
Drawn By DET	Checked By RJA	Scale 1" = 1"	Approved By SRW

Sterling Deaerator Company
500 N.E. Colbern Road, Suite 200, Lee's Summit, MO 64086
Phone: (816) 524-5382 Fax: (816) 524-5480
www.sterlingdeaerator.com

INFORMATION ON THIS DOCUMENT IS CONFIDENTIAL OR PROPRIETARY AND SHALL NOT BE USED OR REPRODUCED IN WHOLE OR IN PART WITHOUT WRITTEN AUTHORIZATION OF STERLING DEAERATOR COMPANY. ALL RIGHTS RESERVED.

VPI DWG NO: V17491-DAXD-500

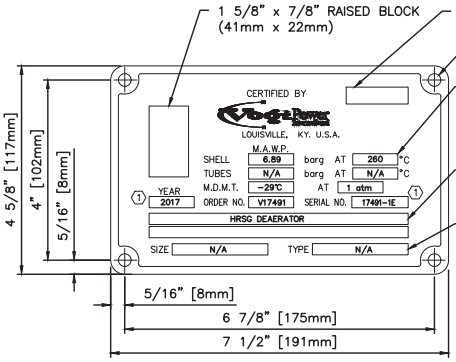

NOTE:

-NAMEPLATE TO HAVE SILVER BLANK BLOCKS WITH BLUE BACKGROUND

-NAMEPLATE BLANKS PROVIDED BY VOGT POWER INTL.

MATERIAL:

-20 GA. TYPE 304 S.S. PLATE

HRSG NAME PLATE FOR DEAERATOR

1 AMATA ABPR5
ABPR5 COMBINED CYCLE COGENERATION
PLANT PROJECT, THAILAND
VOGT POWER INTERNATIONAL
CLIENT P.O. NO.: V0010434

Dwg #	Date	REV.1	DET
A-6192-2	10-19-16	11-3-16	
Drawn By DET	Checked By RJA	Scale 1:2	Approved By SRW

Sterling Deaerator Company
500 N.E. Colbern Road, Suite 200, Lee's Summit, MO 64086
Phone: (816) 524-5382 Fax: (816) 524-5480
www.sterlingdeaerator.com

INFORMATION ON THIS DOCUMENT IS CONFIDENTIAL OR PROPRIETARY AND SHALL NOT BE USED OR REPRODUCED IN WHOLE OR IN PART WITHOUT WRITTEN AUTHORIZATION OF STERLING DEAERATOR COMPANY. ALL RIGHTS RESERVED.

VPI DWG NO: V17491-DAXD-503

GENERAL NOTES:

1) CONSTRUCTION PER ASME SECTION VIII, DIV. 1 2015 EDITION, WITH STAMP.

2) DESIGN:
PRESSURE (NT): 7.03 kg/cm²g [100.00 PSIG]
PRESSURE (OT): 10.54 kg/cm²g [150.00 PSIG]
TEMPERATURE: 260.0°C (260.0°C STEAM) [500°F (500°F STEAM)]
OPERATING PRESSURE: 1.22 kg/cm²abs [17.40 PSIA]
OPERATING TEMPERATURE: 105 °C [221°F]
HYDROTEST PRESSURE: 9.14 kg/cm²g [130.00 PSIG]

3) NDE REQUIREMENTS:
RADIOGRAPHY:
LONG. SEAMS: 100%
CIRC. SEAMS: 100%
MT OR PT: ON INTERNAL NOZZLE WELDS ONLY

4) CORROSION ALLOWANCE INCLUDED: 3.18 mm [0.125"]

5) HEAD MATERIAL: SA-516-70 SHELL MATERIAL: SA-516-70

6) STRESS RELIEF: 1 STAGE PWHT @ 607°C ± 14°C

7) HEADS: 2:1 ELLIPTICAL

8) ALL MATERIAL FOR NOZZLES SHALL CONFORM TO CUSTOMER SPECIFICATION AND A SUITABLE ASME SPECIFICATION.

9) ANY PIPE FABRICATED FROM ROLLED PLATE SHALL CONFORM DIMENSIONALLY TO CUSTOMER SPECIFICATION AND TO WELDED PIPE SPECIFICATION ASME SA-53

10) SURFACE PREPARATION:
(INTERNAL) SSPC-SP6 COMMERCIAL BLAST (NO SILICA) W/ VpCI609 APPLIED AFTER HYDROTEST.
(EXTERNAL) SSPC-SP6 COMMERCIAL BLAST THEN PRIMER COAT WITH INTERPRIME 198, 50-75 MICRONS. WELDABLE PRIMER SHALL BE APPLIED ON THE LAST 4" OF EACH SA-53 NOZZLE.

11) UNLESS NOTED OTHERWISE, ALL FLANGE BOLTING SHALL STRADDLE LONGITUDINAL VESSEL CENTERLINES.

12) UNLESS NOTED OTHERWISE, INTERNAL NOZZLE PROJECTION SHALL NOT EXCEED LENGTH REQUIRED FOR NOZZLE REINFORCEMENT.

13) UNLESS NOTED OTHERWISE, ALL PIPING FOR ACCESSORIES SHALL BE SUPPLIED BY OTHERS.

14) UNLESS NOTED OTHERWISE, ALL FOUNDATION AND CONNECTION BOLTING SHALL BE SUPPLIED BY OTHERS. BOLTING BETWEEN TANKS SHALL BE SUPPLIED BY FABRICATOR.

15) UNLESS NOTED OTHERWISE, ALL 3000# RATED NOZZLES SHALL BE FULL COUPLING.

16) UNLESS NOTED OTHERWISE, ALL PIPE FOR NOZZLES SHALL BE ASME SA-106-B.

17) ALL CONNECTIONS SHALL BE SUITABLY PREPARED FOR SHIPMENT TO PREVENT CORROSION OR DAMAGE. HYDROTEST BLANKS SHALL BE REMOVED PRIOR TO SHIPMENT.

18) NO ASBESTOS OR ASBESTOS BEARING MATERIAL IS ALLOWED.

19) NOZZLES SHALL HAVE FULL PENETRATION ATTACHMENT WELDS.

20) FLATBAR 6 x 65 [0.25 x 2.50"] SKIP WELDED TO THE HORIZONTAL CENTERLINE OF STORAGE TANK, WITH RINGS ON EACH HEAD (ø9.5 [0.38"] ROLLED ROD WITH OUTSIDE DIA. OF 450 [18"]) CENTERS. FOR 65 [2.5"] THICK INSULATION. INSULATION BY OTHERS.

21) 1" 3000# NPT COUPLING USED CENTERED IN THE SHELL. EXTERNAL END TO BE MACHINED OUT TO 1" SOCKET WELD (6.35" x 5/8"). NOZZLE MAY BE PLUGGED FROM THE INSIDE DURING HYDRO TEST.

NOZZLE SCHEDULE

MARK	QUAN	NOMINAL SIZE	ENDPREP /RATING	STYLE	MATERIAL	CUST PIPING SCH.	DESCRIPTION	REMARKS
A	1	8"	DET "A"	BW	304-L-SS	40	CONDENSATE/MAKE-UP INLET	USE CS SAFE END
B	1	14"	DET "A"	BW	C.S.	40	PEGGING STEAM INLET	W/BAFFLE
D	1	8"	DET "A"	BW	C.S.	40	STORAGE FLASH INLET	W/T. BAFFLE
E	1	8"	DET "A"	BW	C.S.	40	HP/LP PUMP SUCTION OUTLET	W/VORT. BRKR.
F	1	3"	DET "A"	BW	304-L-SS	40	VENT	
G	1	3/4"	3000#	SW	C.S.	---	PRESSURE GAUGE	
H	1	3/4"	3000#	SW	C.S.	---	NITROGEN PURGE	
J1, J3	2	1"	3000#	SW	C.S.	---	TEMPERATURE GAUGE	SEE NOTE 21
J2	1	1"	3000#	NPT	C.S.	---	TEMPERATURE GAUGE	WITH PLUG
K	1	1"	3000#	SW	304-L-SS	---	CHEMICAL FEED	W/PLUG
LG(1-2)	2	1 1/2"	3000#	SW	C.S.	---	BRIDLE (LEVEL GUAGE)	
LT(1-6)	6	1"	3000#	SW	C.S.	---	BRIDLE (LEVEL TRANSMITTER)	
P(1-3)	3	2 1/2"	3000#	SW	C.S.	*	HP PUMP RECIRC	W/T. BAFFLE
P(4-6)	3	1 1/2"	3000#	SW	C.S.	*	LP PUMP RECIRC	W/T. BAFFLE
Q	1	18"	----	FLG'D	C.S.	---	MANWAY (TRAY ACCESS)	W/HINGE
R	1	18"	----	FLG'D	C.S.	---	MANWAY	W/HINGE
S	1	6"	600#	RFSO	C.S.	---	SAFETY VALVE	
U	1	24"	DET "A"	BW	C.S.	---	DOWNCOMER/EQUALIZER	W/BAFFLE
W	1	3"	DET "A"	BW	C.S.	40	DRAIN	FLUSH

* CUSTOMER NOTED PIPE SCHEDULE AS 40

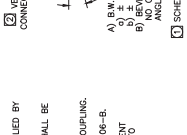

A) B.W. END PREPARATION TO BE IN PLANE WITHIN ;
a) ± 1.6 [1/16"] FOR PIPE SIZES UP TO DN150 [6"] DIA.
b) ± 2.4 [3/32"] FOR PIPE SIZES OVER DN150 [6"] DIA.
B) BEVELED SURFACES SHALL BE EVEN WITH INDENTATIONS NOT EXCEEDING 1.6 [1/16"] DEPTH AND WITH A TOTAL ANGLE OF INDENTATIONS SHOULD NOT BE LESS THAN 120°

DETAIL "A"
BW END PREP

REFERENCE: D-6192-1 FOR OUTLINE OF DEAERATOR

GENERAL NOTES & NOZZLE SCHEDULE
161311 kg/hr
355,650 LBS/HR

1 AMATA ABPR5
ABPR5 COMBINED CYCLE COGENERATION
PLANT PROJECT, THAILAND
VOGT POWER INTERNATIONAL
CLIENT P.O. NO.: V0010434

Dwg #	Date	REV.1	DET
C-6192-1	10-19-16	11-3-16	
Drawn By DET	Checked By RJA	Scale 1"=1'	Approved By SRW

Sterling Deaerator Company
500 N.E. Colbern Road, Suite 200, Lee's Summit, MO 64086
Phone: (816) 524-5382 Fax: (816) 524-5480
www.sterlingdeaerator.com

VPI DWG NO: V17491-DAXD-501

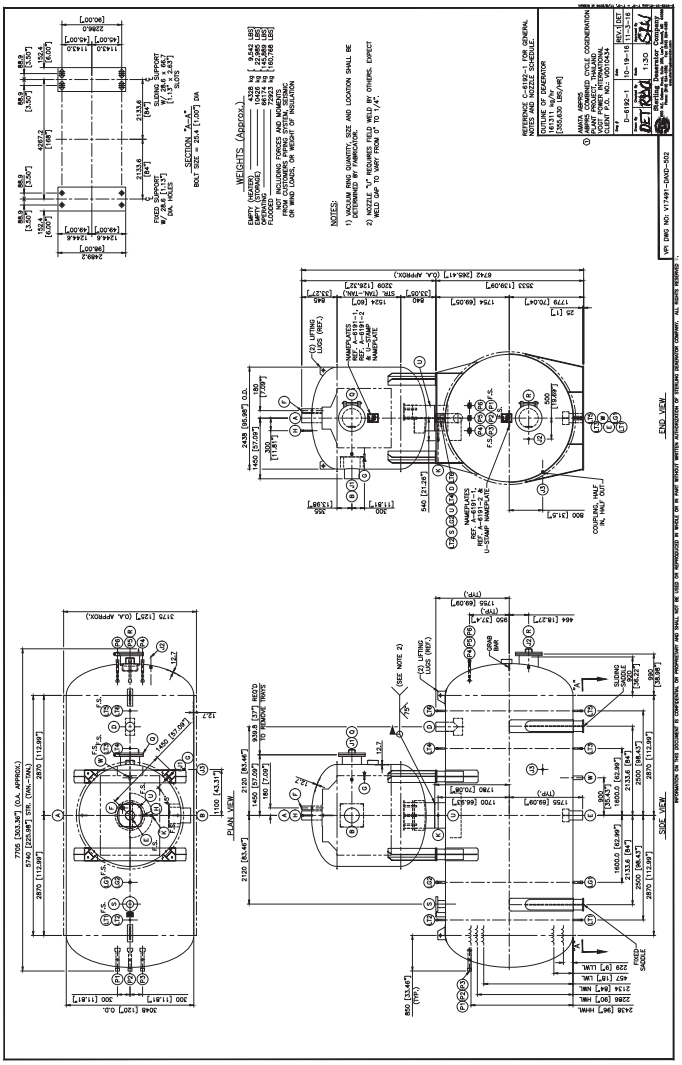

4. Deaerator Apparatus

4.1 Accessories

The Bill of Material lists all accessories purchased with the deaerator. This could include any of the following: control valves and level controllers, gauge glasses, water thermometers, steam thermometers, steam pressure gauges, oil separators, oxygen test equipment, level or pressure recorders, relief valves, piping, etc. Sterling Deaerator furnishes only that equipment listed on the engineering Bill of Material. For operating any of the accessories or auxiliary equipment supplied with the deaerator, refer to separate instructions in this section, and to the accessory equipment which is contained elsewhere in this manual.

ACCESS

CAUTION: BEFORE ANY ENTRY OR ACCESS TO THIS VESSEL, REFER TO THE SAFETY SECTION OF THIS MANUAL.

Provisions should be made for platforms or ladders so that various valves, controls, and instruments are accessible to the operator. Manholes should be accessible for internal inspection of the equipment.

4.2 Piping Connections

Prior to connecting the deaerating heater to the piping, the heater and storage tank should be bolted firmly to the foundation and the interior should be inspected to ascertain that all interior parts are in position and working order.

When connecting steam and water lines to the heater, care should be exercised in the piping arrangement. Include expansion joints, if necessary, to avoid imposing excessive piping loads upon the shell. Isolating gate valves in these lines are desirable, as they allow for complete isolation for cleaning or repairing, and are bypassed around inlet control valves or steam pressure reducing valves.

Piping should be supported independently to avoid loads from being exerted upon the heater or storage shell or any nozzles.

The pump suction line should be as large as practical and the use of sharp angle bends should be avoided. The line should be as direct to the boiler feed pump suction as possible. Vent piping should be installed with care to avoid any traps or pockets. A vertical line, short as possible, is best. A gate valve should be installed in this line. An alternative to this would be a gate valve with a pipe cap mounted above the valve. This pipe cap should be drilled with an orifice that

will allow sufficient venting. This method is most feasible for a system that would have a fairly uniform amount of noncondensable gasses venting from it. Care must also be taken to avoid closing the gate valve at any time except for maintenance or change of the orifice.

The drain line should be piped to waste and all of the connections made in accordance with the outline drawings using usual piping practice.

Sampling lines should be installed using extreme care to avoid leakage of air into the line. For a full description of the installation of sampling lines, refer to the section under Oxygen Testing.

4.3 Relief Valves

Relief valves, when furnished, are not designed to prevent excess pressure in the steam line. They are designed to relieve excess pressure which might occur in the deaerating heater when steam is flashed from high temperature waters returned to the heater in the form of trapped discharges, condensate returns, etc. These relief valves are sentinel type valves.

Main steam line should be protected external to the deaerating heater to avoid over pressuring from any cause. They must be sized to completely remove any steam formed from pressure reducing stations, or other control devices, which may be installed between the deaerating heater and point of supply. They must also be capable of relieving the complete volume of steam flowing to the deaerating heater.

Normally, the relief valves supplied have a release, and it is recommended that occasionally this release be manipulated to check free movement and to avoid freezing of the valve seat. This can also be opened when starting the deaerating heater to relieve displaced air when filling the unit.

WARNING: THE DISCHARGE FROM THESE VALVES CAN CAUSE SEVERE INJURY. PERSONNEL PROTECTION SHOULD BE INSTALLED BY THE OWNER OR OPERATOR. REFER TO THE SAFETY SECTION OF THIS MANUAL.

4.4 Vacuum Breakers

Vacuum breakers are occasionally supplied to protect shells from external pressure where the vessel has not been designed to withstand this force. When a vacuum breaker opens, there is a definite malfunction within the deaerating heater, as normally this vacuum breaker should never open. It will only open when there is an insufficient supply of steam. Water going to service during these times could conceivably contain dissolved oxygen.

Vacuum breakers which are supplied are steam tight, suitable for the design pressure of the vessel, and are set to open at the slightest vacuum. These should be checked periodically to insure that the seats have not frozen or allowed to become excessively dirty.

4.5 Thermometers

Thermometers are supplied only when ordered and then they are usually of the indicating type. They are installed to indicate the temperature within the storage tank. The thermometer wells are usually of the separable socket type with extension neck and with union connections. It is possible to remove the thermometer for calibration without reducing the pressure in the deaerating heater. For special installations, indicating, remote, or recording, instruments can be supplied. Temperatures external to the heater often supply useful information. This would be the temperature of any water stream coming to the heater, temperature of steam to the heater, and the temperature of the water at the boiler feed pump.

4.6 Pressure Gauges

Pressure gauges are only supplied when ordered and are usually of the bourdon tube type which are used to indicate the steam pressure. A siphon should be installed between the vessel and the gauge to insure accurate reading of the gauge. The gauge is usually installed to indicate steam pressure in the shell of the deaerating heater. On special installations or where specifically required for remote control, indicating or recording pressure gauges can be supplied.

It is often useful to have pressure at sources external to the heater should information ever be required, such as pressure upstream of the inlet control valves, steam header piping and feed pump suction.

4.7 Other Equipment

For a description of the other equipment sometimes furnished with deaerators, such as inlet valves and controllers, overflow valves and controllers, tray banks, spray valves, etc., refer to the appropriate sections of this manual which outline installation and operating procedures to be used.

4.8 Maintenance and Inspection

Normally, deaerating equipment requires relatively minimal maintenance. The operation should be completely automatic. For normal operation, little or no maintenance is required, except for the usual attention required for instrumentation and controls.

Complete annual inspection should be made of this equipment. In plants where duty is unusually severe, or abnormal water supplies are used, inspection should be required semi-annually or more frequently.

CAUTION: BEFORE ANY ENTRY OR ACCESS TO THIS VESSEL FOR INSPECTION PURPOSES, REFER TO THE SAFETY SECTION OF THIS MANUAL.

These inspections should include the following:

a. Internal inspection for evidence of corrosion, scaling, cracking, or broken or worn parts.
b. Spray Valve: Valve must seat firmly. Check the plug for debris. Valve nuts should be tight with no evidence of leakage under gasket. If a disc appears to hang down, the spray valve can easily be adjusted by removing it from the tank, loosening the top hex nut and hand tighten the spring retainer until the valve disc just seats, then turn one-quarter turn more. Tighten top hex nut firmly and reinstall.
c. Spray Nozzle: Should likewise be checked for foreign matter and see that all holes are clean and clear.
d. Check manhole gasket, replace if there is evidence of leaks or deterioration of the gasket.
e. Check operation of all controllers; they should move freely and not have excessive play. Make any necessary adjustments, paying particular attention to the overflow valve and controller as this is not used frequently and may have a tendency to corrode and freeze into position.
f. Open and close all gate valves that have not been used since last inspection. Lubricate when necessary.
g. Recalibrate thermometers, pressure gauges and any other instruments.
h. Inspect insulation.
i. After unit is returned to service, oxygen testing should be performed with more frequency to ascertain that the vent setting is correct.

Sterling Deaerator Company
500 NE Colbern Road, Suite 200 ♦ Lee's Summit, Missouri 64086 USA
(816) 524-5382 ♦ FAX (816) 524-5480 ♦ www.sterlingdeaerator.com

4.9 Bill of Material

AMATA ABPR5
VOGT POWER INTERNATIONAL
P.O. NO.: V0010434 ~ PROJECT NO.: V17491
TAG NO's.: LAA10BB002 – DEAERATOR AND LAA10BB001 – STORAGE TANK

STERLING JOB NO.: 2014-6192

BILL OF MATERIAL
DOCUMENT NO.: 6192-BOM
STERLING REVISION: 1

V17491-DAXA-501

REVISION	DATE	DESCRIPTION	BY	CHECKED	APPROVED
0	14-Oct-16	ORIGINAL RELEASE	SRW	RGA	SDR
1	3-Nov-16	Revise per mark-up Job Name	SRW	RGA	SDR

Sterling Deaerator Company
500 NE Colbern Suite 200 • Lee's Summit, MO 64086
(816) 524-5382• www.sterlingdeaerator.com

BILL OF MATERIAL
6192-BOM.xls
PAGE 1 of 1

ITEM	QTY	TAG NO'S	DESCRIPTION	SIZE	DWG	PART NO	MAT'L	SUPPLIED BY	NOTES
1	1	LAA10BB002	SPRAY-TRAY DEAERATING HEATER	161,311 kg/hr 2,438 mm OD X 4,572 mm (TAN-TAN)	D-6192-1 C-6192-1	98 VTHS-S23/-fcur810	SA-516-70	STERLING/ Unimit	ALL NUTS/BOLTS AND GASKETS FOR ANY ACCESSORY ITEM (EXCEPT AS LISTED BELOW) SUPPLIED BY OTHERS ITEMS LISTED BELOW SHALL BE SHIPPED LOOSE WITH ALL PIPING, EXCEPT AS NOTED, BY OTHERS SEE DETAIL DRAWINGS FOR PIPING INFORMATION
1		LAA10BB001	STORAGE OPERATING PRESSURE: 1.22 kg/cm²abs OPERATING TEMPERATURE: 105 °C STORAGE CAPACITY: 10 minutes flow from NWL to Low Trip OXYGEN GUARANTEE: 0.005 MLL (7 PPB) CONSTRUCTION CODE: ASME SECT VIII, DIV. 1, 2015 and HEI COMPLIANT DESIGN PRESSURE, INTERNAL / EXTERNAL: 7.03 kg/cm²g/FULL VACUUM DESIGN TEMPERATURE: 260.0°C (260.0°C Steam)	3,048 mm OD X 5,740 mm (TAN-TAN)					
2	12		SDC SPRAY VALVES			PN400	316L SS	STERLING	INSTALLED PRIOR TO SHIPMENT
3	80		SDC 37" LENGTH TRAY ASSEMBLIES	37"L x 11"W x 4"H		PN402-37	430 SS	STERLING	INSTALLED PRIOR TO SHIPMENT
4	2		NAMEPLATE SDC	4" X 7"	A-6192-1		304 SS	STERLING	STERLING DEAERATOR COMPANY
4.5	2		NAMEPLATE VOGT	4" X 7"	A-6192-2		304 SS	UNIMIT	STERLING DEAERATOR COMPANY
5	2		TAG WARNING MANWAY ENTRY	3" X 5"	SA-113	PN452	304 SS	STERLING	
6	1		TAG WARNING SAFETY VALVE	3" X 5"	SA-114	PN454	304 SS	STERLING	
7	1		ORIFICE PLATE	3" 150#RF	A-6192-3	PNO-3150	304 SS	UNIMIT	with 0.5" orifice

Sterling Deaerator Company
500 NE Colbern Road, Suite 200 ♦ Lee's Summit, Missouri 64086 USA
(816) 524-5382 ♦ FAX (816) 524-5480 ♦ www.sterlingdeaerator.com

4.10 Spare Parts

AMATA ABPR5
VOGT POWER INTERNATIONAL
P.O. NO.: V0010434 ~ PROJECT NO.: V17491
TAG NO's.: LAA10BB002 – DEAERATOR AND LAA10BB001 – STORAGE TANK

STERLING JOB NO.: 2014-6192

RECOMMENDED SPARE PARTS
DOCUMENT NO.: 6192-SP
STERLING REVISION: 1

V17491-DAXA-503

REVISION	DATE	DESCRIPTION	BY	CHECKED	APPROVED
0	14-Oct-16	ORIGINAL RELEASE	SRW	RGA	SDR
1	3-Nov-16	Revise per mark-up Job Name	SRW	RGA	SDR

Date Prepared: 14 Oct 2016
Pricing Valid Until:31 Dec 2017

Recommended Spare Parts
Vendor Name:
Sterling Deaerator

Ref. Vogt Power Purchase Order	Assembly Description / VPI Tag No.	Vendor Spare Part Description	Vendor Part Number	Recommended Qty. for Start Up	Recommended Qty. for Normal Operation - 2 Yrs.	Normal Lead Time (Wks)	Shelf Life (Yrs)	Unit Price ($US)
V0010434	17491-1E	SDC SPRAY VALVES	PN400	0	1	4	5	$ 251.00
V0010434	17491-1E	SDC 37" LENGTH TRAY ASSEMBLIES	PN402-37	0	10	4	5	$ 211.00
V0010434	17491-1E	18" Round Manway Gasket	PN418	2	2	4	5	$ 137.00

Vogt Power Form No. AFP-19.002-03

4.11 Troubleshooting Guide

1. High 0_2

Possible Causes	*Comments or Possible Solutions*
- Air in-leakage	
- Insufficient stabilization period*	
- Trays upset	
- Not steady state conditions*	
- O_2 inlet not in accordance with specified Design conditions	
- Spray valves	- Check for broken spring - Check for worn components or debris
- Water inlet temperature too low	
- Improper venting	- Check vent lines for obstructions and Adequate design
- Incorrect testing	- Loose fittings - Shut scavenger off - Remove chemical interferences
- Operation outside of design conditions	- Verify design conditions - Shut scavenger off

*** Often, high oxygen measurements can be traced to inadequate test procedures. In order to conduct a proper test, it is important that there be a sufficient stabilization period and steady state conditions. The proper length of a stabilization period is extremely dependent on system-specific conditions, particularly the size of the system. As a general rule, if there is a downward trend in oxygen content measurements, steady state condition has not yet been attained.**

2. Excessive Pressure Fluctuation

Possible Causes	*Comments or Possible Solutions*
- Inlet steam pressure too high or too low	
- Excessive inlet temperature variation	- Keep within design range
- Steam PRV Improperly Sized or Calibrated	- Check Size and Calibration

Sterling Deaerator Company
500 NE Colbern Road, Suite 200 ♦ Lee's Summit, Missouri 64086 USA
(816) 524-5382 ♦ FAX (816) 524-5480 ♦ www.sterlingdeaerator.com

Troubleshooting Guide, Continued:

3. Low Outlet Temperature

Possible Causes	*Comments or Possible Solutions*
- Incorrect thermometer reading	- Check calibration
- Insufficient steam flow	- Check steam supply - Check for restrictions
- Incorrect steam/water ratio	- Check heat and mass balances
- Spray valves or internals malfunctioning	- Check spray valves, trays, etc.
- Heater flooding	- Check all valve and control settings
- Inlet flows piped incorrectly	- Check all inlet flows and temperatures

4. Water Hammer

Possible Causes	*Comments or Possible Solutions*
- Inlet flows mixing just prior to deaerator inlet	- Mix flows farther upstream of deaerator
- Improper pipe design	- Check and/or redesign
- High inlet velocities	

5. High CO_2

Possible Causes	*Comments or Possible Solutions*
- High CO2 at inlet	- Verify CO2 design condition
- High pH	- Lower pH
- Improper venting	- Review vent system

6. Tray Upsets

Possible Causes	*Comments or Possible Solutions*
- Tray hold down not secure	- Install correctly
- Flashing	- Gradual increase/decrease of controlled flows

7. Unexpected Storage Tank Level Excursions

Possible Causes	*Comments or Possible Solutions*
- Malfunctioning level control system	- Check setting and system operation
- Malfunctioning overflow or improper boiler feed pump operation	- Check overflow level and boiler feed pump operation
- Pressure fluctuations	

Sterling Deaerator Company
500 NE Colbern Road, Suite 200 ♦ Lee's Summit, Missouri 64086 USA
(816) 524-5382 ♦ FAX (816) 524-5480 ♦ www.sterlingdeaerator.com

5. Manufacturer's Data Reports:

NOTE: SEE DOCUMENT NO.: 6192-MTR REV. 0 MANUFACTURER'S TEST REPORTS

Please refer Factory Test Reports [ABPR5-G-S-HA-8026] Volume 5, V17491 DAXJ-515

Vogt Power International

OPERATION & MAINTENANCE MANUAL

For

Vogt Power International Inc.
Heat Recovery Steam Generators

For

ABPR5 Combined Cycle Cogeneration Plant Project
Amata B. Grimm Power (Rayong) 5 Limited

Vogt Power Project No. 17491

Vogt Power Document No. V17491-OMNE-006

VOLUME 6

OPERATION & MAINTENANCE MANUAL

OPERATION AND MAINTENANCE MANUAL
13551 TRITON PARK BLVD, SUITE 2000
LOUISVILLE, KENTUCKY 40223 USA

[illegible]

This document contains minimum procedures for operating and maintaining the HRSG components and is intended to assist the operators in planning and scheduling operational and maintenance activities. It is not intended to and does not cover all details or variations in equipment, or provide for every possible contingency.

INDEX

VOLUME 1 – Vogt Power HRSG O&M Manual

SECTION I DESIGN DATA

[illegible]

SECTION II OPERATIONAL PROCEDURES

[illegible]

SECTION III COMMISSIONING PROCEDURES

[illegible]

OPERATION AND MAINTENANCE MANUAL
13551 TRITON PARK BLVD, SUITE 2000
LOUISVILLE, KY 40223 USA

SECTION IV SUBVENDOR MANUALS

Volume 2 – Divert Damper

Volume 3 – Valves and Inline Components

[illegible]

Volume 4 – Instrumentation

[illegible]

Volume 5 – Deaerator & Heat Exchanger

[illegible]

Volume 6 – Miscellaneous Equipment

[illegible]

TABLE OF CONTENTS

Section	Description	Page
1.0	INTRODUCTION	3
2.0	RECEIVING AND STORAGE	3 & 4
3.0	INSTALLATION INSTRUCTIOINS	5, 6 & 7
4.0	MAINTENANCE	7

1.0 INTRODUCTION

Flue Gas Solutions, Inc. B-STYLE Fabric Expansion Joints have been designed to absorb customer specified axial and lateral movements, including continual vibration, at gas temperatures specified by the customer.

The B-Style expansion joint fabric is supplied with factory hot-molded corners that mate with the duct flanges. They are shipped rolled and taped to reduce the shipping volume with clamping bars, fasteners, gasket and bolt in or weld in liners if required by the customer. Installation of this style requires minimal equipment and manpower.

2.0 RECEIVING AND STORAGE

Flue Gas Solutions, Inc., B-STYLE Fabric Expansion Joints have been prepared at the factory for short periods of outside storage. There are several precautions that should be taken to ensure that no damage is incurred during the storage period.

2.1 RECEIVING INSPECTION

Expansion joints must be packaged to arrive at the jobsite in good condition. The purchaser should, immediately upon receipt at the jobsite, verify that all parts shown on the packing list have been received undamaged. To insure proper performance and service life it is important to prevent damage by carefully handling and storing the expansion joint prior to installation.

2.2 PLACEMENT IN STORAGE

The storage environment and storage time is an important factor in the condition and performance of fabric expansion joints. The materials used in fabric expansion joints exhibit excellent resistance to various forms of environment attack; however, recommended storage practices must be observed and an awareness of deviations must be maintained. After prolonged storage (over one year), inspection by the supplier/manufacturer can assure that performance will not be affected. In case of storage abuse, expansion joint warranties are invalid. Special storage methods should be used when long-term field storage is anticipated for spare expansion joints.

2.3 LENGTH OF STORAGE

The storage warranty period is one year. Notify the supplier/manufacturer if storage period exceeds one year. Inspections should be made at least (60) days before anticipated installation. Notify the manufacturer if the start-up date is to be more than (12) months after the installation of the expansion joints. Notify the manufacturer if any unusual appearances are noticed when unpacking or installing the expansion joints.

2.4 INDOOR STORAGE RECOMMENDATIONS

Do store the expansion joints in their original shipping containers.
Do protect the containers from physical abuse.
Do store in cool and dry areas.
Do Not store where the temperature will exceed 150° F (65°). The ideal storage temperature is between 50° and 70° F (10° to 20° C). Expansion joints should not be stored near sources of heat such as radiators and base board heaters.

2.5 OUTDOOR STORAGE RECOMMENDATIONS

Do store the expansion joints in their original shipping containers.
Do protect the containers from physical abuse.
Do store at least one (1) foot above the ground in a cool dry area where flooding will not occur.
Do cover the containers with tarpaulin or heavy plastic to protect them from the weather.
Do Not store where the temperature will exceed 150° F (65°). The ideal storage temperature is between 50° and 70° F (10° to 20° C). Expansion joints should not be stored near sources of heat.

3.0 INSTALLATION INSTRUCTIONS

3.1 PRE-ERECTION REQUIREMENTS

The breach opening and ducting should be checked for proper alignment. The opening should not exceed the following tolerances; Axial +1/4", -1/2; Lateral ½" If the breach opening exceeds these tolerances then the expansion joint manufacturer must be notified. Mounting flanges or the expansion joint attachment area of the ductwork must be clean, flat and parallel. All welds must be ground smooth at attachment points. The area around the ductwork must be cleared of any sharp objects and protrusions. If not removable they should be marked for avoidance. The expansion joint and components should be kept packaged until immediately before installation. If any handling devices such as crane hooks or forklifts are utilized in handling the expansion joints, cushioning materials must protect the contact surface. If weld or burn operations are being performed in the vicinity of the exposed expansion joint, fabric welding blankets or other protective covering must be used. These covers must be removed before start-up.

3.2 INSTALLATION

It is important that the expansion joints be installed at the proper face-to-face dimension as specified by the manufacturer. Never extend, compress or laterally distort expansion joints to compensate for dimensional errors without the manufacturers concurrence. When an expansion joint must be compressed or laterally preset, call the manufacturer for detailed instructions for installation. All expansion joints provided with baffles or flow liners will have flow arrows for assisting the installer to properly orient the expansion joint flow direction. Care must be taken to assure back up bar ends closely butt up to each other (within 1/8") and DO NOT overlap. Install the expansion joint fasteners to the torque shown on the drawings or (25 to 35 FT-LB). If impact tools are used then they must have torque-limiting devices properly set before use. DO NOT install insulation over the expansion joint or mounting areas unless it is in accordance with the manufacturer's instructions. In areas where spontaneous combustion dust can accumulate on the fabric, protective shields may be required. Consult the manufacturer for details and requirements for a shield. Improperly installed shields may help elevate the temperature of the fabric and cause premature failure. Proper installation of the expansion joint is critical to the service life of the product and should be checked by the installer.

3.2.1 GASKET (Low Temperature <600° F.

The common gasket for the thin Texfilm/TEX-LFP materials is the PTFE joint sealant gasket tape. It is a white material usually supplied with adhesive backing for ease of installation directly to the mating flange. Remove the adhesive protective strip and apply the gasket on the cleaned duct flanges to the gas side of the mounting holes. This will prevent gas leaking through the bolt holes. Gasket size is normally 1/16" Thick X ½" Wide.

3.2.2 GASKET (High Temperature >600° F.

The high temperature joints are manufactured with a fiberglass cuff material and may not require additional gasketing. The liner to frame connection will require gasketing and a 1/8" X 3" bolt hole gasket is normally used and supplied with the joint. Spray adhesive is used to install the gasket to the mating flange. Spray both the flange and gasket and allow it to get tacky prior to positioning and pressing over the flange bolt holes.

3.2.3 FABRIC

Various fabric materials are used in the manufacturing of molded corner style expansion joints. The base material may be fiberglass-reinforced elastomer (VITON, Chlorobutyl, EPDM), fiberglass reinforced PTFE (Texfilm, LFP, PTFE) or insulated LFP with additional insulation heat bonded to the surface (Thermalam products). Elastomers and Thermalam products are self-sealing against the duct flanges. The reinforced LFP materials are relatively thin and should be installed with the PTFE gasket.

3.2.4 LINERS:

These expansion joints may be supplied with bolt-in or weld-in liners to provide erosion protection for the fabric. The bolt-in liner will mount to the upstream side of the duct flange and gasket described above may be used. Another gasket strip may be used on the fabric side of the bolt-in liner for the Option 1A joint. It also may be best to position the fabric over any one-piece liner prior to positioning the liner for factory spliced endless belts. The weld-in liner may be welded to the duct inside or the duct flange.
NOTE: Protect the fabric from weld burns with a fiberglass welding blanket or other suitable material.

3.2.5 EXPANDED METAL COVER

The expanded metal cover (if used) will install after the expansion joint has been installed. There are mounting tabs attached to the inlet frame with weld studs. The cover will mount over these studs and attached using the washers and nuts provided.

Do not use a cutting torch near the fabric.

4.0 MAINTENANCE

Flue Gas Solutions, Inc. fabric expansion joints require minimal maintenance attention. Fasteners should be checked after the first month of service to insure proper tightness (between 25 & 30 ft/lb. maximum). Annual spot-checking of the clamping fasteners for tightness is then required. Annual visual inspection for any surface damage is recommended. Also at this time, look for any unusual lateral joint movements indicated by excessive fabric stretching in one direction. Make sure the outer fabric surface is exposed to an ambient air environment and assure no debris collects on any fabric surface and is never insulated over.
Any questions concerning the joints installation please call Flue Gas Solutions, Inc. at (207) 893-1510

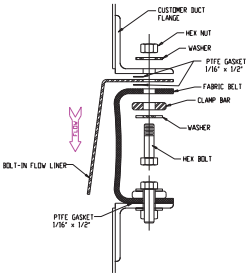

EXPANSION JOINT MAINTENANCE

REVISION LOG

Date	Rev	Pages Affected	Revision Description
21 Oct 2016	1	all	First issue to client

EXPANSION JOINT MAINTENANCE

EXPANSION JOINT MAINTENANCE

This is a generalised document for all Fabric Belt-Type Expansion Joints supplied by Baltec IES. In order to ensure a long working life following installation of the expansion joint, it is recommended to adhere to the following regular maintenance and inspection items:

ITEM	PROCESS	EXECUTION PERIOD
Fabric Belt	A visual inspection of the fabric belt should be undertaken to check for any signs of punctures, tears or burning. Any defects which are discovered should be advised to Baltec IES to assess further action.	12 Months or 100 GT starts (whichever comes first)
Belt Clamping Bars	The tension of the nuts holding the belt clamping bars should be checked against specifications. Any loose nuts should be re-tensioned to ensure gas-tight sealing between the belt and frame.	12 Months or 100 GT starts (whichever comes first)
External – Paintwork	Paint on the outside of the Expansion Joint flanges is to be visually checked for any signs of blistering, flaking or corrosion. Any identified areas are to be touched up using appropriate paint.	12 Months or 100 GT starts (whichever comes first)
Internal – Liner Plates	The general condition of the expansion joint 409 stainless steel liner plates should be checked during each GT shutdown.	Every GT shutdown

End of Document

WARNING:	This manual should be used in conjunction with national laws. It is a mandatory part of the Steam Vent Silencer (SVS) and, according to the present laws, should be available for consultancy throughout the lifespan of the Steam Vent Silencer. The manual should be kept nearby the SVS in a safe, dry and sheltered place. It should be available for consultancy at all times. In case the manual is damaged or lost a new copy can be obtained from Aarding Thermal Acoustics B.V.

Aarding Thermal Acoustics B.V. (ATA)
P.O. Box 65
8070 AB, Nunspeet (NL)
Tel: +31-341-252635
Fax: +31-341-262112
Website: Http://www.ata-bv.com

All rights reserved. No part of this publication may be reproduced, stored in a retrieval system or transmitted in any form or by any means, without the prior permission in writing from Aarding Thermal Acoustics B.V.

Aarding Thermal Acoustics B.V. cannot accept responsibility for errors or omissions.

CONTENTS

0. Preface
- 0.1 Purpose of the manual
- 0.2 Focus group
- 0.3 Lay out of the manual

1. Introduction
- 1.1 Description of the SVS
- 1.2 Purpose of use
- 1.3 Operating conditions
- 1.4 Operating personnel

2. Safety
- 2.1 Preface
- 2.2 Residual risk and hazards
- 2.3 Safety devices
- 2.4 Safety precautions

3. Installation and first start (commissioning)
- 3.1 Preface
- 3.2 Inspection before first use

4. Cleaning and maintenance
- 4.1 Preface
- 4.2 Maintenance / Inspection
- 4.3 Inspection

APPENDIX
- I GA Drawing (s) (P0XXXX-65-XXXX)
- II Installation instruction for SVS (P0XXXX-65-XXXX)
- III Storage procedure and offloading procedure

0. Preface

0.1 Purpose of the manual

This manual contains the necessary information for operation, maintenance, handling, transport, storage, erection, commissioning, repair and disassembly of the SVS.

All personnel responsible for operating and maintaining the SVS has to read and understand this installation, operating & maintenance manual (IOM). In order to prevent and reduce the risk of dangerous situations Aarding Thermal Acoustics B.V. cannot accept responsibility for dangerous situations as a result operating the SVS under conditions other than stated in Appendix I. Special attention should be given to recommendations in this manual.

0.2 Focus group

This manual is intended for personnel who will assemble, install and maintain the SVS. This manual indicates how the SVS should be used. Additionally the manual gives an indication of the maintenance intervals and it provides suggestions for proper maintenance of the material.

0.3 Lay out of the manual

This manual consists of separate chapters; each chapter has its own (separate) focus group. It goes without saying that all chapters in this manual are important, not only the chapters referring to certain tasks: persons working with the SVS in any way should be familiar with the contents of the complete manual.

In this manual the following pictograms are used:

Hint:	This symbol indicates special information on either the best possible use of the SVS or how to facilitate operation of the SVS.
Mind this:	This symbol indicates potential problems. Comply with the instructions in order to avoid these problems.
WARNING:	This symbol indicates potential dangers to either the SVS or people. Comply with the instructions in order to avoid damage or injury.

1 Introduction

1.1 Description of the SVS

Blow-off silencers

For the acoustics market ATA develops sound absorbers and blow-off silencers. These sound absorbers and silencers ensure that people can live and work peacefully in the vicinity of industrial installations. When steam and gases escape under high pressure a lot of noise is made. Noise levels from 100 to 150 dB(A) are therefore not unusual. The exact moment of blow-off cannot be predicted when safety devices are used, which means that shock reactions can occur. When gases or steam are being blown off (e.g. discharging of autoclaves) the present environmental regulations require the use of a silencer or muffler. This ensures that the noise emission standard is not exceeded. Use of an ATA blow-off silencer, type AAT, ensures that the noise production is kept to an acceptable level. During the blow-off a considerable amount of energy is released within a short time. This fact imposes stringent requirements on the construction of a blow-off silencer. ATA, working in close co-operation with ATDEC and TIG, has developed the so-called "AAT- silencer". Both the construction and the soundproofing meet the most stringent requirements. Thanks to the compact design the dimensions and the weight are both kept to a minimum. With this type of silencer acoustic insulation values as low as 60 dB(A) can be achieved.

The silencer type AAT is based on the principle of allowing gas or steam to escape through a large number of very small openings. Resulting in high-frequency sound. Often this sound lies wholly or partially above the limit of audibility - the so-called transformation principle. The remaining, undesirable sound is muffled by sound absorption.

1.2 Purpose of use

The SVS is designed for venting clean steam under conditions as stated in Appendix I. Using the SVS other than stated in this manual, can cause an unsafe working situation that is not safe for either the SVS, the steam system or the operator(s).

1.3 Operating conditions

Any application, other than specified in Appendix I or one going beyond the specified capacity is unauthorised. ATA is not liable for damages resulting from inappropriate conditions. The consequences are for the end-user.

1.4 Operating personnel

The SVS is designed using state-of-the-art technology and is in line with current safety regulations. However, the general risk of personal injury or damage to the SVS cannot be completely eliminated. Therefore the SVS may only be operated and assembled by competent and qualified personnel and only be used for the specified application. Therefore a careful study of this manual should be made before attempting to use or service the SVS, and particular attention should be paid to the safety instructions.

2 Safety

2.1 Preface

In this chapter the safety instructions in relation to the SVS will be explained. A careful study of this chapter should be made before attempting to operate or service the SVS.

Hint:	If safety instructions mentioned in this chapter are not clear, contact ATA for more information.

The most important risk and hazards in relation to use of the SVS are summarised in § 2.2. In § 2.3 the safety devices are described with which the SVS is completed. Next in § 2.4 the safety precautions which the operator of the SVS has to adhere to are explained.

2.2 Risk and hazards

The following risk and hazards in relation to the SVS can be indicated.

- Direct or indirect contact with steam flow while steam vent is in operation.
- Direct or indirect contact with hot surfaces.
- Direct or indirect contact with hot water from drain.
- Shock reaction due to noise when the SVS starts to vent.
- Moving parts due to thermal expansion.

In the design of the SVS we reduced these above mentioned risks as much as possible; the safety devices to ensure safe operation are mentioned in § 2.3. In addition to the above the operator should follow the safety precautions stated in § 2.4.

2.3 Safety features

In order to obtain a safe working condition of the SVS the following features are included in the design of the SVS:

- SVS are normally placed on top of the boiler and the steam coming out of the SVS will be guided upwards.
- The drain is equipped with a pipe in order to connect it to the draining system.
- Suitable clearances for thermal expansion are used to minimise the risk of injury.
- The SVS is equipped with an “earthing” connection.

2.4 Safety precautions

For using the SVS in a safe way it is necessary to adhere to a number of safety precautions; the precautions are summarised below.

GENERAL

- It is advisable to apply thermal insulation on the outside of the silencer housing for personnel protection.
- Local rules and plant rules, in operation for general safety, should be adhered to.
- If the boiler is in operation; **maintain a safe distance from the SVS of minimal 10 m (30 ft).**

WARNING:	Inspection, cleaning and maintenance should only be carried out during boiler maintenance periods. During these periods one is certain that the SVS will **NOT** go in to operation.

PERSONAL PROTECTION

- ATA recommends the use of safety shoes, protective gloves, ear protection, safety glasses and helmet while in close proximity to the SVS.

PREPARATIONS FOR SAFE OPERATION AND PRECUATIONS DURING INSPECTION CLEANING AND MAINTENANCE

- The SVS may only be operated or assembled by competent and qualified personnel and only be used for the specified application. Therefore a careful study of this manual should be made before attempting to install, operate or service the SVS.
- Before the SVS is put into operation verify that all safety precautions have been taken, checked and in operation.

3 Installation and first start (commissioning)

3.1 Preface

In this chapter information is given about the preparation for use of the SVS. In Appendix II the main steps for the installation are described. In § 3.2 the checkpoints are given for the inspection of the SVS prior to the commissioning of the SVS.

3.2 Inspection before first use

Check the SVS with respect to the following points:

- Check if the vent area above the silencer is free.
- Check if the piping is installed correctly. (Pipe and core element should correspond)
- Check if external insulation has been applied on piping and silencer housing. (If relevant)
- Check if operating conditions are as described in the Appendix I.

4 Cleaning and maintenance

4.1 Preface

The SVS is designed in such a manner that maintenance can be kept to a minimum.

4.2 Maintenance

WARNING:	The SVS may only be maintained and (dis-)assembled by competent and qualified personnel. Therefore a careful study of this manual should be made before attempting to service the Steam Vent Silencer, and particular attention should be paid to the safety instructions. Maintenance work is only allowed during boiler maintenance periods.

WARNING:	Make sure that there is no pressure build up in the SVS before starting with maintenance work. Check if the pressure in the SVS equals the ambient pressure.

4.3 Inspection

Daily

- Where practical possible before use; a visual inspection of the SVS for defects.

Once each month

Particular attention should be paid to the following points:

- Check for dirt build-up in the drainage pipe.
- Check the thermal expansion system of the inlet pipe.
- Check if fixation of the SVS still is correct.
- The presence of all the safety precautions.

Once each year

- Check if the acoustic absorption material is in place.
- Check if the SVS is working within the conditions described in the Appendix I.
- Corrosion check on silencer inlet pipe.
- Corrosion check on silencer casing.

Appendix III

Steam Vent Silencer(SVS)
Storage Procedure and Offloading Procedure

Storage Procedure:

Storage requirement for the SVS is C

Offloading Procedure

Offloading of the materials can be done by:

1. Lift Truck, the capacity depends on the weight of the silencer
2. Hoisting Crane and hoisting rope

Storage Requirements:

A = Storage Outdoor

B = Storage Under Shelter

C = Storage Indoor

D = Storage Indoor Temperature Controlled

1.0 TECHNICAL DESCRIPTION

1.1 RANGE OF SPRING UNITS

Our standard series of Variable Supports are produced in four basic travel ranges ie 35mm, 70mm, 140mm and 210mm and these are designated Fig V35, V70, V140 and V210 respectively. The travels stated represent the normal total work range of the springs, but as the supporting effect of a spring is a direct function of spring rate and travel, it is usual only to select variable supports so that the load variation does not exceed 25% of the load to be carried.

In keeping with generally accepted practise, we recommend that the actual load is correctly supported when the pipe has expanded or contracted into its working position. This ensures that no abnormal or excessive force due to out-of-balance supporting is transferred to the pipe system when in its stressed working condition. Whether this or any other principle is followed for the purpose of selecting variable supports, care must be taken to ascertain that sufficient travel is available in the spring assembly to permit free vertical movement of the pipe from either the cold to hot, or hot to cold position.

The variety of types and top fixings available are illustrated in the Carpenter & Paterson catalogue. All spring units are preset to the cold load at our works, according to the load and working travel each unit is to accommodate. The preset/hydrostatic stops should remain in position during installation of the pipeline, and also during any subsequent testing of the system (i.e hydrostatic test). These stops must be removed before the system is commissioned. (refer to Installations Instructions). Max Test Load = 2 x Working Load.

1.2 SELECTION

To select the correct spring unit:-

1.2.1 Establish the correct service load
1.2.2 Add ancillary weights – i.e. rods, clamps, etc. which may additionally require to be carried by the spring unit.
1.2.3 Travel to be accommodated - 'cold to hot'
1.2.4 Decide what variation in load between 'cold' to 'hot' situations can be accepted. This should be kept to less than 25%.
1.2.5 Select a spring from the sizes 0-22 which will enable the 'cold' and 'hot' loads to be carried within the desired limits of the spring range.

1.3 SURFACE FINISH

All units can be supplied with either:-

- standard paint finish
- hot dip galvanised
- spring coils - plastic coated or plain
- alternative multi coat paint systems

1.4 ORDERING

When ordering please specify:-

- load
- travel - direction of travel
- figure number
- type
- size
- thread form
- hydraulic test load, if applicable

2.0 INSTALLATION INSTRUCTIONS

2.1 INSTALLATION INSTRUCTIONS FOR VARIABLE SPRING UNITS SIZES 0-17

Variable spring units are preset to a cold load position before despatch from our works.

The preset / hydrostatic tee bar test stops are coloured "red" and must be removed before the system is commissioned.

2.1.1 **To Install Spring Units – Type A, B, C**
The spring unit is fitted between the pipe/duct/bracket to be supported and the steelwork above the unit

The hanger rod coming up from the pipe clamp/duct/bracket is connected to the turnbuckle which is fitted to all these types of spring unit. Rotation of the turnbuckle transfers the pipe load to the spring unit thus allowing withdrawal of the preset / hydrostatic stops.
Note: ensure all hydro testing has been completed (if required) prior to removal of stops.

The stops can be retained for future use if required.

No further adjustment is required unless it becomes obvious that incorrect loads are being applied to the supports in the system. In this event we suggest that contact is made with our Engineering Department who will be pleased to advise on remedial action.

2.1.2 **To Install Spring Units Type D and E**
Both of these units are mounted on top of the steelwork

2.1.3 **For Type D**
The hanger rod passes through the unit and is secured to the spring unit at the top of the load tube by two nuts. The hanger rod should be adequate length and threaded sufficiently to take into account any deviation in pipe or duct elevation since these units are not supplied with a turnbuckle. Rotation of the two nuts at the top of the load tube transfers the pipe load to the spring unit thus allowing removal of the preset / hydrostatic stops.
Note: Ensure all hydro testing has been completed (if required) prior to removal.

2.1.4 **For Type E**
The hanger rod passes through the spring units and should be provided with two nuts to prevent it passing through the spring pressure plate. To provide adjustment in length to the rod it may be necessary to provide a turnbuckle at a more convenient situation in the hanger assembly.
Installation is then similar to Type D units.

2.1.5 **To Install Spring Units Type F and H**
These units are base mounted and should be aligned directly below the point of the support, the height of the load flange is then adjusted to contact the lower surface of the support point by rotation of the adjustment nut on the load column.

Further rotation of this nut will transfer the load onto the spring unit and then the preset / hydrostatic stops can be withdrawn.
Note: Ensure all hydro testing has been completed (if required) prior to removal of stops.

2.16 **To install Spring Unit Type G**
This unit is fitted with turnbuckles so that the hanger rods which having been connected to the steelwork above can be inserted into the turnbuckles. The rotation of the turnbuckle can transfer the load to the spring unit.

When the load is being correctly supported the preset / hydrostatic stops can be withdrawn.
Note: Ensure all hydro testing has been completed (if required) prior to removal of stops.

2.2 INSTALLATION INSTRUCTIONS FOR VARIABLE SPRING UNITS SIZES 18-22 ONLY

Spring Units Fig V35, V70, V140 and V210 sizes 18-22 are preset to a cold load position before despatch from our Works using three preset bars.

The preset bars are fitted with a label drawing attention to the fact that these bars must be removed before the system is commissioned; nevertheless the preset bars should remain in position until such time as commissioning procedure requires their removal. When the pipeline is subject to hydraulic test the preset bars should remain in position thus preventing any deflection on the spring assembly due to the additional load of the pipework.

2.2.1 **To Install All Variable Spring Units except Type F**

The Variable Spring Unit is installed in the hanger assembly and depending on the type of unit ordered, ie top hung types A, B and C or mounted types D and E, the unit can be connected on the bottom end to the pipe clamp or bracket via the drop rod.

2.2.2 **For Types A, B, C and G**

A turnbuckle is provided with the spring unit and thus the rod from the bracket or pipe clamp is connected into the turnbuckle

2.2.3 **For Type D**

A turnbuckle is not provided unless specifically requested and thus the drop rod passes through the unit and connects to the bracket or pipe clamp.

2.2.4 **For Type F**

This unit does not have a turnbuckle unless specifically requested although one is sometimes required. The location of the turnbuckle (if required) depends on the hanger assembly design.

2.3 LOAD TRANSFER

To transfer load from the installed situation (after any hydro testing has been completed) onto the spring unit is achieved as follows:

2.3.1 **For Types A, B, C and G**

Rotating the turnbuckle until the dowel on the spring pressure plate centralises in the hole in the preset bars thus allowing them to be released. The preset bars can then be stored for future use by hanging them down on the bolts provided with the Spring Unit ensuring they will not impede the operation of the unit.

2.3.2 **For Type D and E**

Type D. The tightening of the adjusting nuts at the top end of the spring pressure tube transfers the load onto the unit and allows the preset bars to be released as described in the previous paragraph

Type E. When there is a turnbuckle incorporated treat as Types A, B, C and G. When there is no turnbuckle available install as Type D.

2.3.3 **To Install Spring Units Type F**

The units are base mounted and should be aligned directly below the point of support and the height of the load flange is adjusted to contact the lower surface of the support point by rotation of the adjustment nut on the load column. Further rotation of this nut will transfer the load onto the spring unit and when the dowels are once again centralised in the preset bars they can be released. The preset bars should be stored for future use as described for Types A, B, C and G.

3.0 OPERATING

3.1 Commissioning

Prior to commissioning for service the following checks must be carried out:-

3.1.1 All preset/hydrostatic stops are removed and stored

3.1.2 The unit travel indicator is set at the correct preset position

3.2 INSPECTION DURING OPERATIONAL LIFE OF THE VARIABLE SPRING UNITS

3.2.1 Prior to operation check that items 3.1.1 and 3.1.2 of the commissioning instructions have been carried out.

3.2.2 On achieving plant steady state operating condition check to ensure that the unit is now in its operating position. This will be indicated by the position of the travel indicators, minor variations are allowable. If the variations are excessive, then this should be brought to the attention of the piping designer since this may be due to either:

- loads/travels have been incorrectly specified
- other reasons which become apparent during the examination stage.

3.2.3 On achieving an early plant steady state cold condition carry out same check as in 3.2.2 above but with reference to the cold condition position on the travel scale.

3.2.4 The supports should be inspected at regular intervals during the life of the plant. The frequency of the inspection depends on environmental and operating conditions.

For example, a land based power station where the supports are indoors, an inspection once per year would be adequate. In an hostile environment for example an offshore platform a monthly inspection may be required.

The frequency of the inspection is very dependent on the service environment and should then be changed to suit the inspection findings.

3.2.5 Inspections should be so timed to ensure a mix of cold and operating condition is achieved.

3.2.6 Inspection should cover at least, but not be limited to, the following points:-

- that the unit is in its correct position for the operating condition of the plant
- that the unit is correctly functioning
- that the spring coil is still complete (the coil may be viewed through the slot in the unit casing)
- corrosion of the unit is at an acceptable level – recommendations should be made if any repair to finish etc is required

In extremely hostile environments, such as an offshore platform, particular attention should be made to inspection of the units. Excessive build-ups of corrosion can occur rendering the unit inoperable. Checks must be made to ensure the unit is functioning.

3.2.7 Comprehensive records of inspections should be made and reviewed on a regular basis.

3.2.8 If any doubt exists as to the functioning of a unit it should be returned to the manufacturer for testing.

4.0 MAINTENANCE DURING OPERATIONAL LIFE OF THE VARIABLE SPRING UNIT

4.1 On an inland site or indoors environment, little or no maintenance is required other than perhaps the occasional application of a suitable grease to site threaded components.

The units are finished in the appropriate surface coating – painting system or galvanised. This may need repairing from time to time by the on-site contractor.

4.2 In a more hostile environment additional maintenance will be required and this should cover at least, but not limited to the following:-

4.2.1 Repair to any coating showing signs of significant red rust corrosion. Repairs to be carried out to an accepted/approved procedure.

4.2.2 Application of an acceptable grade of engineering grease to all threaded components.

This should be carried out on a three monthly basis, but this can be modified by reference to the Inspection reports.

Details of the maintenance carried out should be recorded and reviewed with the inspection reports.

5.0 ADDITIONAL SERVICE

Please note that Carpenter & Paterson offer a full inspection service, including stress analysis of all pipework and pipe support systems.

Contact Information :

Welshpool Office : Tel : +44 (0) 1938 552061 Fax : +44 (0) 1938 555306

Email : info@cp-ltd.co.uk

Website : www.cp-ltd.co.uk

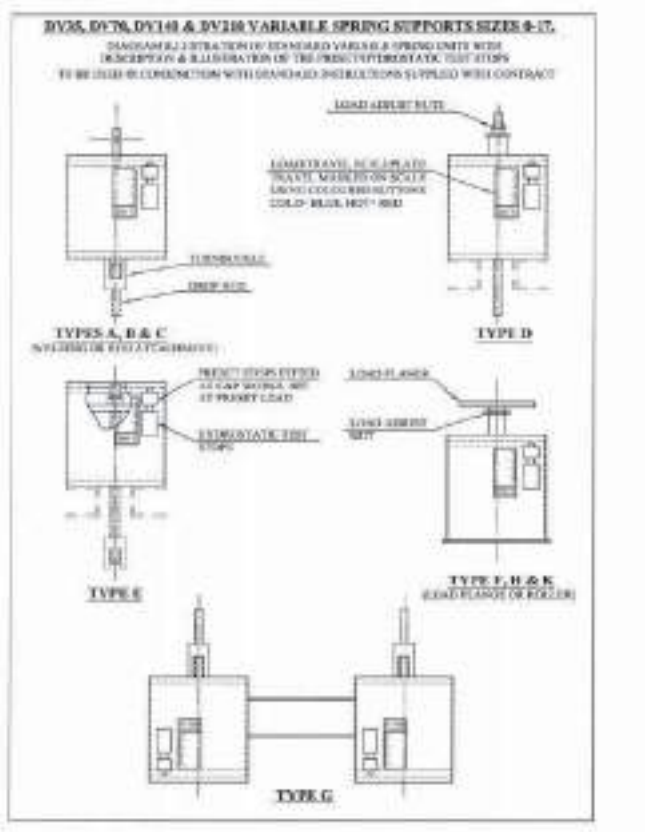

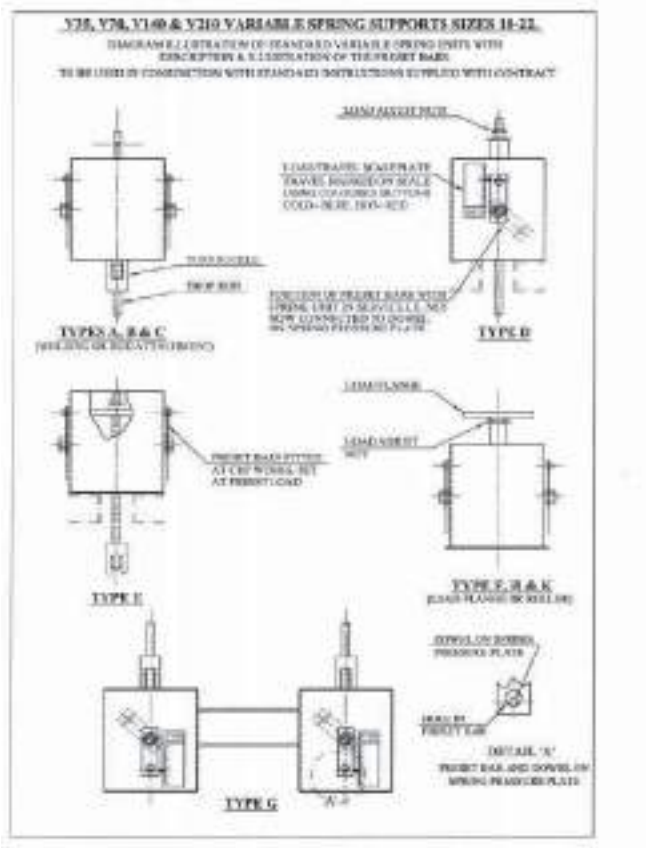

Carpenter And Paterson (Asia) Ltd.

88/91 Moo 15 T. Bangsaothong, A. Bangsaothong, Samutprakarn 10540 Thailand

E-mail : info@cp-ltd.co.th

☎ + 662-1825204 to 5 Fax: +662-1825206 Web : http://www.cp-ltd.co.uk/

Doc No: INST.CON

CONSTANT SPRING UNITS

TECHNICAL DESCRIPTION

incorporating

INSTALLATION and

OPERATING / MAINTENANCE

INSTRUCTIONS

Rev	Date	By	Appv By	Pages Rev
0	10.01.00	NAS	BD	-
1	12.03.01	NAS	BD	-

WITCH Pipe Suspension Equipment

1.0 TECHNICAL DESCRIPTION

1.1 DESIGN DETAILS

The Constant Spring Support designed and manufactured by Carpenter & Paterson Ltd incorporates the latest design concepts, resulting in a constant support effort through the total travel of the unit. The simplified construction, together with the established principles of a compression spring, working in conjunction with a bell crank lever, achieves a mathematically perfect counter balancing of spring and load moments about the main pivot point.

With a fixed spring housing of substantial construction the unit can be installed in many arrangements. The spring housing prevents the ingress of foreign bodies such as construction debris, thus reducing the danger of damage or restriction of the unit's function.

The standard range of constant supports are constructed to accommodate loads between 12kg and 45700kg with a standard range of travels from 40mm to 610mm in 10mm increments.

Constant supports are manufactured having a maximum deviation of ±5% of the specified load.

Upper and lower travel stops are incorporated in all units to prevent excessive overtravel.

All supports are fitted with a travel scale.

Special constant spring supports can be designed to suit customer's specific requirements ie higher loads, travels and configurations other than those indicated in the standard range.

The standard range as illustrated on sheet 9 have various types of attachment which can be adapted to suit the contract requirements.

Note: The variable position locking mechanism and load adjust facility is illustrated on sheet 10 fig 1.

1.2 PRESETTING

All constant supports are fitted with preset pins. These pins are factory positioned within the unit to suit the customers specified installed condition. On completion of installation and prior to removal of pins, the pipework system can be hydraulically tested or acid cleaned without further deflection of the spring assembly. The preset pins must be removed before commissioning the system (refer to installation instructions).

Our standard presetting pins will enable loads up to twice the capacity of the support to be taken during the hydraulic testing period.

Should it be necessary to carry loads in excess of this, we must be notified at the time of ordering to ensure the supports are designed with adequate safety margins.

Variable position locking mechanisms can be fitted if specified on customer purchase order.

1.3 LOAD ADJUSTMENT

Although the supports are preset to the customer's specified load and travel, it is sometimes necessary to adjust this preset load to accommodate minor variations in actual site conditions. A simple operation of turning the load adjuster screw in the appropriate direction to increase or decrease the load is all that is necessary. The amount of adjustment being ±20% of the mean load.

1.4 SURFACE FINISH

Surface finish as requested by the customer e.g. Painted , Galvanised etc..

1.5 MAJOR FEATURES

The major features of the C&P Constant Spring Unit are shown on Fig.1

This is shown as a C50 type O but is typical for all of the C&P range of Constant Spring Units.

2.0 INSTALLATION INSTRUCTIONS

2.1 INSTALLATION PROCEDURE

The installation instructions are similar for all types of Constant Spring Units.

For example assume the unit illustrated in fig 1 is a C50 type O fitted with a variable position locking mechanism, the following procedure should be adopted when installing the unit. It should be noted that the standard unit is not fitted with a variable position locking mechanism. The installation instructions however are the same.

Attachment of the Constant Spring Units to the new or existing steelwork

The Constant Spring Unit is attached by either welding or bolting in accordance with the support detail drawings.

2.2 CONNECTING AND LOADING OF CONSTANT SPRING UNITS

2.2.1 Sling Rod Connection C50, C51, C52, & C53

The sling rod connecting the Constant Spring Unit to the pipe clamp should be adjusted so that it becomes tight. By rotating the turnbuckle, load will be transferred from the temporary support into the Constant Spring Unit. At this stage the locking pin will still be fitted to the unit. If a variable position locking mechanism (VPLM) is fitted the nuts at the rear of the spring casing should be wound back to the end of the spring tension bars which pass through the channel section, and to the nuts at the back of the pressure plate. Both sets of nuts to be locked back.

2.2.2 Base Mounted C54 & C55

The load column is adjusted so that it becomes tight under the pipe support shoe. By rotating the load adjuster nut the load will be transferred from temporary support onto the Constant Spring Unit. At this stage the locking pin will still be fitted in place. Any VPLM (if fitted) should be wound to the full extent of the allowable travel and locked in that position.

2.3 PRE-COMMISSIONING

The locking pins should normally remain in position for any pre-commissioning overload conditions but **must** be removed prior to the pipeline being put into service. The pin should be stored in the storage washer provided on the unit for future use.

The variable position locking mechanism, when fitted, is provided so that the lever arm can be fixed in any position. The mechanism should not be used unless instructed to do so by the customer. The VPLM is engaged by winding the nuts both sides of the channel section thereby trapping the spring tension rods in the channel. The unit is now locked in that position.

The standard units will need to be returned to its original preset position for refitting of the locking pin.

2.4 TO WITHDRAW THE LOCKING PIN

Check with Pipework Erection Programme regarding timing for removal of pin. (This is a client decision).

The locking pin passes through the Constant Spring Units sideplates and through the bell crank lever arm, for ease of checking the hole in the unit sideplates is larger than in the lever arm. When the locking pin is centralized in the hole in the unit sideplate the design load of the unit is being carried and the locking pin can be withdrawn.

If difficulty is found with the removal of the pre set locking pin then contact should be made initially with the Engineering Office of the Designer of the pipework system. The fact that the pin cannot be removed indicates either over or under loading. This will be indicated by the position of the pin in the hole. If the pin is trapped against the side nearest the spring coils, then the support is exerting more load than being generated by the pipe weight. If the pin is trapped against the side furthest from the spring coil then the pipe is exerting more load than the spring effort generated by the spring coil.

Load adjustment can be made using the load adjusting mechanism - Any changes must be authorised by the piping designer.

2.5 ADJUSTMENT OF UNIT TO MODIFY THE LOAD

The unit has a facility which can enable the original calibrated design load to be adjusted ±20%. The units have a scaleplate fixed to them denoting this load adjust facility. By turning the load adjuster nut in the appropriate direction the load can be increased or decreased as required. The load adjuster scaleplate is calibrated in 2% divisions.

3.0 OPERATING

3.1 COMMISSIONING

Prior to commissioning for service the following checks must be carried out:-

3.1.1 All preset pins are removed and stored

3.1.2 The unit travel indicator is set at the correct preset position

3.1.3 If fitted the VPLM locking nuts are wound back away from the channel section in both directions.

3.2 INSPECTION DURING OPERATIONAL LIFE OF THE CONSTANT SPRING UNITS

3.2.1 Prior to operation check that items 3.1.1 to 3.1.3 of the commissioning instructions have been carried out.

3.2.2 On achieving plant steady state operating condition check to ensure that the unit is now in its operating position. This will be indicated by the position of the travel indicator, minor variations are allowable. If the lever arm is against either the lower or upper travel stop then remedial action should be taken by the piping designers since either

3.2.1 loads/travels have been incorrectly specified

3.2.2 other reasons which become apparent during the examination stage.

3.2.3 On achieving an early plant steady state cold condition carry out same check as in 3.2.2 above but with reference to the cold condition position on the travel scale.

3.2.4 The supports should be inspected at regular intervals during the life of the plant. The frequency of the inspection depends on environmental and operating conditions.

For example, a land based power station where the supports are indoors, an inspection once per year would be adequate. In an hostile environment for example an offshore platform a monthly inspection may be required.

The frequency of the inspection is dependent on the service environment and should then be changed to suit the inspection findings.

3.2.5 Inspections should be so timed to ensure a mix of cold and operating condition is achieved.

3.2.6 Inspection should cover at least but not limited to the following points:-

- that the unit is in its correct position for the operating condition of the plant
- that the unit is correctly functioning
- that the spring coil is still complete (the coil may be viewed through the slot in the unit casing)

- corrosion of the unit especially the load adjuster assembly and spacer washers is at an acceptable level – recommendations should be made if any repair to finish etc is required

In extremely hostile environments, such as an offshore platform, particular attention should be made to inspection of the units. Excessive build-ups of corrosion can occur rendering the unit inoperable. Checks must be made to ensure the unit is functioning.

3.2.7 Comprehensive records of inspections should be made and reviewed on a regular basis.

3.2.8 If any doubt exists as to the functioning of a unit it should be returned to the manufacturer for testing.

4.0 MAINTENANCE DURING OPERATIONAL LIFE OF THE CONSTANT SPRING UNIT

4.1 The units are fitted with maintenance free bearings. This however does depend on the environment in which the unit is situated.

4.2 In a land based power station for example little or no maintenance is required other than perhaps the occasional spray over the area of the load adjuster spacer washers/bearings with a medium grade lubricating oil.
This requirement should be apparent from the inspection reports.

The units are finished in the appropriate surface coating – painting system or galvanised. This may need repairing from time to time by the on site painting contractor.

4.3 In a more hostile environment more maintenance will be required and this should cover at least, but not limited to the following:-

4.3.1 Repair to any coating showing signs of significant red rust corrosion.
Repairs to be carried out to an accepted/approved procedure.

4.3.2 Saturation by the use of penetrating oil between all moving parts, with particular attention being paid to the spacer washers between the load adjuster block and the lever side arms.

This treatment should be followed by the application of a good grade of engineering grease over the area treated.

This should be carried out on a three monthly basis, but this can be modified by reference to the Inspection reports.

Details of the maintenance carried out should be recorded and reviewed with the inspection reports.

5.0 ADDITIONAL SERVICE

Please note that Carpenter & Paterson offer a full inspection service, including stress analysis of all pipework and pipe support systems. .

Contact Information :
Welshpool Office : Tel +44 (0) 1938 552061 Fax : +44 (0) 1938 555306
Email : info@cp-ltd.co.uk
Website : www.cp-ltd.co.uk

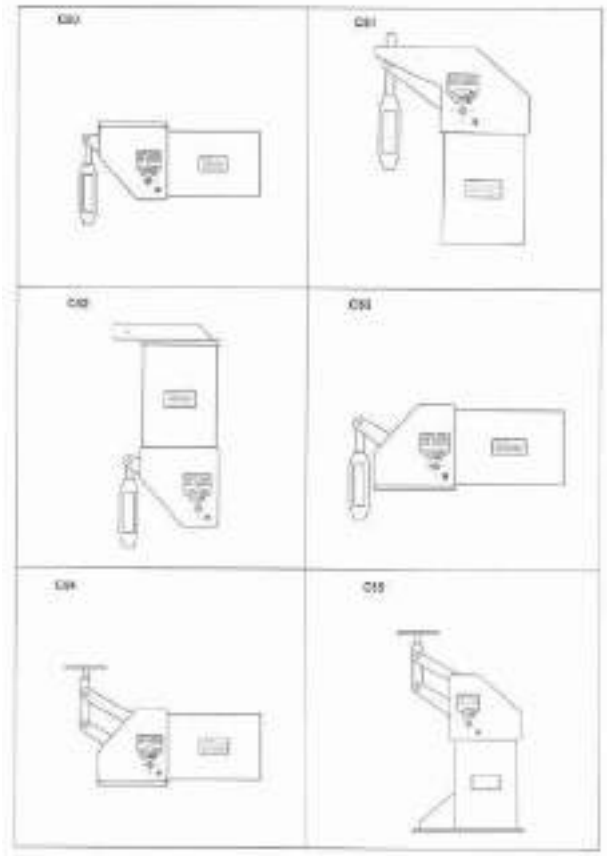

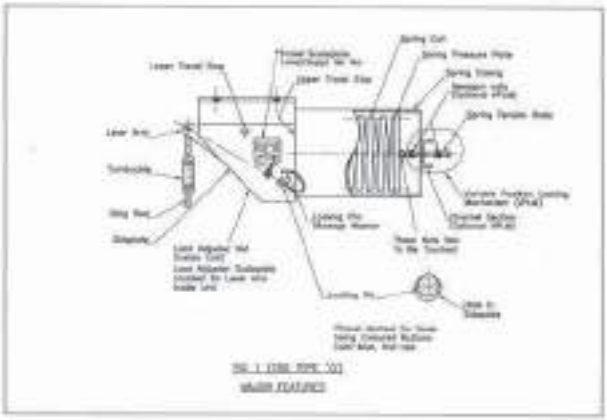

10/10

Fluidic Techniques and Vickery-Simms

Divisions of FTI Industries, Inc.

Table of Contents

Legal Information 3

Section 1: Introduction 4

Section 2: Design & Materials 5

Section 3: Handling 7

Section 4: Shipping Preparation & Storage 8

Section 5: Installation 9

Section 6: Operation & Maintenance 11

Appendix A: Nameplates for Differential Pressure Type Flow Meters 12

Appendix B: CE Tags 13

Appendix C: Flow Measurement References 14

Legal Information

Warnings

This document contains notices such as Warnings and Cautions that have to be observed to ensure personal safety and to prevent damage to the equipment and other property.

Qualified Personnel

Only personnel qualified for the specific task should handle, install or operate the products described in this manual.

Proper use of products

These products should only be used for the applications as described in the Technical Design Documentation for the particular item. The product should be properly transported, stored, assembled, installed, operated and maintained to ensure that the products operate safely and without problems. The information in the Technical Design Documentation must be observed.

Liability Disclaimer

To ensure consistency with the product provided, the contents of this document have been reviewed; however, full consistency cannot be guaranteed. Any necessary corrections determined by regular review and returned comments will be included in subsequent editions.

Notes

- All details and variation in equipment or every possible contingency to be encountered during installation, operation or maintenance cannot be covered in this document. If additional information is needed, or a particular problem arises, please contact FTI. Contact information is provided below.

  Phone: 817-473-4481; Fax: 817-473-6318

  Email: ftidc@fti-industries.com

  Website: www.fluidictechniques.com ...or scan the code →

- The contents of this document shall not become part of or modify any prior or existing agreement, commitment or relationship. The entire obligation of FTI is contained in the sales contract. The warranty stated in the contract between parties is the sole warranty of FTI. Except where noted in this document that an operation or procedure will result in the voiding the original warranty, any statements contained in this document do not create any new warranties or modify the existing warranty.

Section 1 INTRODUCTION

Fluidic Techniques and Vickery-Simms are divisions of FTI Industries (FTI) Incorporated and their products bear the markings of "FT" or "V-S", respectively.

These products include differential pressure type Flow Meters and Flow Spools.

Differential Pressure Type Flow Meters include various types of orifice meters, venturi meters, flow nozzles, PTC 6 Flow Nozzle Test Sections, High Head Recovery (HHR) Flow Tubes and HHR FlowPaks.

- Except for the HHR Flow Tubes and HHR FlowPaks, these meters are designed and manufactured in accordance with the specified flow measurement code or reference.
- HHR Flow Tubes and HHR FlowPaks are of a proprietary design; thus, they are designed and manufactured exclusively by FTI.

In order to perform as expected, Flow Meters must be installed properly. Proper installation includes following the guidelines of the referenced flow measurement standard including the requirements of straight pipe upstream of the flow meter and orientation of the differential pressure taps. For most differential pressure flow meters, the meter must be installed so that the direction of flow is correct. The direction of flow is indicated on the drawing and on the meter. (See Appendix A)

Flow Spools are assemblies which are designed and manufactured in accordance with the specification provided to FTI. These assemblies may be used in conjunction with other types of flow meters or may be provided as a piping section so that flow straightening devices, expanding or reducing sections may be provided.

Flow Meters and Flow Spools will be referred to in this document as "Products". Products may consist of pipe, flanges, pipe fittings, convergent and divergent sections and meter bodies. Each part description and material are listed on the drawing which should accompany these instructions.

Caution

The information provided in this document is intended to provide general information about the handling, installation and use of the products. Design and flow measurement codes, standards and references are cited in this document. These publications should be consulted to ensure that the product is properly designed and installed. This document is not intended to replace any code or site safety document. Good engineering practices should always be utilized.

Products are designed and manufactured to be installed into conduits which transport fluids. Fluids may be liquid, gas or steam. The conduits may be parts of larger assemblies or subassemblies which are components of power generating stations, chemical plants, refineries, pipeline transport systems or other type of installation where the flow of fluid must be measured.

Design Codes

Listed below are some of the codes or standards typically used for product design. Other codes or standards may be used. The code or standard utilized for a particular item is listed on the drawing for that item.

- ASME B31.1 Power piping
- ASME B31.3 Process Piping
- ASME B31.4 Pipeline Transportation Systems for Liquid Hydrocarbons and Other Liquids
- ASME B31.8 Gas Transmission and Distribution Piping Systems

Products may also be provided in accordance with the Pressure Equipment Directive, PED 97/23/EC.

Danger:

1. ***The product design conditions are listed on the drawing. These conditions which include the Maximum Pressure, Maximum Temperature and Minimum Temperature should be observed or product failure may occur which may damage property, or cause injury or death to personnel.***
2. ***No protection is provided against over-pressurization of the products.***

Warnings:

Materials are specified by the user; therefore, it is the responsibility of the user to determine or specify the compatibility of the materials with the process fluid.

Design Conditions

The Design Conditions are shown on the drawing as Design Pressure, Design Temperature and MDMT, which is the minimum design metal temperature. These design conditions have either been provided to FTI in a specification or determined by FTI according to operating conditions which were provided. If the design conditions are determined by FTI according to the operating conditions, then a note on the drawing will advise that these conditions have been assumed.

The design conditions are utilized to determine or verify flange ratings, wall thicknesses and hydrostatic test pressures. These conditions may also be utilized to verify the service Category in accordance with Pressure Equipment Directive, PED 97/23/EC. If the product is supplied with CE marking, a nameplate bearing the design conditions will be permanently attached. An example of the nameplate is shown in Appendix B.

The materials listed on the drawing have either been provided to FTI as part of a specification or determined by FTI according to the materials specified and the design conditions. For example, a specification for a venturi meter states that the material of construction is carbon steel with a 316 stainless steel throat section. Depending on the design conditions and Nominal Pipe Size (NPS) of the installation, the inlet cylinder of the venturi may be A/SA 106 Gr.B CS, A/SA 106 Gr.C CS or SA 516 Gr.70 CS.

Danger

It is imperative to verify that the design conditions and materials listed on the drawing are correct. If the product is installed in an application where the design conditions may be outside of the range of the conditions shown, catastrophic failure may occur resulting in personnel injury or death and damage to the product and surrounding equipment.

Warning

Design calculations are based on internal pressure only and do not consider any external loads and mechanical or thermal cycling. The user is responsible for determining externally applied loads due to earthquakes, pipe movements and other environmental conditions, as well as fatigue.

Warning

User is responsible for verifying that the materials used are chemically compatible for fluid service.

Warnings

1) Never insert an object into any internal part of the product for lifting or handling. Inserting a chain, strap, or fork to lift product can damage internal surfaces which are critical to the proper operation of the product and voids the warranty.

2) Proper lifting techniques should always be used during handling and installation of the product. Failure to properly lift or support the meter can result in personnel injury and damage to the product which voids the warranty.

3) Inserting foreign objects into the branch connections may damage the product and void the warranty. For differential pressure type flow meters, the edge of the pressure tap hole where the hole goes through the pipe, flange or body is critical to the proper performance of the meter.

4) In accordance with certain code requirements, stress relief is required for some products. The stress relief may be required to relieve the stresses induced by welding (Post Weld Heat Treatment, PWHT). Exercise care to perform proper preheat and PWHT when welding fixtures for lifting or handling.

Flanges

The outer or user ends of the products may have flanges for bolting into the system.

Caution: Improper handling may damage the flange faces which could prevent the flanges from sealing when placed into service.

Weld Ends

The outer ends or user ends may be provided with weld preparations so that the product may be welded into the system.

Caution: Improper handling may damage the welding preparations which could cause problems in the fit up and welding when installing the product into the system.

Branch connections

These may be supplied as fittings such as weld-o-lets, sock-o-lets or thread-o-lets. These branch connections may be supplied with short pieces of pipe (nipples) installed.

Caution - The product should be handled so that the branch connections and nipples or valves, if installed, are not damaged.

Caution –Do not lift or handle the product by the branch connections or nipples or valves.

1) The drawing contains information about the steps taken at FTI to preserve the product. Unless otherwise required by the specification, exterior surfaces except for stainless steel parts will be coated with primer. The interior will be coated with a corrosion inhibitor.

2) Protective covers will be provided for flange faces.

3) The ends of products which are prepared for welding into the system will be coated with a weldable coating such as Deoxaluminite. After coating, these ends will be covered by plastic caps.

4) Plastic plugs will be installed in open branch connections.

5) These preparations are not intended for sustained exterior climates. Care should be taken to minimize exposure to exterior climates. The interior of the products should be protected against the moisture and foreign objects.

6) All meters must be stored indoors, and out of the weather, between shipping receipt and installation.

The product must be installed properly to perform as expected.

For differential pressure flow meters, the flow measurement standard is indicated on the drawing. Requirements for the length of straight pipe upstream of the meter, limitations of changes in diameter and orientation of the differential pressure taps are included in these standards. These requirements must be fulfilled to meet the published uncertainties of the meters.

HHR Flow Tubes and HHR FlowPaks are proprietary items; therefore, are not listed in flow measurement standards.

1. The published installation requirements for venturi meters should be followed for HHR Flow Tubes.
2. No additional straight pipe lengths are required upstream of the HHR FlowPak.

The **Direction of Flow** may be critical to proper operation of the product. Before installing, verify the direction of flow on the product and the drawing. (See Appendix A)

A list of flow measurement standards is shown in Appendix B.

Warning

To avoid damage to internal surfaces and obstruction of the differential pressure connections, the product should be installed in systems which are free of debris and foreign objects after all flushing or steam blows.

Warning

User is responsible for ensuring that all branch connections, including but not limited to those used for pressure, temperature and differential pressure connections, and inspection ports, are properly sealed. These connections may be threaded, socket weld or butt weld.

For Products with flanged connections

Warnings:

1. The flange classification has been verified in accordance with the design conditions and materials specified to FTI as shown on the drawing. It is the user's responsibility to verify that this information is correct before placing the flanges into service.
2. It is the responsibility of the user to ensure that the bolting and gaskets are the correct size and material for the service.
3. It is the responsibility of the user to ensure that the correct torque has been used before placing the flanges into service and after any thermal cycling.

For Products with Welded connections

Warnings:

1. Welding should be performed only by qualified welders using qualified welding procedures
2. The user is responsible for any stress relieving required due to welding performed outside of the FTI Facility, in other words, field welding.
3. The user is responsible for all nondestructive examination which is required due to field welding.

Any instrumentation should be properly installed in accordance with the manufacturer's instruction and any applicable code including flow measurement codes.

Caution – Before placing the product into service, verify the following:

1) Ports have been properly sealed

2) For flanged products, the bolts have been properly tightened to the correct torque

3) For products welded into the system, the welds have been completed and tested

Requirements for flow meter operation are described in explicit detail in the flow measurement codes, standards and references. These publications should be consulted to ensure proper operation of the product. The minimum requirements are that the products be installed in circular conduits of the same diameter. The conduits should be flowing full. For liquid service, the line should be vented to remove any gases entrapped gases. Similarly, liquids should be drained from lines for gas service before placing the line in operation.

Requirements for the operation of flow spools depend on the intended purpose of the spool. If the purpose is another type of flow meter such as an ultrasonic flow meter, then the instructions for the particular meter should be consulted.

Since the products are mechanical devices with no moving parts, no standard maintenance is required. Performance of flow meters should be observed and recorded to determine trends which may indicate that the product is not functioning properly. This may be the result of wear due to erosion, corrosion or damage due to foreign objects. If the installation permits, the internal surfaces of the products may be periodically inspected for wear such as erosion or corrosion or any damage to the surfaces. If feasible, orifice plates may be periodically removed and inspected. The inspection frequency will depend on the service.

As with other piping products in the system, the product should be routinely inspected by nondestructive examination.

Warnings:

1) Surface temperature of the product may be hot or cold which can cause personal injury.

2) Contents of the product may be pressurized during operation or testing. The product should be depressurized before any activity or operation which may result in pressure release. Inadvertent pressure release may cause injury to personnel and property.

3) During operation, the product should be filled with fluid(s). Caution should be used if the fluid(s) is(are) unstable and decomposition is possible.

For Differential Pressure Type Flow Meters

Example of Nameplate

Examples of CE Tags

For Category 1

For Categories 2 – 3, the Notifified Body ID number is added

AGA Report No. 3, Orifice Metering of Natural Gas • Part 1: General Equations & Uncertainty Guidelines • Part 2: Specification and Installation Requirements • Part 3: Natural Gas Applications
AGA Report No. 9, Measurement of Gas by Multipath Ultrasonic Meters
ASME Fluid Meters, Their Theory and Application
ASME MFC-3M: Measurement of Fluid Flow in Pipes Using Orifice, Nozzle and Venturi
ASME MFC-14M: Measurement of Fluid Flow Using Small Bore Precision Orifice Meters
ASME PTC 4.4: Gas Turbine Heat Recovery Steam Generators
ASME PTC 6: Steam Turbines
ASME PTC 19.5: Flow Measurement
ISO 5167: Measurement of fluid flow by means of pressure differential devices inserted in circular cross-section conduits running full • Part 1: General principles and requirements • Part 2: Orifice plates • Part 3: Nozzles and Venturi nozzles • Part 4: Venturi tubes

6

A DIVISION OF FTI INDUSTRIES

1213 ANTLERS DRIVE (P.O. BOX 449) MANSFIELD, TX 76063
PHONE 817/473-4481 FAX 817/473-6318

STORAGE PROCEDURE

ORIFICE PLATES

1.0 SCOPE

1.1 This procedure defines the recommendations for storage of ORIFICE PLATES.

2.0 RESPONSIBILITY

2.1 The Production Manager has the responsibility to ensure that the ORIFICE PLATE has been properly cleaned, sealed in plastic bags and properly packaged to withstand normal handling during transit.

3.0 PROCEDURE – IN FIELD

3.1 All ORIFICE PLATES should remain in sealed bags and left in package on flat shelf in storeroom or warehouse until ready for use.

3.2 Extra care should be taken not to nick, scratch or grind the sharp edge of the bore.

3.3 Care should be exercised to keep ORIFICE PLATES flat and free of scratches, oils, dust, lint, liquids and finger prints.

3.4 ORIFICE PLATES should never be left unprotected and out of doors.

3.5 ORIFICE PLATES may be hung on holders by use of the hole in the handle tab BUT NEVER BY THE BORE. They should be kept in a clean area and must be rinsed or wiped clean prior to assembly in line.

TWR Lighting,® Inc. HARK
Enlightened Technology®

10810 W. LITTLE YORK RD. STE. 130 - HOUSTON TX 77041-4651
VOICE (713) 973-6905 - FAX (713) 973-9352
web: www.twrlighting.com

IMPORTANT!!!

PLEASE TAKE THE TIME TO FILL OUT THIS FORM COMPLETELY. FILE IT IN A SAFE PLACE. IN THE EVENT YOU EXPERIENCE PROBLEMS WITH OR HAVE QUESTIONS CONCERNING YOUR CONTROLLER, THE FOLLOWING INFORMATION IS NECESSARY TO OBTAIN PROPER SERVICE AND PARTS.

MODEL # AA6M3XFRSSIND V17491

SERIAL # _____

PURCHASE DATE _____

PURCHASED FROM _____

VOGT POWER INTERNATIONAL
For Construction / Fabrication

VOGT POWER INTERNATIONAL
V17491-ICXE-525-01
16-May-2018

TABLE OF CONTENTS

1.0 GENERAL INFORMATION 1

2.0 INSTALLATION INSTRUCTIONS 2
2.1 MOUNTING THE CONTROLLER CABINET 2

3.0 EXTERNAL PHOTOCELL WIRING 3

4.0 POWER WIRING 3

5.0 SIDELIGHT WIRING 3

6.0 SIDELIGHT ALARM WIRING 4

7.0 THEORY OF OPERATION 5
7.1 POWER SUPPLY 5
7.2 SIDELIGHTS 5

8.0 MAINTENANCE GUIDE 6
8.1 RED OBSTRUCTION LIGHTING 6
8.2 L-810 LAMP REPLACEMENT 6
8.3 CONTROLLER 6
8.4 PHOTOCELL 6

9.0 MAJOR COMPONENTS PARTS LIST 7

10.0 SUGGESTED SPARE PARTS LIST 8

WARRANTY & RETURN POLICY

RETURN MERCHANDISE AUTHORIZATION (RMA) FORMS

APPENDIX

CHASSIS LAYOUT 1273-R V17491

CHASSIS SCHEMATIC 1273-S V17491

AA0 LIGHTING KIT T1463 V17491

L-810 OL-1 SINGLE OBSTRUCTION LIGHT DETAIL ..... 279-OL (REV C)

L-810 OL-1 WIRING DETAIL ..... 274-S (REV A)

JUNCTION BOX ..... 100089 (REV A)

WRAPLOCK FASTENING DETAIL 100984

WARRANTY & RETURN POLICY

RETURN MERCHANDISE AUTHORIZATION (RMA) FORMS

1.0 GENERAL INFORMATION

[illegible]

POWER FAILURE [illegible]

OBSTRUCTION LIGHTS [illegible]

2.0 INSTALLATION INSTRUCTIONS

2.1 MOUNTING THE CONTROLLER CABINET

[illegible]

3.0 EXTERNAL PHOTOCELL WIRING

[illegible]

4.0 POWER WIRING

[illegible]

5.0 SIDELIGHT WIRING

[illegible]

TWR Lighting, Inc. HARK
Enlightened Technology®
AA0M3XFRSSIND CONTROLLER

[illegible]

6.0 SIDELIGHT ALARM WIRING

[illegible]

4

M.2017.A.AA0M3XFRSSIND V17491
NEW 6-7-17

TWR Lighting, Inc. HARK
Enlightened Technology®
AA0M3XFRSSIND CONTROLLER

7.0 THEORY OF OPERATION

7.1 POWER SUPPLY

[illegible]

7.2 SIDELIGHTS

[illegible]

M.2017.A.AA0M3XFRSSIND V17491
NEW 6-7-17

TWR Lighting, Inc. HARK
Enlightened Technology®
AA0M3XFRSSIND CONTROLLER

8.0 MAINTAINANCE GUIDE

8.1 RED OBSTRUCTION LIGHTING

[illegible]

TOOLS REQUIRED: NONE

8.2 L-810 LAMP REPLACEMENT

[illegible]

8.3 CONTROLLER

[illegible]

8.4 PHOTOCELL

[illegible]

M.2017.A.AA0M3XFRSSIND V17491
NEW 6-7-17

9.0 MAJOR COMPONENTS PARTS LIST

QTY	PART NUMBER	DESCRIPTION
[illegible]	[illegible]	[illegible]
[illegible]	[illegible]	[illegible]
[illegible]	[illegible]	[illegible]
[illegible]	[illegible]	[illegible]
[illegible]	[illegible]	[illegible]
[illegible]	[illegible]	[illegible]
[illegible]	[illegible]	[illegible]
[illegible]	[illegible]	[illegible]
[illegible]	[illegible]	[illegible]
[illegible]	[illegible]	[illegible]
[illegible]	[illegible]	[illegible]
[illegible]	[illegible]	[illegible]
[illegible]	[illegible]	[illegible]

10.0 SUGGESTED SPARE PARTS LIST

QTY	PART NUMBER	DESCRIPTION
[illegible]	[illegible]	[illegible]
[illegible]	[illegible]	[illegible]
[illegible]	[illegible]	[illegible]
[illegible]	[illegible]	[illegible]
[illegible]	[illegible]	[illegible]

Warranty & Return Policy

TWR Lighting®, Inc. ("TWR®") warrants its products (other than "LED Product") against defects in design, material (excluding incandescent bulbs) and workmanship for a period ending on the earlier of two (2) years from the date of shipment or one (1) year from the date of installation.

TWR Lighting®, Inc. ("TWR®") warrants its "LED Product" against defects in design, material and workmanship for a period of five (5) years from the date of shipment. TWR®, at its sole option, will, itself, or through others, repair, replace or refund the purchase price paid for "LED Product" that TWR® verifies as being inoperable due to original design, material, or workmanship. All warranty replacement "LED Product" is warranted only for the remainder of the original warranty of the "LED Product" replaced. Replacement "LED Product" will be equivalent in function, but not necessarily identical, to the replaced "LED Product."

TWR Lighting®, Inc. ("TWR®") warrants its "LED Product" against light degradation for a period of five (5) years from the date of installation. TWR®, at its sole option, will, itself, or through others, repair, replace, or refund the purchase price paid for "LED Product" that TWR® verifies as failing to meet 75% of the minimum intensity requirements as defined in the FAA Advisory Circular 150/5345-43G dated 09/26/12. All warranty replacement "LED Product" is warranted only for the remainder of the original warranty of the "LED Product" replaced. Replacement "LED Product" will be equivalent in function, but not necessarily identical, to the replaced "LED Product."

Replacement parts (other than "LED Product") are warranted for 90 days from the date of shipment.

Conditions not covered by this Warranty, or which might **void** this Warranty are as follows:

- Improper Installation or Operation
- Misuse
- Abuse
- Unauthorized or Improper Repair or Alteration
- Accident or Negligence in Use, Storage, Transportation, or Handling
- Any Acts of God or Nature
- **Non-OEM Parts**
  The use of Non-OEM parts or modifications to original equipment design will void the manufacturer warranty and could invalidate the assurance of complying with FAA requirements as published in Advisory Circular 150/5345-43.

Warranty & Return Policy
(continued)

Field Service – Labor, Travel, and Tower Climb are not covered under warranty. Customer shall be obligated to pay for all incurred charges. An extensive network of certified and insured Service Representatives is available if requested.

Repair, Replacement or Product Return RMA Terms – You must first contact our Customer Service Department at **713-973-6905** to acquire a Return Merchandise Authorization (RMA) number in order to return the product(s). Please have the following information available when requesting an RMA number:

- The contact name and phone number of the tower owner or
- The contact name and phone number of the contractor
- The site name and number
- The part number(s)
- The serial number(s) (if any)
- A description of the problem
- The billing information
- The Ship To address

This RMA number must be clearly visible on the outside of the box. If the RMA number is not clearly labeled on the outside of the box, your shipment will be refused. Please ensure the material you are returning is packaged carefully. **The warranty is null and void if the product(s) are damaged in the return shipment.**

All RMAs must be received by TWR LIGHTING®, INC., 10810 W. LITTLE YORK RD. #130, HOUSTON, TX 77041-4051, within 30 days of issuance.

Upon full compliance with the Return Terms, TWR® will replace, repair and return, or credit product(s) returned by the customer. It is TWR®'s sole discretion to determine the disposition of the returned item(s).

TWR Lighting,® Inc. HARK

Enlightened Technology®

AA0M3XFRSSIND CONTROLLER

Warranty & Return Policy
(continued)

RMA Replacements – Replacement part(s) will be shipped and billed to the customer for product(s) considered as Warranty, pending return of defective product(s). When available, a certified reconditioned part is shipped as warranty replacement with a Return Merchandise Authorization (RMA) number attached. Upon receipt of returned product(s), inspection, testing, and evaluation will be performed to determine the cause of defect. The customer is then notified of the determination of the testing.

- Product(s) that is deemed defective and/or unrepairable and covered under warranty - a credit will be issued to the customer's account.
- Product(s) found to have no defect will be subject to a **$75.00 per hour testing charge (1 hour minimum), which will be invoiced to the customer.** At this time the customer may decide to have the tested part(s) returned and is responsible for the return charges.
- Product(s) under warranty, which the customer does not wish returned, the customer will be issued a credit against the replacement invoice.

RMA Repair & Return – A Return Merchandise Authorization (RMA) will be issued for all part(s) returned to TWR® for repair. Upon receipt of returned product(s), inspection, testing, and evaluation will be performed to determine the cause of defect. The customer is then notified of the determination of the testing. If the returned part(s) is deemed unrepairable, or the returned part(s) is found to have no defect, the customer will be subject to a **$75.00 per hour testing charge (1 hour minimum), which will be invoiced to the customer.** Should the returned parts be determined to be repairable, a written estimated cost of repair will be sent to the customer for their written approval prior to any work being performed. In order to have the tested part(s) repaired and/or returned, the customer must issue a purchase order and is responsible for the return shipping charges.

RMA Return to Stock – Any product order that is returned to TWR® for part(s) ordered incorrectly or found to be unneeded upon receipt by the customer, the customer may be required to pay a minimum **20% restocking fee**. Product returned for credit must be returned within 60-days of original purchase, be in new and resalable condition, and in original packaging. Once the product is received by TWR it's condition will be evaluated and a credit will be issued only once it is determined that the RMA Return Terms have been met.

Credits – Credits are issued once it is determined that all of the Warranty and Return Terms are met. All credits are processed on Fridays. In the event a Friday falls on a Holiday, the credit will be issued on the following Friday.

TWR Lighting,® Inc. HARK

Enlightened Technology®

AA0M3XFRSSIND CONTROLLER

Warranty & Return Policy
(continued)

Freight – All warranty replacement part(s) will be shipped via ground delivery and paid for by TWR®. Delivery other than ground is the responsibility of the customer.

REMEDIES UNDER THIS WARRANTY ARE LIMITED TO PROVISIONS OF REPLACEMENT PARTS AND REPAIRS AS SPECIFICALLY PROVIDED. IN NO EVENT SHALL **TWR®** BE LIABLE FOR ANY OTHER LOSSES, DAMAGES, COSTS, OR EXPENSES INCURRED BY THE CUSTOMER, INCLUDING, BUT NOT LIMITED TO, LOSS FROM FAILURE OF THE PRODUCT(S) TO OPERATE FOR ANY TIME, AND ALL OTHER DIRECT, INDIRECT, SPECIAL, INCIDENTAL, OR CONSEQUENTIAL DAMAGES, INCLUDING ALL PERSONAL INJURY OR PROPERTY DAMAGE DUE TO ALLEGED NEGLIGENCE, OR ANY OTHER LEGAL THEORY WHATSOEVER. THIS WARRANTY IS MADE BY **TWR®** EXPRESSLY IN LIEU OF ALL OTHER WARRANTIES, WHETHER EXPRESSED OR IMPLIED. WITHOUT LIMITING THE GENERALITY OF THE FORGOING, **TWR®** MAKES NO WARRANTY OF MERCHANTABILITY OR FITNESS OF THE PRODUCT(S) FOR ANY PARTICULAR PURPOSE. **TWR®** EXPRESSLY DISCLAIMS ALL OTHER WARRANTIES.

M.2017.A.AA0M3XFRSSIND V17491
NEW 6-7-17

TWR Lighting,® Inc. HARK

Enlightened Technology®

AA0M3XFRSSIND CONTROLLER

RETURN MERCHANDISE AUTHORIZATION (RMA) FORM

RMA#:_____**DATE:**_____

CUSTOMER:_____

_____

CONTACT:_____**PHONE NO.:**_____

ITEM DESCRIPTION (PART NO.):_____

_____

MODEL NO.:_____**SERIAL NO.:**_____

ORIGINAL TWR INVOICE NO.:_____**DATED:**_____

DESCRIPTION OF PROBLEM:_____

_____

_____

_____

SIGNED_____**DATE NEEDED**_____

RETURN ADDRESS:_____

_____

M.2017.A.AA0M3XFRSSIND V17491
NEW 6-7-17

TWR Lighting,® Inc. HARK

Enlightened Technology®

AA0M3XFRSSIND CONTROLLER

RETURN MERCHANDISE AUTHORIZATION (RMA) FORM

RMA#:_____DATE:_____

CUSTOMER:_____

_____

CONTACT:_____PHONE NO.:_____

ITEM DESCRIPTION (PART NO.):_____

_____

MODEL NO.:_____SERIAL NO.:_____

ORIGINAL TWR INVOICE NO.:_____DATED:_____

DESCRIPTION OF PROBLEM:_____

_____

_____

_____

SIGNED_____DATE NEEDED_____

RETURN ADDRESS:_____

_____

M.2017.A.AA0M3XFRSSIND V17491
NEW 6-7-17

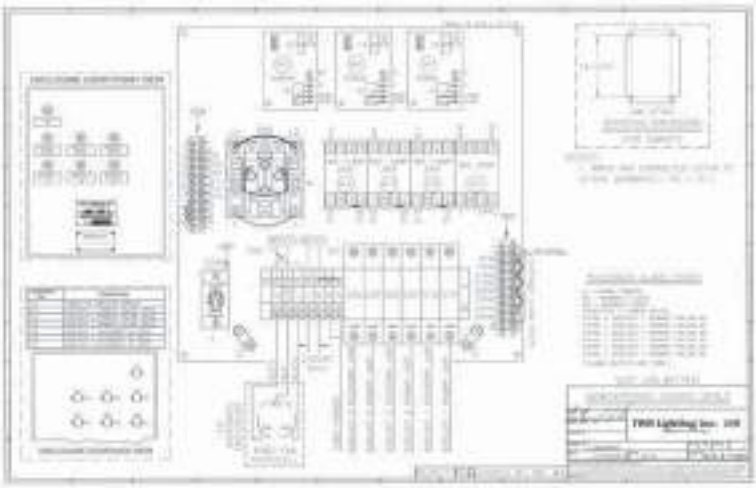

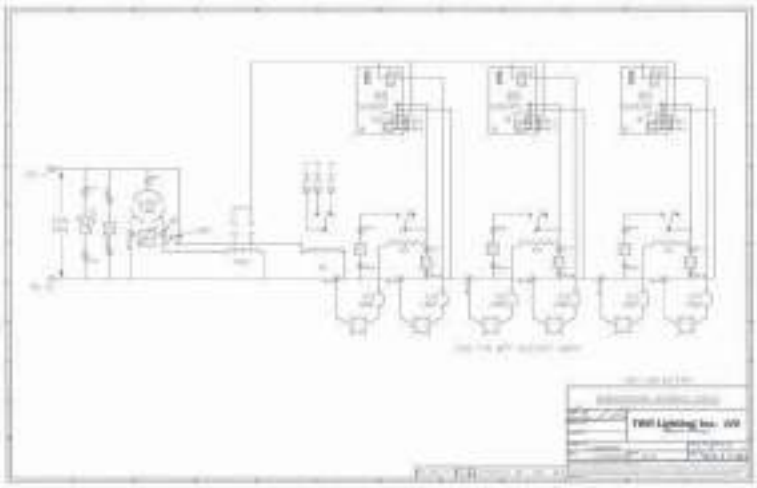

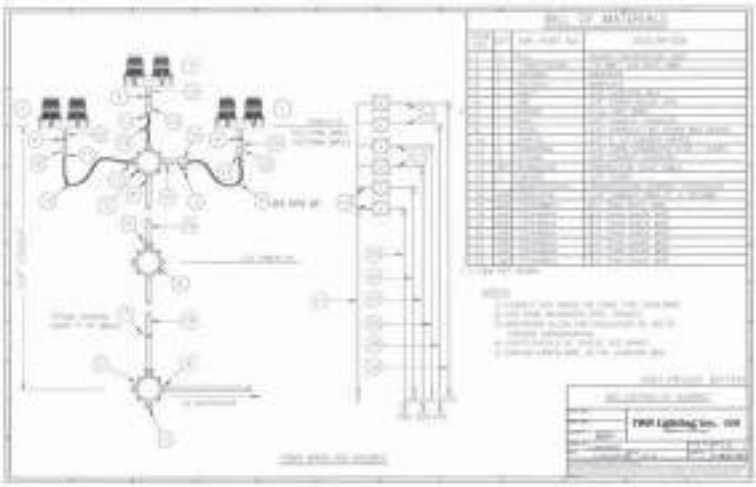

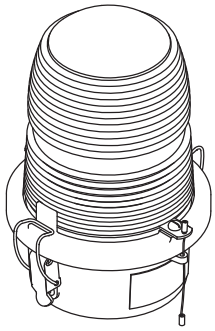

PARTS LIST			
ITEM	QTY	PART NUMBER	DESCRIPTION
1	1	AP35222	RED SIDELIGHT GLASS
2	1	105C	SINGLE SIDELIGHT BODY
3	1	106C	LENS HOLDER RING
4	2	12V245	OL LENS CLIP
5	2	832X14PH	8-32 X 1/4" PH SS SLOT SCREW
6	2	HC255SS	SIDELIGHT LATCH
7	1	7X7SS	1/16 HOL 7X7 S.S. WIRE
8	2	A1A	STAKON CRIMP
9	1	OLG	OL GASKET
10	1	TWR19062	SIDELIGHT RECEPTACLE
11	4	18PRSS	1/8 X .40 SS POP RIVET
12	1	A314	3/4" CONDUIT LOCKNUT GALV.
* 13	2	104G	WHITE TEFLON WASHER
14	2	832X34PH	8-32 X 3/4" S.S. RH SLOT
15	1	100327	OL1 SERIAL NUMBER LABEL
~ 16	1	116A21TS	116W-120V LAMP (TYP.)

* = PART NOT SHOWN
~ = PART SOLD SEPARATELY

NOTE:
1. FAA APPROVED LIGHT USES THE 116A21TS LAMP. OTHER LAMPS ARE AVAILABLE TO MEET YOUR APPLICATION.

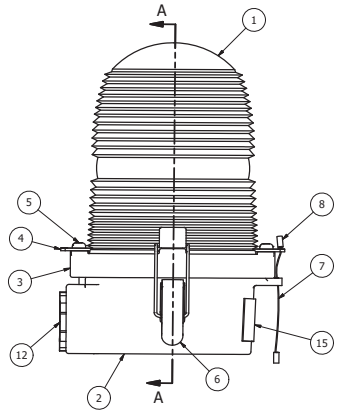

SECTION A-A

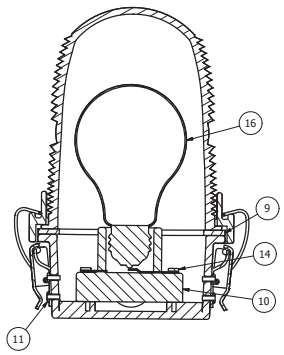

DRAWN vhernandez	2/13/2012	TWR Lighting, Inc. Enlightened Technology
CHECKED		TITLE: 3/4" OL1 SIDE HUB ASSEMBLY DETAIL (PART#OL1)
QA		
MFG		
APPROVED		SIZE B / DWG NO 279-OL / REV C
		SCALE 2/3 / SHEET 1 OF 1

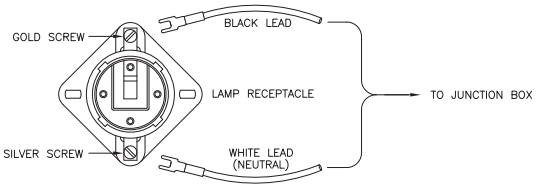

SIDELIGHT RECEPTACLE WIRING

TWR Lighting, Inc.
Enlightened Technology

DATE:	LTR.	REVISION
7/2/98	A	CHANGED LABEL

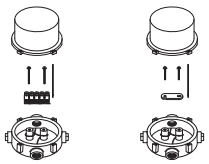

JB-5 AND JB-O
3/4" JUNCTION BOX

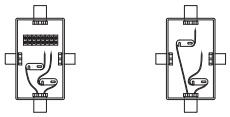

JB-8 AND JB-8SR
1" JUNCTION BOX

USING THIS JUNCTION BOX METHOD SPACING IS 100 FEET MAXIMUM.

AWG WIRE SIZE	MAX. NUMBER WIRES IN 3/4" CONDUIT	MAX. NUMBER WIRES IN 1" CONDUIT	WIRE AREA SQ. INCHES	WEIGHT PER 100 FEET
12 THHN	16	26	0.0117	2.50
10 THHN	10	17	0.0184	4.10
8 THHN	6	9	0.0373	6.70
6 THHN	4	7	0.0519	10.30
4 THHN	2	4	0.0845	16.20

NOTES:

1) DRAWING ILLUSTRATES METHOD OF STRAIN RELIEVING WIRE. USE THIS METHOD ON ALL JUNCTION BOXES.
2) THE NATIONAL ELECTRICAL CODE-ARTICLE 300-19-B3 REQUIRES CONDUCTORS IN A VERTICAL CONDUIT BE SUPPORTED TO RELIEVE STRAIN ON TERMINAL BLOCK CONNECTIONS.
3) SKETCH ILLUSTRATES METHOD OF STRAIN RELIEVING A SINGLE CONDUCTOR. SEVERAL CONDUCTORS MAY BE GROUPED TOGETHER.
4) CONDUCTORS MAY BE MIXED BUT SHOULD NOT TAKE UP MORE THAN 40% OF CONDUIT'S INSIDE AREA.

JUNCTION AND STRAIN RELIEF BOXES

TWR Lighting, Inc.
Enlightened Technology

DATE:	LTR.	REVISION
9/29/00	A	UPDATED NOTES

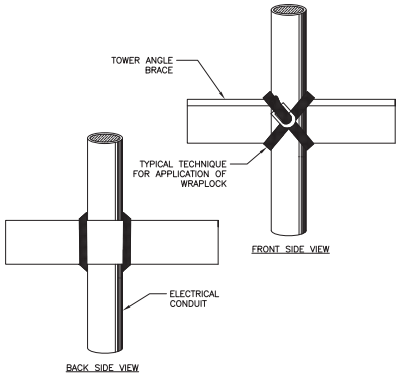

WRAPLOCK FASTENING DETAIL

TWR Lighting, Inc.
Enlightened Technology

TWR Lighting, Inc.

Enlightened Technology

EQUIPMENT HANDLING & STORAGE RECOMMENDATIONS

[illegible]

4300 WINDFERN RD #100 – HOUSTON TX 77041-8943 - **VOICE:** 713 973 6905 - **FAX:** 713 973 9352 - **WEB:** twrlighting.com

WARNING: This manual should be handled according to the national laws. It is a substantial part of the Flue Gas Silencer and, according to the present laws, should be available for consultancy until after dismantling the Flue Gas Silencer.

The manual should remain nearby the Flue Gas Silencer in a safe, dry and sheltered place. It should be available for consultancy at all times.

In case the manual is damaged the user of the Flue Gas Silencer should contact Aarding Thermal Acoustics B.V. for a new copy of this manual.

© Aarding Thermal Acoustics B.V. NL 2002
Industrieweg 59
P.O. Box 65
8070 AB Nunspeet (NL)
Tel: +31-341-252635
Fax: +31-341-262112
Website: Http://www.ata-bv.com

All rights reserved. No part of this publication may be reproduced, stored in a retrieval system or transmitted in any form or by any means, without the prior permission in writing from Aarding Thermal Acoustics B.V.

Aarding Thermal Acoustics B.V. cannot accept responsibility for errors or omissions.

CONTENTS

0. Preface
- 0.1 Purpose of the manual
- 0.2 Place of the manual
- 0.3 Focus group, who should read this manual
- 0.4 Lay out of the manual

1. Introduction
- 1.1 Aarding Thermal Acoustics B.V.
- 1.2 Product description
- 1.3 Purpose of use
- 1.4 Operating conditions
- 1.5 Operating personnel

2. Safety
- 2.1 Preface
- 2.2 Residual risk and hazards
- 2.3 Safety precautions

3. Cleaning and maintenance
- 3.1 Preface
- 3.2 Maintenance / Inspection
- 3.4 Rejection

4. Installation and first start
- 4.1 Preface
- 4.2 Installation
- 4.3 Inspection before first use

APPENDIX I GA Drawing P15610-60-001

0. Preface

0.1 Purpose of the manual

This manual contains the necessary information for operation, maintenance, handling, transport, erection, commissioning, repair and disassembly of the Flue Gas Silencer.

Prior to operating and maintaining the Flue Gas Silencer and in order to reduce the risk of dangerous situations each person who will come in contact with the Flue Gas Silencer has to read and understand this manual. Aarding Thermal Acoustics B.V. cannot accept responsibility for dangerous situations as a result of all use of the Flue Gas Silencer under conditions other than stated in this manual. Special attention should be given to recommendations in this manual.

In the rest of this manual the Flue Gas Silencer will also be mentioned as the "Silencer". Aarding Thermal Acoustics B.V. will also be called the "manufacturer" or the "supplier".

0.2 Place of the manual

This manual is a part of the Technical Construction Dossier (TCD) that is created by the manufacturer for this equipment. The manual is given to the direct user of the silencer. The TCD with a.o. the lay out drawing, part drawings and part lists, test- and inspection reports, the used quality system, risk evaluation etc. is not given to the direct user.

0.3 Focus group, who should read this manual

This manual is intended for personnel who will work with the Flue Gas Silencer on a daily base, and for people who will maintain the Flue Gas Silencer. This manual indicates how the Silencer should be used and how it should not be used (= improper use). Besides this the manual gives an indication for the maintenance intervals and it gives suggestions for proper maintain material.

0.4 Lay out of the manual

This manual consists of separate chapters, each chapter has its own (separate) target group. It goes without saying that all chapters in this manual are important, not only the chapters referring to certain tasks: each person working with the Flue Gas Silencer in any way should be familiar with the contents of the complete manual.

In this manual the following pictograms are used:

Hint: This symbol indicates special information on either the best possible use of the Flue Gas Silencer or how to facilitate operation of the Flue Gas Silencer.

Mind this: This symbol indicates potential problems. Comply with the instructions in order to avoid these problems.

WARNING: This symbol indicates potential dangers to either the Flue Gas Silencer or people. Comply with the instructions in order to avoid damage or injury.

1 Introduction

1.1 Aarding Thermal Acoustics B.V.

In the nineties Aarding translated its knowledge of thermal acoustics for the military market into a form suitable for use by various industrial markets. Within the energy market in particular Aarding Thermal Acoustics has already won its spurs. We work in close collaboration with our clients to find innovative solutions. Our expertise in noise control, fluid dynamics and heat technology is used to develop and supply products and services for sound absorbing and muffling, sound insulation and thermal insulation. In the thermal power stations market Aarding Thermal Acoustics has developed unique internal insulation systems. These systems are used worldwide to enable the heat produced in energy generation to be recycled. For the acoustics market sound absorbers and blow-off silencers are developed and supplied. These sound absorbers and silencers ensure that people can live and work peacefully in the vicinity of industrial installations. Aarding Thermal Acoustics is able to take care of the entire process, including development, production, delivery and installation.

Thermal insulation systems

In the thermal power stations market Aarding Thermal Acoustics has developed unique internal insulation systems. These systems are used worldwide to enable the heat produced in energy generation to be recycled. The thermal insulation systems can be delivered as a modular package to destinations anywhere in the world. The thermal insulation systems have already found their application in: waste-gas boilers of thermal power stations, burner chambers, industrial furnaces and by-pass systems. If the modular packages are ordered the following materials will be supplied in addition to the engineering:

- structural members
- insulation material
- heat-resistant prefab sheeting
- installation instructions.

Off course the delivery can be combined with other services and materials such as casing / ducting steel constructions.

Blow off silencers

For the acoustics market we develop sound absorbers and blow-off silencers . These sound absorbers and silencers ensure that people can live and work peacefully in the vicinity of industrial installations. When steam and gases escape under high pressure a lot of noise is made. Noise levels from 100 to 150 dB(A) are then not unusual. The exact moment of blow-off cannot be predicted when safety devices are used, which means that shock reactions can occur. When gases or steam are being blown off (e.g. discharging of autoclaves) the present environmental regulations require the use of a silencer or muffler. This ensures that the noise emission standard is not exceeded. Use of an Aarding Thermal Acoustics blow-off silencer, type AAT, ensures that the noise production is kept to an acceptable level. During the blow-off a considerable amount of energy is released within a short time. This fact imposes stringent requirements on the construction of a blow-off silencer. Aarding Thermal Acoustics, working in close co-operation with ATDEC and TIG, has developed the so-called "AAT- silencer". Both the construction and the soundproofing meet the most stringent requirements. Thanks to the compact design the dimensions and the weight are both kept to a minimum. With this type of silencer acoustic insulation values as low as 60 dB(A) can be achieved.

The type AAT silencer is based on the principle of allowing gas or steam to escape through a large number of very small openings. As a result, only high-frequency sound arises. Often this sound lies wholly or partially above the limit of audibility - the so-called transformation principle. The remaining, undesirable sound is muffled by sound absorption.

1.2 Product description

Sound absorbers

For the acoustics market we supply sound absorbers. These sound absorbers and silencers ensure that people can live and work peacefully in the vicinity of industrial installations. Fans, diesel motors, gas turbines and other industrial machines are often very noisy. The solution to this noise is acoustic insulation. This can be achieved by using the Aarding Thermal Acoustics coulisse sound absorbers. These consist of panels with sound-absorbent material which are fitted in the intake or outlet channels. The noise level is then kept to an acceptable level. The intake air or outlet gases are guided through the sound absorber while the noise is reduced. A combination of years of experience and modern mathematical models results in the desired noise level. There's an optimum sound absorber configuration for every situation. In designing the absorbers the practical situation and the problems that the absorbers were being designed to solve were not lost sight of. Each delivery is accompanied by the necessary acoustic information and absorber configuration. Acoustic calculations are also performed to determine the required degree of acoustic insulation in advance.

1.3 Purpose of use

The Flue Gas Silencer is exclusively designed for reducing noise in the outlet duct of an "Heat Recovery Steam Generator" (HRSG) under conditions as stated in Appendix I. Every use of the Flue Gas Silencer other than stated in this manual, can cause a working situation that is not safe for either the Flue Gas Silencer, the system or the operator(s).

1.4 Operating conditions

The Flue Gas Silencer is exclusively designed for reducing noise in the outlet duct of an "Heat Recovery Steam Generator" (HRSG) under conditions as stated in Appendix I. Any application, other than specified in Appendix I or one going beyond the above mentioned capacity is unauthorised. The manufacturer is not liable for damages resulting from such applications. The user alone has to bear the risk.

1.5 Operating personal

The Flue Gas Silencer is designed according to the state-of-the-art technology and is in line with applicable safety regulations. However, the general risk of personal injury or damage to the silencer cannot be completely eliminated. Therefore the silencer may only be installed and maintained by competent and qualified personnel and only be used for the authorised application. Therefore a careful study of this manual should be made before attempting to use or service the Flue Gas Silencer, and particular attention should be paid to the safety instructions.

2 Safety

2.1 Preface

In this chapter the safety instructions in relation to the Flue Gas Silencer will be explained. A careful study of this chapter should be made before attempting to install, operate or service the Flue Gas Silencer. Particular attention should be paid to these safety instructions.

Hint:	If safety instructions mentioned in this chapter are not clear, ask the supplier for more information.

The most important residual risk and hazards in relation to use of the Flue Gas Silencer are summarised in § 2.2. In § 2.3 the safety devices are described with witch the Flue Gas Silencer is completed. Next in § 2.4 the safety precautions witch the operator of the Flue Gas Silencer has to obey are explained.

2.2 Residual risk and hazards

The following residual risk and hazards in relation to the Flue Gas Silencer can be indicated.

- Large mass of the silencer (parts). Therefore it is not easy to handle the flue gas silencer (parts). Special attention should be given to this during erection and maintenance.

Hint:	Be sure to use proper lifting devices and lifting material. Do not stand under the silencer (parts) while the are lifted during installation and eventual maintenance periods.

2.3 Safety precautions

For using the Flue Gas Silencer in a safe way it is necessary to uphold a number of safety precautions; the precautions are summarised below.

GENERAL

- Access to the Flue Gas Silencer and the area near the Flue Gas Silencer is only permitted to authorized personnel.
- Local rules and Plant rules, existing for general safety, should be obeyed.

WARNING:	Inspection every 6 months, cleaning and maintenance normally during boiler maintenance periods.

PERSONAL PROTECTION

- Aarding Thermal Acoustics recommends the use of safety shoes, ear protection and safety glasses while remaining close to the Flue Gas Silencer.

3 Cleaning and maintenance

3.1 Preface

The Flue Gas Silencer is designed to minimise the maintenance work.

3.2 Maintenance

WARNING:	The silencer may only be maintained and (dis-)assembled by competent and qualified personnel. Therefore a careful study of this manual should be made before attempting to service the Flue Gas Silencer, and particular attention should be paid to the safety instructions. Maintenance work is only allowed during boiler maintenance periods.

Hint:	Be sure to use proper lifting devices and lifting material. Do not stand under the silencer (parts) while the are lifted during installation and eventual maintenance periods.

3.3 Inspection

Once each 6 months

- A visual inspection of the Flue Gas Silencer for defects.
- Check if the acoustic absorption material is in place.
- Check if the supports are in place.
- Corrosion check on Flue Gas Silencer.
- Corrosion check on Supports.

3.4 Disassembly

Disassemble the Flue Gas Silencer with respect to conditions stated in § 3.2 Maintenance.

4 Installation and first start

4.1 Preface

In this chapter information is given about the preparation for use of the Flue Gas Silencer. In § 4.2 the main steps for the installation are described. In § 4.3 the checkpoints are given for the inspection of the Flue Gas Silencer prior to the first use of the silencer.

4.2 Installation

Hint:	If the Flue Gas Silencer is lifted by crane, use a "Spreader Beam" to eliminate the risk of damaging the silencer.

- Install bottom, side & top supports.
- Install bottom row of splitter panels (Tag numbers according GA drawing).
- Remove lifting lugs and install the connection rods.
- Install the top row of the splitters panels (Tag numbers according GA drawing).
- Install flat 75x6 on upper support (see detail A: check expansion space).

4.3 Inspection before first use

Check the Flue Gas Silencer with respect to the following points:

- Check if the Flue Gas Silencer is installed properly as per installation drawing and / or GA drawing, Appendix I.
- Check if operating conditions are as described in the Appendix I.

ภาคผนวก ข.44

เอกสารรับรองความปลอดภัยของหม้อไอน้ำ

บริษัท อมตะ บี.กริม เพาเวอร์ (ระยอง) 5 จำกัด
Amata B.Grimm Power (Rayong) 5 Limited
5 ถนนกรุงเทพกรีฑา แขวงหัวหมาก เขตบางกะปิ กรุงเทพฯ 10240
5 Krungthepkreetha Road, Huamak, Bangkapi, Bangkok 10240
Tel. +66 (0) 2710 3400, Fax +66 (0) 2378 4287
เลขประจำตัวผู้เสียภาษีอากร 0105553104383

ที่ ABPR5/026/2568

วันที่ 13 พฤษภาคม พ.ศ. 2568

เรื่อง ขอส่งเอกสารด้านความปลอดภัย อาชีวอนามัย และสภาพแวดล้อมในการทำงาน

เรียน ผู้อำนวยการสวัสดิการและคุ้มครองแรงงาน จังหวัดระยอง

สิ่งที่ส่งมาด้วย รายละเอียดแจ้งกำหนดการจัดอบรมทบทวนความรู้ผู้ควบคุมประจำหม้อน้ำ

สำเนา

บริษัท อมตะ บี.กริม เพาเวอร์ (ระยอง) 5 จำกัด ตั้งอยู่ในนิคมอุตสาหกรรมอมตะซิตี้ ระยอง เลขที่ 7/507 หมู่ 6 ตำบลมาบยางพร อำเภอปลวกแดง จังหวัดระยอง 21140 ประเภทกิจการผลิตและจำหน่ายกระแสไฟฟ้าและไอน้ำเพื่อการอุตสาหกรรม เลขทะเบียนโรงงานเลขที่ 8225060022558 (น.88(2)-2/2558-นอต.) ขอส่งเอกสารด้านความปลอดภัย อาชีวอนามัย และสภาพแวดล้อมในการทำงาน ดังนี้

ลำดับที่	รายการเอกสาร	หมายเหตุ
1	รายละเอียดแจ้งกำหนดการจัดอบรมทบทวนความรู้ผู้ควบคุมประจำหม้อน้ำประกอบด้วย - กำหนดการฝึกอบรม - ประวัติวิทยากร - รายชื่อผู้เข้ารับการอบรม - เอกสารหลักฐานการฝึกอบรมที่ผ่านมา โดยจัดอบรม รุ่นที่ 1 : วันที่ 5 มิถุนายน 2568 และ รุ่นที่ 2 : วันที่ 9 มิถุนายน 2568	เอกสารแนบ

จึงเรียนมาเพื่อพิจารณา

ขอแสดงความนับถือ

(นายสาโรช อรุณไพโรจน์กุล)
รองกรรมการผู้จัดการใหญ่ สายงานลูกค้าอุตสาหกรรมสัมพันธ์และปฏิบัติการโรงไฟฟ้า
บริษัท อมตะ บี.กริม เพาเวอร์ (ระยอง) 5 จำกัด

สำนักงานสวัสดิการและคุ้มครองแรงงานจังหวัดระยอง
ได้รับเอกสารแล้ว
(นายทศพล พลคำมาก)
นักวิชาการแรงงานชำนาญการ
21 พ.ค. 2568

สำเนา

รายงานผลการตรวจทดสอบหม้อไอน้ำ

บริษัท อมตะ บี.กริม เพาเวอร์ (ระยอง) 5 จำกัด

หม้อน้ำหมายเลข 1 (HRSG 51)

หมายเลขเครื่อง 17491 – 1A

HRSG STEAM BOILER

ตรวจทดสอบเมื่อ วันที่ 6 เมษายน 2568

หนังสือรับรองของผู้ประกอบวิชาชีพวิศวกรรมควบคุม

เรื่อง ความเห็นเกี่ยวกับการให้ความเห็นชอบในการขยายระยะเวลาการตรวจทดสอบภายในหม้อน้ำ เพื่อประกอบการพิจารณาให้ความเห็นชอบในการตรวจสอบภายในหม้อน้ำทุกระยะเวลาเกินกว่า 1 ปี แต่ไม่เกิน 5 ปี ต่อการตรวจสอบหนึ่งครั้ง

เรียน ผู้อำนวยการสำนักงานใบอนุญาตความปลอดภัย

วันที่ 6 เมษายน 2568

ข้าพเจ้า นายอิสรา พูนภักดี อาชีพ วิศวกร อายุ 52 ปี ที่ทำงาน บริษัท ไออาร์พี เอ็นจิเนียริ่งส์ จำกัด ที่อยู่เลขที่ 52/8 หมู่ 2 ตำบลบ้านสวน อำเภอเมืองชลบุรี จังหวัด ชลบุรี โทร 081 4045152 ได้รับอนุญาตให้ประกอบวิชาชีพวิศวกรรมควบคุม ตามพระราชบัญญัติวิศวกร พ.ศ. ๒๕๔๒ ประเภท/ระดับ สามัญวิศวกร ทะเบียนเลขที่ สก 3748 ตั้งแต่วันที่ 26 กรกฎาคม 2565 หมดอายุวันที่ 25 กรกฎาคม 2570 ได้รับอนุญาตให้ขึ้นทะเบียนเป็นวิศวกรตรวจทดสอบหม้อน้ำหรือหม้อต้มที่ใช้ของเหลวเป็นสื่อนำความร้อน กับกรมโรงงานอุตสาหกรรม ทะเบียนเลขที่ 6-65-1195 หมดอายุวันที่ 31 ธันวาคม 2569 และไม่อยู่ระหว่างถูกพักหรือเพิกถอนใบอนุญาตฯ

ข้าพเจ้าเป็นผู้ตรวจทดสอบรับรองความปลอดภัยในการใช้หม้อน้ำ หมายเลข 1 (HRSG51) สร้างโดย Vogt Power International อัตราการผลิต 66.384 ตันต่อชั่วโมง (สำหรับ) HP และ 12.74 ตันต่อชั่วโมง (สำหรับ) LP ซึ่งติดตั้ง ณ บริษัท อมตะบี.กริม เพาเวอร์ (ระยอง) 5 จำกัด เลขที่ 7/507 หมู่ที่ 6 ตำบลมาบยางพร อำเภอปลวกแดง จังหวัดระยอง ทะเบียนผู้ประกอบอุตสาหกรรมเลขที่ 82250600225587 (ม.88(2) – 2/2558 นอค)

ข้าพเจ้าได้ตรวจทดสอบอุปกรณ์ความปลอดภัย สภาพภายในและภายนอกตามเอกสารเครื่องของหม้อน้ำ เมื่อวันที่ 6 เมษายน 2568 อย่างถูกต้องตามหลักวิศวกรรมแล้ว มีความเห็นว่าหม้อน้ำเครื่องนี้สามารถใช้งานได้อย่างปลอดภัยในระยะเวลา 3 ปี

ข้าพเจ้าได้ลงลายมือชื่อ พร้อมแนบสำเนาใบประกอบวิชาชีพควบคุมไว้เป็นหลักฐาน

ลงชื่อ.....วิศวกร

(นายอิสรา พูนภักดี)

หมายเหตุ : 1. หม้อน้ำหมายเลข 1 (HRSG51)

2. หม้อน้ำหมายเลขเครื่อง (Serial Number) 17491 – 1A ให้หมายถึง หมายเลข 17491 – 1A หมายเลข 17491 – 1B, หมายเลข 17491 – C , หมายเลข LPEC17491-D อุปกรณ์อื่นๆของหม้อไอน้ำภายใต้หมายเลขเครื่อง (Serial Number) 17491 – 1A

ลงชื่อ.....

(นายอิสรา พูนภักดี)

วิศวกรผู้ตรวจทดสอบ

สำนักเทคโนโลยีความปลอดภัย

กรมโรงงานอุตสาหกรรม

รหัส.....
เลขรับที่ ..... วันที่ .....
(ช่องที่ 1) สำหรับเจ้าหน้าที่กรอก

เอกสารรับรองความปลอดภัยในการใช้หม้อไอน้ำ

ข้าพเจ้า นายอิสรา พูนภักดี อายุ 52 ปี อาชีพ วิศวกร

พักอยู่บ้านเลขที่ 528 หมู่ 2 ตรอก/ซอย - ถนน -

ตำบล/แขวง บ้านสวน อำเภอเขต เมือง จังหวัด ชลบุรี โทรศัพท์ 081-4045-152

สถานที่ทำงาน บริษัทไดอาร์พีเอ็นจิเนียริ่ง จำกัด ตั้งอยู่ ณ 528 ม.2 ต.บ้านสวน อ.เมือง จ.ชลบุรี โทรศัพท์ 081-4045-152

ได้รับใบอนุญาตประกอบวิชาชีพวิศวกรรมควบคุม สาขาวิศวกรรมเครื่องกล ตามพระราชบัญญัติวิศวกร พ.ศ.2542

เลขทะเบียน สกว.ก/พค สก.3748 ตั้งแต่วันที่ 26 กรกฎาคม 2565 ถึงวันที่ 25 กรกฎาคม 2570 และไม่อยู่ในระหว่างถูกสั่งพักหรือเพิกถอนใบอนุญาตฯ ตามสำเนาบัตรประจำตัวที่แนบมาพร้อมนี้ ได้รับใบอนุญาตให้ขึ้นทะเบียนเป็นวิศวกรตรวจทดสอบหม้อไอน้ำหรือหม้อต้มฯ เลขทะเบียน 6 - 65 - 1195 หมดอายุวันที่ 31 ธันวาคม พ.ศ. 2569

ข้าพเจ้าได้ทำการอัดน้ำทดสอบและตรวจสภาพหม้อไอน้ำของโรงงาน บริษัท ยมตะ บี.กริม เพาเวอร์ (ระยอง) 5 จำกัด

ซึ่งตั้งอยู่เลขที่ 7/507 หมู่ที่ 6 ตำบลแขวง มาบยางพร อำเภอเขต ปลวกแดง จังหวัด ระยอง โทรศัพท์

ประกอบกิจการ ผลิตและจำหน่ายกระแสไฟฟ้าและไอน้ำ ทะเบียนโรงงานเลขที่ 82250600225587 (น.88(2) – 2 / 2558 นอก) หมดอายุวันที่

ตรวจทดสอบเมื่อวันที่ 6 เมษายน 2568 เวลา 8:00 - 17.00 น โรงงานนี้มีหม้อไอน้ำทั้งหมด 2 เครื่อง

หม้อไอน้ำเครื่องนี้หมายเลข 1 (HRSG51) ขณะตรวจ หม้อไอน้ำเครื่องอื่นอยู่ในสภาพ ☐ กำลังใช้งาน ■ หยุด

ข้าพเจ้าได้ตรวจทดสอบสภาพหม้อไอน้ำเครื่องนี้ โดยการอัดน้ำ (Hydrostatic Test) ที่ความดันไม่น้อยกว่าเกณฑ์การอัดน้ำทดสอบตามที่ระบุในหน้า 4 ของเอกสารนี้ และขอรับรองว่าหม้อไอน้ำและอุปกรณ์ทุกส่วนของหม้อไอน้ำเป็นไปตามรายละเอียดแสดงไว้ในหน้า 2 และ 3 ของเอกสารนี้ ข้าพเจ้าได้ทำการตรวจสภาพและหรือทดสอบอย่างถูกต้องตามหลักวิศวกรรม และหม้อไอน้ำเครื่องนี้สามารถใช้งานได้อย่างปลอดภัย **เป็นเวลา 3 ปี นับตั้งแต่ตรวจทดสอบ** ที่ความดัน ซึ่งได้ปรับตั้งลิ้นนิรภัยให้ปิดระบายไอที่ความดันไม่เกิน 89.6 barg (HP Drum) และ 12 และ 12.8 barg (LP Drum) ข้าพเจ้าจึงลงลายมือชื่อไว้เป็นหลักฐาน

หมายเลขเครื่อง 17491 – 1A จาก Name Plate ; HP17491-1A, HPEC 17491-1B , LP 17491-1C, LPEC17491-1D

(ลงชื่อ) .....

(นายอิสรา พูนภักดี)

วิศวกรผู้ตรวจทดสอบ

ผู้รับใบอนุญาตประกอบกิจการโรงงาน

(ลงชื่อ) ฐิติรัตน์ เจริญรัตน์

(บริษัท ยมตะ บี.กริม เพาเวอร์ (ระยอง) 5 จำกัด)

ผู้รับใบอนุญาตประกอบกิจการโรงงาน

ก่อนการตรวจทดสอบฯ โปรดอ่านรายละเอียดในหน้า 4 ของเอกสารนี้

หม้อไอน้ำเครื่องนี้ เป็นแบบหม้อไอน้ำ ☐ เรือ ☐ รถไฟ ☐ ลูกหมู ■ ท่อน้ำขวาง ☐ ท่อไฟนอน

☐ ดัดแปลงเตาจากหม้อไอน้ำแบบ - อื่น ๆ (ระบุ) ☑ HRSG ใช้งานมาแล้ว 8 ปี

หมายเลขเครื่อง 17491-1A สร้างโดย Vogt Power International โดยออกแบบความดันสูงสุดไว้ที่ 89.6 barg (HP) และ 12.4 barg (LP)

อุณหภูมิ 528°C (HP), 247°C (LP) อัตราการผลิตไอ 66,384 T/hr(HP), 12,740 T/hr(LP) พื้นที่ผิวรับความร้อน 36,785 ตร.ม (HP) 13,672 ตร.ม (LP)

แรงม้าหม้อไอน้ำ 5,055.7 BHP การเคลื่อนย้ายหม้อไอน้ำ ■ ไม่เคย ☐ เคย เมื่อ .....

ชื่อผู้ควบคุมหม้อไอน้ำ นายวีรยุทธ เกิดสุข ขึ้นทะเบียนฯ เลขที่ 314-778-41637 หมดอายุ 31 ธันวาคม 2569

ชื่อผู้ควบคุมหม้อไอน้ำ นายสมบุญ ช่างบุตร ขึ้นทะเบียนฯ เลขที่ 314-778-38359 หมดอายุ 31 ธันวาคม 2569

ชื่อผู้ควบคุมหม้อไอน้ำ นายสิทธา รัตนสำรวจ ขึ้นทะเบียนฯ เลขที่ 314-778-50318 หมดอายุ 31 ธันวาคม 2569

ตัวหม้อไอน้ำ

การต่อแผ่นเหล็กหม้อไอน้ำเป็นแบบ ☐ เชื่อม ☐ หมุดย้ำ เปลือกหม้อไอน้ำหนา LP Drum = 12.7 mm. และ HP Drum = 60.3 mm.

ฉนวนหุ้มหม้อไอน้ำ ☐ ไม่มี ☐ มี เป็นแบบ ☐ ใยแก้ว ☐ Asbestos ☐ อิฐทนไฟ ■ อื่น ๆ Kaowool Blanket

ขนาดหม้อไอน้ำ ∅ 3.3 x 11.88 x 23 mtr (กว้างxยาวxสูง) ท่อไฟใหญ่ ขนาด ∅ - ยาว - หนา - จำนวน - ท่อ

ท่อไฟเล็กขนาด ∅ - ยาว - จำนวน - ท่อ

ท่อน้ำ (สำหรับหม้อไอน้ำแบบท่อน้ำ) HP ขนาด ∅ 38.1 mm. ยาว 15,881 mm. จำนวน ท่อ

ท่อน้ำ (สำหรับหม้อไอน้ำแบบท่อน้ำ) LP ขนาด ∅ 38.1 mm. ยาว 15,881 mm. จำนวน ท่อ

ผนังตายตัว หนา ผนังด้านหน้า-หลัง (End Plates) หนา

ถังพักไอน้ำ (Header or Steam Dome) ขนาด ∅ HP. Drum : OD 1,7966 mm หนา 60.3 mm และ LP Drum : OD 1,396.4 mm หนา 12.7 mm.

ช่องคนลง (Manhole) ☐ ไม่มี ■ มี จำนวน 4 ช่อง, ช่องมือถือ (Handhole) ☐ ไม่มี ☐ มี จำนวน - ช่อง

- ช่องทำความสะอาดท่อน้ำ (สำหรับหม้อน้ำตั้งแบบท่อน้ำขวาง) ■ ไม่มี ☐ มี จำนวน - ช่อง

เหล็กยึดโยงเป็นแบบ ☐ Stay Rod ขนาด ∅ - จำนวน - ชุด

☐ Stay Tube ขนาด ∅ - จำนวน - ชุด

☐ Gusset Stay หนา - ด้านหน้า - ชุด ด้านหลัง - ชุด

☐ อื่น ๆ - จำนวน ชุด

1. สภาพอุปกรณ์ของหม้อไอน้ำ

2.1 ลิ้นนิรภัย (Safety Valve) มีจำนวน 5 ชุด เป็นแบบ

☐ แบบน้ำหนักถ่วง ขนาด ∅ - ระบายไอน้ำที่ความดัน -

■ แบบสปริงมีคานดัด ขนาด ∅ HP:2 1/2", 2", LP:1 1/2" (3EA) ระบายไอน้ำที่ความดัน HP:89.6 barg , 85.2 barg

LP:12.8 barg,12 barg ,11 barg

☐ แบบ - ขนาด ∅ - ระบายไอน้ำที่ความดัน -

2.2 ระบบความดัน

ความดันใช้งานปกติ (Working Pressure) HP: 78.7 barg LP:8.3 barg

เกจวัดความดัน (Pressure Gauge) จำนวน HP 1 ชุด LP 1 ชุด สเกลสูงสุดอ่านได้ที่ HP:160 barg LP:25 barg

สวิตช์ควบคุมความดัน (Pressure Control Switch) ☐ ไม่มี ■ มี จำนวน 2 ชุด

ตั้งไว้ที่ความดัน ควบคุมความดันอัตโนมัติ DCS Diff. Pressure -

2.3 ระบบน้ำ

หลอดแก้วและวาล์วปิดกั้น มีจำนวน HP 1 ชุด และ LP 1 ชุด พร้อมท่อระบายจากวาล์วหลอดแก้วถึงระดับพื้น

เครื่องควบคุมระดับน้ำ (Water Level Control) ☐ ไม่มี ■ มี เป็นแบบ ☐ ลูกลอย (Float Type) ☐ Electrode ■ Level transmitter

■ อื่น ๆ (ระบุ) Electro Eye - Hyg. System จำนวน HP Drum 1 ชุด, LP Drum 1 ชุด

เครื่องสูบน้ำเข้าหม้อไอน้ำ เป็นแบบ ☐ Reciprocation ☐ Turbine ■ อื่น ๆ Centrifugal จำนวน HP 3 ชุด, LP 3 ชุด

โดยใช้พลังงานจาก ■ ไฟฟ้า ☐ ไอน้ำ ☐ อื่น Motor Drive

วาล์วกันกลับ (Check Valve) ที่ท่อน้ำ เข้าหม้อไอน้ำ ขนาด ∅ HP : 6 Inch 1 ชุด, LP: 3 Inch 1 ชุด ชุด

น้ำที่เข้าหม้อไอน้ำ ☐ น้ำประปา ☐ น้ำบาดาล ☐ น้ำบ่อ ☐ น้ำคลอง ■ อื่น ๆ (ระบุ) DEMINERIZED WATER

กรรมวิธีการปรับสภาพน้ำ ☐ ไม่มี ■ มี เป็นแบบ ☐ Softener (Resin) ☐ เติมสารเคมี ■ อื่น ๆ RO & CEDI

คุณสมบัติของน้ำเข้าหม้อไอน้ำ pH = 8.9-10.6 Hardness = - อื่น ๆ (ถ้ามี) -

วาล์วถ่ายน้ำ (Blow Down Valve) ขนาด ∅ 1 นิ้ว, 2 นิ้ว และ 4 นิ้ว จำนวน HP 9 ชุด, LP 5 ชุด

2.4 ระบบการจ่ายไอน้ำ

วาล์วจ่ายไอน้ำ (Main Stream Valve) ขนาด ∅ HP : 8 นิ้ว, LP: 8 นิ้ว จำนวน HP 1 ชุด, LP 1 ชุด

วาล์วกันกลับที่ท่อจ่ายไอ (Check Valve) ขนาด ∅ HP : 8 นิ้ว, LP: 8 นิ้ว จำนวน HP 1 ชุด, LP 1 ชุด

ท่อจ่ายไอน้ำ (Stream Pipe) ขนาด ∅ HP : 8 นิ้ว, LP: 8 นิ้ว, ฉนวนหุ้มท่อจ่ายไอน้ำ ☐ ไม่มี ■ มี เป็นแบบ Rock Wool

2.5 ระบบสัญญาณเตือนภัย ☐ ไม่มี ■ มีเป็นแบบ ☐ กระดิ่งไฟฟ้า ■ ไซรน ☐ อื่น ๆ(ระบุ).....

2.6 ระบบการเผาไหม้

เชื้อเพลิงที่ใช้ ☐ ฟืน ☐ แกลบ ☐ ชีเลื่อย ☐ น้ำมันดีเซล ☐ น้ำมันเตาเกรด.....

■ อื่น ๆ Flue Gas จาก Gas Turbine ..... ปริมาณการใช้ 431.6 Ton/hr (ต่อหน่วยเวลา)

■ มีระบบควบคุมการจ่ายเชื้อเพลิง เป็นแบบ Gas Turbine ขนาดความสามารถ .....

การจัดทิศทางเปลวไฟ ■ 1 Pass ☐ 2 Pass ☐ 3 Pass ☐ 4 Pass ปล่องไฟขนาด ∅ 2.896 mtr. สูง 45 mtr.

ลมช่วยในการเผาไหม้ ☐ ธรรมชาติ ☐ พัดลมขนาด .....

สายล่อฟ้า ☐ ไม่จำเป็นต้องมี ■ จำเป็นต้องมี (■ มีเหมาะสม ☐ ยังไม่มี)

ปลั๊กหลอมละลาย (Fusible Plug) ■ ไม่มี ☐ มี จำนวน ..... ชุด

2.7 ระบบปรับปรุงประสิทธิภาพ

เครื่องอุ่นน้ำมัน (Oil Heater) ■ ไม่มี ☐ มี เป็นแบบ ..... อุ่นถึงอุณหภูมิ .....

เครื่องอุ่นอากาศ (Air Heater) ■ ไม่มี ☐ มี เป็นแบบ ..... อุ่นถึงอุณหภูมิ .....

เครื่องอุ่นน้ำ (Economizer) ☐ ไม่มี ■ มี เป็นแบบ Saturated Fin Tube อุ่นถึงอุณหภูมิ 166.2 °C

การนำคอนเดนเสตกลับมาใช้ ☐ ไม่มี ■ มี ปริมาณ 78 Ton/hr

2.8 ภาชนะรับแรงดันไอน้ำ (Pressure Vessel) ☐ ไม่มี ■ มี (ระบุ)

กังหันไอน้ำ ขนาด ∅ ไอดี (High Pressure) Main steam pipe OD. 8 inch to steam turbine จำนวน ..... ชุด

เครื่อง ..... จำนวน ..... ชุด ใช้ความดัน ..... ☐ มีลิ้นนิรภัยตั้งความดันที่ .....

เครื่อง ..... จำนวน ..... ชุด ใช้ความดัน ..... ☐ มีลิ้นนิรภัยตั้งความดันที่ .....

รายงานผลการตรวจหม้อน้ำก่อนรับรอง

ท่อไฟใหญ่	☐ เรียบร้อย	☐ บกพร่อง	ท่อไฟเล็ก	☐ เรียบร้อย	☐ บกพร่อง
ผนังด้านหน้า-หลัง	☐ เรียบร้อย	☐ บกพร่อง	ผนังข้าง	■ เรียบร้อย	☐ บกพร่อง
ตะเข็บยึดโยง	■ เรียบร้อย	☐ บกพร่อง	ช่องมือออด	☐ เรียบร้อย	☐ บกพร่อง
ช่องคนลง	■ เรียบร้อย	☐ บกพร่อง	ท่อน้ำ	■ เรียบร้อย	☐ บกพร่อง
เกจวัดความดัน	■ เรียบร้อย	☐ บกพร่อง	ลิ้นนิรภัย	■ เรียบร้อย	☐ บกพร่อง
เครื่องสูบน้ำป้อนหม้อไอน้ำ	■ เรียบร้อย	☐ บกพร่อง	สวิตช์ควบคุมความดัน	■ เรียบร้อย	☐ บกพร่อง
ระบบสัญญาณเตือนภัย	■ เรียบร้อย	☐ บกพร่อง	เครื่องควบคุมระดับน้ำ	■ เรียบร้อย	☐ บกพร่อง
สภาพตะกรันภายในหม้อไอน้ำ	■ ไม่มี	☐ มี	☐ มาก	☐ ปานกลาง	☐ น้อย

รายละเอียดของส่วนที่บกพร่องและอื่น ๆ

.....

.....

ข้าพเจ้าได้ให้ผู้รับใบอนุญาตประกอบกิจการโรงงานดำเนินการซ่อมแซมแก้ไขจนเป็นที่เรียบร้อยสมบูรณ์แล้ว ก่อนลงลายมือชื่อรับรอง

.....(วิศวกร ผู้ตรวจทดสอบ)

(.....นายอิสรา.....ชูนภักดี.....)

ข้อกำหนดในการตรวจทดสอบฯ และกรอกรายงานในเอกสารรับรองความปลอดภัยในการใช้หม้อไอน้ำ

ชื่อโรงงาน :-	ใช้ตามที่ระบุไว้ในใบอนุญาตประกอบกิจการโรงงาน ถ้าไม่มีให้ใช้ชื่อผู้รับใบอนุญาตฯ
ประกอบกิจการโรงงาน :-	ใช้ตามที่ระบุในบรรทัดที่ 7 ของหน้าที่ 1 ในใบอนุญาตประกอบกิจการโรงงาน, รง. 4 (นับจากวันที่ออก)
ทะเบียนโรงงานเลขที่ :-	ใช้ตามที่ระบุในกรอบเส้นเหลี่ยมมุมบนด้านขวาของใบอนุญาตประกอบกิจการโรงงาน, รง. 4
หม้อไอน้ำหมายเลข :-	หม้อไอน้ำที่ติดตั้งก่อนถือว่าเป็นหมายเลข 1
ออกแบบความดันสูงสุด :-	ความดันสูงสุดที่ผู้สร้างกำหนดให้ใช้ (Max Allowable Working Pressure)
สวิตช์ควบคุมความดัน :-	(ถ้ามี) จะต้องตั้งไว้ไม่เกินความดันใช้งานสูงสุด (Max Working Pressure)
ลิ้นนิรภัย :-	- ต้องติดตั้งที่เปลือกหรือถังพักไอ และต้องไม่มีวาล์วต่อคั่นกลาง - ต้องเป็นแบบน้ำหนักถ่วงหรือสปริงที่มีคานงัด ไม่มีคานงัดห้ามใช้ หรือแบบอื่นที่สามารถตรวจสอบการปิดได้ง่าย มีขนาดที่สามารถระบายไอได้ทันเมื่อความดันเกินกำหนดและปรับตั้งให้ระบายที่ความดันไม่เกิน 10% ของความดันใช้งานสูงสุด (Max Working Pressure) แต่ต้องไม่เกิน 3% ของการออกแบบความดันสูงสุด (Max Allowable Working Pressure) - ต้องมีไม่น้อยกว่า 2 ชุด สำหรับหม้อไอน้ำที่มีพื้นที่ผิวรับความร้อนตั้งแต่ 50 ตารางเมตรขึ้นไป
ตะกรัน :-	ถ้ามีหนากว่า 1/16 นิ้วจะต้องล้างออก
การตรวจทดสอบ :-	ให้ใช้หลักวิชาการทางด้านวิศวกรรม หรือมาตรฐานสากลอันเป็นที่ยอมรับที่กรมโรงงานอุตสาหกรรมเห็นชอบ
การอัดน้ำทดสอบ :-	ต้องใช้ความดัน 1.5 เท่าของความดันสูงสุดที่ออกแบบ (Max Allowable Working Pressure) ถ้าความดันใช้งานสูงสุดต่ำกว่า 60 ปอนด์ต่อตารางนิ้ว ต้องใช้ความดันไม่น้อยกว่า 2 เท่าของความดันใช้งานสูงสุด ถ้าความดันใช้งานสูงสุดอยู่ในระหว่าง 60-80 ปอนด์ต่อตารางนิ้ว ต้องใช้ความดันไม่น้อยกว่า 120 ปอนด์ต่อตารางนิ้ว

หมายเหตุ

1. ในการตรวจทดสอบหากพบว่า ส่วนประกอบและหรืออุปกรณ์ของหม้อไอน้ำส่วนหนึ่งส่วนใดมีข้อบกพร่องชำรุด หรือไม่ทำงาน วิศวกรผู้ตรวจทดสอบ ต้องแจ้งให้ผู้รับใบอนุญาตประกอบกิจการโรงงาน ดำเนินการซ่อมปรับปรุงแก้ไข หรือเปลี่ยนใหม่ให้อยู่ในสภาพเรียบร้อย ให้แล้วเสร็จสมบูรณ์ก่อนลงลายมือชื่อรับรอง
2. ต้องกรอกข้อความให้ครบทุกข้อ ข้อความใดที่ไม่ได้กรอกต้องแสดงเหตุผล มิฉะนั้น ถือหน้าที่จะถือว่าไม่ได้ตรวจทดสอบหรือดูสภาพส่วนประกอบหรืออุปกรณ์ของหม้อไอน้ำนั้น และอาจพิจารณาไม่รับเอกสารฯ ฉบับนี้
3. ข้อความนอกเหนือจากที่ระบุในข้อกำหนด ให้ใช้หลักวิชาการทางวิศวกรรม

คำรับรองของผู้ประกอบกิจการโรงงาน

1. ข้าพเจ้าขอรับรองว่าในการตรวจทดสอบความปลอดภัยในการใช้หม้อไอน้ำครั้งนี้ วิศวกรผู้ตรวจทดสอบได้ดำเนินการตรวจทดสอบหม้อไอน้ำตามที่กรมโรงงานอุตสาหกรรม กำหนดจริง หากกรมโรงงานอุตสาหกรรมตรวจพบในภายหลังว่า มิได้มีการตรวจทดสอบหม้อไอน้ำตามที่กรมโรงงานอุตสาหกรรมกำหนด ข้าพเจ้ายินดีให้กรมโรงงานอุตสาหกรรม เพิกถอนใบอนุญาตประกอบกิจการโรงงานโดยไม่มีเงื่อนไข
2. เมื่อครบกำหนดที่จะต้องตรวจทดสอบหม้อไอน้ำครั้งต่อไป ข้าพเจ้าจะต้องแจ้งเป็นหนังสือให้กรมโรงงานอุตสาหกรรม ในกรณีโรงงานตั้งอยู่ในเขตกรุงเทพมหานคร หรือ สำนักงานอุตสาหกรรมจังหวัด ในกรณีโรงงานอุตสาหกรรมตั้งอยู่นอกเขตกรุงเทพมหานคร ทราบล่วงหน้าไม่น้อยกว่า 7 วัน เพื่อที่กรมโรงงานอุตสาหกรรม หรือ สำนักงานอุตสาหกรรมจังหวัด จะได้ส่งเจ้าหน้าที่ไปสังเกตการณ์ในการตรวจทดสอบหม้อไอน้ำ

ข้าพเจ้าได้อ่านและเข้าใจในข้อความดังกล่าวข้างต้นแล้ว จึงลงลายมือชื่อไว้เป็นสำคัญ

ลงชื่อ.....ผู้รับใบอนุญาตประกอบกิจการโรงงาน

(บริษัท อมตะ บี.กริม เพาเวอร์ (ระยอง) 5 จำกัด)

สำนักเทคโนโลยีความปลอดภัย
กรมโรงงานอุตสาหกรรม

รายงานผลการตรวจทดสอบความปลอดภัยในการใช้หม้อไอน้ำ

การตรวจสอบ (Inspection)

บริษัท อมตะ บีเอริน เพเนวอร์ (ระยอง) 5 จำกัด หม้อน้ำพลังงาน 1 (HRSG51)

หมายเลขเครื่อง 17491 – 1A | **Name Plate : HP17491-1A, HPEC 17491-1B, LP 17491-1C, LPEC 17491-1D**

1. ประวัติการชำรุดและการซ่อมแซมโครงสร้าง อุปกรณ์ และการล้างตะกรันในรอบ 1 ปีที่ผ่านมา ดังนี้
   1. ลักษณะการชำรุด.....-.....ซ่อมโดย.....-.....เมื่อ.....-.....
   2. ลักษณะการชำรุด.....-.....ซ่อมโดย.....-.....เมื่อ.....-.....
   3. ลักษณะการชำรุด.....-.....ซ่อมโดย.....-.....เมื่อ.....-.....
   4. วิศวกรควบคุมและดำเนินการซ่อม ชื่อ.....-.....ทะเบียนเลขที่.....-.....

2. การตรวจสอบสภาพภายนอก (External Inspection)

   การติดตั้งหม้อไอน้ำ.....ปกติ.....การติดตั้งระบบท่อ.....ปกติ.....

   สภาพภายนอกหม้อไอน้ำ (โครงสร้าง).....ปกติ.....

   การติดตั้งอุปกรณ์ทั่วไป หรือ อุปกรณ์ความปลอดภัย ตามกฎหมายกำหนด ☑ ถูกต้อง ☐ ไม่ถูกต้อง (ระบุ)

   .....

3. การตรวจสอบสภาพภายใน (Internal Inspection)

   3.1. สภาพผิวด้านสัมผัสไฟ

   สภาพท่อไฟใหญ่ ท่อไฟเล็ก ท่อน้ำ ผนังตา ผนังหน้า-หลัง Smoke Chamber ปูนทนไฟ อิฐทนไฟ ฉนวนกันความร้อน (ลักษณะการชำรุด เสียรูป แตกร้าว รั่วซึม กัดกร่อน ขี้เถ้า เขม่า หรือ ความผิดปกติต่างๆ).....

   .....สภาพปกติ พร้อมใช้งาน.....

   .....

   3.2. สภาพผิวด้านสัมผัสน้ำ

   สภาพท่อไฟใหญ่ ท่อไฟเล็ก ท่อน้ำ ผนังตา ผนังหน้า-หลัง Upper Drum Lower Drum(ลักษณะการชำรุด เสียรูป แตกร้าว รั่วซึม กัดกร่อน ตะกรัน โคลนตะกอน การชุดตันของอุปกรณ์ความปลอดภัยต่างๆ).....

   .....-.....

   .....

4. การทดสอบความแข็งแรงของโครงสร้างโดยการอัดน้ำ (Hydrostatic Test)

   กรณี ☐ สร้างใหม่ ☑ ประจำปี ☐ ดัดแปลง ☐ ซ่อมแซม ☐ เปลี่ยนโครงสร้าง ☐ อื่นๆ.....

   ทดสอบที่ความดัน LP = 13.64 Bar(g) HP = 98.56 Bar(g) ผลการทดสอบ ☑ ปกติ ☐ ควรปรับปรุง

   หากควรปรับปรุง สาเหตุ.....-.....วิธีการปรับปรุง.....

   การทำงานของอิ้นนิรภัย (Safety Valve) ผลการทดสอบ ☑ ปกติ ☐ ควรปรับปรุง

   หากควรปรับปรุง สาเหตุ.....-.....วิธีการปรับปรุง.....

5. การตรวจสอบสภาพการทำงานของระบบหรืออุปกรณ์ความปลอดภัย (Functional Test)

   -การทำงานของเกจวัดความดัน ☑ ปกติ ☐ ควรปรับปรุง.....

   -การทำงานของเครื่องสูบน้ำ (Feed Water Pump) ☑ ปกติ ควรปรับปรุง.....

   -การทำงานของเครื่องควบคุมระดับน้ำ ☑ ปกติ ☐ ควรปรับปรุง.....

   -การทำงานของระบบสัญญาณเตือนภัย ☑ ปกติ ☐ ควรปรับปรุง.....

   -การทำงานของเครื่องควบคุมความดัน (Pressure Control Switch) ☑ ปกติ ☐ ควรปรับปรุง.....

   -ผลของแก้วบอกระดับน้ำ ☑ ปกติ ☐ ควรปรับปรุง.....

   -การทำงานของอิ้นกันกลับ (Check Valve) ☑ ปกติ ☐ ควรปรับปรุง.....

6. การตรวจสอบสภาพการทำงานของระบบหรืออุปกรณ์ทั่วไป (General Equipment)

-การทำงานของเกจวัดอุณหภูมิปล่อง ☑ ปกติ ☐ ควรปรับปรุง.....

-ภาชนะเก็บน้ำป้อนเข้าหม้อไอน้ำ หรือ ถังคอนเดนเสต รวมถึงระบบท่อ ☑ ปกติ ☐ ควรปรับปรุง.....

-เครื่องปรับปรุงคุณภาพน้ำก่อนป้อนเข้าหม้อไอน้ำ ☑ ปกติ ☐ ควรปรับปรุง.....

-ระบบป้องกันอันตรายจากฟ้าผ่า ☑ ปกติ ☐ ควรปรับปรุง.....

-ฉนวนทั้งหมด (ตัวหม้อไอน้ำระบบท่ออุปกรณ์การใช้ไอน้ำฯลฯ) ☑ ปกติ ☐ ควรปรับปรุง.....

-วาล์วถ่ายน้ำ (Blow Down Valve) ☑ ปกติ ☐ ควรปรับปรุง.....

-ลิ้นหรือวาล์วที่ติดทั้งกับหม้อไอน้ำ ☑ ปกติ ☐ ควรปรับปรุง.....

7. รายละเอียดของส่วนที่บกพร่องเพิ่มเติม และข้อเสนอแนะในการปรับปรุงแก้ไข

1. .....
2. .....
3. .....
4. .....
5. .....

8. สรุปผลการตรวจสอบ

☑ 8.1 ขอรับรองว่าหม้อไอน้ำเครื่องนี้สามารถใช้งานได้โดยปลอดภัยภายใต้ความดันใช้งานไม่เกิน LP 12.4 Bar. (g) , HP 89.6 Bar. (g) เป็นเวลา 1 ปี นับตั้งแต่วันที่ตรวจสอบ

☐ 8.2 ขอรับรองว่าหม้อไอน้ำเครื่องนี้ตามข้อ 8.1 และผู้ประกอบกิจการโรงงานได้แก้ไขตามรายละเอียด ดังนี้แล้ว

8.2.1 .....-.....

8.2.2 .....-.....

อื่นๆ .....-.....

ข้าพเจ้าขอรับรองว่าข้อมูลข้างต้นเป็นความจริงทุกประการจึงได้ลงลายมือชื่อรับรองไว้เป็นหลักฐาน

.....วิศวกรผู้ตรวจทดสอบ

(นายอิสรา พูนภักดี)

หมายเหตุ

1. เอกสารนี้ถือว่าเป็นส่วนหนึ่งของเอกสารรับรองความปลอดภัยในการใช้หม้อไอน้ำหรือหม้อต้มฯ ทั้งระเบียบกรมโรงงานอุตสาหกรรมว่าด้วยการขึ้นทะเบียนเป็นวิศวกรควบคุมและอำนวยการใช้หม้อไอน้ำ วิศวกรตรวจทดสอบหม้อไอน้ำหรือหม้อต้มที่ใช้ของเหลวเป็นสื่อนำความร้อน วิศวกรควบคุมการสร้างหรือซ่อมหม้อไอน้ำหรือหม้อต้มที่ใช้ของเหลวเป็นสื่อนำความร้อนและผู้ควบคุม ประจำหม้อไอน้ำหรือหม้อต้มที่ใช้ของเหลวเป็นสื่อนำความร้อน พ.ศ.2526
2. ในการตรวจทดสอบหากพบว่า ส่วนประกอบและหรืออุปกรณ์ของหม้อไอน้ำหรือหม้อต้มฯ ส่วนหนึ่งส่วนใดหรือทั้งหมดมีข้อบกพร่องไม่ สมบูรณ์เชิงวิศวกรรม วิศวกรผู้ตรวจทดสอบต้องบันทึกข้อบกพร่องพร้อมคำแนะนำวิธีการแก้ไขในเอกสารรายงานฉบับนี้และแจ้งให้ผู้ประกอบ กิจการโรงงาน ดำเนินการซ่อมปรับปรุงแก้ไข หรือเปลี่ยนใหม่อยู่ในสภาพเรียบร้อยให้แล้วเสร็จสมบูรณ์
3. ต้องกรอกข้อความให้ครบทุกข้อ ข้อความใดที่ไม่ได้กรอก ต้องแสดงเหตุผล มิฉะนั้น เจ้าหน้าที่จะถือว่าไม่ได้ตรวจทดสอบหรือตรวจสภาพ ส่วนประกอบหรืออุปกรณ์ของหม้อไอน้ำหรือหม้อต้มฯนั้น และอาจพิจารณาไม่รับเอกสารฯ ฉบับนี้
4. ข้อความนอกเหนือจากที่ระบุในข้อกำหนด ให้ใช้หลักวิชาการทางวิศวกรรม
5. ต้องแนบภาพถ่ายซึ่งแสดงได้ว่าการตรวจทดสอบได้กระทำโดยวิศวกรผู้ตรวจทดสอบ ทั้งนี้รายละเอียดของภาพถ่ายให้เป็นไปตามที่เจ้าหน้าที่

ที่ อก ๐๓๑๒ / ๑๖๒๕๒

กรมโรงงานอุตสาหกรรม
ถนนพระรามที่ ๖ แขวงทุ่งพญาไท
เขตราชเทวี กรุงเทพฯ ๑๐๔๐๐

๐๓ พฤศจิกายน ๒๕๖๕

เรื่อง อนุญาตให้ต่ออายุทะเบียนเป็นวิศวกรตรวจทดสอบหม้อน้ำหรือหม้อต้มที่ใช้ของเหลวเป็นสื่อนำความร้อน

เรียน นายอิสรา พูนภักดี

ตามที่ท่าน นายอิสรา พูนภักดี ผู้ได้รับใบอนุญาตประกอบวิชาชีพวิศวกรรมควบคุม สาขาวิศวกรรมเครื่องกล ตามพระราชบัญญัติวิศวกร พ.ศ.๒๕๔๒ ประเภท สามัญวิศวกร เลขทะเบียน สก.๓๗๔๘ ได้ขอต่ออายุทะเบียนเป็นวิศวกรตรวจทดสอบหม้อน้ำหรือหม้อต้มที่ใช้ของเหลวเป็นสื่อนำความร้อนไว้ต่อกรมโรงงานอุตสาหกรรม นั้น

กรมโรงงานอุตสาหกรรมพิจารณาแล้วอนุญาตให้ นายอิสรา พูนภักดี ต่ออายุทะเบียนเป็นวิศวกรตรวจทดสอบหม้อน้ำหรือหม้อต้มที่ใช้ของเหลวเป็นสื่อนำความร้อน ตามทะเบียนเลขที่ ๖-๖๕-๑๑๗๕ จนถึงวันที่ ๓๑ ธันวาคม ๒๕๖๙ ทั้งนี้ ใบอนุญาตประกอบวิชาชีพวิศวกรรมควบคุมต้องยังไม่หมดอายุ หรือมีการต่ออายุเป็นที่เรียบร้อยแล้ว

อนึ่ง กรมโรงงานอุตสาหกรรมได้จัดทำ "ระบบจัดการหม้อน้ำหรือหม้อต้มที่ใช้ของเหลวเป็นสื่อนำความร้อน" เพื่อให้วิศวกรตรวจทดสอบรายงานความปลอดภัยผ่านระบบดังกล่าว โดยท่านจะสามารถใช้งานระบบได้ก็ต่อเมื่อท่านยืนยันตัวตนและได้รับรหัสผ่าน (password) รายละเอียดตามสิ่งที่ส่งมาด้วย

จึงเรียนมาเพื่อโปรดทราบ และขอให้ท่านปฏิบัติงานตามหน้าที่ความรับผิดชอบและจรรยาบรรณแห่งวิชาชีพวิศวกรรมโดยเคร่งครัด

ขอแสดงความนับถือ

(นายบวร สัตยาวุฒิพงศ์)
ผู้อำนวยการกองส่งเสริมเทคโนโลยีความปลอดภัยโรงงาน
ปฏิบัติราชการแทน อธิบดีกรมโรงงานอุตสาหกรรม

(นายอิสรา พูนภักดี)
วิศวกรผู้รับรอง
เลขทะเบียน สก.3748

กองส่งเสริมเทคโนโลยีความปลอดภัยโรงงาน
โทร. ๐ ๒๔๓๐ ๖๓๑๔ ต่อ ๒๓๑๒, ๒๓๑๓
โทรสาร ๐ ๒๔๓๐ ๖๓๑๔ ต่อ ๒๓๔๔
ไปรษณีย์อิเล็กทรอนิกส์ saraban@diw.mail.go.th

สิ่งที่ส่งมาด้วย

(https://www.diw.go.th/egis_engineer/)

สภาวิศวกร

ตามพระราชบัญญัติวิศวกร พ.ศ. ๒๕๔๒

ออกบัตรนี้ไว้เพื่อแสดงว่า

นายอิสรา พูนภักดี

มีสิทธิประกอบวิชาชีพวิศวกรรมควบคุม

ระดับ สามัญวิศวกร สาขา วิศวกรรมเครื่องกล

ตามใบอนุญาตเลขทะเบียน สก.๓๗๔๘

ตั้งแต่วันที่ ๒๖ กรกฎาคม ๒๕๕๕

เลขบัตร ๒๑๔๓๔๕

สำนำถูกต้อง

(นายอิสรา พูนภักดี)

วิศวกรผู้รับรอง

เลขทะเบียน สก.3748

นิตยา จันทร์เรือง มหาผล

(นางนิตยา จันทร์เรือง มหาผล)

เลขาธิการสภาวิศวกร

(นายเรืองศักดิ์ วัชรพงศ์)

นายกสภาวิศวกร

สภาวิศวกร

ตามพระราชบัญญัติวิศวกร พ.ศ. ๒๕๕๒
ออกใบอนุญาตนี้ให้ไว้เพื่อแสดงว่า

บริษัท ไออาร์พี เอ็นจิเนียริ่ง จำกัด

ได้รับอนุญาตประกอบวิชาชีพวิศวกรรมควบคุม

เลขทะเบียน ๑๔๔๔/๖๑

ตั้งแต่วันที่ ๑๗ พฤศจิกายน ๒๕๖๗ ถึงวันที่ ๑๖ พฤศจิกายน ๒๕๗๐

(นายอิสรา พูนภักดี)
วิศวกรผู้รับรอง

เลขทะเบียน สก.3748

(นายธเนศ วีระศิริ)
นายกสภาวิศวกร

สแกน Q.R. Code เพื่อตรวจสอบเอกสาร

วันที่พิมพ์เอกสาร ๑ พ.ย. ๒๕๖๗ ๑๙.๕๒ น.

ที่ รง ๐๕๐๔/[illegible]

กรมสวัสดิการและคุ้มครองแรงงาน
ถนนมิตรไมตรี ดินแดง กรุงเทพฯ ๑๐๔๐๐

๒๐ กุมภาพันธ์ ๒๕๖๖

เรื่อง การขออนุญาตเป็นผู้ให้บริการทดสอบเครื่องจักร ปั้นจั่น และหม้อน้ำ

เรียน กรรมการผู้จัดการบริษัท ไออาร์พี เอ็นจิเนียริ่ง จำกัด

อ้างถึง แบบคำขอและรับคำขอใบอนุญาตฯ ของบริษัท ไออาร์พี เอ็นจิเนียริ่ง จำกัด

สิ่งที่ส่งมาด้วย ใบอนุญาตเป็นผู้ให้บริการทดสอบเครื่องจักร ปั้นจั่น และหม้อน้ำ และรายชื่อบุคลากรแนบท้าย ลงวันที่ ๒๐ กุมภาพันธ์ พ.ศ. ๒๕๖๖ จำนวน ๓ ฉบับ

ตามหนังสือที่อ้างถึง บริษัท ไออาร์พี เอ็นจิเนียริ่ง จำกัด ได้ยื่นแบบคำขอและรับคำขอใบอนุญาต พร้อมเอกสารหลักฐานประกอบการขอเป็นผู้ให้บริการทดสอบเครื่องจักร ปั้นจั่น และหม้อน้ำ ตามกฎกระทรวงการขึ้นทะเบียนและการอนุญาตให้บริการเพื่อส่งเสริมความปลอดภัย อาชีวอนามัย และสภาพแวดล้อมในการทำงาน พ.ศ. ๒๕๖๔ เพื่อให้กรมสวัสดิการและคุ้มครองแรงงานพิจารณา ความละเอียดแจ้งแล้ว นั้น

กรมสวัสดิการและคุ้มครองแรงงาน ได้พิจารณาแล้วเห็นว่าการยื่นแบบคำขอและรับคำขอใบอนุญาตเป็นผู้ให้บริการทดสอบเครื่องจักร ปั้นจั่น และหม้อน้ำ ของบริษัท ไออาร์พี เอ็นจิเนียริ่ง จำกัด เป็นไปตามกฎกระทรวงกำหนดมาตรฐานในการบริหาร จัดการ และดำเนินการด้านความปลอดภัย อาชีวอนามัย และสภาพแวดล้อมในการทำงานเกี่ยวกับเครื่องจักร ปั้นจั่น และหม้อน้ำ พ.ศ. ๒๕๖๔ และกฎกระทรวงการขึ้นทะเบียนและการอนุญาตให้บริการเพื่อส่งเสริมความปลอดภัยฯ จึงออกใบอนุญาตให้บริษัท ไออาร์พี เอ็นจิเนียริ่ง จำกัด เป็นผู้ให้บริการทดสอบเครื่องจักร ปั้นจั่น และหม้อน้ำ พร้อมบุคลากร จำนวน ๑ ราย โดยมีใบอนุญาตเป็นผู้ให้บริการทดสอบเครื่องจักร ใบอนุญาตเลขที่ ๐๖๐๑-๐๓-๒๕๖๖-๐๑๑๐ เป็นผู้ให้บริการทดสอบปั้นจั่น ใบอนุญาตเลขที่ ๐๖๐๒-๐๓-๒๕๖๖-๐๑๑๒ และเป็นผู้ให้บริการทดสอบหม้อน้ำ ใบอนุญาตเลขที่ ๐๖๐๓-๐๓-๒๕๖๖-๐๑๒๘ รายละเอียดปรากฏตามสิ่งที่ส่งมาด้วย และขอให้บริษัทฯ ปฏิบัติตามกฎกระทรวง การขึ้นทะเบียนและการอนุญาตให้บริการเพื่อส่งเสริมความปลอดภัยฯ อย่างเคร่งครัด ทั้งนี้ กรณีใบอนุญาตประกอบวิชาชีพวิศวกรรมควบคุมของบริษัทฯ หมดอายุ ให้ดำเนินการต่ออายุใบอนุญาตประกอบวิชาชีพวิศวกรรมควบคุม และจัดส่งฉบับสำเนาให้กองความปลอดภัยแรงงาน เพื่อให้สถานภาพการเป็นผู้ให้บริการทดสอบเครื่องจักร ปั้นจั่น และหม้อน้ำ เป็นไปตามที่กฎหมายกำหนด

จึงเรียนมาเพื่อทราบ

ขอแสดงความนับถือ

(นายอิสรา พูนภักดี)
วิศวกรผู้รับรอง
เลขทะเบียน สก.3748

(นายสมพจน์ กวางแก้ว)
รองอธิบดี ปฏิบัติราชการแทน
อธิบดีกรมสวัสดิการและคุ้มครองแรงงาน

กองความปลอดภัยแรงงาน
โทรศัพท์ ๐ ๒๔๔๘ ๙๑๒๘ - ๓๙ ต่อ ๗๐๖
โทรสาร ๐ ๒๔๔๘ ๗๑๔๓

แบบ กภ.บญ
นิติบุคคล

กรมสวัสดิการและคุ้มครองแรงงาน
ใบอนุญาต
เป็นนิติบุคคลผู้ให้บริการทดสอบหม้อน้ำ

ใบอนุญาตเลขที่ ๑๖๐๓-๐๓-๒๕๖๖-๐๑๒๘

อนุญาตให้ บริษัท ไดอาร์ที เอ็นจิเนียริ่ง จำกัด

เลขทะเบียนนิติบุคคล ๐๑๒๐๕๕๕๗๐๐๔๓๓๖

ตั้งอยู่ เลขที่ ๕๒/๘ หมู่ที่ ๒ ตำบลบ้านสวน อำเภอเมืองชลบุรี จังหวัดชลบุรี

เป็นนิติบุคคลผู้ให้บริการด้านความปลอดภัย อาชีวอนามัย และสภาพแวดล้อมในการทำงาน ตามกฎกระทรวงกำหนดมาตรฐานในการบริหาร จัดการ และดำเนินการด้านความปลอดภัย อาชีวอนามัย และสภาพแวดล้อมในการทำงานเกี่ยวกับเครื่องจักร ปั้นจั่น และหม้อน้ำ พ.ศ. ๒๕๖๔ เรื่อง การทดสอบหม้อน้ำ หม้อต้มที่ใช้ของเหลวเป็นสื่อนำความร้อน และภาชนะรับความดัน ทั้งนี้ สามารถดำเนินการได้เฉพาะงานตามประเภทและขนาดตามกฎหมายว่าด้วยวิศวกร ประกอบกับกฎกระทรวงการขึ้นทะเบียน และการอนุญาตให้บริการเพื่อส่งเสริมความปลอดภัย อาชีวอนามัย และสภาพแวดล้อมในการทำงาน พ.ศ. ๒๕๖๔ แห่งพระราชบัญญัติความปลอดภัย อาชีวอนามัย และสภาพแวดล้อมในการทำงาน พ.ศ. ๒๕๕๔ โดยมีบุคลากร จำนวน ๑ ราย ดังรายชื่อแนบท้ายใบอนุญาตนี้

ทั้งนี้ ตั้งแต่วันที่ ๒๐ กุมภาพันธ์ พ.ศ. ๒๕๖๖ ถึงวันที่ ๑๙ กุมภาพันธ์ พ.ศ. ๒๕๖๙

ให้ไว้ ณ วันที่ ๒๐ กุมภาพันธ์ พ.ศ. ๒๕๖๖

(นายสมพจน์ กวางแก้ว)
รองอธิบดี ปฏิบัติราชการแทน
อธิบดีกรมสวัสดิการและคุ้มครองแรงงาน

(นายอิสรา พูนภักดี)
วิศวกรผู้รับรอง
เลขทะเบียน สก.3748

รายชื่อบุคลากรแนบท้ายใบอนุญาต
เป็นนิติบุคคลผู้ให้บริการทดสอบหม้อน้ำ
บริษัท ไออาร์พี เอ็นจิเนียริ่ง จำกัด
ใบอนุญาตเลขที่ ๐๖๐๓-๐๓-๒๕๖๖-๐๑๒๔

๑. นายอิสรา พูนภักดี

ทั้งนี้ ตั้งแต่วันที่ ๒๐ กุมภาพันธ์ พ.ศ. ๒๕๖๖ ถึงวันที่ ๑๙ กุมภาพันธ์ พ.ศ. ๒๕๖๙

ให้ไว้ ณ วันที่ ๒๐ กุมภาพันธ์ พ.ศ. ๒๕๖๖

(นายสมหจน์ กวางแก้ว)
รองอธิบดี ปฏิบัติราชการแทน
อธิบดีกรมสวัสดิการและคุ้มครองแรงงาน

(นายอิสรา พูนภักดี)
วิศวกรผู้รับรอง
เลขทะเบียน สก.3748

ที่ รง ๐๕๐๔/ว ๑๙๙

กองความปลอดภัยแรงงาน
๑๘ ถนนบรมราชชนนี แขวงฉิมพลี
เขตตลิ่งชัน กรุงเทพฯ ๑๐๑๗๐

๑๔ มกราคม ๒๕๖๕

เรื่อง การขอขึ้นทะเบียนบุคคลเพื่อเป็นผู้ให้บริการทดสอบเครื่องจักร ปั้นจั่น และหม้อน้ำ

เรียน นายอิสรา พูนภักดี

อ้างถึง แบบคำขอและรับคำขอใบสำคัญฯ

สิ่งที่ส่งมาด้วย ใบสำคัญการขึ้นทะเบียนเป็นผู้ให้บริการทดสอบเครื่องจักร ปั้นจั่น และหม้อน้ำ ลงวันที่ ๑๔ มกราคม พ.ศ. ๒๕๖๕ จำนวน ๓ ฉบับ

ตามหนังสือที่อ้างถึง ท่านได้ยื่นแบบคำขอและรับคำขอใบสำคัญการขึ้นทะเบียนบุคคลตามแบบ ก.ภ.ทบ.๙ (บุคคลธรรมดา) เป็นผู้ให้บริการทดสอบเครื่องจักร ปั้นจั่น และหม้อน้ำ ตามกฎกระทรวงการขึ้นทะเบียนและการอนุญาตให้บริการเพื่อส่งเสริมความปลอดภัย อาชีวอนามัย และสภาพแวดล้อมในการทำงาน พ.ศ. ๒๕๖๔ เพื่อให้กรมสวัสดิการและคุ้มครองแรงงานพิจารณา นั้น

กรมสวัสดิการและคุ้มครองแรงงาน ได้พิจารณาแล้วเห็นว่าการยื่นแบบคำขอและรับคำขอใบสำคัญการขึ้นทะเบียนบุคคลเพื่อเป็นผู้ให้บริการทดสอบเครื่องจักร ปั้นจั่น และหม้อน้ำ ของท่านเป็นไปตามกฎกระทรวงการขึ้นทะเบียนและการอนุญาตให้บริการเพื่อส่งเสริมความปลอดภัยฯ ประกอบกฎกระทรวงกำหนดมาตรฐานในการบริหาร จัดการ และดำเนินการด้านความปลอดภัย อาชีวอนามัย และสภาพแวดล้อมในการทำงานเกี่ยวกับเครื่องจักร ปั้นจั่น และหม้อน้ำ พ.ศ. ๒๕๖๔ จึงออกใบสำคัญการขึ้นทะเบียนให้ท่านเป็นผู้ให้บริการทดสอบเครื่องจักร ปั้นจั่น และหม้อน้ำ โดยมีใบสำคัญเลขที่ ๐๖๐๑-๐๑-๒๕๖๕-๐๑๙๓ ใบสำคัญเลขที่ ๐๖๐๒-๐๑-๒๕๖๕-๐๑๙๓ และใบสำคัญเลขที่ ๐๖๐๓-๐๑-๒๕๖๕-๐๑๙๓ รายละเอียดปรากฏตามเอกสารสิ่งที่ส่งมาด้วย ทั้งนี้ ขอให้ท่านฯ ปฏิบัติตามกฎกระทรวงการขึ้นทะเบียนและการอนุญาตให้บริการเพื่อส่งเสริมความปลอดภัยฯ อย่างเคร่งครัด

จึงเรียนมาเพื่อทราบ

ขอแสดงความนับถือ

(นางสาวปรียานันท์ สิชิตศานต์)
ผู้อำนวยการกองความปลอดภัยแรงงาน

(นายอิสรา พูนภักดี)
วิศวกรผู้รับรอง
เลขทะเบียน สก.3748

กลุ่มงานทะเบียนความปลอดภัยในการทำงาน
โทรศัพท์ ๐ ๒๔๔๘ ๙๑๒๘ - ๓๙ ต่อ ๗๐๖
โทรสาร ๐ ๒๔๔๘ ๙๑๔๓

แบบ กภ.บค
บุคคลธรรมดา

กรมสวัสดิการและคุ้มครองแรงงาน
ใบสำคัญ
การขึ้นทะเบียนเป็นผู้ให้บริการทดสอบหม้อน้ำ

ใบสำคัญเลขที่ ๐๖๐๓-๐๓-๒๕๖๕-๐๑๙๓

ขึ้นทะเบียนให้ นายอิสรา พูนภักดี
เลขบัตรประจำตัวประชาชน ๓-๑๕๐๕-๐๐๑๒๘-๗๙-๖
ที่อยู่ เลขที่ ๕๒/๔ หมู่ที่ ๒ ตำบลบ้านสวน อำเภอเมืองชลบุรี จังหวัดชลบุรี
เป็นบุคคลผู้ให้บริการด้านความปลอดภัย อาชีวอนามัย และสภาพแวดล้อมในการทำงานตามกฎกระทรวงกำหนดมาตรฐานในการบริหาร จัดการ และดำเนินการด้านความปลอดภัย อาชีวอนามัย และสภาพแวดล้อมในการทำงานเกี่ยวกับเครื่องจักร ปั้นจั่น และหม้อน้ำ พ.ศ. ๒๕๖๔ ในการเป็นผู้ให้บริการทดสอบหม้อน้ำ หม้อต้มที่ใช้ของเหลวเป็นสื่อนำความร้อน และภาชนะรับความดัน ทั้งนี้ สามารถดำเนินการได้เฉพาะงานตามประเภทและขนาด ตามกฎหมายว่าด้วยวิศวกร ประกอบกับกฎกระทรวงการขึ้นทะเบียน และการอนุญาตให้บริการเพื่อส่งเสริมความปลอดภัย อาชีวอนามัย และสภาพแวดล้อมในการทำงาน พ.ศ. ๒๕๖๔ แห่งพระราชบัญญัติความปลอดภัย อาชีวอนามัย และสภาพแวดล้อมในการทำงาน พ.ศ. ๒๕๕๕

ให้ไว้ ณ วันที่ ๑๔ มกราคม พ.ศ. ๒๕๖๕

(นางสาวปรียานันท์ ลิขิตศาสตร์)
ผู้อำนวยการกองความปลอดภัยแรงงาน

(นายอิสรา พูนภักดี)
วิศวกรผู้รับรอง
เลขทะเบียน สก.3748

รายงานผลการตรวจทดสอบหม้อไอน้ำ

บริษัท อมตะ บี.กริม เพาเวอร์ (ระยอง) 5 จำกัด

หม้อน้ำหมายเลข 1 (HRSG 51)

หมายเลขเครื่อง 17491 – 1A

HRSG STEAM BOILER

ตรวจทดสอบเมื่อ วันที่ 6 เมษายน 2568

Inspection HRSG Boiler Picture Log

Client	: บริษัท อมตะ บี.กริม เพาเวอร์ (ระยอง) 5 จำกัด	Boiler No.	: 1 (HRSG 51)
Location	: 7/507 หมู่ 6 ต.มาบยางพร อ.ปลวกแดง จ.ระยอง	Serial	: 17491-1A
Equipment Name	: 1 (HRSG 51)	Date of Inspection	: 6 เมษายน 2568
Description	: ภาพถ่าย Name Plate		

HRSG HP : V17491-1A, HRSG HPEC : V17491-1B, HRSG LPEC : V17491-1C , HRSG LP : V17491-1D

(นาย อิสรา พูนภักดี)

วิศวกรผู้ตรวจสอบ

เลขทะเบียนใบอนุญาตประกอบวิชาชีพ ยก. 3748

วิศวกรตรวจทดสอบหม้อน้ำฯ ทะเบียนเลขที่ 6-65-1195

Inspection HRSG Boiler Picture Log

Client	: บริษัท อมตะ บี.กริม เพาเวอร์ (ระยอง) 5 จำกัด	Boiler No.	: 1 (HRSG 51)
Location	: 7/507 หมู่ 6 ต.มาบยางพร อ.ปลวกแดง จ.ระยอง	Serial	: 17491-1A
Equipment Name	: HP Superheater and Evaporator	Date of Inspection	: 6 เมษายน 2568
Description	: ภาพถ่าย Name Plate	HRSG HP : V17491-1A	

Name Plate HRSG HP : V17491-1A

(นาย อิสรา พูนภักดี)

วิศวกรผู้ตรวจสอบ

เลขทะเบียนใบอนุญาตประกอบวิชาชีพ ยก. 3748

วิศวกรตรวจทดสอบหม้อน้ำฯ ทะเบียนเลขที่ 6-65-1195

Inspection HRSG Boiler Picture Log

Client	: บริษัท อมตะ บี.กริม เพาเวอร์ (ระยอง) 5 จำกัด	Boiler No.	: 1 (HRSG 51)
Location	: 7/507 หมู่ 6 ต.มาบยางพร อ.ปลวกแดง จ.ระยอง	Serial	: 17491-1A
Equipment Name	: HP Economizer System	Date of Inspection	: 6 เมษายน 2568
Description	: ภาพถ่าย Name Plate	HRSG HP EC : V17491-1B	

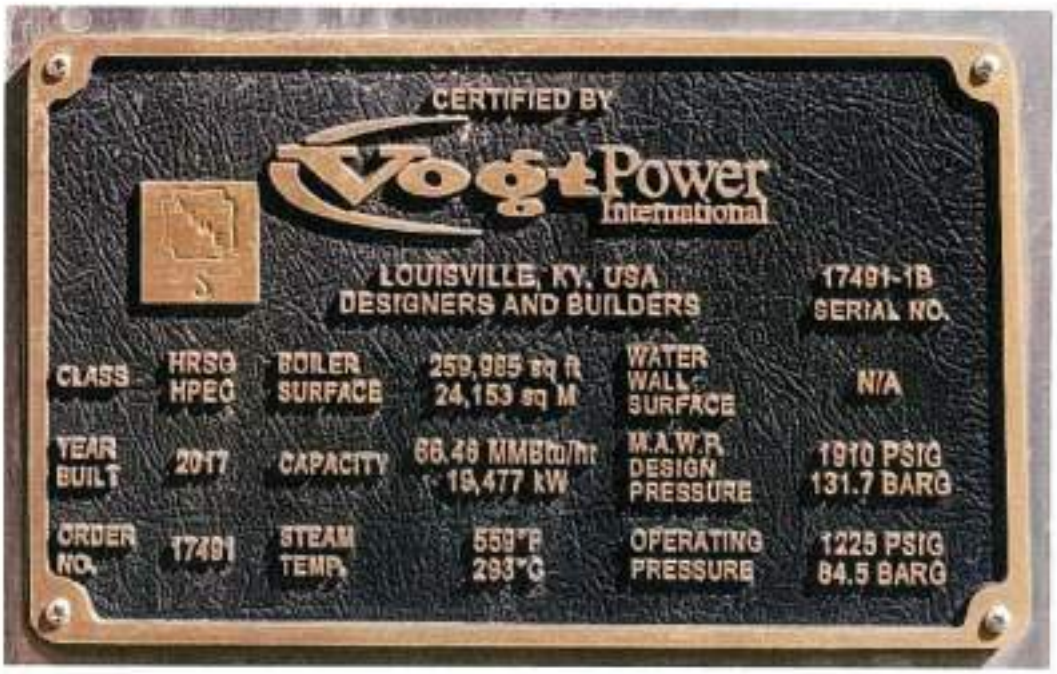

Name Plate HRSG HP EC : V17491-1B

(นาย อิสรา พูนภักดี)

วิศวกรผู้ตรวจสอบ

เลขทะเบียนใบอนุญาตประกอบวิชาชีพ สก. 3748

วิศวกรตรวจทดสอบหม้อน้ำฯ ทะเบียนแสบที่ 6-65-1195

Inspection HRSG Boiler Picture Log

Client	: บริษัท อมตะ บี.กริม เพาเวอร์ (ระยอง) 5 จำกัด	Boiler No.	: 1 (HRSG 51)
Location	: 7/507 หมู่ 6 ต.มาบยางพร อ.ปลวกแดง จ.ระยอง	Serial	: 17491-1A
Equipment Name	: LP Superheater and Evaporator	Date of Inspection	: 6 เมษายน 2568
Description	: ภาพถ่าย Name Plate	HRSG LP : V17491-1C	

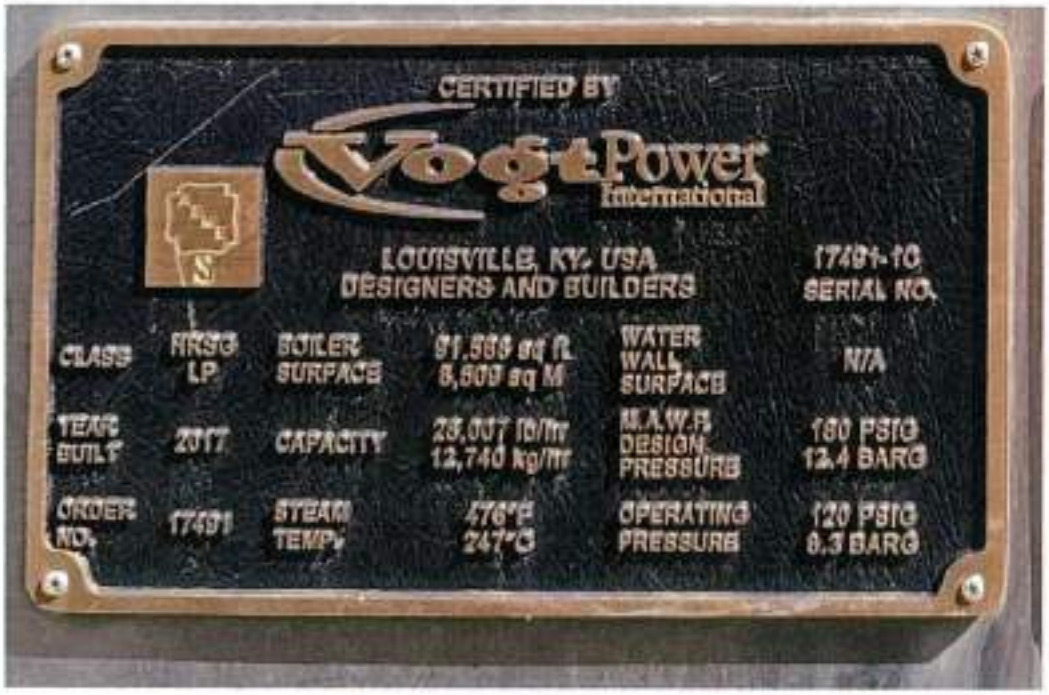

Name Plate HRSG LP : V17491-1C

(นาย ชิสรา ทูนภักดี)

วิศวกรผู้ตรวจสอบ

เลขทะเบียนใบอนุญาตประกอบวิชาชีพ สก. 3748

วิศวกรตรวจทดสอบหม้อน้ำฯ ทะเบียนเลขที่ 6-65-1195

Inspection HRSG Boiler Picture Log

Client	: บริษัท อมตะ บี.กริม เพาเวอร์ (ระยอง) 5 จำกัด	Boiler No.	: 1 (HRSG 51)
Location	: 7/507 ม6 ต. มาบยางพร อ.ปลวกแดง จ.ระยอง	Serial	: 17491-1A
Equipment Name	: LP Economizer System	Date of Inspection	: 6 เมษายน 2568
Description	: ภาพถ่าย Name Plate	HRSG LP EC : V17491-1D	

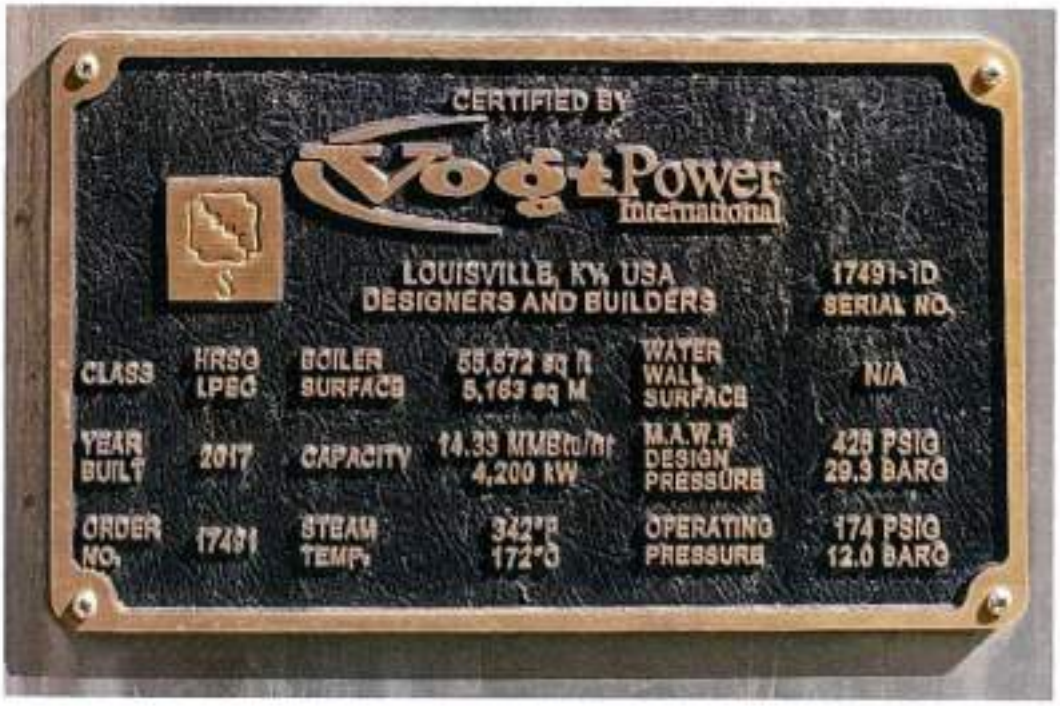

Name Plate HRSG LP EC : V17491-1D

(นาย อิสรา พูนภักดี)

วิศวกรผู้ตรวจสอบ

เลขทะเบียนใบอนุญาตประกอบวิชาชีพ สก. 3748

วิศวกรตรวจทดสอบหม้อน้ำฯ ทะเบียนเลขที่ 6-65-1195

Inspection HRSG Boiler Picture Log

Client	: บริษัท อมตะ บี.กริม เพาเวอร์ (ระยอง) 5 จำกัด	Boiler No.	: 2 (HRSG 52)
Location	: 7/507 หมู่ 6 ต. มาบยางพร อ.ปลวกแดง จ.ระยอง	Serial	: 17490-1A
Equipment Name	: HRSG BOILER 51	Date of Inspection	: 6 เมษายน 2568
Description	: ภาพถ่ายวิศวกรตรวจสอบพร้อมผู้ควบคุมหม้อไอน้ำ	HYDROSTATIC TEST	: LP DRUM

ภาพถ่ายวิศวกรตรวจสอบพร้อมผู้ควบคุมหม้อไอน้ำ

LP Loop Hydrostatic Pressure Test

Name Plate LPSH Loop Hydrostatic Pressure Test

LP Loop Hydrostatic Pressure Test 12.4 Bar

(นายอิสรา พูนภักดี)

วิศวกรผู้ตรวจสอบ

เลขทะเบียนใบอนุญาตประกอบวิชาชีพ สก. 3748

วิศวกรตรวจทดสอบหม้อน้ำฯ ทะเบียนเลขที่ 6-65-1195

Inspection HRSG Boiler Picture Log

Client	: บริษัท อมตะ บี.กริม เพาเวอร์ (ระยอง) 5 จำกัด	**Boiler No.**	: 1 (HRSG 51)
Location	: 7/507 หมู่ 6 ต. มาบยางพร อ.ปลวกแดง จ.ระยอง	**Serial**	: 17491-1A
Equipment Name	: HRSG BOILER 51	**Date of Inspection**	: 6 เมษายน 2568
Description	: ภาพถ่ายวิศวกรตรวจสอบพร้อมผู้ควบคุมหม้อไอน้ำ	**HYDROSTATIC TEST**	: LP ECO

ภาพถ่ายวิศวกรตรวจสอบพร้อมผู้ควบคุมหม้อไอน้ำ

LP ECO Loop Hydrostatic Pressure Test

Name Plate LP ECO Loop Hydrostatic Pressure Test

LP ECO Loop Hydrostatic Pressure Test 29.3 Bar

(นายอิสรา พูนภักดี)

วิศวกรผู้ตรวจสอบ

เลขทะเบียนใบอนุญาตประกอบวิชาชีพ ฉก. 3748

วิศวกรตรวจทดสอบหม้อน้ำฯ ทะเบียนเลขที่ 6-65-1195

Inspection HRSG Boiler Picture Log

Client	: บริษัท อมตะ บี.กริม เพาเวอร์ (ระยอง) 5 จำกัด	Boiler No.	: 1 (HRSG 51)
Location	: 7/597 หมู่ 6 ต. มาบยางพร อ.ปลวกแดง จ.ระยอง	Serial	: 17491-1A
Equipment Name	: HRSG BOILER 51	Date of Inspection	: 6 เมษายน 2568
Description	: ภาพถ่ายวิศวกรตรวจสอบพร้อมผู้ควบคุมหม้อไอน้ำ	HYDROSTATIC TEST	: HP DRUM + HPSH

ภาพถ่ายวิศวกรตรวจสอบพร้อมผู้ควบคุมหม้อไอน้ำ

Name Plate HPSH Loop Hydrostatic Pressure Test

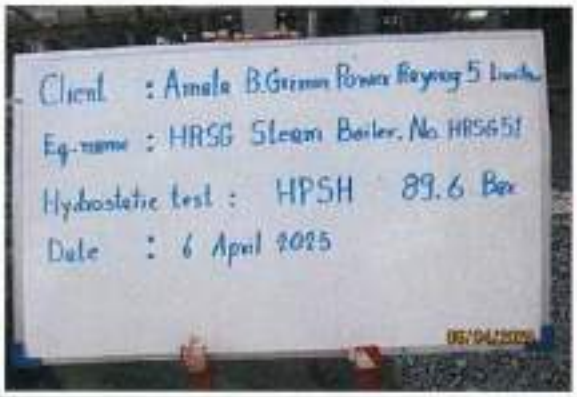

HP Drum + HPSH Loop Hydrostatic Pressure Test

HP Drum + HPSH Loop Hydrostatic Pressure Test 89.6 Bar

(นาย อิสรา พูนภักดี)

วิศวกรผู้ตรวจสอบ

เลขทะเบียนใบอนุญาตประกอบวิชาชีพ ถก. 3748

วิศวกรตรวจทดสอบหม้อน้ำฯ ทะเบียนเลขที่ 6-65-1195

Inspection HRSG Boiler Picture Log

Client	: บริษัท อมตะ บี.กริม เพาเวอร์ (ระยอง) 5 จำกัด	**Boiler No.**	: 1 (HRSG 51)
Location	: 7/507 ม.6 ต.มาบตาพุด อ.เมืองระยอง จ.ระยอง	**Serial**	: 17491-1A
Equipment Name	: HRSG BOILER 51	**Date of Inspection**	: 6 เมษายน 2568
Description	: ภาพถ่ายวิศวกรตรวจสอบพร้อมผู้ควบคุมหม้อไอน้ำ	**HYDROSTATIC TEST**	: HP DRUM + SH

ภาพถ่ายวิศวกรตรวจสอบพร้อมผู้ควบคุมหม้อไอน้ำ

HP ECO Loop Hydrostatic Pressure Test 89.6 Bar

HP ECO Loop Hydrostatic Pressure Test 89.6 Bar

HP ECO Loop Hydrostatic Pressure Test 89.6 Bar

(นาย ชิตรา พูนภักดี)

วิศวกรผู้ตรวจสอบ

เลขทะเบียนใบอนุญาตประกอบวิชาชีพ ยก. 3748

วิศวกรตรวจทดสอบหม้อน้ำฯ ทะเบียนเลขที่ 6-65-1195

Inspection HRSG Boiler Picture Log

Client	: บริษัท อมตะ นีเกริน เพาเวอร์ (ระยอง) 5 จำกัด	Boiler No.	: 1 (HRSG 51)
Location	: 7/507 ม6 ต. มาบยางพร อ.ปลวกแดง จ.ระยอง	Serial	: 17491-1A
Equipment Name	DRUM	Date of Inspection	: 5 เมษายน 2568
Description	: ภาพถ่าย LP Drum	HRSG LP : Drum	

HRSG LP : Drum

(นาย อิสรา พูนภักดี)

วิศวกรผู้ตรวจสอบ

เลขทะเบียนใบอนุญาตประกอบวิชาชีพ สก. 3748

วิศวกรตรวจทดสอบหม้อน้ำฯ ทะเบียนเลขที่ 6-65-1195

Inspection HRSG Boiler Picture Log

Client	: บริษัท อมตะ บี.กริม เพาเวอร์ (ระยอง) 5 จำกัด	Boiler No.	: 1 (HRSG 51)
Location	: 7/507 หมู่ ต. มาบยางพร อ.ปลวกแดง จ.ระยอง	Serial	: 17491-1A
Equipment Name	DRUM	Date of Inspection	: 5 เมษายน 2568
Description	: ภาพถ่ายด้านสัมผัสน้ำ LP Drum	HRSG LP : Drum	

ด้านสัมผัสน้ำ LP Drum

(นายอิสรา พูนภักดี)

วิศวกรผู้ตรวจสอบ

เลขทะเบียนใบอนุญาตประกอบวิชาชีพ สก. 3748

วิศวกรตรวจทดสอบหม้อน้ำฯ ทะเบียนเลขที่ 6-65-1195

Inspection HRSG Boiler Picture Log

Client	: บริษัท อมตะ บี.กริม เพาเวอร์ (ระยอง) 5 จำกัด	Boiler No.	: 2 (HRSG 52)
Location	: 7/507 หมู่ 6 ต.มาบยางพร อ.ปลวกแดง จ.ระยอง	Serial	: 17491-2A
Equipment Name	: HRSG BOILER 51	Date of Inspection	: 5 เมษายน 2568
Description	: ภาพถ่าย NDT LP Drum		

VT by Engineering

(นาย อิสรา พูนภักดี)

วิศวกรผู้ตรวจสอบ

เลขทะเบียนใบอนุญาตประกอบวิชาชีพ สก. 3748

วิศวกรตรวจทดสอบหม้อน้ำฯ ทะเบียนเลขที่ 6-65-1195

Inspection HRSG Boiler Picture Log

Client	: บริษัท อมตะ บี.กริม เพาเวอร์ (ระยอง) 5 จำกัด	Boiler No.	: 1 (HRSG 51)
Location	: 7/507 หมู่ 6 ต. มาบยางพร อ.ปลวกแดง จ.ระยอง	Serial	: 17491-1A
Equipment Name	DRUM	Date of Inspection	: 5 เมษายน 2568
Description	: ภาพถ่าย HP Drum	HRSG HP : Drum	

HRSG HP : Drum

(นาย อิสรา ชูมภักดี)

วิศวกรผู้ตรวจสอบ

เลขทะเบียนใบอนุญาตประกอบวิชาชีพ ฮก. 3748

วิศวกรตรวจทดสอบหม้อน้ำฯ ทะเบียนเลขที่ 6-65-1195

Inspection HRSG Boiler Picture Log

Client	: บริษัท อมคะ บี.ดริม เพาเวอร์ (ระยอง) 5 จำกัด	Boiler No.	: 1 (HRSG 51)
Location	: 7/507 ม.6 ต.มาบยางพร อ.ปลวกแดง จ.ระยอง	Serial	: 17491-1A
Equipment Name	DRUM	Date of Inspection	: 5 เมษายน 2568
Description	: ภาพถ่ายด้านสัมผัสน้ำ HP Drum	HRSG HP : Drum	

ด้านสัมผัสน้ำ HP Drum

(นายอิสรา ศุนภักดี)

วิศวกรผู้ตรวจสอบ

เลขทะเบียนใบอนุญาตประกอบวิชาชีพ สก. 3748

วิศวกรตรวจทดสอบหม้อน้ำฯ ทะเบียนเลขที่ 6-65-1195

Inspection HRSG Boiler Picture Log

Client	: บริษัท อมตะ ปี.กริน เพาเวอร์ (ระยอง) 5 จำกัด	Boiler No.	: 2 (HRSG 52)
Location	: 7/507 หมู่ 6 ต. มาบยางพร อ.ปลวกแดง จ.ระยอง	Serial	: 17491-2A
Equipment Name	: HRSG BOILER 51	Date of Inspection	: 5 เมษายน 2568
Description	: ภาพถ่าย NDT HP Drum		

VT by Engineering

(นาย อิสรา พูนภักดี)

วิศวกรผู้ตรวจสอบ

เลขทะเบียนใบอนุญาตประกอบวิชาชีพ สก. 3748

วิศวกรตรวจทดสอบหม้อน้ำฯ ทะเบียนเลขที่ 6-65-1195

Inspection HRSG Boiler Picture Log

Client	: บริษัท อมตะ บี.กริม เพาเวอร์ (ระยอง) 5 จำกัด	Boiler No.	: 1 (HRSG 51)
Location	: 7/507 หมู่ 6 ต. มาบยางพร อ.ปลวกแดง จ.ระยอง	Serial	: 17491-1A
Equipment Name	: HRSG BOILER 51	Date of Inspection	: 6 เมษายน 2568
Description	: ภาพถ่าย Feed Water Tank and Deaerator Drum		

Feed Water Tank and Deaerator Drum

(นาย อิสรา พูนภักดี)

วิศวกรผู้ตรวจสอบ

เลขทะเบียนใบอนุญาตประกอบวิชาชีพ สก. 3748

วิศวกรตรวจทดสอบหม้อน้ำฯ ทะเบียนเลขที่ 6-65-1195

Inspection HRSG Boiler Picture Log

Client	: บริษัท อมตะ บี.กริม เพาเวอร์ (ระยอง) 5 จำกั	Boiler No.	: 1 (HRSG 51)
Location	: 7/507 ม6 ต. มาบยางพร อ.ปลวกแดง จ.ระยอง	Serial	: 17491-1A
Equipment Name	: HRSG BOILER 51	Date of Inspection	: 5 เมษายน 2568
Description	: ภาพถ่าย Blowdown Tank		

Blow Down Tank

(นาย อิสรา พูนภักดี)

วิศวกรผู้ตรวจสอบ

เลขทะเบียนใบอนุญาตประกอบวิชาชีพ สก. 3748

วิศวกรตรวจทดสอบหม้อน้ำฯ ทะเบียนเลขที่ 6-65-1195

สำเนา

รายงานผลการตรวจทดสอบหม้อไอน้ำ

บริษัท อมตะ บี.กริม เพาเวอร์ (ระยอง) 5 จำกัด

หม้อน้ำหมายเลข 2 (HRSG 52)

หมายเลขเครื่อง 17491 – 2A

HRSG STEAM BOILER

ตรวจทดสอบเมื่อ วันที่ 15 กุมภาพันธ์ 2568

หนังสือรับรองของผู้ประกอบวิชาชีพวิศวกรรมควบคุม

เรื่อง ความเห็นเกี่ยวกับการให้ความเห็นชอบในการขยายระยะเวลาการตรวจทดสอบภายในหม้อน้ำ เพื่อประกอบการพิจารณาให้ความเห็นชอบในการตรวจสอบภายในหม้อน้ำทุกระยะเวลาเกินกว่า 1 ปี แต่ไม่เกิน 5 ปี ต่อการตรวจสอบหนึ่งครั้ง

เรียน ผู้อำนวยการสำนักเทคโนโลยีความปลอดภัย

วันที่ 15 กุมภาพันธ์ 2568

ข้าพเจ้า นายอิสรา พูนภักดี อาชีพ วิศวกร อายุ 52 ปี ที่ทำงาน บริษัท ไออาร์พี เอ็นจิเนียริ่งส์ จำกัด ที่อยู่เลขที่ 52/8 หมู่ 2 ตำบลบ้านสวน อำเภอเมืองชลบุรี จังหวัด ชลบุรี โทร 081 4045152 ได้รับอนุญาตให้ประกอบวิชาชีพวิศวกรรมควบคุม ตามพระราชบัญญัติวิศวกร พ.ศ. ๒๕๔๒ ประเภท/ระดับ สามัญวิศวกร ทะเบียนเลขที่ สก 3748 ตั้งแต่วันที่ 26 กรกฎาคม 2565 หมดอายุวันที่ 25 กรกฎาคม 2570 ได้รับอนุญาตให้ขึ้นทะเบียนเป็นวิศวกรตรวจทดสอบหม้อน้ำหรือหม้อต้มที่ใช้ของเหลวเป็นสื่อนำความร้อน กับกรมโรงงานอุตสาหกรรม ทะเบียนเลขที่ 6-65-1195 หมดอายุวันที่ 31 ธันวาคม 2569 และไม่อยู่ระหว่างสั่งพักหรือเพิกถอนใบอนุญาตฯ

ข้าพเจ้าเป็นผู้ตรวจทดสอบรับรองความปลอดภัยในการใช้หม้อน้ำ หมายเลข 2 (HRSG52) สร้างโดย Vogt Power International อัตราการผลิต 66.384 ตันต่อชั่วโมง (สำหรับ) HP และ 12.74 ตันต่อชั่วโมง (สำหรับ) LP ซึ่งติดตั้ง ณ บริษัท อมตะบี.กริม เพาเวอร์ (ระยอง) 5 จำกัด เลขที่ 7/507 หมู่ที่ 6 ตำบลมาบยางพร อำเภอปลวกแดง จังหวัดระยอง ทะเบียนผู้ประกอบอุตสาหกรรมเลขที่ 82250600225587 (น.88(2) – 2/2558 นอล)

ข้าพเจ้าได้ตรวจทดสอบอุปกรณ์ความปลอดภัย สภาพภายในและภายนอกตามเอกสารเครื่องของหม้อน้ำ เมื่อวันที่ 15 กุมภาพันธ์ 2568 อย่างถูกต้องตามหลักวิศวกรรมแล้ว มีความเห็นว่าหม้อน้ำเครื่องนี้สามารถใช้งานได้อย่างปลอดภัยในระยะเวลา 3 ปี

ข้าพเจ้าได้ลงลายมือชื่อ พร้อมแนบสำเนาใบประกอบวิชาชีพควบคุมไว้เป็นหลักฐาน

ลงชื่อ.....วิศวกร

(นายอิสรา พูนภักดี)

หมายเหตุ : 1. หม้อน้ำหมายเลข 2 (HRSG52)

2. หม้อน้ำหมายเลขเครื่อง (Serial Number) 17491 – 2A ให้หมายถึง หมายเลข 17491 – 2A หมายเลข 17491 – 2B, หมายเลข 17491 – 2C , หมายเลข LPEC17491-2D อุปกรณ์อื่นๆของหม้อไอน้ำภายใต้หมายเลขเครื่อง (Serial Number) 17491 – 2A

ลงชื่อ.....

(นายอิสรา หูนภักดี)

วิศวกรผู้ตรวจทดสอบ

สำนักเทคโนโลยีความปลอดภัย

กรมโรงงานอุตสาหกรรม

รหัส.....
เอกสารที่ ..... วันที่ .....
(ช่องที่ 1) สำหรับเจ้าหน้าที่ตรวจ

เอกสารรับรองความปลอดภัยในการใช้หม้อไอน้ำ

ข้าพเจ้า นายอิสรา พูนภักดี อายุ 52 ปี อาชีพ วิศวกร

พักอยู่บ้านเลขที่ 52/8 หมู่ 2 ตรอก/ซอย - ถนน -

ตำบล/แขวง บ้านสวน อำเภอ/เขต เมือง จังหวัด ชลบุรี โทรศัพท์ 081-4045-152

สถานที่ทำงาน เซนเตอร์ ฟิลลหริด อินเตอร์เนชั่นแนล โซลาร์เซ็นเตอร์ จำกัด ตั้งอยู่ ณ ระยอง โทรศัพท์ 081-4045-152

ได้รับใบอนุญาตประกอบวิชาชีพวิศวกรรมควบคุม สาขาวิศวกรรมเครื่องกล ตามพระราชบัญญัติวิศวกร พ.ศ.2542

เลขทะเบียน สกวก/พก สก 1748 ตั้งแต่วันที่ 26 กรกฎาคม 2565 ถึงวันที่ 25 กรกฎาคม 2570 และไม่อยู่ในระหว่างถูกสั่งพักหรือ

เพิกถอนใบอนุญาตฯ ตามสำเนาบัตรประจำตัวที่แนบมาพร้อมนี้ ได้รับใบอนุญาตให้ขึ้นทะเบียนเป็นวิศวกรตรวจทดสอบหม้อไอน้ำหรือ

หม้อต้มฯ เลขทะเบียน 6-65-1195 หมดอายุวันที่ 31 ธันวาคม พ.ศ. 2569

ข้าพเจ้าได้ทำการอัดน้ำทดสอบและตรวจสภาพหม้อไอน้ำของโรงงาน บริษัท อมละ บี.กริม เพาเวอร์ (ระยอง) 5 จำกัด

ซึ่งตั้งอยู่เลขที่ 7/507 หมู่ที่ 6 ตำบล/แขวง มาบตาพุด อำเภอ/เขต ปลวกแดง จังหวัด ระยอง โทรศัพท์

ประกอบกิจการ ผลิตและจำหน่ายกระแสไฟฟ้าและไอน้ำ ทะเบียนโรงงานเลขที่ 82250600225587 (น.88(2) – 2/2558 แก้ไข) หมดอายุวันที่

ตรวจทดสอบเมื่อวันที่ 15 กุมภาพันธ์ 2561 เวลา 8:00 - 17:00 น. โรงงานนี้มีหม้อไอน้ำทั้งหมด 2 เครื่อง

หม้อไอน้ำเครื่องนี้หมายเลข 2 (HRSG52) ขณะตรวจ หม้อไอน้ำเครื่องอื่นอยู่ในสภาพ ☐ กำลังใช้งาน ■ หยุด

ข้าพเจ้าได้ตรวจทดสอบสภาพหม้อไอน้ำเครื่องนี้ โดยการอัดน้ำ (Hydrostatic Test) ที่ความดันไม่น้อยกว่าเกณฑ์การอัดน้ำทดสอบตามที่ระบุในหน้า 4 ของเอกสารนี้ และขอรับรองว่าหม้อไอน้ำและอุปกรณ์ทุกส่วนของหม้อไอน้ำเป็นไปตามรายละเอียดแสดงไว้ในหน้า 2 และ 3 ของเอกสารนี้ ข้าพเจ้าได้ทำการตรวจสภาพและหรือทดสอบอย่างถูกต้องตามหลักวิศวกรรม และหม้อไอน้ำเครื่องนี้สามารถใช้งานได้อย่างปลอดภัย **เป็นเวลา 1 ปี นับตั้งแต่ตรวจทดสอบ** ที่ความดัน ซึ่งได้ปรับตั้งลิ้นนิรภัยให้เปิดระบายไอที่ความดันไม่เกิน 89.6 barg. (HP Drum) และ 12 และ 12.8 barg. (LP Drum) ข้าพเจ้าจึงลงลายมือชื่อไว้เป็นหลักฐาน

หมายเลขเครื่อง 17491 – 2A จาก Name Plate ; HP17491-2A, HPEC 17491-2B , LP 17491-2C, LPEC17491-2D

(ลงชื่อ) .....

(นายอิสรา พูนภักดี)

วิศวกรผู้ตรวจทดสอบ

ผู้รับใบอนุญาตประกอบกิจการโรงงาน

(ลงชื่อ) ..... วิทวัสดิ์ เชลิญรัตน์

(บริษัท อมละ บี.กริม เพาเวอร์ (ระยอง) 5 จำกัด)

ผู้รับใบอนุญาตประกอบกิจการโรงงาน

ก่อนการตรวจทดสอบฯ โปรดอ่านรายละเอียดในหน้า 4 ของเอกสารนี้

หม้อไอน้ำเครื่องนี้ เป็นแบบหม้อไอน้ำ ☐ เรือ ☐ รถไฟ ☐ ลูกหมู ■ ท่อน้ำขวาง ☐ ท่อไฟนอน

☐ ดัดแปลงเตาจากหม้อไอน้ำแบบ - อื่น ๆ (ระบุ) HRSG ใช้งานมาแล้ว 8 ปี

หมายเลขเครื่อง 17491-2A สร้างโดย Vogt Power International โดยออกแบบความดันสูงสุดไว้ที่ 89.6 barg. (HP) และ 12.4 barg. (LP)

อุณหภูมิ 528°C (HP), 247°C (LP) อัตราการผลิตไอ 66,384 T/hr(HP), 12,740 T/hr(LP) พื้นที่ผิวรับความร้อน 36,785 ตร.ม (HP) 13,672 ตร.ม (LP)

แรงม้าหม้อไอน้ำ 5,055.7 BHP การเคลื่อนย้ายหม้อไอน้ำ ■ ไม่เคย ☐ เคย เมื่อ .....

ชื่อผู้ควบคุมหม้อไอน้ำ นายวีรยุทธ เกิดสุข ขึ้นทะเบียนฯ เลขที่ 314-778-41637 หมดอายุ 31 ธันวาคม 2569

ชื่อผู้ควบคุมหม้อไอน้ำ นายสมบุญ ช่างบุตร ขึ้นทะเบียนฯ เลขที่ 314-778-38359 หมดอายุ 31 ธันวาคม 2569

ชื่อผู้ควบคุมหม้อไอน้ำ นายสิทธา วัฒนสำราญ ขึ้นทะเบียนฯ เลขที่ 314-778-50318 หมดอายุ 31 ธันวาคม 2569

ตัวหม้อไอน้ำ

การต่อแผ่นเหล็กหม้อไอน้ำเป็นแบบ ☐ เชื่อม ☐ หมุดย้ำ เปลือกหม้อไอน้ำหนา LP Drum = 12.7 mm. และ HP Drum = 60.3 mm.

ฉนวนหุ้มหม้อไอน้ำ ☐ ไม่มี ☐ มี เป็นแบบ ☐ ใยแก้ว ☐ Asbestos ☐ อิฐทนไฟ ■ อื่น ๆ Kaowool Blanket

ขนาดหม้อไอน้ำ ∅ 3.3 x 11.88 x 23 mt (กxยxส) ท่อไฟใหญ่ ขนาด ∅ - ยาว - หนา - จำนวน - ท่อ

ท่อไฟเล็กขนาด ∅ - ยาว - จำนวน - ท่อ

ท่อน้ำ (สำหรับหม้อไอน้ำแบบท่อน้ำ) HP ขนาด ∅ 38.1 mm. ยาว 15,881 mm. จำนวน ท่อ

ท่อน้ำ (สำหรับหม้อไอน้ำแบบท่อน้ำ) LP ขนาด ∅ 38.1 mm. ยาว 15,881 mm. จำนวน ท่อ

ผนังตามขนาด หนา ผนังด้านหน้า-หลัง (End Plates) หนา

ถังพักไอน้ำ (Header or Steam Dome) ขนาด ∅ HP. Drum : OD 1,7966 mm หนา 60.3 mm. และ LP Drum : OD 1,396.4 mm หนา 12.7 mm.

ช่องคนลอง (Manhole) ☐ ไม่มี ■ มี จำนวน 4 ช่อง, ช่องมือลอด (Handhole) ☐ ไม่มี ☐ มี จำนวน - ช่อง

- ช่องทำความสะอาดท่อน้ำ (สำหรับหม้อน้ำตั้งแบบท่อน้ำขวาง) ■ ไม่มี ☐ มี จำนวน - ช่อง

  เหล็กยึดโยง เป็นแบบ ☐ Stay Rod ขนาด ∅ - จำนวน - ชุด

  ☐ Stay Tube ขนาด ∅ - จำนวน - ชุด

  ☐ Gusset Stay หนา - ด้านหน้า - ชุด ด้านหลัง - ชุด

  ☐ อื่น ๆ - จำนวน ชุด

1. สภาพอุปกรณ์ของหม้อไอน้ำ

2.1 ลิ้นนิรภัย (Safety Valve) มีจำนวน 5 ชุดเป็นแบบ

☐ แบบน้ำหนักถ่วง ขนาด ∅ - ระบายไอน้ำที่ความดัน -

■ แบบสปริงมีคานงัด ขนาด ∅ HP-2 1/2",2" , LP:1 1/2" (3EA) ระบายไอน้ำที่ความดัน HP:89.6 barg , 85.2 barg

LP:12.8 barg ,12 barg , 11 barg

☐ แบบ - ขนาด ∅ - ระบายไอน้ำที่ความดัน -

2.2 ระบบความดัน

ความดันใช้งานปกติ (Working Pressure) HP: 78.7 barg LP:8.3 barg

เกจวัดความดัน (Pressure Gauge) จำนวน HP 1 ชุด, LP 1 ชุด สเกลสูงสุดอ่านได้ที่ HP:160 barg LP: 25 barg

สวิตช์ควบคุมความดัน (Pressure Control Switch) ☐ ไม่มี ■ มี จำนวน 2 ชุด

ตั้งไว้ที่ความดัน ควบคุมความดันอัตโนมัติ DCS Diff. Pressure -

2.3 ระบบน้ำ

หลอดแก้วและวาล์วปิดกั้น มีจำนวน HP 1 ชุด และ LP 1 ชุด พร้อมท่อระบายจากวาล์วหลอดแก้วถึงระดับพื้น

เครื่องควบคุมระดับน้ำ (Water Level Control) ☐ ไม่มี ■ มี เป็นแบบ ☐ ลูกลอย (Float Type) ☐ Electrode ■ Level transmitter

■ อื่น ๆ (ระบุ) Electro Eye - Hye System จำนวน HP Drum 1 ชุด, LP Drum 1 ชุด

เครื่องสูบน้ำเข้าหม้อไอน้ำ เป็นแบบ ☐ Reciprocation ☐ Turbine ■ อื่น ๆ Centrifugal จำนวน HP 3 ชุด, LP 3 ชุด

โดยใช้พลังงานจาก ■ ไฟฟ้า ☐ ไอน้ำ ☐ อื่น Motor Drive

วาล์วกันกลับ (Check Valve) ที่ท่อน้ำเข้าหม้อไอน้ำ ขนาด ∅ HP : 6 Inch 1 ชุด, LP: 3 Inch 1 ชุด ชุด

น้ำที่เข้าหม้อไอน้ำ ☐ น้ำประปา ☐ น้ำบาดาล ☐ น้ำบ่อ ☐ น้ำคลอง ■ อื่น ๆ (ระบุ) DEMINERIZED WATER

กรรมวิธีการปรับสภาพน้ำ ☐ ไม่มี ■ มี เป็นแบบ ☐ Softener (Resin) ☐ เติมสารเคมี ■ อื่น ๆ RO & CEDI

คุณสมบัติของน้ำเข้าหม้อไอน้ำ pH = 8.9-10.6 Hardness = - อื่น ๆ (ถ้ามี) -

วาล์วถ่ายน้ำ (Blow Down Valve) ขนาด ∅ 1 นิ้ว, 2 นิ้วและ 4 นิ้ว จำนวน HP 9 ชุด, LP 5 ชุด

2.4 ระบบการจ่ายไอน้ำ

วาล์วจ่ายไอน้ำ (Main Stream Valve) ขนาด ∅ HP : 8 นิ้ว, LP: 8 นิ้ว จำนวน HP 1 ชุด, LP 1 ชุด

วาล์วกันกลับที่ท่อจ่ายไอ (Check Valve) ขนาด ∅ HP : 8 นิ้ว, LP: 8 นิ้ว จำนวน HP 1 ชุด, LP 1 ชุด

ท่อจ่ายไอน้ำ (Stream Pipe) ขนาด ∅ HP : 8 นิ้ว, LP: 8 นิ้ว ,ฉนวนหุ้มท่อจ่ายไอน้ำ ☐ ไม่มี ■ มี เป็นแบบ Rock Wool

2.5 ระบบสัญญาณเตือนภัย ☐ ไม่มี ■ มี เป็นแบบ ☐ กระดิ่งไฟฟ้า ■ โซลน ☐ อื่น ๆ(ระบุ).....

2.6 ระบบการเผาไหม้

เชื้อเพลิงที่ใช้ ☐ ฟืน ☐ แกลบ ☐ ขี้เลื่อย ☐ น้ำมันดีเซล ☐ น้ำมันเตากรด.....

■ อื่น ๆ Flue Gas จาก Gas Turbine ปริมาณการใช้ 431.6 Ton/hr (ต่อหน่วยเวลา)

■ มีระบบควบคุมการจ่ายเชื้อเพลิง เป็นแบบ Gas Turbine ขนาดความสามารถ -

การจัดทิศทางเปลวไฟ ■ 1 Pass ☐ 2 Pass ☐ 3 Pass ☐ 4 Pass ปล่องไฟขนาด ∅ 2.896 mtr. สูง 45 mtr.

ลมช่วยในการเผาไหม้ ☐ ธรรมชาติ ☐ พัดลมขนาด -

สายล่อฟ้า ☐ ไม่จำเป็นต้องมี ■ จำเป็นต้องมี (■ มีเหมาะสม ☐ ยังไม่มี)

ปลั๊กหลอมละลาย (Fusible Plug) ■ ไม่มี ☐ มี จำนวน - ชุด

2.7 ระบบปรับปรุงประสิทธิภาพ

เครื่องอุ่นน้ำมัน (Oil Heater) ■ ไม่มี ☐ มี เป็นแบบ - อุ่นถึงอุณหภูมิ -

เครื่องอุ่นอากาศ (Air Heater) ■ ไม่มี ☐ มี เป็นแบบ - อุ่นถึงอุณหภูมิ -

เครื่องอุ่นน้ำ (Economizer) ☐ ไม่มี ■ มี เป็นแบบ Saturated Fin Tube อุ่นถึงอุณหภูมิ 166.2 °C

การนำคอนเดนเสตกลับมาใช้ ☐ ไม่มี ■ มี ปริมาณ 78 Ton/hr

2.8 ภาชนะรับแรงดันไอน้ำ (Pressure Vessel) ☐ ไม่มี ■ มี (ระบุ)

ท่อไอน้ำ ขนาด ∅ ใหญ่ (High Pressure) Main steam pipe OD. 8 inch to steam turbine จำนวน - ชุด

เครื่อง - จำนวน - ชุด ใช้ความดัน - ☐ มีลิ้นนิรภัยตั้งความดันที่ -

เครื่อง - จำนวน - ชุด ใช้ความดัน - ☐ มีลิ้นนิรภัยตั้งความดันที่ -

รายงานผลการตรวจหม้อน้ำก่อนรับรอง

ท่อไฟใหญ่	☐ เรียบร้อย	☐ บกพร่อง	ท่อไฟเล็ก	☐ เรียบร้อย	☐ บกพร่อง
ผนังด้านหน้า-หลัง	☐ เรียบร้อย	☐ บกพร่อง	ผนังตา	■ เรียบร้อย	☐ บกพร่อง
เหล็กยึดโยง	■ เรียบร้อย	☐ บกพร่อง	ช่องมือลอด	☐ เรียบร้อย	☐ บกพร่อง
ช่องคนลง	■ เรียบร้อย	☐ บกพร่อง	ท่อน้ำ	■ เรียบร้อย	☐ บกพร่อง
เกจวัดความดัน	■ เรียบร้อย	☐ บกพร่อง	ลิ้นนิรภัย	■ เรียบร้อย	☐ บกพร่อง
เครื่องสูบน้ำเข้าหม้อไอน้ำ	■ เรียบร้อย	☐ บกพร่อง	สวิตช์ควบคุมความดัน	■ เรียบร้อย	☐ บกพร่อง
ระบบสัญญาณเตือนภัย	■ เรียบร้อย	☐ บกพร่อง	เครื่องควบคุมระดับน้ำ	■ เรียบร้อย	☐ บกพร่อง
สภาพตะกรันภายในหม้อไอน้ำ	■ ไม่มี	☐ มี	☐ มาก	☐ ปานกลาง	☐ น้อย

รายละเอียดของส่วนที่บกพร่องและอื่น ๆ

.....

.....

ข้าพเจ้าได้ให้ผู้รับใบอนุญาตประกอบกิจการโรงงานดำเนินการซ่อมแซมแก้ไขจนเป็นที่เรียบร้อยสมบูรณ์แล้ว ก่อนลงลายมือชื่อรับรอง

.....(วิศวกร ผู้ตรวจทดสอบ)

(.....นายอิสรา.....ชูนภักดี.....)

ข้อกำหนดในการตรวจทดสอบฯ และกรอกรายงานในเอกสารรับรองความปลอดภัยในการใช้หม้อไอน้ำ

ชื่อโรงงาน :-	ใช้ตามที่ระบุไว้ในใบอนุญาตประกอบกิจการโรงงาน ถ้าไม่มีให้ใช้ชื่อผู้รับใบอนุญาตฯ
ประกอบกิจการโรงงาน :-	ใช้ตามที่ระบุในกรรมวิธีที่ 7 ของหน้าที่ 1 ในใบอนุญาตประกอบกิจการโรงงาน, รง. 4 (นับจากวันที่ลงมา)
ทะเบียนโรงงานลงที่ :-	ใช้ตามที่ระบุในกรอบสี่เหลี่ยมมุมบนด้านขวาของใบอนุญาตประกอบกิจการโรงงาน, รง. 4
หม้อไอน้ำหมายเลข :-	หม้อไอน้ำที่ติดตั้งก่อนถือว่าเป็นหมายเลข 1
ออกแบบความดันสูงสุด :-	ความดันสูงสุดที่ผู้สร้างกำหนดให้ใช้ (Max Allowable Working Pressure)
สวิตช์ควบคุมความดัน :-	(ถ้ามี) จะต้องตั้งไว้ไม่เกินความดันใช้งานสูงสุด (Max Working Pressure)
อิ้นนิรภัย :-	- ต้องติดตั้งที่ปล่องหรือถังพักไอ **และต้องไม่มีวาล์วต่อคั่นกลาง** - ต้องเป็นแบบน้ำหนักถ่วงหรือแบบสปริงที่มีกานจัด **ไม่มีกานจัดห้ามใช้** หรือแบบอื่นที่สามารถตรวจสอบการเปิดได้ง่าย มีขนาดที่สามารถระบายไอได้ทันเมื่อความดันเกินกำหนดและปรับตั้งให้ระบายที่ความดันไม่เกิน 10% ของความดันใช้งานสูงสุด (Max Working Pressure) แต่ต้องไม่เกิน 3% ของการออกแบบความดันสูงสุด (Max Allowable Working Pressure) - ต้องมีไม่น้อยกว่า 2 ชุด สำหรับหม้อไอน้ำที่มีพื้นที่ผิวรับความร้อนตั้งแต่ 50 ตารางเมตรขึ้นไป
ตะกรัน :-	ถ้ามีหนาตั้ง 1/16 นิ้วจะต้องล้างออก
การตรวจทดสอบ :-	ให้ใช้หลักวิชาการทางด้านวิศวกรรม หรือมาตรฐานสากลอันเป็นที่ยอมรับที่กรมโรงงานอุตสาหกรรมเห็นชอบ
การอัดน้ำทดสอบ :-	ต้องใช้ความดัน 1.5 เท่าของความดันสูงสุดที่ออกแบบ (Max Allowable Working Pressure) ถ้าความดันใช้งานสูงสุดต่ำกว่า 60 ปอนด์ต่อตารางนิ้ว ต้องใช้ความดันไม่น้อยกว่า 2 เท่าของความดันใช้งานสูงสุด ถ้าความดันใช้งานสูงสุดอยู่ในระหว่าง 60-80 ปอนด์ต่อตารางนิ้ว ต้องใช้ความดันไม่น้อยกว่า 120 ปอนด์ต่อตารางนิ้ว

หมายเหตุ

1. ในการตรวจทดสอบหากพบว่า ส่วนประกอบและหรืออุปกรณ์ของหม้อไอน้ำส่วนหนึ่งส่วนใดมีข้อบกพร่องชำรุด หรือไม่ทำงาน วิศวกรผู้ตรวจทดสอบ ต้องแจ้งให้ผู้รับใบอนุญาตประกอบกิจการโรงงาน ดำเนินการซ่อมปรับปรุงแก้ไข หรือเปลี่ยนใหม่ให้อยู่ในสภาพเรียบร้อย ให้แล้วเสร็จสมบูรณ์ก่อนลงลายมือชื่อรับรอง
2. ต้องกรอกข้อความให้ครบทุกข้อ ข้อความใดที่ไม่ได้กรอกต้องแสดงเหตุผล มิฉะนั้น เจ้าหน้าที่จะถือว่าไม่ได้ตรวจทดสอบหรือดูสภาพส่วนประกอบหรืออุปกรณ์ของหม้อไอน้ำนั้น และอาจพิจารณาไม่รับเอกสารฯ ฉบับนี้
3. ข้อความนอกเหนือจากที่ระบุในข้อกำหนด ให้ใช้หลักวิชาการทางวิศวกรรม

คำรับรองของผู้ประกอบกิจการโรงงาน

1. ข้าพเจ้าขอรับรองว่าในการตรวจทดสอบความปลอดภัยในการใช้หม้อไอน้ำครั้งนี้ วิศวกรผู้ตรวจทดสอบได้ดำเนินการตรวจทดสอบหม้อไอน้ำตามที่กรมโรงงานอุตสาหกรรมกำหนดจริง หากกรมโรงงานอุตสาหกรรมตรวจพบในภายหลังว่า มิได้มีการตรวจทดสอบหม้อไอน้ำตามที่กรมโรงงานอุตสาหกรรมกำหนด ข้าพเจ้ายินดีให้กรมโรงงานอุตสาหกรรมเพิกถอนใบอนุญาตประกอบกิจการโรงงานโดยไม่มีเงื่อนไข
2. เมื่อครบกำหนดที่จะต้องตรวจทดสอบหม้อไอน้ำครั้งต่อไป ข้าพเจ้าจะต้องแจ้งเป็นหนังสือให้กรมโรงงานอุตสาหกรรม ในกรณีโรงงานตั้งอยู่ในเขตกรุงเทพมหานคร หรือ สำนักงานอุตสาหกรรมจังหวัด ในกรณีโรงงานอุตสาหกรรมตั้งอยู่นอกเขตกรุงเทพมหานคร ทราบล่วงหน้าไม่น้อยกว่า 7 วัน เพื่อที่กรมโรงงานอุตสาหกรรม หรือ สำนักงานอุตสาหกรรมจังหวัด จะได้ส่งเจ้าหน้าที่ไปสังเกตการณ์ในการตรวจทดสอบหม้อไอน้ำ

ข้าพเจ้าได้อ่านและเข้าใจในข้อความดังกล่าวข้างต้นแล้ว จึงลงลายมือชื่อไว้เป็นสำคัญ

ลงชื่อ ศุภรัตน์ เจริญรัตน์ ผู้รับใบอนุญาตประกอบกิจการโรงงาน

(บริษัท อมตะ ปิ.กรีน เพนวอร์ (ระยอง) 5 จำกัด)

สำนักทดสอบและความปลอดภัย
กรมโรงงานอุตสาหกรรม

รายงานผลการตรวจทดสอบความปลอดภัยในการใช้หม้อไอน้ำ

การตรวจสอบ (Inspection)

บริษัท อมตะ นีเจริน เพาเวอร์ (ระยอง) 5 จำกัด หม้อน้ำหมายเลข 2 (HRSG52)

หมายเลขเครื่อง 17491 – 2A | Name Plate ; HP17491-2A, HPEC 17491-2B , LP 17491-2C, LPEC 17491-2D

1. ประวัติการชำรุดและการซ่อมแซมโครงสร้าง อุปกรณ์ และการล้างทำความสะอาดในรอบ 1 ปีที่ผ่านมา ดังนี้

1. ลักษณะการชำรุด - ซ่อมโดย - เมื่อ -
2. ลักษณะการชำรุด - ซ่อมโดย - เมื่อ -
3. ลักษณะการชำรุด - ซ่อมโดย - เมื่อ -
4. วิศวกรควบคุมและจำนวนการซ่อม ชื่อ - ทะเบียนเลขที่ -

2. การตรวจสอบสภาพภายนอก (External Inspection)

การติดตั้งหม้อไอน้ำ ปกติ การติดตั้งระบบท่อ ปกติ

สภาพภายนอกหม้อไอน้ำ (โครงสร้าง) ปกติ

การติดตั้งอุปกรณ์ต่ำไฟ หรือ อุปกรณ์ความปลอดภัย ตามกฎหมายกำหนด ☑ ถูกต้อง ☐ ไม่ถูกต้อง (ระบุ)

3. การตรวจสอบสภาพภายใน (Internal inspection)

3.1. สภาพผิวด้านสัมผัสไฟ

สภาพท่อไฟใหญ่ ท่อไฟเล็ก ท่อน้ำ ผนังตาผนังหน้า-หลัง Smoke Chamber ปูนทนไฟ อิฐทนไฟ ฉนวนกันความร้อน (ลักษณะการชำรุด เสียรูป แตกร้าว รั่วซึม กัดกร่อน ขี้เถ้า เขม่า หรือ ความผิดปกติต่างๆ)

สภาพปกติ พร้อมใช้งาน

3.2. สภาพผิวด้านสัมผัสน้ำ

สภาพท่อไฟใหญ่ ท่อไฟเล็ก ท่อน้ำ ผนังตาผนังหน้า-หลัง Upper Drum Lower Drum(ลักษณะการชำรุด เสียรูป แตกร้าว รั่วซึม กัดกร่อน ตะกรัน โคลนตะกอน การอุดตันของอุปกรณ์ความปลอดภัยต่างๆ)

-

4. การทดสอบความแข็งแรงของโครงสร้างโดยการอัดน้ำ (Hydrostatic Test)

กรณี ☐ สร้างใหม่ ☑ ประจำปี ☐ ดัดแปลง ☐ ซ่อมแซม ☐ เปลี่ยนโครงสร้าง ☐ อื่นๆ

ทดสอบที่ความดัน LP = 12.4 , LPEC = 29.3 (Barg) , HP = 89.6 , HPEC = 131.7 (Barg) ผลการทดสอบ ☑ ปกติ ☐ ควรปรับปรุง

หากควรปรับปรุง สาเหตุ - วิธีการปรับปรุง

การทำงานของลิ้นนิรภัย (Safety Valve) ผลการทดสอบ ☑ ปกติ ☐ ควรปรับปรุง

หากควรปรับปรุง สาเหตุ - วิธีการปรับปรุง

5. การตรวจสอบสภาพการทำงานของระบบหรืออุปกรณ์ความปลอดภัย (Functional Test)

-การทำงานของเกจวัดความดัน ☑ ปกติ ☐ ควรปรับปรุง

-การทำงานของเครื่องสูบน้ำ (Feed Water Pump) ☑ ปกติ ควรปรับปรุง

-การทำงานของเครื่องควบคุมระดับน้ำ ☑ ปกติ ☐ ควรปรับปรุง

-การทำงานของระบบสัญญาณเตือนภัย ☑ ปกติ ☐ ควรปรับปรุง

-การทำงานของเครื่องควบคุมความดัน (Pressure Control Switch) ☑ ปกติ ☐ ควรปรับปรุง

-หลอดแก้วบอกระดับน้ำ ☑ ปกติ ☐ ควรปรับปรุง

-การทำงานของลิ้นกันกลับ (Check Valve) ☑ ปกติ ☐ ควรปรับปรุง

6. การตรวจสอบสภาพการทำงานของระบบหรืออุปกรณ์ทั่วไป (General Equipment)

-การทำงานของเกจวัดอุณหภูมิปล่อง ☑ ปกติ ☐ ควรปรับปรุง.....

-ภาชนะเก็บน้ำป้อนเข้าหม้อไอน้ำ หรือ ถังคอนเดนเสต รวมถึงระบบท่อ ☑ ปกติ ☐ ควรปรับปรุง.....

-เครื่องปรับปรุงคุณภาพน้ำก่อนป้อนเข้าหม้อไอน้ำ ☑ ปกติ ☐ ควรปรับปรุง.....

-ระบบป้องกันอันตรายจากฟ้าผ่า ☑ ปกติ ☐ ควรปรับปรุง.....

-ฉนวนทั้งหมด (ตัวหม้อไอน้ำระบบท่ออุปกรณ์การใช้ไอน้ำฯลฯ) ☑ ปกติ ☐ ควรปรับปรุง.....

-วาล์วถ่ายน้ำ (Blow Down Valve) ☑ ปกติ ☐ ควรปรับปรุง.....

-ลิ้นหรือวาล์วที่ติดทั้งกับหม้อไอน้ำ ☑ ปกติ ☐ ควรปรับปรุง.....

7. รายละเอียดของส่วนที่บกพร่องเพิ่มเติม และข้อเสนอแนะในการปรับปรุงแก้ไข

1. .....
2. .....
3. .....
4. .....
5. .....

8. สรุปผลการตรวจสอบ

☑ 8.1 ขอรับรองว่าหม้อไอน้ำเครื่องนี้สามารถใช้งานได้โดยปลอดภัยภายใต้ความดันใช้งานไม่เกิน LP 12.4 Bar. (g) , HP 89.6 Bar. (g) เป็นเวลา 3 ปี นับตั้งแต่วันที่ตรวจสอบ

☐ 8.2 ขอรับรองว่าหม้อไอน้ำเครื่องนี้ตามข้อ 8.1 และผู้ประกอบกิจการโรงงานได้แก้ไขตามรายละเอียด ดังนี้แล้ว

8.2.1 .....-.....

8.2.2 .....-.....

อื่นๆ.....-.....

ข้าพเจ้าขอรับรองว่าข้อมูลข้างต้นเป็นความจริงทุกประการจึงได้ลงลายมือชื่อรับรองไว้เป็นหลักฐาน

.....วิศวกรผู้ตรวจทดสอบ

(นายอิสรา พูนภักดี)

หมายเหตุ

1. เอกสารนี้ถือว่าเป็นส่วนหนึ่งของเอกสารรับรองความปลอดภัยในการใช้หม้อไอน้ำหรือหม้อต้มฯ ฟ้ายระเบียบกรมโรงงานอุตสาหกรรมว่าด้วยการขึ้นทะเบียนเป็นวิศวกรควบคุมและอำนวยการใช้หม้อไอน้ำ วิศวกรตรวจทดสอบหม้อไอน้ำหรือหม้อต้มที่ใช้ของเหลวเป็นสื่อนำความร้อน วิศวกรควบคุมการสร้างหรือซ่อมหม้อไอน้ำหรือหม้อต้มที่ใช้ของเหลวเป็นสื่อนำความร้อนและผู้ควบคุม ประจำหม้อไอน้ำหรือหม้อต้มที่ใช้ของเหลวเป็นสื่อนำความร้อน พ.ศ.2528
2. ในการตรวจทดสอบหากพบว่า ส่วนประกอบและหรืออุปกรณ์ของหม้อไอน้ำหรือหม้อต้มฯ ส่วนหนึ่งส่วนใดหรือทั้งหมดมีข้อบกพร่องไม่ สมบูรณ์เชิงวิศวกรรม วิศวกรผู้ตรวจทดสอบต้องบันทึกข้อบกพร่องพร้อมคำแนะนำวิธีการแก้ไขในเอกสารรายงานฉบับนี้และแจ้งให้ผู้ประกอบ กิจการโรงงาน ดำเนินการซ่อมปรับปรุงแก้ไข หรือเปลี่ยนใหม่อยู่ในสภาพเรียบร้อยให้แล้วเสร็จสมบูรณ์
3. ต้องกรอกข้อความให้ครบทุกข้อ ข้อความใดที่ไม่ได้กรอก ต้องแสดงเหตุผล มิฉะนั้น เจ้าหน้าที่จะถือว่าไม่ได้ตรวจทดสอบหรือตรวจสภาพ ส่วนประกอบหรืออุปกรณ์ของหม้อไอน้ำหรือหม้อต้มฯนั้น และอาจพิจารณาไม่รับเอกสารฯ ฉบับนี้
4. ข้อความนอกเหนือจากที่ระบุในข้อกำหนด ให้ใช้หลักวิชาการทางวิศวกรรม
5. ต้องแนบภาพถ่ายซึ่งแสดงได้ว่าการตรวจทดสอบได้กระทำโดยวิศวกรผู้ตรวจทดสอบ ทั้งนี้รายละเอียดของภาพถ่ายให้เป็นไปตามที่เจ้าหน้าที่

ที่ อก ๐๓๐๒ / ๑๖๒๕๒

กรมโรงงานอุตสาหกรรม
ถนนพระรามที่ ๖ แขวงทุ่งพญาไท
เขตราชเทวี กรุงเทพฯ ๑๐๔๐๐

๐๓ พฤศจิกายน ๒๕๖๕

เรื่อง อนุญาตให้ต่ออายุทะเบียนเป็นวิศวกรตรวจทดสอบหม้อน้ำหรือหม้อต้มที่ใช้ของเหลวเป็นสื่อนำความร้อน

เรียน นายอิสรา พูนภักดี

ตามที่ท่าน นายอิสรา พูนภักดี ผู้ได้รับใบอนุญาตประกอบวิชาชีพวิศวกรรมควบคุม สาขาวิศวกรรมเครื่องกล ตามพระราชบัญญัติวิศวกร พ.ศ.๒๕๔๒ ประเภท สามัญวิศวกร เลขทะเบียน สก.๓๗๔๘ ได้ขอต่ออายุทะเบียนเป็นวิศวกรตรวจทดสอบหม้อน้ำหรือหม้อต้มที่ใช้ของเหลวเป็นสื่อนำความร้อนไว้ต่อกรมโรงงานอุตสาหกรรม นั้น

กรมโรงงานอุตสาหกรรมพิจารณาแล้วอนุญาตให้ นายอิสรา พูนภักดี ต่ออายุทะเบียนเป็นวิศวกรตรวจทดสอบหม้อน้ำหรือหม้อต้มที่ใช้ของเหลวเป็นสื่อนำความร้อน ตามทะเบียนเลขที่ ๖-๖๕-๑๑๗๕ จนถึงวันที่ ๓๑ ธันวาคม ๒๕๖๙ ทั้งนี้ ใบอนุญาตประกอบวิชาชีพวิศวกรรมควบคุมต้องยังไม่หมดอายุ หรือมีการต่ออายุเป็นที่เรียบร้อยแล้ว

อนึ่ง กรมโรงงานอุตสาหกรรมได้จัดทำ "ระบบจัดการหม้อน้ำหรือหม้อต้มที่ใช้ของเหลวเป็นสื่อนำความร้อน" เพื่อให้วิศวกรตรวจทดสอบรายงานความปลอดภัยผ่านระบบดังกล่าว โดยท่านจะสามารถใช้งานระบบได้ก็ต่อเมื่อท่านยืนยันตัวตนและได้รับรหัสผ่าน (password) รายละเอียดตามสิ่งที่ส่งมาด้วย

จึงเรียนมาเพื่อโปรดทราบ และขอให้ท่านปฏิบัติงานตามหน้าที่ความรับผิดชอบและจรรยาบรรณแห่งวิชาชีพวิศวกรรมโดยเคร่งครัด

ขอแสดงความนับถือ

(นายบวร สัตยาวุฒิพงศ์)
ผู้อำนวยการกองส่งเสริมเทคโนโลยีความปลอดภัยโรงงาน
ปฏิบัติราชการแทน อธิบดีกรมโรงงานอุตสาหกรรม

(นายอิสรา พูนภักดี)
วิศวกรผู้รับรอง
เลขทะเบียน สก.3748

สิ่งที่ส่งมาด้วย

(https://www.diw.go.th/regis_engineer/)

กองส่งเสริมเทคโนโลยีความปลอดภัยโรงงาน
โทร. ๐ ๒๔๓๐ ๖๓๑๔ ต่อ ๒๓๑๒, ๒๓๑๓
โทรสาร ๐ ๒๔๓๐ ๖๓๑๔ ต่อ ๒๓๙๙
ไปรษณีย์อิเล็กทรอนิกส์ sarabap@diw.mail.go.th

สภาวิศวกร

ตามพระราชบัญญัติวิศวกร พ.ศ. ๒๕๔๒

ออกบัตรนี้ไว้เพื่อแสดงว่า

นายอิสรา พูนภักดี

มีสิทธิประกอบวิชาชีพวิศวกรรมควบคุม

ระดับ สามัญวิศวกร สาขา วิศวกรรมเครื่องกล

ตามใบอนุญาตเลขทะเบียน สก.๓๗๔๘

ตั้งแต่วันที่ ๒๖ กรกฎาคม ๒๕๕๕

เลขบัตร ๒๑๔๓๔๕

สำนำถูกต้อง

.....

(นายอิสรา พูนภักดี)

วิศวกรผู้รับรอง

เลขทะเบียน สก.3748

นิตยา จันทร์เรือง มหาผล

(นางนิตยา จันทร์เรือง มหาผล)

เลขาธิการสภาวิศวกร

(นายเรืองศักดิ์ วัชรพงศ์)

นายกสภาวิศวกร

สภาวิศวกร

ตามพระราชบัญญัติวิศวกร พ.ศ. ๒๕๕๒
ออกใบอนุญาตนี้ให้ไว้เพื่อแสดงว่า

บริษัท ไออาร์พี เอ็นจิเนียริ่ง จำกัด

ได้รับอนุญาตประกอบวิชาชีพวิศวกรรมควบคุม

เลขทะเบียน ๑๔๔๔/๖๑

ตั้งแต่วันที่ ๑๗ พฤศจิกายน ๒๕๖๗ ถึงวันที่ ๑๖ พฤศจิกายน ๒๕๗๐

(นายอิสรา พูนภักดี)
วิศวกรผู้รับรอง

เลขทะเบียน สก.3748

(นายธเนศ วีระศิริ)
นายกสภาวิศวกร

สแกน Q.R. Code เพื่อตรวจสอบเอกสาร

วันที่พิมพ์เอกสาร ๑ พ.ย. ๒๕๖๗ ๑๔.๕๒ น.

ที่ รง ๐๕๐๔/๒๒๕๓

กรมสวัสดิการและคุ้มครองแรงงาน
ถนนมิตรไมตรี ดินแดง กรุงเทพฯ ๑๐๔๐๐

๒๐ กุมภาพันธ์ ๒๕๖๖

เรื่อง การขออนุญาตเป็นผู้ให้บริการทดสอบเครื่องจักร ปั้นจั่น และหม้อน้ำ

เรียน กรรมการผู้จัดการบริษัท ไออาร์พี เอ็นจิเนียริ่ง จำกัด

อ้างถึง แบบคำขอและรับคำขอใบอนุญาตฯ ของบริษัท ไออาร์พี เอ็นจิเนียริ่ง จำกัด

สิ่งที่ส่งมาด้วย ใบอนุญาตเป็นผู้ให้บริการทดสอบเครื่องจักร ปั้นจั่น และหม้อน้ำ และรายชื่อบุคลากรแนบท้าย ลงวันที่ ๒๐ กุมภาพันธ์ พ.ศ. ๒๕๖๖ จำนวน ๓ ฉบับ

ตามหนังสือที่อ้างถึง บริษัท ไออาร์พี เอ็นจิเนียริ่ง จำกัด ได้ยื่นแบบคำขอและรับคำขอใบอนุญาต พร้อมเอกสารหลักฐานประกอบการขอเป็นผู้ให้บริการทดสอบเครื่องจักร ปั้นจั่น และหม้อน้ำ ตามกฎกระทรวงการขึ้นทะเบียนและการอนุญาตให้บริการเพื่อส่งเสริมความปลอดภัย อาชีวอนามัย และสภาพแวดล้อมในการทำงาน พ.ศ. ๒๕๖๔ เพื่อให้กรมสวัสดิการและคุ้มครองแรงงานพิจารณา ความละเอียดแจ้งแล้ว นั้น

กรมสวัสดิการและคุ้มครองแรงงาน ได้พิจารณาแล้วเห็นว่าการยื่นแบบคำขอและรับคำขอใบอนุญาตเป็นผู้ให้บริการทดสอบเครื่องจักร ปั้นจั่น และหม้อน้ำ ของบริษัท ไออาร์พี เอ็นจิเนียริ่ง จำกัด เป็นไปตามกฎกระทรวงกำหนดมาตรฐานในการบริหาร จัดการ และดำเนินการด้านความปลอดภัย อาชีวอนามัย และสภาพแวดล้อมในการทำงานเกี่ยวกับเครื่องจักร ปั้นจั่น และหม้อน้ำ พ.ศ. ๒๕๖๔ และกฎกระทรวงการขึ้นทะเบียนและการอนุญาตให้บริการเพื่อส่งเสริมความปลอดภัยฯ จึงออกใบอนุญาตให้บริษัท ไออาร์พี เอ็นจิเนียริ่ง จำกัด เป็นผู้ให้บริการทดสอบเครื่องจักร ปั้นจั่น และหม้อน้ำ พร้อมบุคลากร จำนวน ๑ ราย โดยมีใบอนุญาตเป็นผู้ให้บริการทดสอบเครื่องจักร ใบอนุญาตเลขที่ ๐๖๐๑-๐๓-๒๕๖๖-๐๑๙๐ เป็นผู้ให้บริการทดสอบปั้นจั่น ใบอนุญาตเลขที่ ๐๖๐๒-๐๓-๒๕๖๖-๐๑๑๒ และเป็นผู้ให้บริการทดสอบหม้อน้ำ ใบอนุญาตเลขที่ ๐๖๐๓-๐๓-๒๕๖๖-๐๑๒๘ รายละเอียดปรากฏตามสิ่งที่ส่งมาด้วย และขอให้บริษัทฯ ปฏิบัติตามกฎกระทรวง การขึ้นทะเบียนและการอนุญาตให้บริการเพื่อส่งเสริมความปลอดภัยฯ อย่างเคร่งครัด ทั้งนี้ กรณีใบอนุญาตประกอบวิชาชีพวิศวกรรมควบคุมของบริษัทฯ หมดอายุ ให้ดำเนินการต่ออายุใบอนุญาตประกอบวิชาชีพวิศวกรรมควบคุม และจัดส่งฉบับสำเนาให้กองความปลอดภัยแรงงาน เพื่อให้สถานภาพการเป็นผู้ให้บริการทดสอบเครื่องจักร ปั้นจั่น และหม้อน้ำ เป็นไปตามที่กฎหมายกำหนด

จึงเรียนมาเพื่อทราบ

ขอแสดงความนับถือ

(นายอิสรา พูนภักดี)
วิศวกรผู้รับรอง
เลขทะเบียน สก.3748

(นายสมพจน์ กวางแก้ว)
รองอธิบดี ปฏิบัติราชการแทน
อธิบดีกรมสวัสดิการและคุ้มครองแรงงาน

กองความปลอดภัยแรงงาน
โทรศัพท์ ๐ ๒๔๔๘ ๙๑๒๘ - ๓๙ ต่อ ๗๐๖
โทรสาร ๐ ๒๔๔๘ ๙๒๔๓

แบบ กภ.บญ
นิติบุคคล

กรมสวัสดิการและคุ้มครองแรงงาน
ใบอนุญาต
เป็นนิติบุคคลผู้ให้บริการทดสอบหม้อน้ำ

ใบอนุญาตเลขที่ ๐๖๐๓-๐๓-๒๕๖๖-๐๑๒๘

อนุญาตให้ บริษัท ไออาร์พี เอ็นจิเนียริ่ง จำกัด

เลขทะเบียนนิติบุคคล ๐๒๐๕๕๕๗๐๐๔๓๗๖

ตั้งอยู่ เลขที่ ๕๒/๘ หมู่ที่ ๒ ตำบลบ้านสวน อำเภอเมืองชลบุรี จังหวัดชลบุรี

เป็นนิติบุคคลผู้ให้บริการด้านความปลอดภัย อาชีวอนามัย และสภาพแวดล้อมในการทำงาน ตามกฎกระทรวงกำหนดมาตรฐานในการบริหาร จัดการ และดำเนินการด้านความปลอดภัย อาชีวอนามัย และสภาพแวดล้อมในการทำงานเกี่ยวกับเครื่องจักร ปั้นจั่น และหม้อน้ำ พ.ศ. ๒๕๖๔ เรื่อง การทดสอบหม้อน้ำ หม้อต้มที่ใช้ของเหลวเป็นสื่อนำความร้อน และภาชนะรับความดัน ทั้งนี้ สามารถดำเนินการได้เฉพาะงานตามประเภทและขนาดตามกฎหมายว่าด้วยวิศวกร ประกอบกับกฎกระทรวงการขึ้นทะเบียน และการอนุญาตให้บริการเพื่อส่งเสริมความปลอดภัย อาชีวอนามัย และสภาพแวดล้อมในการทำงาน พ.ศ. ๒๕๖๔ แห่งพระราชบัญญัติความปลอดภัย อาชีวอนามัย และสภาพแวดล้อมในการทำงาน พ.ศ. ๒๕๕๔ โดยมีบุคลากร จำนวน ๑ ราย ดังรายชื่อแนบท้ายใบอนุญาตนี้

ทั้งนี้ ตั้งแต่วันที่ ๒๐ กุมภาพันธ์ พ.ศ. ๒๕๖๖ ถึงวันที่ ๑๙ กุมภาพันธ์ พ.ศ. ๒๕๖๙

ให้ไว้ ณ วันที่ ๒๐ กุมภาพันธ์ พ.ศ. ๒๕๖๖

(นายสมพจน์ กวางแก้ว)
รองอธิบดี ปฏิบัติราชการแทน
อธิบดีกรมสวัสดิการและคุ้มครองแรงงาน

(นายอิสรา พูนภักดี)
วิศวกรผู้รับรอง
เลขทะเบียน สก.3748

รายชื่อบุคลากรแนบท้ายใบอนุญาต
เป็นนิติบุคคลผู้ให้บริการทดสอบหม้อน้ำ
บริษัท ไออาร์พี เอ็นจิเนียริ่ง จำกัด
ใบอนุญาตเลขที่ ๐๖๐๓-๐๓-๒๕๖๖-๐๑๒๘

๑. นายอิสรา พูนภักดี

ทั้งนี้ ตั้งแต่วันที่ ๒๐ กุมภาพันธ์ พ.ศ. ๒๕๖๖ ถึงวันที่ ๑๙ กุมภาพันธ์ พ.ศ. ๒๕๖๙

ให้ไว้ ณ วันที่ ๒๐ กุมภาพันธ์ พ.ศ. ๒๕๖๖

(นายสมพจน์ กวางแก้ว)
รองอธิบดี ปฏิบัติราชการแทน
อธิบดีกรมสวัสดิการและคุ้มครองแรงงาน

(นายอิสรา พูนภักดี)
วิศวกรผู้รับรอง
เลขทะเบียน สก.3748

ที่ รง ๐๕๐๔/ว ๑๙๙

กองความปลอดภัยแรงงาน
๑๘ ถนนบรมราชชนนี แขวงอิสสรภาพ
เขตตลิ่งชัน กรุงเทพฯ ๑๐๑๗๐

๑๘ มกราคม ๒๕๖๕

เรื่อง การขอขึ้นทะเบียนบุคคลเพื่อเป็นผู้ให้บริการทดสอบเครื่องจักร ปั้นจั่น และหม้อน้ำ

เรียน นายอิสรา พูนภักดี

อ้างถึง แบบคำขอและรับคำขอใบสำคัญฯ

สิ่งที่ส่งมาด้วย ใบสำคัญการขึ้นทะเบียนเป็นผู้ให้บริการทดสอบเครื่องจักร ปั้นจั่น และหม้อน้ำ ลงวันที่ ๑๘ มกราคม พ.ศ. ๒๕๖๕ จำนวน ๓ ฉบับ

ตามหนังสือที่อ้างถึง ท่านได้ยื่นแบบคำขอและรับคำขอใบสำคัญการขึ้นทะเบียนบุคคลตามแบบ กภ.ทบ.๙ (บุคคลธรรมดา) เป็นผู้ให้บริการทดสอบเครื่องจักร ปั้นจั่น และหม้อน้ำ ตามกฎกระทรวงการขึ้นทะเบียนและการอนุญาตให้บริการเพื่อส่งเสริมความปลอดภัย อาชีวอนามัย และสภาพแวดล้อมในการทำงาน พ.ศ. ๒๕๖๔ เพื่อให้กรมสวัสดิการและคุ้มครองแรงงานพิจารณา นั้น

กรมสวัสดิการและคุ้มครองแรงงาน ได้พิจารณาแล้วเห็นว่าการยื่นแบบคำขอและรับคำขอใบสำคัญการขึ้นทะเบียนบุคคลเพื่อเป็นผู้ให้บริการทดสอบเครื่องจักร ปั้นจั่น และหม้อน้ำ ของท่านเป็นไปตามกฎกระทรวงการขึ้นทะเบียนและการอนุญาตให้บริการเพื่อส่งเสริมความปลอดภัยฯ ประกอบกฎกระทรวงกำหนดมาตรฐานในการบริหาร จัดการ และดำเนินการด้านความปลอดภัย อาชีวอนามัย และสภาพแวดล้อมในการทำงานเกี่ยวกับเครื่องจักร ปั้นจั่น และหม้อน้ำ พ.ศ. ๒๕๖๔ จึงออกใบสำคัญการขึ้นทะเบียนให้ท่านเป็นผู้ให้บริการทดสอบเครื่องจักร ปั้นจั่น และหม้อน้ำ โดยมีใบสำคัญเลขที่ ๐๖๐๑-๐๑-๒๕๖๕-๐๑๙๓ ใบสำคัญเลขที่ ๐๖๐๒-๐๑-๒๕๖๕-๐๑๙๓ และใบสำคัญเลขที่ ๐๖๐๓-๐๑-๒๕๖๕-๐๑๙๓ รายละเอียดปรากฏตามเอกสารสิ่งที่ส่งมาด้วย ทั้งนี้ ขอให้ท่านฯ ปฏิบัติตามกฎกระทรวงการขึ้นทะเบียนและการอนุญาตให้บริการเพื่อส่งเสริมความปลอดภัยฯ อย่างเคร่งครัด

จึงเรียนมาเพื่อทราบ

ขอแสดงความนับถือ

(นายอิสรา พูนภักดี)
วิศวกรผู้รับรอง
เลขทะเบียน สก.3748

(นางสาวปรียานันท์ ลิขิตศานต์)
ผู้อำนวยการกองความปลอดภัยแรงงาน

กลุ่มงานทะเบียนความปลอดภัยในการทำงาน
โทรศัพท์ ๐ ๒๔๔๘ ๙๑๒๘ - ๓๙ ต่อ ๗๐๖
โทรสาร ๐ ๒๔๔๘ ๙๑๔๓

แบบ กภ.บค
บุคคลธรรมดา

กรมสวัสดิการและคุ้มครองแรงงาน
ใบสำคัญ
การขึ้นทะเบียนเป็นผู้ให้บริการทดสอบหม้อน้ำ

ใบสำคัญเลขที่ ๐๖๐๓-๐๑-๒๕๖๕-๐๑๙๓

ขึ้นทะเบียนให้ นายอิสรา พูนภักดี
เลขบัตรประจำตัวประชาชน ๓-๙๕๐๕-๐๐๑๒๔-๗๙-๖
ที่อยู่ เลขที่ ๕๒/๘ หมู่ที่ ๒ ตำบลน้ำเงินสวน อำเภอเมืองพิษณุโลก จังหวัดพิษณุโลก
เป็นบุคคลผู้ให้บริการด้านความปลอดภัย อาชีวอนามัย และสภาพแวดล้อมในการทำงานตามกฎกระทรวงกำหนดมาตรฐานในการบริหาร จัดการ และดำเนินการด้านความปลอดภัย อาชีวอนามัย และสภาพแวดล้อมในการทำงานเกี่ยวกับเครื่องจักร ปั้นจั่น และหม้อน้ำ พ.ศ. ๒๕๖๔ ในการเป็นผู้ให้บริการทดสอบหม้อน้ำ หม้อต้มที่ใช้ของเหลวเป็นสื่อนำความร้อน และภาชนะรับความดัน ทั้งนี้ สามารถดำเนินการได้เฉพาะงานตามประเภทและขนาด ตามกฎหมายว่าด้วยวิศวกร ประกอบกับกฎกระทรวงการขึ้นทะเบียน และการอนุญาตให้บริการเพื่อส่งเสริมความปลอดภัย อาชีวอนามัย และสภาพแวดล้อมในการทำงาน พ.ศ. ๒๕๖๔ แห่งพระราชบัญญัติความปลอดภัย อาชีวอนามัย และสภาพแวดล้อมในการทำงาน พ.ศ. ๒๕๕๔

ให้ไว้ ณ วันที่ ๑๔ มกราคม พ.ศ. ๒๕๖๕

(นางสาวปรียานันท์ สิขิตศานต์)
ผู้อำนวยการกองความปลอดภัยแรงงาน

(นายอิสรา พูนภักดี)
วิศวกรผู้รับรอง
เลขทะเบียน สก.3748

Inspection HRSG Boiler Picture Log

Client	: บริษัท อมตะ บี.กริม เพาเวอร์ (ระยอง) 5 จำกัด	**Boiler No.**	: 2 (HRSG 52)
Location	: 7/507 ม6 ต. มาบยางพร อ.ปลวกแดง จ.ระยอง	**Serial**	: 17491-2A
Equipment Name	: HRSG BOILER 52	**Date of Inspection**	: 15 February 2025
Description	: ภาพถ่าย BOILER HRSG		

(นาย อิสรา พูนภักดี)

วิศวกรผู้ตรวจสอบ

เลขทะเบียนใบอนุญาตประกอบวิชาชีพ สก. 3748

วิศวกรตรวจทดสอบหม้อน้ำฯ ทะเบียนเลขที่ 6-65-1195

Inspection HRSG Boiler Picture Log

Client	: บริษัท อมตะ บี.กริม เพาเวอร์ (ระยอง) 5 จำกัด	Boiler No.	: 2 (HRSG 52)
Location	: 7/507 ม6 ต. มาบยางพร อ.ปลวกแดง จ.ระยอง	Serial	: 17491-2A
Equipment Name	: HRSG BOILER 52	Date of Inspection	: 15 February 2025
Description	: ภาพถ่าย Name Plate		

HRSG HP : V17491-2A, HRSG HPEC : V17491-2B, HRSG LPEC : V17491-2C , HRSG LP : V17491-2D

(นาย อิสรา พูนภักดี)

วิศวกรผู้ตรวจสอบ

เลขทะเบียนใบอนุญาตประกอบวิชาชีพ ฉก. 3748

วิศวกรตรวจทดสอบหม้อน้ำฯ ทะเบียนเลขที่ 6-65-1195

Inspection HRSG Boiler Picture Log

Client	: บริษัท อมตะ บี.กริม เพาเวอร์ (ระยอง) 5 จำกัด	Boiler No.	: 2 (HRSG 52)
Location	: 7/507 ม6 ต. มาบยางพร อ.ปลวกแดง จ.ระยอง	Serial	: 17491-2A
Equipment Name	: HRSG BOILER 52	Date of Inspection	: 15 February 2025
Description	: ภาพถ่าย Name Plate	HRSG HP : V17491-2A	

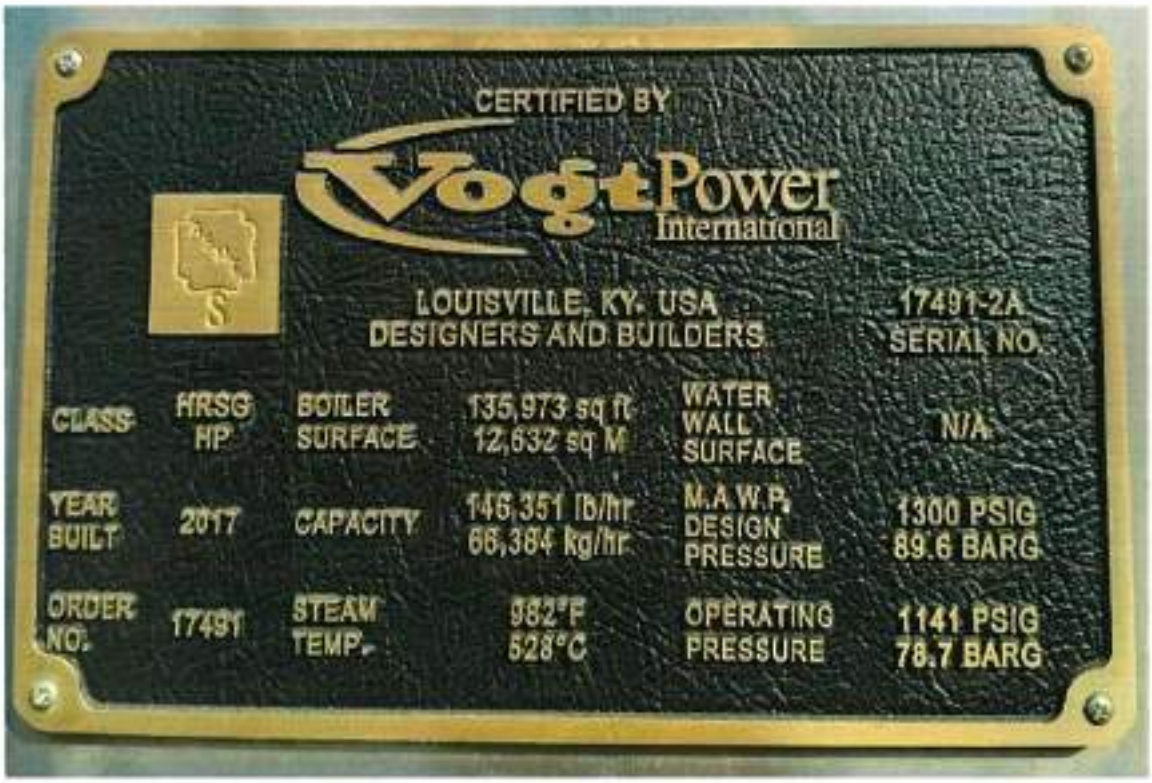

(นาย อิสรา พูนภักดี)

วิศวกรผู้ตรวจสอบ

เลขทะเบียนใบอนุญาตประกอบวิชาชีพ สก. 3748

วิศวกรตรวจทดสอบหม้อน้ำฯ ทะเบียนเลขที่ 6-65-1195

Inspection HRSG Boiler Picture Log

Client	: บริษัท อมตะ บี.กริม เพาเวอร์ (ระยอง) 5 จำกัด	Boiler No.	: 2 (HRSG 52)
Location	: 7/507 ม6 ต. มาบยางพร อ.ปลวกแดง จ.ระยอง	Serial	: 17491-2A
Equipment Name	: HRSG BOILER 52	Date of Inspection	: 15 February 2025
Description	: ภาพถ่าย Name Plate	HRSG HP EC : V17491-2B	

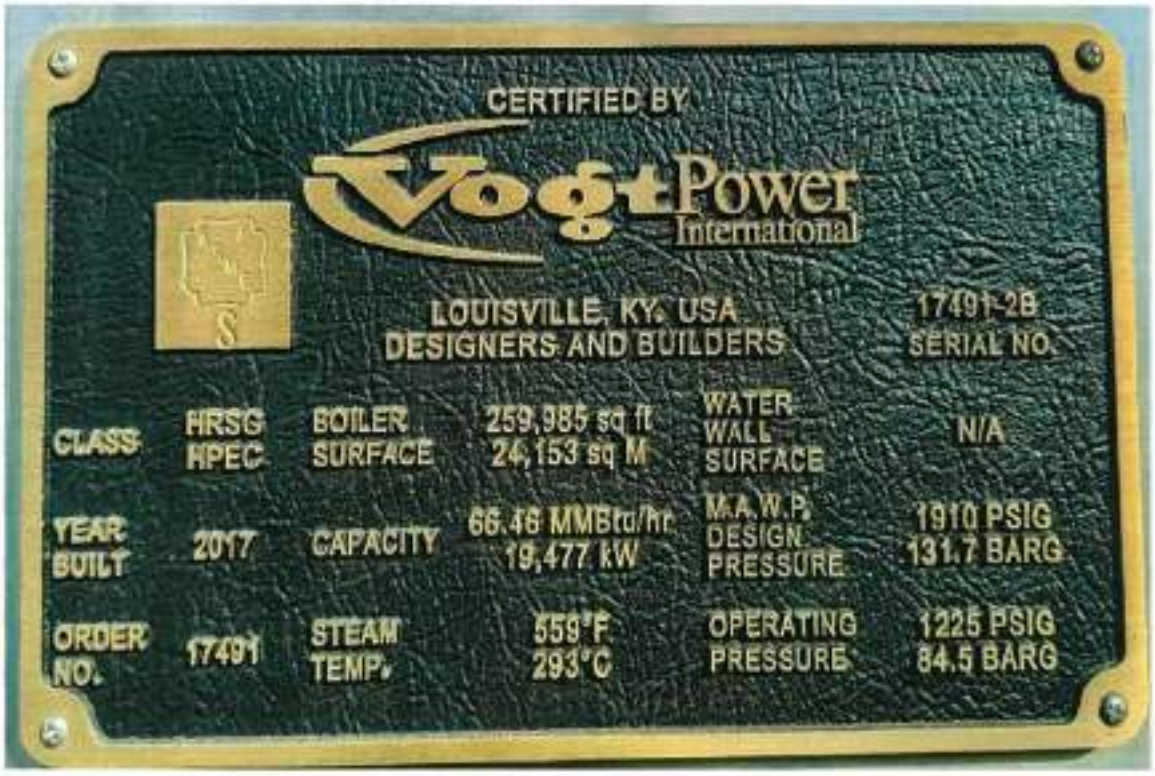

(นาย อิสรา พูนภักดี)

วิศวกรผู้ตรวจสอบ

เลขทะเบียนใบอนุญาตประกอบวิชาชีพ สก. 3748

วิศวกรตรวจทดสอบหม้อน้ำฯ ทะเบียนเลขที่ 6-65-1195

Inspection HRSG Boiler Picture Log

Client	: บริษัท อมตะ บี.กริม เพาเวอร์ (ระยอง) 5 จำกัด	Boiler No.	: 2 (HRSG 52)
Location	: 7/507 มอ 6 ต. มาบยางพร อ.ปลวกแดง จ.ระยอง	Serial	: 17491-2A
Equipment Name	: HRSG BOILER 52	Date of Inspection	: 15 February 2025
Description	: ภาพถ่าย Name Plate	HRSG LP : V17491-2C	

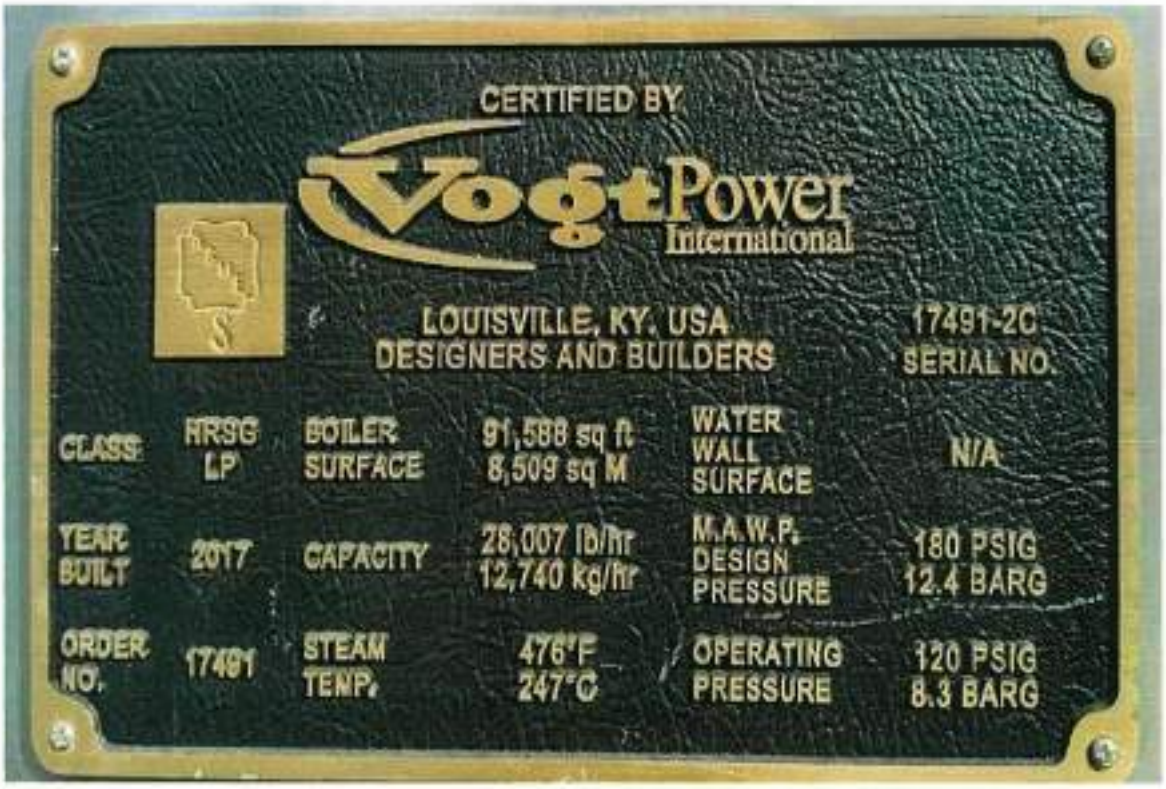

(นาย อิสรา พูนภักดี)

วิศวกรผู้ตรวจสอบ

เลขทะเบียนใบอนุญาตประกอบวิชาชีพ สก. 3748

วิศวกรตรวจทดสอบหม้อน้ำฯ ทะเบียนเลขที่ 6-65-1195

Inspection HRSG Boiler Picture Log

Client	: บริษัท อมตะ บี.กริม เพาเวอร์ (ระยอง) 5 จำกัด	Boiler No.	: 2 (HRSG 52)
Location	: 7/507 ม6 ต. มาบยางพร อ.ปลวกแดง จ.ระยอง	Serial	: 17491-2A
Equipment Name	: HRSG BOILER 52	Date of Inspection	: 15 February 2025
Description	: ภาพถ่าย Name Plate	HRSG LP EC : V17491-2D	

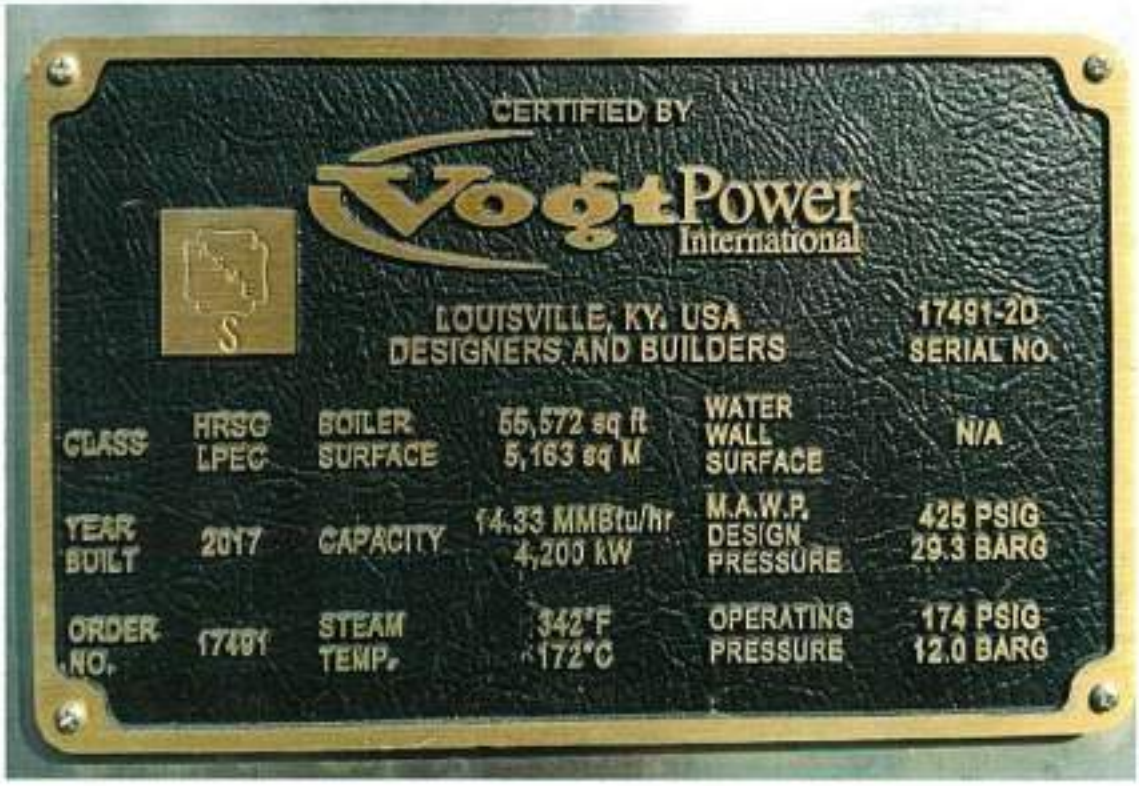

(นาย ธิตวา พูนภักดี)

วิศวกรผู้ตรวจสอบ

เลขทะเบียนใบอนุญาตประกอบวิชาชีพ สก. 3748

วิศวกรตรวจทดสอบหม้อน้ำฯ ทะเบียนเลขที่ 6-65-1195

Inspection HRSG Boiler Picture Log

Client	: บริษัท อมตะ บี.กริม เพาเวอร์ (ระยอง) 5 จำกัด	**Boiler No.**	: 2 (HRSG 52)
Location	: 7/507 หมู่ 6 ต. มาบยางพร อ.ปลวกแดง จ.ระยอง	**Serial**	: 17491-2A
Equipment Name	: HRSG BOILER 52	**Date of Inspection**	: 15 February 2025
Description	: ภาพถ่ายวิศวกรตรวจสอบพร้อมผู้ควบคุมหม้อไอน้ำ	**HYDROSTATIC TEST**	: LP DRUM + SH

ภาพถ่ายวิศวกรตรวจสอบพร้อมผู้ควบคุมหม้อไอน้ำ

Name Plate LP Loop Hydrostatic Pressure Test

LP Loop Hydrostatic Pressure Test

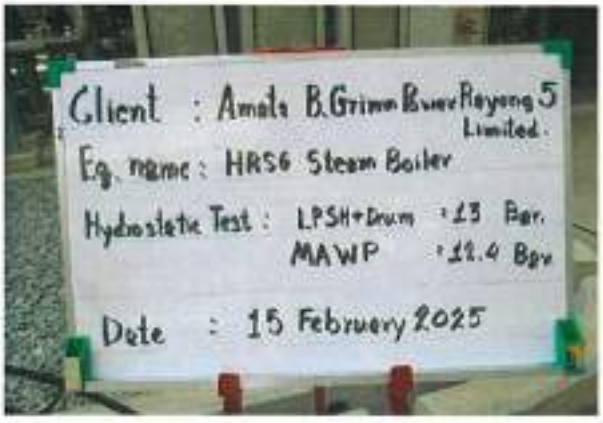

ข้อมูลตรวจทดสอบ

(นาย อิสรา ทุนภักดี)

วิศวกรผู้ตรวจสอบ

เลขทะเบียนใบอนุญาตประกอบวิชาชีพ สก. 3748

วิศวกรตรวจทดสอบหม้อน้ำฯ ทะเบียนเลขที่ 6-65-1195

Inspection HRSG Boiler Picture Log

Client	: บริษัท อมตะ บี.กริม เพาเวอร์ (ระยอง) 5 จำกัด	**Boiler No.**	: 2 (HRSG 52)
Location	: 7/507 ม6 ต. มาบยางพร อ.ปลวกแดง จ.ระยอง	**Serial**	: 17491-2A
Equipment Name	: HRSG BOILER 52	**Date of Inspection**	: 15 February 2025
Description	: ภาพถ่ายวิศวกรตรวจสอบพร้อมผู้ควบคุมหม้อไอน้ำ	**HYDROSTATIC TEST**	: HP DRUM + SH

ภาพถ่ายวิศวกรตรวจสอบพร้อมผู้ควบคุมหม้อไอน้ำ

Name Plate HP Loop Hydrostatic Pressure Test

HP Loop Hydrostatic Pressure Test

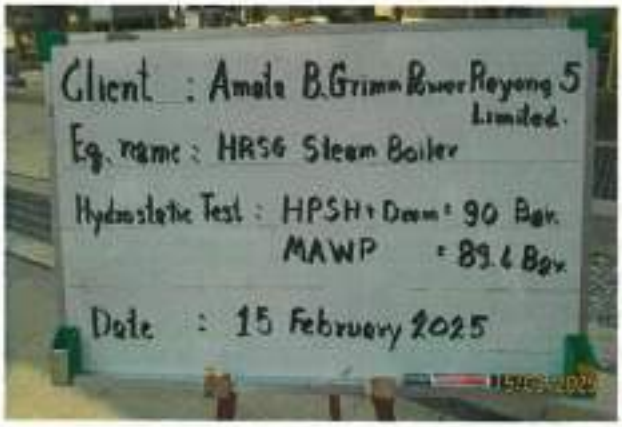

ข้อมูลตรวจทดสอบ

(นาย อิสรา หูนภักดี)

วิศวกรผู้ตรวจสอบ

เลขทะเบียนใบอนุญาตประกอบวิชาชีพ สก. 3748

วิศวกรตรวจทดสอบหม้อน้ำฯ ทะเบียนเลขที่ 6-65-1195

Inspection HRSG Boiler Picture Log

Client	: บริษัท อมตะ บี.กริม เพาเวอร์ (ระยอง) 5 จำกัด	**Boiler No.**	: 2 (HRSG 52)
Location	: 7/507 ม6 ต. มาบยางพร อ.ปลวกแดง จ.ระยอง	**Serial**	: 17491-2A
Equipment Name	: HRSG BOILER 52	**Date of Inspection**	: 15 February 2025
Description	: ภาพถ่ายวิศวกรตรวจสอบพร้อมผู้ควบคุมหม้อไอน้ำ	**HYDROSTATIC TEST**	: LP ECO

ภาพถ่ายวิศวกรตรวจสอบพร้อมผู้ควบคุมหม้อไอน้ำ

HP ECO Loop Hydrostatic Pressure Test

Name Plate HP ECO Loop Hydrostatic Pressure Test

HP ECO Loop Hydrostatic Pressure Test

(นาย อิสรา พูนภักดี)

วิศวกรผู้ตรวจสอบ

เลขทะเบียนใบอนุญาตประกอบวิชาชีพ สก. 3748

วิศวกรตรวจทดสอบหม้อน้ำฯ ทะเบียนเลขที่ 6-65-1195

Inspection HRSG Boiler Picture Log

Client	: บริษัท อมตะ บี.กริม เพาเวอร์ (ระยอง) 5 จำกัด	**Boiler No.**	: 2 (HRSG 52)
Location	: 7/507 ม.6 ต. มาบยางพร อ.ปลวกแดง จ.ระยอง	**Serial**	: 17491-2A
Equipment Name	: HRSG BOILER 52	**Date of Inspection**	: 15 February 2025
Description	: ภาพถ่ายวิศวกรตรวจสอบพร้อมผู้ควบคุมหม้อไอน้ำ	**HYDROSTATIC TEST**	: HP Economizer

ภาพถ่ายวิศวกรตรวจสอบพร้อมผู้ควบคุมหม้อไอน้ำ

HP Loop Hydrostatic Pressure Test

HP Loop Hydrostatic Pressure Test

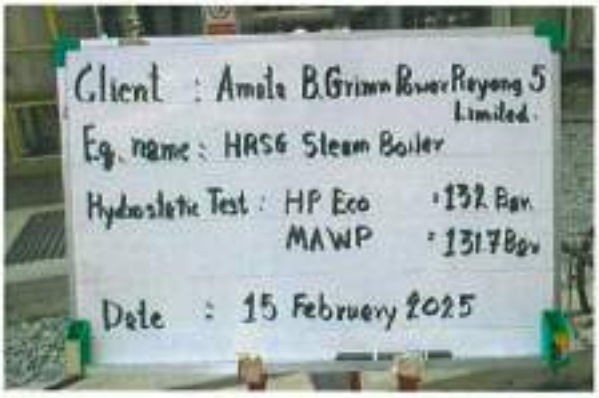

ข้อมูลตรวจทดสอบ

(นาย อิสรา ทูนภักดี)

วิศวกรผู้ตรวจสอบ

เลขทะเบียนใบอนุญาตประกอบวิชาชีพ สก. 3748

วิศวกรตรวจทดสอบหม้อน้ำฯ ทะเบียนเลขที่ 6-65-1195

Inspection HRSG Boiler Picture Log

Client	: บริษัท อมตะ บี.กริม เพาเวอร์ (ระยอง) 5 จำกัด	Boiler No.	: 2 (HRSG 52)
Location	: 7/507 หมู่ ต. มาบยางพร อ.ปลวกแดง จ.ระยอง	Serial	: 17491-2A
Equipment Name	: HRSG BOILER 52	Date of Inspection	: 15 February 2025
Description	: ภาพถ่ายตรวจสอบภายนอก		

ภาพถ่ายตรวจสอบภายนอก

(นาย อิสรา พูนภักดี)

วิศวกรผู้ตรวจสอบ

เลขทะเบียนใบอนุญาตประกอบวิชาชีพ สก. 3748

วิศวกรตรวจทดสอบหม้อน้ำฯ ทะเบียนเลขที่ 6-65-1195

Inspection HRSG Boiler Picture Log

Client	: บริษัท อมตะ บี.กริม เพาเวอร์ (ระยอง) 5 จำกัด	**Boiler No.**	: 2 (HRSG 52)
Location	: 7/507 ม6 ต. มาบยางพร อ.ปลวกแดง จ.ระยอง	**Serial**	: 17491-2A
Equipment Name	: HRSG BOILER 52	**Date of Inspection**	: 5-15 February 2025
Description	: ภาพถ่าย LP Drum		

ภาพถ่ายภายนอก LP Drum

(นาย อิสรา พูนภักดี)

วิศวกรผู้ตรวจสอบ

เลขทะเบียนใบอนุญาตประกอบวิชาชีพ สก. 3748

วิศวกรตรวจทดสอบหม้อน้ำฯ ทะเบียนเลขที่ 6-65-1195

Inspection HRSG Boiler Picture Log

Client	: บริษัท อมตะ บี.กริม เพาเวอร์ (ระยอง) 5 จำกัด	Boiler No.	: 2 (HRSG 52)
Location	: 7/507 ม6 ต. มาบยางพร อ.ปลวกแดง จ.ระยอง	Serial	: 17491-2A
Equipment Name	: HRSG BOILER 52	Date of Inspection	: 5-15 February 2025
Description	: ภาพถ่ายด้านสัมผัสน้ำ LP Drum		

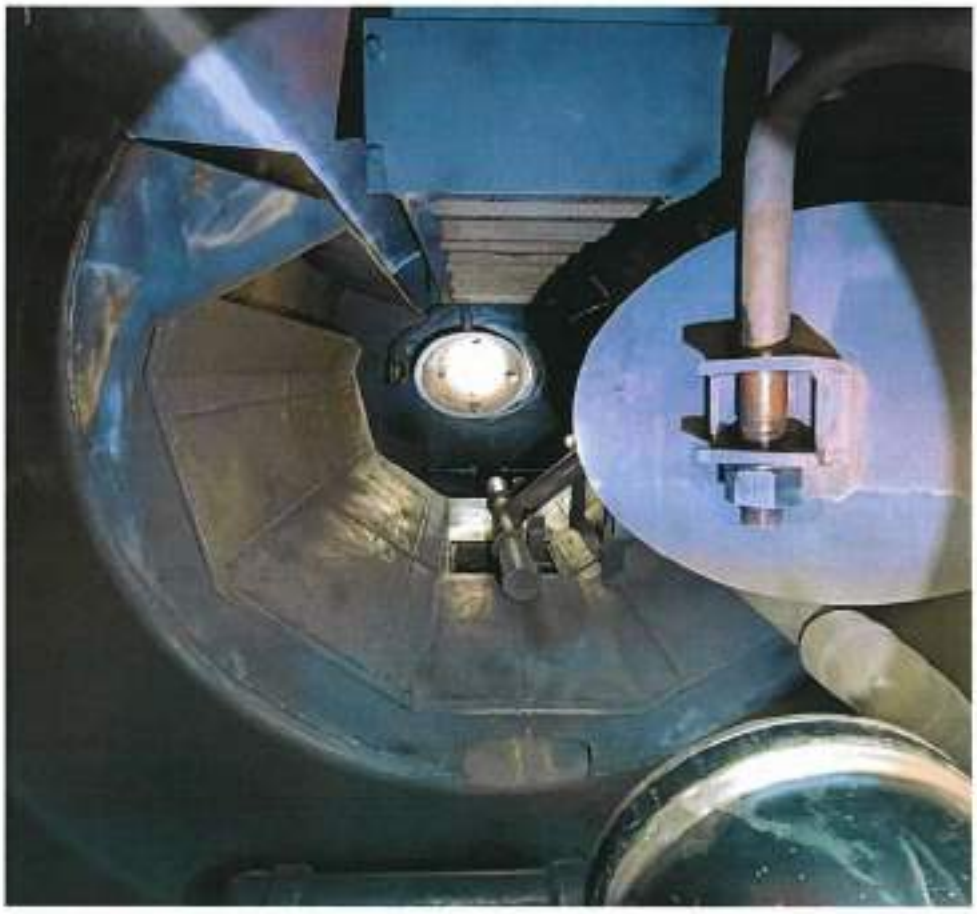

ภาพถ่ายภายใน LP Drum

(นาย อิสรา พูนภักดี)

วิศวกรผู้ตรวจสอบ

เลขทะเบียนใบอนุญาตประกอบวิชาชีพ สก. 3748

วิศวกรตรวจทดสอบหม้อน้ำฯ ทะเบียนเลขที่ 6-65-1195

Inspection HRSG Boiler Picture Log

Client	: บริษัท อมตะ บี.กริม เพาเวอร์ (ระยอง) 5 จำกัด	**Boiler No.**	: 2 (HRSG 52)
Location	: 7/507 ม6 ต. มาบยางพร อ.ปลวกแดง จ.ระยอง	**Serial**	: 17491-2A
Equipment Name	: HRSG BOILER 52	**Date of Inspection**	: 5-15 February 2025
Description	: ภาพถ่ายด้านสัมผัสน้ำ LP Drum		

Thickness by UTM Inspection

วิศวกรตรวจสอบแนวเชื่อมหลังทำ MT

Inspection scale

ตรวจสอบรอยเชื่อม NDT by MT

(นาย อิสรา พูนภักดี)

วิศวกรผู้ตรวจสอบ

เลขทะเบียนใบอนุญาตประกอบวิชาชีพ สก. 3748

วิศวกรตรวจทดสอบหม้อน้ำฯ ทะเบียนเลขที่ 6-65-1195

Inspection HRSG Boiler Picture Log

Client	: บริษัท อมตะ บี.กริม เพาเวอร์ (ระยอง) 5 จำกัด	**Boiler No.**	: 2 (HRSG 52)
Location	: 7/507 ม6 ต. มาบยางพร อ.ปลวกแดง จ.ระยอง	**Serial**	: 17491-2A
Equipment Name	: HRSG BOILER 52	**Date of Inspection**	: 5-15 February 2025
Description	: ภาพถ่าย HP Drum		

ภาพถ่ายภายนอก HP Drum

(นาย อิสรา พูนภักดี)

วิศวกรผู้ตรวจสอบ

เลขทะเบียนใบอนุญาตประกอบวิชาชีพ สก. 3748

วิศวกรตรวจทดสอบหม้อน้ำฯ ทะเบียนเลขที่ 6-65-1195

Inspection HRSG Boiler Picture Log

Client	: บริษัท อมตะ บี.กริม เพาเวอร์ (ระยอง) 5 จำกัด	**Boiler No.**	: 2 (HRSG 52)
Location	: 7/507 ม6 ต.มาบยางพร อ.ปลวกแดง จ.ระยอง	**Serial**	: 17491-2A
Equipment Name	: HRSG BOILER 52	**Date of Inspection**	: 5-15 February 2025
Description	: ภาพถ่ายด้านสัมผัสน้ำ HP Drum		

ภาพถ่ายภายใน HP Drum

(นายอิสรา หูนภักดี)

วิศวกรผู้ตรวจสอบ

เลขทะเบียนใบอนุญาตประกอบวิชาชีพ สก. 3748

วิศวกรตรวจทดสอบหม้อน้ำฯ ทะเบียนเลขที่ 6-65-1195

Inspection HRSG Boiler Picture Log

Client	: บริษัท อมตะ บี.กริม เพาเวอร์ (ระยอง) 5 จำกัด	Boiler No.	: 2 (HRSG 52)
Location	: 7/507 ม6 ต. มาบยางพร อ.ปลวกแดง จ.ระยอง	Serial	: 17491-2A
Equipment Name :	HRSG BOILER 52	Date of Inspection	: 5-15 February 2025
Description	: ภาพถ่ายด้านสัมผัสน้ำ HP Drum		

Thickness by UTM Inspection

วิศวกรตรวจสอบแนวเชื่อมหลังทำ MT

Inspection scale

ตรวจสอบรอยเชื่อม NDT by MT

(นายอิสรา พูนภักดี)

วิศวกรผู้ตรวจสอบ

เลขทะเบียนใบอนุญาตประกอบวิชาชีพ สก. 3748

วิศวกรตรวจทดสอบหม้อน้ำฯ ทะเบียนเลขที่ 6-65-1195

Inspection HRSG Boiler Picture Log

Client	: บริษัท อมตะ บี.กริม เพาเวอร์ (ระยอง) 5 จำกัด	Boiler No.	: 2 (HRSG 52)
Location	: 7/507 ม6 ต. มาบยางพร อ.ปลวกแดง จ.ระยอง	Serial	: 17491-2A
Equipment Name	: HRSG BOILER 52	Date of Inspection	11 February 2025
Description	: ภาพถ่าย Feed Water Tank & Deaerator Drum		

ภาพถ่ายภายนอก Feed Water Tank & Deaerator Drum

(นาย อิสรา พูนภักดี)

วิศวกรผู้ตรวจสอบ

เลขทะเบียนใบอนุญาตประกอบวิชาชีพ สก. 3748

วิศวกรตรวจทดสอบหม้อน้ำฯ ทะเบียนเลขที่ 6-65-1195

Inspection HRSG Boiler Picture Log

Client	: บริษัท อมตะ บี.กริม เพาเวอร์ (ระยอง) 5 จำกัด	Boiler No.	: 2 (HRSG 52)
Location	: 7/507 ม.6 ต. มาบยางพร อ.ปลวกแดง จ.ระยอง	Serial	: 17491-2A
Equipment Name	: HRSG BOILER 52	Date of Inspection	: 11 February 2025
Description	: ภาพถ่ายด้านสัมผัสน้ำ Deaerator Drum		

Thickness by UTM Inspection

Thickness by UTM Inspection

Inspection scale

(นาย อิสรา หูนภักดี)

วิศวกรผู้ตรวจสอบ

เลขทะเบียนใบอนุญาตประกอบวิชาชีพ สก. 3748

วิศวกรตรวจทดสอบหม้อน้ำฯ ทะเบียนเลขที่ 6-65-1195

Inspection HRSG Boiler Picture Log

Client	: บริษัท อมตะ บี.กริม เพาเวอร์ (ระยอง) 5 จำกัด	Boiler No.	: 2 (HRSG 52)
Location	: 7/507 ม.6 ต. มาบยางพร อ.ปลวกแดง จ.ระยอง	Serial	: 17491-2A
Equipment Name	: HRSG BOILER 52	Date of Inspection	: 11 February 2025
Description	: ภาพถ่าย Feed Water Tank & Deaerator Drum		

ภาพถ่ายภายใน Deaerator Drum

(นาย อิสรา หูนภักดี)

วิศวกรผู้ตรวจสอบ

เลขทะเบียนใบอนุญาตประกอบวิชาชีพ สก. 3748

วิศวกรตรวจทดสอบหม้อน้ำฯ ทะเบียนเลขที่ 6-65-1195

Inspection HRSG Boiler Picture Log

Client	: บริษัท อมตะ บี.กริม เพาเวอร์ (ระยอง) 5 จำกัด	Boiler No.	: 2 (HRSG 52)
Location	: 7/507 ม6 ต. มาบยางพร อ.ปลวกแดง จ.ระยอง	Serial	: 17491-2A
Equipment Name	: HRSG BOILER 52	Date of Inspection	: 11 February 2025
Description	: ภาพถ่าย Feed Water Tank		

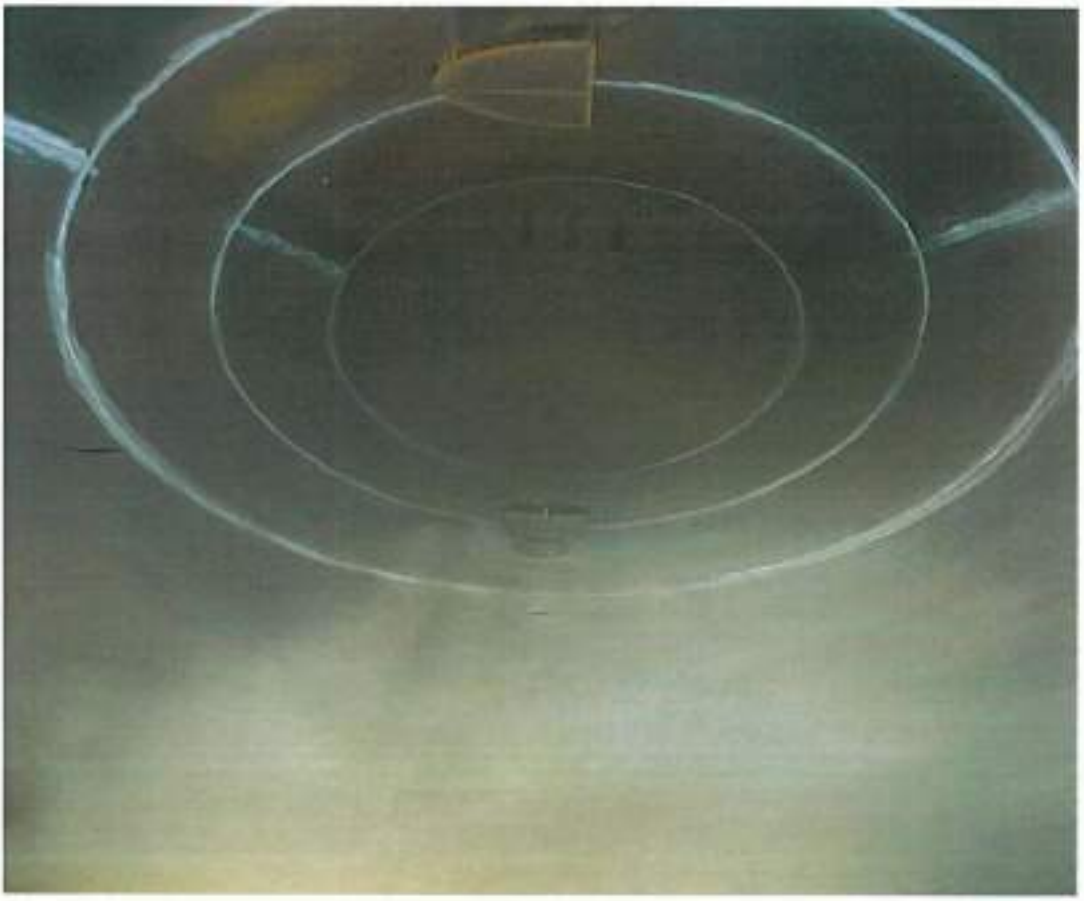

ภาพถ่ายภายใน Feed Water Tank

(นาย อิสรา หุนภักดี)

วิศวกรผู้ตรวจสอบ

เลขทะเบียนใบอนุญาตประกอบวิชาชีพ สก. 3748

วิศวกรตรวจทดสอบหม้อน้ำฯ ทะเบียนเลขที่ 6-65-1195

Inspection HRSG Boiler Picture Log

Client	: บริษัท อมตะ บี.กริม เพาเวอร์ (ระยอง) 5 จำกัด	Boiler No.	: 2 (HRSG 52)
Location	: 7/507 หมู่ ต. มาบยางพร อ.ปลวกแดง จ.ระยอง	Serial	: 17491-2A
Equipment Name	: HRSG BOILER 52	Date of Inspection	: 11 February 2025
Description	: ภาพถ่ายด้านสัมผัสน้ำ		

Thickness by UTM Inspection

MT Inspection

วิศวกรตรวจสอบแนวเชื่อมหลังทำ MT

Inspection scale

(นาย ลิฮรา พูนภักดี)

วิศวกรผู้ตรวจสอบ

เลขทะเบียนใบอนุญาตประกอบวิชาชีพ ฮก. 3748

วิศวกรตรวจทดสอบหม้อน้ำฯ ทะเบียนเลขที่ 6-65-1195

Inspection HRSG Boiler Picture Log

Client	: บริษัท อมตะ บี.กริม เพนวอร์ (ระยอง) 5 จำกัด	Boiler No.	: 2 (HRSG 52)
Location	: 7/507 หมู่ ๓. มาบยางพร อ.ปลวกแดง จ.ระยอง	Serial	: 17491-2A
Equipment Name	: HRSG BOILER 52	Date of Inspection	: 7 February 2025
Description	: ภาพถ่ายด้านสัมผัสไฟ		

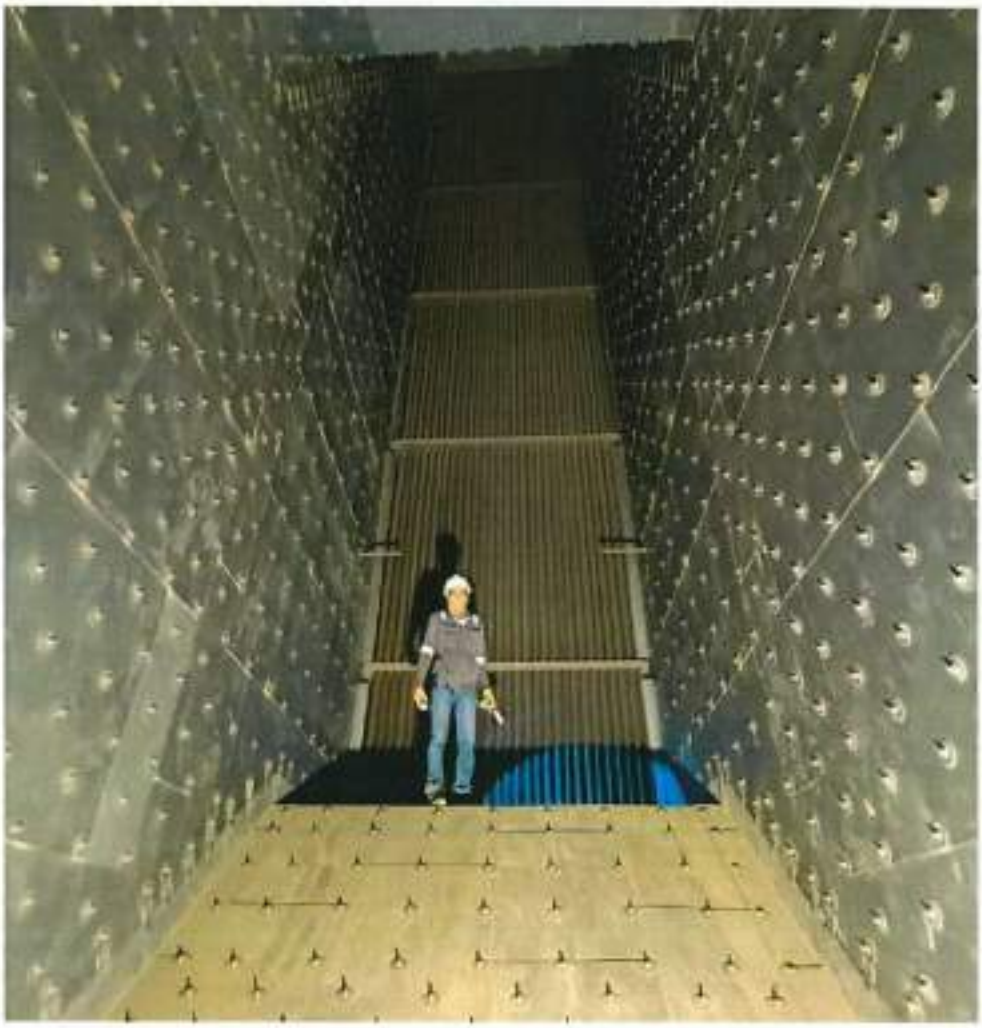

Inspection Finned Tube HP Super heat

(นาย อิสรา หูนภักดี)

วิศวกรผู้ตรวจสอบ

เลขทะเบียนใบอนุญาตประกอบวิชาชีพ สก. 3748

วิศวกรตรวจทดสอบหม้อน้ำฯ ทะเบียนเลขที่ 6-65-1195

Inspection HRSG Boiler Picture Log

Client	: บริษัท อมตะ บี.กริม เพาเวอร์ (ระยอง) 5 จำกัด	Boiler No.	: 2 (HRSG 52)
Location	: 7/507 ม6 ต. มาบยางพร อ.ปลวกแดง จ.ระยอง	Serial	: 17491-2A
Equipment Name	: HRSG BOILER 52	Date of Inspection	: 15 February 2025
Description	: ภาพถ่ายด้านสัมผัสไฟ HP Superheat		

Inspection Aux Header

Inspection joint welding Header

Inspection Aux Header

Inspection HPSH drain

(นาย อิสรา พูนภักดี)

วิศวกรผู้ตรวจสอบ

เลขทะเบียนใบอนุญาตประกอบวิชาชีพ สก. 3748

วิศวกรตรวจทดสอบหม้อน้ำฯ ทะเบียนเลขที่ 6-65-1195

Inspection HRSG Boiler Picture Log

Client	: บริษัท อมตะ บี.กริม เพาเวอร์ (ระยอง) 5 จำกัด	Boiler No.	: 2 (HRSG 52)
Location	: 7/507 ม6 ต. มาบยางพร อ.ปลวกแดง จ.ระยอง	Serial	: 17491-2A
Equipment Name	: HRSG BOILER 52	Date of Inspection	: 15 February 2025
Description	: ภาพถ่ายด้านสัมผัสไฟ HP Evaporator		

Tube HP Evaporator

Finned Tube HP Evaporator

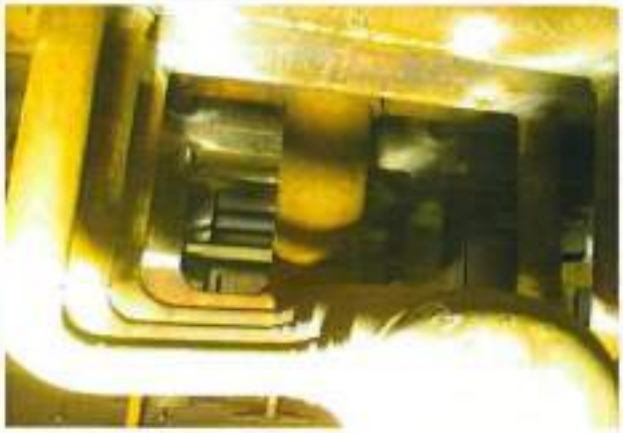

Inspection Header Evaporator Tube

Inspection Tube and Header

(นาย อิสรา พูนภักดี)

วิศวกรผู้ตรวจสอบ

เลขทะเบียนใบอนุญาตประกอบวิชาชีพ สก. 3748

วิศวกรตรวจทดสอบหม้อน้ำฯ ทะเบียนเลขที่ 6-65-1195

Inspection HRSG Boiler Picture Log

Client	: บริษัท อมตะ บี.กริม เพาเวอร์ (ระยอง) 5 จำกัด	Boiler No.	: 2 (HRSG 52)
Location	: 7/507 หมู่ 6 ต. มาบยางพร อ.ปลวกแดง จ.ระยอง	Serial	: 17491-2A
Equipment Name	: HRSG BOILER 52	Date of Inspection	: 15 February 2025
Description	: ภาพถ่ายด้านสัมผัสไฟ HP Economizer		

HP Economizer

Inspection Finned Tube

Drain pipe HP Economizer

Inspection Tube and Header

(นาย อิสรา หูมภักดี)

วิศวกรผู้ตรวจสอบ

เลขทะเบียนใบอนุญาตประกอบวิชาชีพ สก. 3748

วิศวกรตรวจทดสอบหม้อน้ำฯ ทะเบียนเลขที่ 6-65-1195

Inspection HRSG Boiler Picture Log

Client	: บริษัท อมตะ บี.กริม เพาเวอร์ (ระยอง) 5 จำกัด	**Boiler No.**	: 2 (HRSG 52)
Location	: 7/507 ม6 ต. มาบยางพร อ.ปลวกแดง จ.ระยอง	**Serial**	: 17491-2A
Equipment Name	: HRSG BOILER 52	**Date of Inspection**	: 15 February 2025
Description	: ภาพถ่ายด้านสัมผัสไฟ		

HP Economizer Finned Tube

(นาย อิสรา พูนภักดี)

วิศวกรผู้ตรวจสอบ

เลขทะเบียนใบอนุญาตประกอบวิชาชีพ สก. 3748

วิศวกรตรวจทดสอบหม้อน้ำฯ ทะเบียนเลขที่ 6-65-1195

Inspection HRSG Boiler Picture Log

Client	: บริษัท อมตะ บี.กริม เพาเวอร์ (ระยอง) 5 จำกัด	Boiler No.	: 2 (HRSG 52)
Location	: 7/507 หมู่ 6 ต. มาบยางพร อ.ปลวกแดง จ.ระยอง	Serial	: 17491-2A
Equipment Name	: HRSG BOILER 52	Date of Inspection	: 15 February 2025
Description	: ภาพถ่ายด้านสัมผัสไฟ		

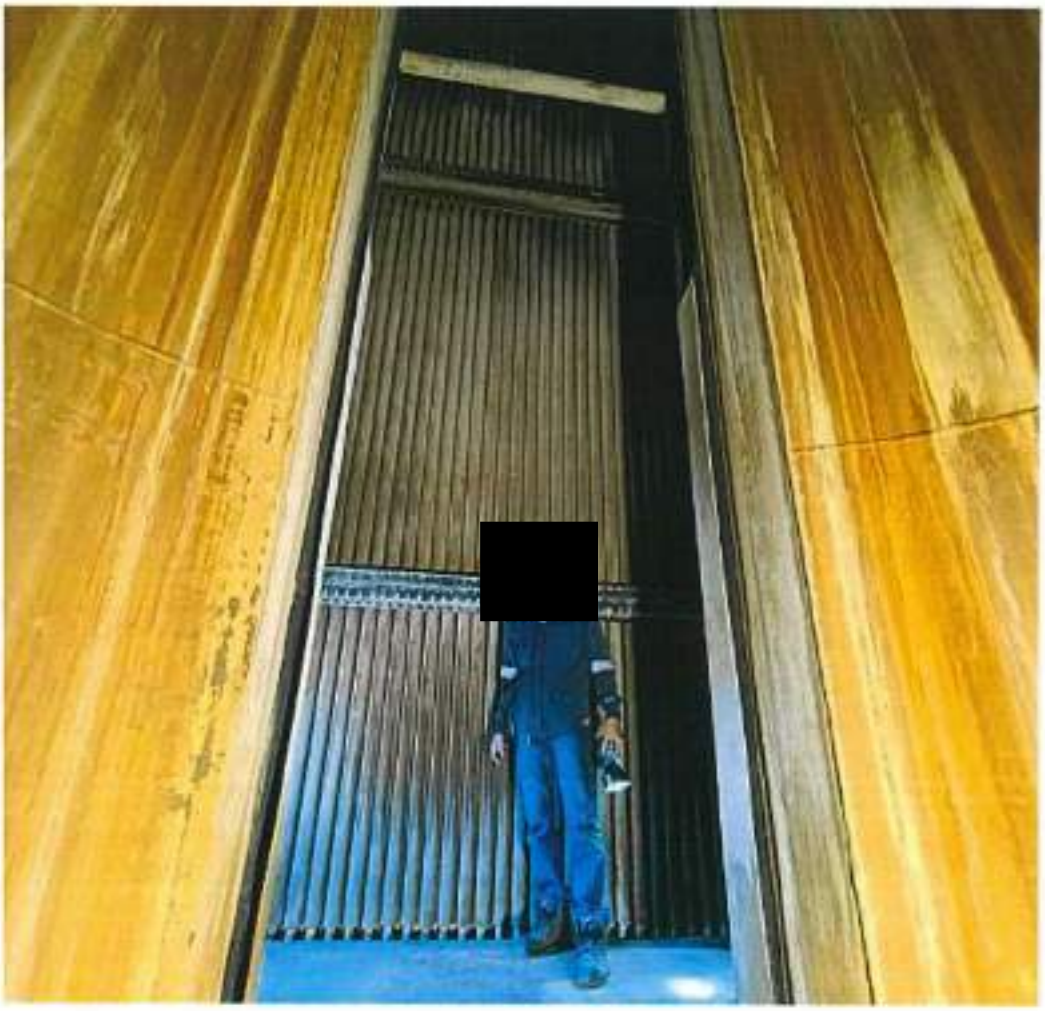

Inspection Tube

(นาย อิสรา หูนภักดี)

วิศวกรผู้ตรวจสอบ

เลขทะเบียนใบอนุญาตประกอบวิชาชีพ สก. 3748

วิศวกรตรวจทดสอบหม้อน้ำฯ ทะเบียนเลขที่ 6-65-1195

Inspection HRSG Boiler Picture Log

Client	: บริษัท อมตะ บี.กริม เพาเวอร์ (ระยอง) 5 จำกัด	Boiler No.	: 2 (HRSG 52)
Location	: 7/507 ม6 ต. มาบยางพร อ.ปลวกแดง จ.ระยอง	Serial	: 17491-2A
Equipment Name	: HRSG BOILER 52	Date of Inspection	: 15 February 2025
Description	: ภาพถ่ายด้านล้มผัลไฟ		

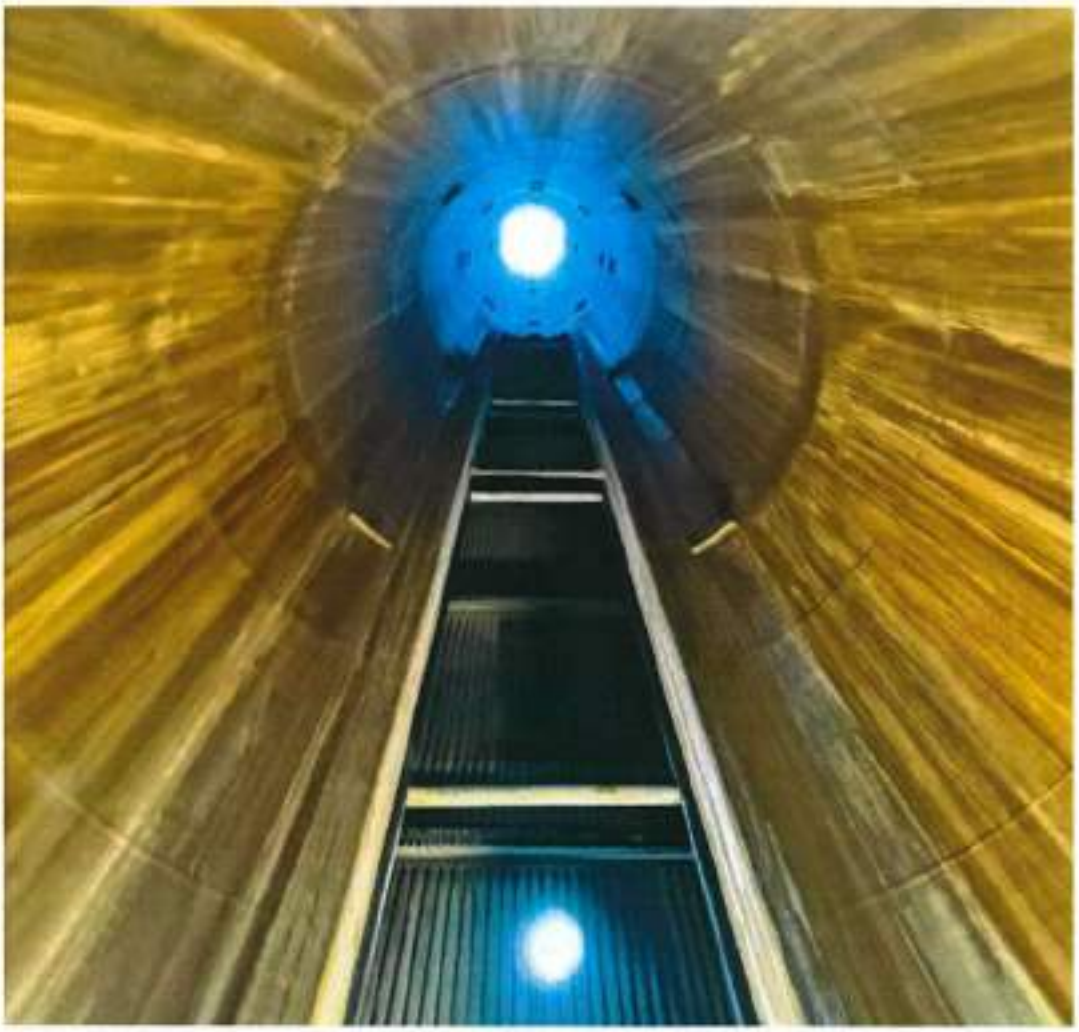

Stack

(นาย อิสรา พูนภักดี)

วิศวกรผู้ตรวจสอบ

เลขทะเบียนใบอนุญาตประกอบวิชาชีพ ฉก. 3748

วิศวกรตรวจทดสอบหม้อน้ำฯ ทะเบียนเลขที่ 6-65-1195

ภาคผนวก ข.45

เอกสารผู้ควบคุมหม้อไอน้ำ

ทะเบียนพนักงานที่ได้รับการขึ้นทะเบียน " วิศวกร/ผู้ควบคุมประจำหม้อน้ำ"

*** บัตรมีอายุ 5 ปี ต่อตามสูตรใบ

ITEM	POSITION	Name-Surname	ID NO.	Issue date	Expiration date	REMARK
AIRPRS						
วิศวกรควบคุมและดำนวยการใช้						
1		นายสวงเพ ชัยกิจวิริยำยุ	5-314-778-971	27 เมษายน 2565	31 ธันวาคม 2569	
ผู้ควบคุมประจำหม้อน้ำ						
Operation						
2	OSM - A	นายสมบุญ จำเกุล	314-778-38339	26 ธันวาคม 2565	31 ธันวาคม 2569	
3	OSM - B	นายธรรกพงษ์ ชื่อบาก	314-778-27393	26 ธันวาคม 2565	31 ธันวาคม 2569	
4	OSM - C	นายสวงเพ สาดเกิง	314-778-54689	26 ธันวาคม 2565	31 ธันวาคม 2569	
5	OSM - D	นายสาวิช บันเพไพล	314-778-42249	26 ธันวาคม 2565	31 ธันวาคม 2569	
6	CBO - B	นายธีรสิทธิ์ ขายดี	314-778-35300	26 ธันวาคม 2565	31 ธันวาคม 2569	
7	CBO - D	นายวิโลจน์ ปลาทอง	314-778-26941	26 ธันวาคม 2565	31 ธันวาคม 2569	
8	CBO - A	นายกาลี เปรมานนท์	311-247-41871	23 ธันวาคม 2564	31 ธันวาคม 2568	
9	CBO - C	นายสิทธิกรณ์ เพลงลาน	314-778-50074	23 ธันวาคม 2564	31 ธันวาคม 2568	
10	PO - A	นายสุพลกาญ บุรพลสมกล	314-778-50075	23 ธันวาคม 2564	31 ธันวาคม 2568	
11	PO - C	นายกฤษณ์ กลมเก้า	314-778-50076	23 ธันวาคม 2564	31 ธันวาคม 2568	
12	PO - E	นายกานต์ดนาถ์ บุ่นนวล	314-778-50072	23 ธันวาคม 2564	31 ธันวาคม 2568	
13	PO - D	นายกำชร รุ่งจำรัส	314-778-50317	21 มีนาคม 2565	31 ธันวาคม 2569	
14	PO - B	นายสิทธา จีดนลำราง	314-778-50318	21 มีนาคม 2565	31 ธันวาคม 2569	
15	PO - A	นายอาทิตย์ พลนาค	314-778-51228	26 ธันวาคม 2565	31 ธันวาคม 2569	
16	PO - B	นายพัฒ สีรุ่งนาวาร์ดน์	314-778-51226	26 ธันวาคม 2565	31 ธันวาคม 2569	
17	PO - D	นายวิศณุ หะสุน	314-778-51227	26 ธันวาคม 2565	31 ธันวาคม 2569	
Maintenance						
18	OSM	นายชัชชัย ดูจริง	314-778-38808	26 ธันวาคม 2565	31 ธันวาคม 2569	
19	MS	นายวิรุฬห์ เกิดสุข	314-778-41637	26 ธันวาคม 2565	31 ธันวาคม 2569	
20	ME	นายบุลิรัช ชีติกะ	314-778-50073	23 ธันวาคม 2564	31 ธันวาคม 2568	

สำนักเทคโนโลยีความปลอดภัย

รับที่ 02261/2568

ชื่อโรงงาน บริษัท อมตะ บี.กริม เพาเวอร์ (ระยอง) 5จำกัด รหัสที่ 111-314-000778

เลขที่ตั้ง 7/507 นิคมฯอมตะซิตี้ หมู่ 6 ซอย ถนน

ตำบล มาบยางพร อำเภอ ปลวกแดง จังหวัด ระยอง

ได้ยื่นเอกสารดังรายการต่อไปนี้ต่อ สำนักเทคโนโลยีความปลอดภัย เมื่อวันที่ 13 พฤษภาคม 2568

ตรวจทดสอบหม้อไอน้ำ หมายเลข 1.2 จำนวน 2 รายการ

ตรวจทดสอบโดย 6-65-001195 นายอิศรา พูนภักดี

(นายพนมวรรณ จันทร์ศิริ)

พนักงานจ้างเหมา

ที่ อก ๐๓๑๒ / ๕๐๐๙

กรมโรงงานอุตสาหกรรม
ถนนพระรามที่ ๖ แขวงทุ่งพญาไท
เขตราชเทวี กรุงเทพฯ ๑๐๔๐๐

๒๗ เมษายน ๒๕๖๕

เรื่อง อนุญาตให้ขึ้นทะเบียนเป็นวิศวกรควบคุมและอำนวยการใช้หม้อน้ำ

เรียน นายพรเทพ ชัยกิจสิริพันธุ์

ตามที่ท่าน นายพรเทพ ชัยกิจสิริพันธุ์ ผู้ได้รับใบอนุญาตประกอบวิชาชีพวิศวกรรมควบคุม สาขาวิศวกรรมเครื่องกล ตามพระราชบัญญัติวิศวกร พ.ศ.๒๕๔๒ ประเภท วุฒิวิศวกร เลขทะเบียน วก.๑๐๒๔ ได้ขอขึ้นทะเบียนเป็นวิศวกรควบคุมและอำนวยการใช้หม้อน้ำของโรงงาน บริษัท อมตะ บี.กริม เพาเวอร์ (ระยอง) จำกัด ทะเบียนโรงงานเลขที่ น.๘๘(๒)-๒/๒๕๕๘-นอต. (๘๒๒๕๐๖๐๐๒๒๕๕๘๗) ซึ่งตั้งอยู่เลขที่ ๗/๕๐๗ หมู่ที่ ๖ นิคมอุตสาหกรรมอมตะซิตี้ ระยอง ถนน - ตำบล มาบยางพร อำเภอ ปลวกแดง จังหวัด ระยอง ต่อกรมโรงงานอุตสาหกรรม นั้น

กรมโรงงานอุตสาหกรรมพิจารณาแล้ว อนุญาตให้ นายพรเทพ ชัยกิจสิริพันธุ์ ขึ้นทะเบียนเป็นวิศวกรควบคุมและอำนวยการใช้หม้อน้ำได้ ตามทะเบียนเลขที่ ๕-๓๑๔-๗๗๘-๙๗๑ จนถึงวันที่ ๓๑ ธันวาคม ๒๕๖๙ ทั้งนี้ ใบอนุญาตประกอบวิชาชีพวิศวกรรมควบคุมต้องยังไม่หมดอายุ หรือมีการต่ออายุเป็นที่เรียบร้อยแล้ว

ทั้งนี้ ขอให้ท่านปฏิบัติงานตามหน้าที่ความรับผิดชอบและจรรยาบรรณแห่งวิชาชีพวิศวกรรมโดยเคร่งครัด

ขอแสดงความนับถือ

(นายปณตสรรค์ สูจยานนท์)
ผู้อำนวยการกองส่งเสริมเทคโนโลยีความปลอดภัยโรงงาน
ปฏิบัติราชการแทน อธิบดีกรมโรงงานอุตสาหกรรม

กองส่งเสริมเทคโนโลยีความปลอดภัยโรงงาน
โทร. ๐ ๒๔๓๐ ๖๓๑๔ ต่อ ๒๓๐๓
โทรสาร ๐ ๒๔๓๐ ๖๓๑๔ ต่อ ๒๓๙๙
ไปรษณีย์อิเล็กทรอนิกส์ saraban@dlw.mail.go.th

ที่ อก ๐๓๑๒ / ๑๙๕๗๙

กรมโรงงานอุตสาหกรรม
ถนนพระรามที่ ๖ แขวงทุ่งพญาไท
เขตราชเทวี กรุงเทพฯ ๑๐๔๐๐

๒๖ ธันวาคม ๒๕๖๕

เรื่อง อนุญาตให้ต่ออายุทะเบียนเป็นผู้ควบคุมประจำหม้อน้ำหรือหม้อต้มที่ใช้ของเหลวเป็นสื่อนำความร้อน

เรียน นายสมบุญ ช่างบุตร

ตามที่ท่านได้ขอต่ออายุทะเบียนเป็นผู้ควบคุมประจำหม้อน้ำหรือหม้อต้มที่ใช้ของเหลวเป็นสื่อนำความร้อนของโรงงาน **บริษัท อมตะ ปี.กริม เพาเวอร์ (ระยอง) ๕ จำกัด** ทะเบียนโรงงานเลขที่ น.๘๘(๒)-๒/๒๕๕๘-นอต. (๘๒๒๕๐๖๐๐๒๒๕๕๘๗) ซึ่งตั้งอยู่เลขที่ ๗/๕๐๗ หมู่ที่ ๖ **นิคมอุตสาหกรรม อมตะซิตี้ ระยอง** ถนน - แขวง/ตำบล มาบยางพร เขต/อำเภอ ปลวกแดง จังหวัด **ระยอง** ต่อกรมโรงงานอุตสาหกรรม นั้น

กรมโรงงานอุตสาหกรรมพิจารณาแล้ว อนุญาตให้ท่านต่ออายุทะเบียนเป็นผู้ควบคุมประจำหม้อน้ำหรือหม้อต้มที่ใช้ของเหลวเป็นสื่อนำความร้อน ตามทะเบียนเลขที่ ๓๑๔-๗๗๘-๓๘๓๕๙ ประจำโรงงานดังกล่าวได้ทั้งนี้ จนถึงวันที่ ๓๑ ธันวาคม ๒๕๖๙

จึงเรียนมาเพื่อโปรดทราบ และขอให้ท่านปฏิบัติงานตามหน้าที่และความรับผิดชอบโดยเคร่งครัด

ขอแสดงความนับถือ

(นายบวร สัตยาวุฒิพงศ์)
ผู้อำนวยการกองส่งเสริมเทคโนโลยีความปลอดภัยโรงงาน
ปฏิบัติราชการแทน อธิบดีกรมโรงงานอุตสาหกรรม

กองส่งเสริมเทคโนโลยีความปลอดภัยโรงงาน
โทร. ๐ ๒๔๓๐ ๖๓๑๔ ต่อ ๒๓๑๒, ๒๓๑๓
โทรสาร ๐ ๒๔๓๐ ๖๓๑๔ ต่อ ๒๓๗๔
ไปรษณีย์อิเล็กทรอนิกส์ saraban@diw.mail.go.th

ที่ อก ๐๓๐๒ / ๑๔๕๗๑

กรมโรงงานอุตสาหกรรม
ถนนพระรามที่ ๖ แขวงทุ่งพญาไท
เขตราชเทวี กรุงเทพฯ ๑๐๔๐๐

๒๖ ธันวาคม ๒๕๖๕

เรื่อง อนุญาตให้ต่ออายุทะเบียนเป็นผู้ควบคุมประจำหม้อน้ำหรือหม้อต้มที่ใช้ของเหลวเป็นสื่อนำความร้อน

เรียน นายอรรคพงษ์ ชื่อมาก

ตามที่ท่านได้ขอต่ออายุทะเบียนเป็นผู้ควบคุมประจำหม้อน้ำหรือหม้อต้มที่ใช้ของเหลวเป็นสื่อนำความร้อนของโรงงาน บริษัท อมตะ บี.กริม เพาเวอร์ (ระยอง) ๕ จำกัด ทะเบียนโรงงานเลขที่ น.๔๘(๒)-๒/๒๕๕๔-นอต. (๔๒๒๕๐๒๐๐๒๒๕๔๘๗) ซึ่งตั้งอยู่เลขที่ ๗/๔๐๗ หมู่ที่ ๖ นิคมอุตสาหกรรมอมตะซิตี้ ระยอง ถนน - แขวง/ตำบล มาบยางพร เขต/อำเภอ ปลวกแดง จังหวัด ระยอง ต่อกรมโรงงานอุตสาหกรรม นั้น

กรมโรงงานอุตสาหกรรมพิจารณาแล้ว อนุญาตให้ท่านต่ออายุทะเบียนเป็นผู้ควบคุมประจำหม้อน้ำหรือหม้อต้มที่ใช้ของเหลวเป็นสื่อนำความร้อน ตามทะเบียนเลขที่ ๓๐๔-๗๙๔-๒๑๑๔๗๑ ประจำโรงงานดังกล่าวได้ ทั้งนี้ จนถึงวันที่ ๓๑ ธันวาคม ๒๕๖๙

จึงเรียนมาเพื่อโปรดทราบ และขอให้ท่านปฏิบัติงานตามหน้าที่และความรับผิดชอบโดยเคร่งครัด

ขอแสดงความนับถือ

(นายบวร สัตยาวุฒิพงศ์)
ผู้อำนวยการกองส่งเสริมเทคโนโลยีความปลอดภัยโรงงาน
ปฏิบัติราชการแทน อธิบดีกรมโรงงานอุตสาหกรรม

กองส่งเสริมเทคโนโลยีความปลอดภัยโรงงาน
โทร. ๐ ๒๕๓๐ ๖๓๑๔ ต่อ ๒๑๑๒, ๒๓๓๓
โทรสาร ๐ ๒๕๓๐ ๖๓๑๕ ต่อ ๒๓๑๙
ไปรษณีย์อิเล็กทรอนิกส์ saraban@diw.mail.go.th

ที่ อก ๐๓๑๒ / ๑๙๕๗๒

กรมโรงงานอุตสาหกรรม
ถนนพระรามที่ ๖ แขวงทุ่งพญาไท
เขตราชเทวี กรุงเทพฯ ๑๐๔๐๐

๒๖ ธันวาคม ๒๕๖๕

เรื่อง อนุญาตให้ต่ออายุทะเบียนเป็นผู้ควบคุมประจำหม้อน้ำหรือหม้อต้มที่ใช้ของเหลวเป็นสื่อนำความร้อน

เรียน นายทรงภพ ศาลากิจ

ตามที่ท่านได้ขอต่ออายุทะเบียนเป็นผู้ควบคุมประจำหม้อน้ำหรือหม้อต้มที่ใช้ของเหลวเป็นสื่อนำความร้อนของโรงงาน บริษัท อมละ บี.กรีม เพาเวอร์ (ระยอง) ๕ จำกัด ทะเบียนโรงงานเลขที่ น.๘๘(๒)-๒/๒๕๕๘ นอต. (๘๒๒๕๐๖๐๐๒๒๕๕๘๗) ซึ่งตั้งอยู่เลขที่ ๗/๕๐๗ หมู่ที่ ๖ นิคมอุตสาหกรรม อมตะซิตี้ ระยอง ถนน - แขวง/ตำบล มาบยางพร เขต/อำเภอ ปลวกแดง จังหวัด ระยอง ต่อกรมโรงงานอุตสาหกรรม นั้น

กรมโรงงานอุตสาหกรรมพิจารณาแล้ว อนุญาตให้ท่านต่ออายุทะเบียนเป็นผู้ควบคุมประจำหม้อน้ำหรือหม้อต้มที่ใช้ของเหลวเป็นสื่อนำความร้อน ตามทะเบียนเลขที่ ๓๑๔-๗๗๘-๒๔๖๘๙ ประจำโรงงานดังกล่าวได้ ทั้งนี้ จนถึงวันที่ ๓๑ ธันวาคม ๒๕๖๙

จึงเรียนมาเพื่อโปรดทราบ และขอให้ท่านปฏิบัติงานตามหน้าที่และความรับผิดชอบโดยเคร่งครัด

ขอแสดงความนับถือ

(นายบวร สัตยาวุฒิพงศ์)
ผู้อำนวยการกองส่งเสริมเทคโนโลยีความปลอดภัยโรงงาน
ปฏิบัติราชการแทน อธิบดีกรมโรงงานอุตสาหกรรม

กองส่งเสริมเทคโนโลยีความปลอดภัยโรงงาน
โทร. ๐ ๒๔๓๐ ๖๓๑๔ ต่อ ๒๓๑๒, ๒๓๑๓
โทรสาร ๐ ๒๔๓๐ ๖๓๑๔ ต่อ ๒๓๙๙
ไปรษณีย์อิเล็กทรอนิกส์ saraban@dw.mail.go.th

ที่ อก ๐๓๑๒/ ๑๙๕๗๘

กรมโรงงานอุตสาหกรรม
ถนนพระรามที่ ๖ แขวงทุ่งพญาไท
เขตราชเทวี กรุงเทพฯ ๑๐๔๐๐

๒๖ ธันวาคม ๒๕๖๕

เรื่อง อนุญาตให้ต่ออายุทะเบียนเป็นผู้ควบคุมประจำหม้อน้ำหรือหม้อต้มที่ใช้ของเหลวเป็นสื่อนำความร้อน

เรียน นายสารัช นันทไชย

ตามที่ท่านได้ขอต่ออายุทะเบียนเป็นผู้ควบคุมประจำหม้อน้ำหรือหม้อต้มที่ใช้ของเหลวเป็นสื่อนำความร้อนของโรงงาน บริษัท อมตะ บี.กริม เพาเวอร์ (ระยอง) ๕ จำกัด ทะเบียนโรงงานเลขที่ น.๘๘(๒)-๒/๒๕๕๘-นอต. (๘๒๒๕๐๖๐๐๒๒๕๕๘๗) ซึ่งตั้งอยู่เลขที่ ๗/๕๐๗ หมู่ที่ ๖ นิคมอุตสาหกรรม อมตะซิตี้ ระยอง ถนน - แขวง/ตำบล มาบยางพร เขต/อำเภอ ปลวกแดง จังหวัด ระยอง ต่อกรมโรงงานอุตสาหกรรม นั้น

กรมโรงงานอุตสาหกรรมพิจารณาแล้ว อนุญาตให้ท่านต่ออายุทะเบียนเป็นผู้ควบคุมประจำหม้อน้ำหรือหม้อต้มที่ใช้ของเหลวเป็นสื่อนำความร้อน ตามทะเบียนเลขที่ ๓๑๔-๓๗๘-๔๒๒๔๙ ประจำโรงงานดังกล่าวได้ทั้งนี้ จนถึงวันที่ ๓๑ ธันวาคม ๒๕๖๙

จึงเรียนมาเพื่อโปรดทราบ และขอให้ท่านปฏิบัติงานตามหน้าที่และความรับผิดชอบโดยเคร่งครัด

ขอแสดงความนับถือ

(นายบวร สัตยาวุฒิพงศ์)
ผู้อำนวยการกองส่งเสริมเทคโนโลยีความปลอดภัยโรงงาน
ปฏิบัติราชการแทน อธิบดีกรมโรงงานอุตสาหกรรม

กองส่งเสริมเทคโนโลยีความปลอดภัยโรงงาน
โทร. ๐ ๒๔๓๐ ๖๓๑๔ ต่อ ๒๓๑๒, ๒๓๑๓
โทรสาร ๐ ๒๔๓๐ ๖๓๑๔ ต่อ ๒๓๗๙
ไปรษณีย์อิเล็กทรอนิกส์ saraban@diw.mail.go.th

ที่ อก ๖๓๑๒ / ๑๓๐๙๒

กรมโรงงานอุตสาหกรรม
ถนนพระรามที่ ๖ แขวงทุ่งพญาไท
เขตราชเทวี กรุงเทพฯ ๑๐๔๐๐

๒๓ ธันวาคม ๒๕๖๔

เรื่อง อนุญาตให้ขึ้นทะเบียนเป็นผู้ควบคุมประจำหม้อน้ำหรือหม้อต้มที่ใช้ของเหลวเป็นสื่อนำความร้อน

เรียน **นายภาคย์ เปรมานนท์**

ตามที่ท่านได้ขอขึ้นทะเบียนเป็นผู้ควบคุมประจำหม้อน้ำหรือหม้อต้มที่ใช้ของเหลวเป็นสื่อนำความร้อนของโรงงาน **บริษัท อมตะ บี.กริม เพาเวอร์ (ระยอง) ๕ จำกัด** ทะเบียนโรงงานเลขที่ **น.๘๘(๒)-๒/๒๕๕๘-นอต.** ซึ่งตั้งอยู่เลขที่ ๗/๕๐๗ หมู่ที่ ๖ **นิคมอุตสาหกรรมอมตะซิตี้ ระยอง** แขวง/ตำบล **มาบยางพร** เขต/อำเภอ **ปลวกแดง** จังหวัด **ระยอง** ต่อกรมโรงงานอุตสาหกรรม ขั้น

กรมโรงงานอุตสาหกรรมพิจารณาแล้ว อนุญาตให้ท่านขึ้นทะเบียนเป็นผู้ควบคุมประจำหม้อน้ำหรือหม้อต้มที่ใช้ของเหลวเป็นสื่อนำความร้อน ตามทะเบียนเลขที่ ๓๑๔-๗๗๘-๔๑๘๗๑ ประจำโรงงานดังกล่าวได้ ทั้งนี้ จนถึงวันที่ ๓๑ ธันวาคม ๒๕๖๘ โดยได้ยกเลิกเลขทะเบียน ๓๑๑-๒๕๗-๔๑๘๗๑ เรียบร้อยแล้ว

จึงเรียนมาเพื่อโปรดทราบ และขอให้ท่านปฏิบัติงานตามหน้าที่และความรับผิดชอบโดยเคร่งครัด

จอแสดงความนับถือ

(นายปณตสรรค์ ลูจยานนท์)
ผู้อำนวยการกองส่งเสริมเทคโนโลยีความปลอดภัยโรงงาน
ปฏิบัติราชการแทน อธิบดีกรมโรงงานอุตสาหกรรม

กองส่งเสริมเทคโนโลยีความปลอดภัยโรงงาน
โทร. ๐ ๒๔๓๐ ๑๑๘๔ ต่อ ๑๑๓๑
โทรสาร ๐ ๒๔๓๐ ๑๑๓๔ ต่อ ๑๑๓๙
http://www.diw.go.th

ที่ อก ๐๓๑๒ / ๑๙๕๗๓

กรมโรงงานอุตสาหกรรม
ถนนพระรามที่ ๖ แขวงทุ่งพญาไท
เขตราชเทวี กรุงเทพฯ ๑๐๔๐๐

๒๖ ธันวาคม ๒๕๖๕

เรื่อง อนุญาตให้ต่ออายุทะเบียนเป็นผู้ควบคุมประจำหม้อน้ำหรือหม้อต้มที่ใช้ของเหลวเป็นสื่อนำความร้อน

เรียน นายธิรสิทธิ์ ธีรชัย ขนบลี

ตามที่ท่านได้ขอต่ออายุทะเบียนเป็นผู้ควบคุมประจำหม้อน้ำหรือหม้อต้มที่ใช้ของเหลวเป็นสื่อนำความร้อนของโรงงาน บริษัท อมตะ บี.กริม เพาเวอร์ (ระยอง) ๕ จำกัด ทะเบียนโรงงานเลขที่ น.๘๘(๒)-๒/๒๕๕๘-นอต. (๘๒๒๕๐๖๐๐๒๒๕๕๘๗) ซึ่งตั้งอยู่เลขที่ ๗/๕๐๗ หมู่ที่ ๖ นิคมอุตสาหกรรม อมตะซิตี้ ระยอง ถนน - แขวง/ตำบล มาบยางพร เขต/อำเภอ ปลวกแดง จังหวัด ระยอง ต่อกรมโรงงานอุตสาหกรรม นั้น

กรมโรงงานอุตสาหกรรมพิจารณาแล้ว อนุญาตให้ท่านต่ออายุทะเบียนเป็นผู้ควบคุมประจำหม้อน้ำหรือหม้อต้มที่ใช้ของเหลวเป็นสื่อนำความร้อน ตามทะเบียนเลขที่ ๓๑๔-๗๗๘-๓๕๓๐๐ ประจำโรงงานดังกล่าวได้ทั้งนี้ จนถึงวันที่ ๑๑ ธันวาคม ๒๕๖๙

จึงเรียนมาเพื่อโปรดทราบ และขอให้ท่านปฏิบัติงานตามหน้าที่และความรับผิดชอบโดยเคร่งครัด

จะแสดงความนับถือ

(นายบวร สัตยาวุฒิพงศ์)
ผู้อำนวยการกองส่งเสริมเทคโนโลยีความปลอดภัยโรงงาน
ปฏิบัติราชการแทน อธิบดีกรมโรงงานอุตสาหกรรม

กองส่งเสริมเทคโนโลยีความปลอดภัยโรงงาน
โทร. ๐ ๒๔๓๐ ๖๓๑๔ ต่อ ๒๓๓๒, ๒๓๓๓
โทรสาร ๐ ๒๔๓๐ ๖๓๑๔ ต่อ ๒๓๓๔
ไปรษณีย์อิเล็กทรอนิกส์ saraban@diw.mail.go.th

ที่ อก ๑๑๑๑๑/ ๑ ๓ ๐๘ ๙

กรมโรงงานอุตสาหกรรม
ถนนพระรามที่ ๖ แขวงทุ่งพญาไท
เขตราชเทวี กรุงเทพฯ ๑๐๑๐๐

๒๓ ธันวาคม ๒๕๖๙

เรื่อง อนุญาตให้ขึ้นทะเบียนเป็นผู้ควบคุมประจำหม้อน้ำหรือหม้อต้มที่ใช้ของเหลวเป็นสื่อนำความร้อนของโรงงาน

เรียน นายสิทธิกรณ์ เจนกลาง

ตามที่ท่านได้ขอขึ้นทะเบียนเป็นผู้ควบคุมประจำหม้อน้ำหรือหม้อต้มที่ใช้ของเหลวเป็นสื่อนำความร้อนของโรงงาน บริษัท อมตะ บี.กริม เพาเวอร์ (ระยอง) ๕ จำกัด ทะเบียนโรงงานเลขที่ ๓.๑๑๑(๒)-๒/๒๕๕๑-ระยอง ตั้งอยู่เลขที่ ๗/๕๐๗ หมู่ที่ ๖ นิคมอุตสาหกรรมอมตะซิตี้ ระยอง แขวง/ตำบล มาบยางพร เขต/อำเภอ ปลวกแดง จังหวัด ระยอง สังกัดกรมโรงงานอุตสาหกรรม นั้น

กรมโรงงานอุตสาหกรรมพิจารณาแล้ว อนุญาตให้ท่านขึ้นทะเบียนเป็นผู้ควบคุมประจำหม้อน้ำหรือหม้อต้มที่ใช้ของเหลวเป็นสื่อนำความร้อน ทะเบียนเลขที่ ๓๑๔-๑๑๑๔-๕๐๐๑๔ ประจำโรงงานดังกล่าวได้ ตั้งแต่วันที่ ๓๑ ธันวาคม ๒๕๖๙

จึงเรียนมาเพื่อโปรดทราบ และขอให้ท่านปฏิบัติตามข้อกำหนดความปลอดภัยโดยเคร่งครัด

ขอแสดงความนับถือ

(นายปกรณ์ศรัณย์ สุขเกษม)
ผู้อำนวยการกองส่งเสริมและบริหารอุตสาหกรรมเฉพาะโรงงาน
ปฏิบัติราชการแทน อธิบดีกรมโรงงานอุตสาหกรรม

กองส่งเสริมและบริหารอุตสาหกรรมเฉพาะโรงงาน
โทร. ๐ ๒๒๑๑ ๒๓๑๑ ต่อ ๑๑๑๑๑
โทรสาร ๐ ๒๒๑๑ ๒๓๑๑ ต่อ ๑๑๑๑๑
อีเมล์ ...

ที่ อก ๐๓๑๒ / ๑๙๕๗๔

กรมโรงงานอุตสาหกรรม
ถนนพระรามที่ ๖ แขวงทุ่งพญาไท
เขตราชเทวี กรุงเทพฯ ๑๐๔๐๐

๒๖ ธันวาคม ๒๕๖๕

เรื่อง อนุญาตให้ต่ออายุทะเบียนเป็นผู้ควบคุมประจำหม้อน้ำหรือหม้อต้มที่ใช้ของเหลวเป็นสื่อนำความร้อน

เรียน **นายวัลลภ ปลาทอง**

ตามที่ท่านได้ขอต่ออายุทะเบียนเป็นผู้ควบคุมประจำหม้อน้ำหรือหม้อต้มที่ใช้ของเหลวเป็นสื่อนำความร้อนของโรงงาน **บริษัท อมตะ บี.กริม เพาเวอร์ (ระยอง) ๕ จำกัด** ทะเบียนโรงงานเลขที่ **น.๔๘(๒)-๒/๒๕๕๘-นอต. (๘๒๒๕๐๖๐๐๒๒๕๔๘๗)** ซึ่งตั้งอยู่เลขที่ **๗/๕๐๗** หมู่ที่ **๖ นิคมอุตสาหกรรม อมตะซิตี้ ระยอง** ถนน - แขวง/ตำบล **มาบยางพร** เขต/อำเภอ **ปลวกแดง** จังหวัด **ระยอง** ต่อกรมโรงงานอุตสาหกรรม นั้น

กรมโรงงานอุตสาหกรรมพิจารณาแล้ว อนุญาตให้ท่านต่ออายุทะเบียนเป็นผู้ควบคุมประจำหม้อน้ำหรือหม้อต้มที่ใช้ของเหลวเป็นสื่อนำความร้อน ตามทะเบียนเลขที่ **๓๑๔-๗๗๘-๒๒๙๔๑** ประจำโรงงานดังกล่าวได้ ทั้งนี้ จนถึงวันที่ **๓๑ ธันวาคม ๒๕๖๙**

จึงเรียนมาเพื่อโปรดทราบ และขอให้ท่านปฏิบัติงานตามหน้าที่และความรับผิดชอบโดยเคร่งครัด

ขอแสดงความนับถือ

(นายบวร สัตยาวุฒิพงศ์)
ผู้อำนวยการกองส่งเสริมเทคโนโลยีความปลอดภัยโรงงาน
ปฏิบัติราชการแทน อธิบดีกรมโรงงานอุตสาหกรรม

กองส่งเสริมเทคโนโลยีความปลอดภัยโรงงาน
โทร. ๐ ๒๔๓๐ ๖๓๑๔ ต่อ ๒๓๑๒, ๒๓๑๓
โทรสาร ๐ ๒๔๓๐ ๖๓๑๕ ต่อ ๒๓๗๙
ไปรษณีย์อิเล็กทรอนิกส์ saraban@diw.mail.go.th

ที่ อก ๐๑๒๖ / ส ๓ ๐๗ ๐

กรมโรงงานอุตสาหกรรม
ถนนพระรามที่ ๖ แขวงทุ่งพญาไท
เขตราชเทวี กรุงเทพฯ ๑๐๔๐๐

๒๓ ธันวาคม ๒๕๖๔

เรื่อง อนุญาตให้ขึ้นทะเบียนเป็นผู้ควบคุมประจำหม้อน้ำหรือหม้อต้มที่ใช้ของเหลวเป็นสื่อนำความร้อน

เรียน นายอุเทศ บูรณสมภพ

ตามที่ท่านได้ยื่นทะเบียนเป็นผู้ควบคุมประจำหม้อน้ำหรือหม้อต้มที่ใช้ของเหลวเป็นสื่อนำความร้อนของโรงงาน บริษัท อมตะ บีเกริม เพาเวอร์ (ระยอง) ๔ จำกัด ทะเบียนโรงงานเลขที่ น.๔๘(๒)-๒/๒๕๕๘-นอต. ซึ่งตั้งอยู่เลขที่ ๗/๕๑๗ หมู่ที่ ๖ นิคมอุตสาหกรรมอมตะซิตี้ ระยอง ตำบล/แขวง มาบยางพร อำเภอ/เขต ปลวกแดง จังหวัด ระยอง ต่อกรมโรงงานอุตสาหกรรม นั้น

กรมโรงงานอุตสาหกรรมพิจารณาแล้ว อนุญาตให้ท่านขึ้นทะเบียนเป็นผู้ควบคุมประจำหม้อน้ำหรือหม้อต้มที่ใช้ของเหลวเป็นสื่อนำความร้อน ตามทะเบียนเลขที่ ๓๒๔-๑๑๒-๕๐๐๑๕ ของโรงงานดังกล่าวได้ ทั้งนี้ ตามบัญชีวันที่ ๓๑ ธันวาคม ๒๕๖๔

จึงเรียนมาเพื่อโปรดทราบ และแจ้งให้ผู้ขอขึ้นทะเบียนทราบต่อไป เพื่อจะได้ปฏิบัติตามกฎหมายโรงงานต่อไป

ขอแสดงความนับถือ

(นายประเสริฐ สุขสวัสดิ์)
ผู้อำนวยการกองสิ่งแวดล้อมและโรงงาน
ปฏิบัติราชการแทน อธิบดีกรมโรงงานอุตสาหกรรม

กองสิ่งแวดล้อมและโรงงาน
โทร. ๐ ๒๒๓๐ ๖๗๒๕ ต่อ ๑๑๑๑
โทรสาร ๐ ๒๒๓๐ ๖๗๒๕ ต่อ ๑๑๑๑
http://www.diw.go.th

ที่ อก ๐๓๑๒/ ๑๙๕๓๐

กรมโรงงานอุตสาหกรรม
ถนนพระรามที่ ๖ แขวงทุ่งพญาไท
เขตราชเทวี กรุงเทพฯ ๑๐๔๐๐

๒๖ ธันวาคม ๒๕๖๕

เรื่อง อนุญาตให้ขึ้นทะเบียนเป็นผู้ควบคุมประจำหม้อน้ำหรือหม้อต้มที่ใช้ของเหลวเป็นสื่อนำความร้อน

เรียน นายอาทิตย์ พลนาค

ตามที่ท่านได้ขอขึ้นทะเบียนเป็นผู้ควบคุมประจำหม้อน้ำหรือหม้อต้มที่ใช้ของเหลวเป็นสื่อนำความร้อนของโรงงาน บริษัท อมตะ บีเกริม เพาเวอร์ (ระยอง) ๕ จำกัด ทะเบียนโรงงานเลขที่ น.๘๘(๒)-๒/๒๕๕๘-นอต. (๘๒๒๕๐๖๐๐๒๒๕๕๘๗) ซึ่งตั้งอยู่เลขที่ ๗/๕๐๗ หมู่ที่ ๖ นิคมอุตสาหกรรมอมตะซิตี้ ระยอง ถนน - แขวง/ตำบล มาบยางพร เขต/อำเภอ ปลวกแดง จังหวัด ระยอง ต่อกรมโรงงานอุตสาหกรรม นั้น

กรมโรงงานอุตสาหกรรมพิจารณาแล้ว อนุญาตให้ท่านขึ้นทะเบียนเป็นผู้ควบคุมประจำหม้อน้ำหรือหม้อต้มที่ใช้ของเหลวเป็นสื่อนำความร้อน ตามทะเบียนเลขที่ ๓๑๙-๗๒๘-๕๑๒๒๘ ประจำโรงงานดังกล่าวได้ทั้งนี้ จนถึงวันที่ ๓๑ ธันวาคม ๒๕๖๙

จึงเรียนมาเพื่อโปรดทราบ และขอให้ท่านปฏิบัติงานตามหน้าที่และความรับผิดชอบโดยเคร่งครัด

ขอแสดงความนับถือ

(นายนวร สัตตาวุฒิพงศ์)
ผู้อำนวยการกองส่งเสริมเทคโนโลยีความปลอดภัยโรงงาน
ปฏิบัติราชการแทน อธิบดีกรมโรงงานอุตสาหกรรม

กองส่งเสริมเทคโนโลยีความปลอดภัยโรงงาน
โทร. ๐ ๒๔๓๐ ๖๓๑๔ ต่อ ๒๓๐๒, ๒๓๑๓
โทรสาร ๐ ๒๔๓๐ ๖๓๑๔ ต่อ ๒๙๘๙
ไปรษณีย์อิเล็กทรอนิกส์ saraban@diw.mail.go.th

ที่ อา ๐๓๐๑๖ / ๓๕๕๕

กรมโรงงานอุตสาหกรรม
ถนนพระรามที่ ๖ แขวงทุ่งพญาไท
เขตราชเทวี กรุงเทพฯ ๑๐๔๐๐

๒ ๑ มีนาคม ๒๕๖๕

เรื่อง อนุญาตให้ขึ้นทะเบียนเป็นผู้ควบคุมประจำหม้อน้ำหรือหม้อต้มที่ใช้ของเหลวเป็นสื่อนำความร้อน

เรียน นายสิทธา จัดนสำรวจ

ตามที่ท่านได้ขอขึ้นทะเบียนเป็นผู้ควบคุมประจำหม้อน้ำหรือหม้อต้มที่ใช้ของเหลวเป็นสื่อนำความร้อนของโรงงาน บริษัท อมตะ ปิโตรลิน เลาเวอร์ (ระยอง) ๔ จำกัด ทะเบียนโรงงานเลขที่ น.๘๘(๒)-๒/๒๕๕๘-นอร. (๘๒๒๕๐๖๐๐๒๒๕๕๘๗) ซึ่งตั้งอยู่เลขที่ ๗/๕๐๗ หมู่ที่ ๒ นิคมอุตสาหกรรมอมตะซิตี้ ระยอง แขวง/ตำบล มาบยางพร เขต/อำเภอ ปลวกแดง จังหวัด ระยอง ต่อกรมโรงงานอุตสาหกรรม นั้น

กรมโรงงานอุตสาหกรรมได้จากนายสิ้น อนุญาตให้ท่านขึ้นทะเบียนเป็นผู้ควบคุมประจำหม้อน้ำหรือหม้อต้มที่ใช้ของเหลวเป็นสื่อนำความร้อน ตามทะเบียนเลขที่ ๓๑๔-๑๑๒-๕๐๑๑๔ ประจำโรงงานดังกล่าวไว้ทั้งนี้ จนถึงวันที่ ๓๑ ธันวาคม ๒๕๖๗

จึงเรียนมาเพื่อโปรดทราบ และขอให้ท่านปฏิบัติงานตามหน้าที่และความรับผิดชอบโดยเคร่งครัด

จึงเรียนมาเพื่อโปรดทราบ

ขอแสดงความนับถือ

(นายปฐมสวรรค์ สุขยากมหัง)
ผู้อำนวยการกลุ่มส่งเสริมและพัฒนาใบอนุญาตประกอบกิจโรงงาน
ปฏิบัติราชการแทน อธิบดีกรมโรงงานอุตสาหกรรม

ติดต่อเจ้าหน้าที่ผู้รับผิดชอบ
โทร. ๐ ๒๒๓๐ ๓๓๑๔ ต่อ ๖๑๑๐๓
โทรสาร ๐ ๒๒๓๐ ๓๓๑๔ ต่อ ๖๑๑๑๔
ไปรษณีย์อิเล็กทรอนิกส์ saraban@diw.mail.go.th

ที่ อก ๐๓๑๒ / ๑๙๕๖๘

กรมโรงงานอุตสาหกรรม
ถนนพระรามที่ ๖ แขวงทุ่งพญาไท
เขตราชเทวี กรุงเทพฯ ๑๐๔๖๐

๒๖ ธันวาคม ๒๕๖๕

เรื่อง อนุญาตให้ขึ้นทะเบียนเป็นผู้ควบคุมประจำหม้อน้ำหรือหม้อต้มที่ใช้ของเหลวเป็นสื่อนำความร้อน

เรียน นายธัญ ลีรุ่งขาวารัตน์

ตามที่ท่านได้ขอขึ้นทะเบียนเป็นผู้ควบคุมประจำหม้อน้ำหรือหม้อต้มที่ใช้ของเหลวเป็นสื่อนำความร้อนของโรงงาน บริษัท อมตะ บี.กริม เพาเวอร์ (ระยอง) ๕ จำกัด ทะเบียนโรงงานเลขที่ น.๘๘(๒)-๒/๒๕๕๘-นอค. (๘๒๒๕๐๖๐๐๒๒๕๕๘๗) ซึ่งตั้งอยู่เลขที่ ๗/๕๐๗ หมู่ที่ ๖ นิคมอุตสาหกรรม อมตะซิตี้ ระยอง ถนน - แขวง/ตำบล มาบยางพร เขต/อำเภอ ปลวกแดง จังหวัด ระยอง ต่อกรมโรงงานอุตสาหกรรม นั้น

กรมโรงงานอุตสาหกรรมพิจารณาแล้ว อนุญาตให้ท่านขึ้นทะเบียนเป็นผู้ควบคุมประจำหม้อน้ำหรือหม้อต้มที่ใช้ของเหลวเป็นสื่อนำความร้อน ตามทะเบียนเลขที่ ๓๑๔-๗๗๘-๕๑๒๒๒ ประจำโรงงานดังกล่าวได้ทั้งนี้ จนถึงวันที่ ๓๑ ธันวาคม ๒๕๖๙

จึงเรียนมาเพื่อโปรดทราบ และขอให้ท่านปฏิบัติงานตามหน้าที่และความรับผิดชอบโดยเคร่งครัด

ขอแสดงความนับถือ

(นายบวร สัตยาวุฒิพงศ์)
ผู้อำนวยการกองส่งเสริมเทคโนโลยีความปลอดภัยโรงงาน
ปฏิบัติราชการแทน อธิบดีกรมโรงงานอุตสาหกรรม

กองส่งเสริมเทคโนโลยีความปลอดภัยโรงงาน
โทร. ๐ ๒๔๓๐ ๖๓๑๔ ต่อ ๒๓๑๒, ๒๓๑๓
โทรสาร ๐ ๒๔๓๐ ๖๓๑๔ ต่อ ๒๓๓๙
ไปรษณีย์อิเล็กทรอนิกส์ saraban@diw.mail.go.th

ที่ อก ๑๑๑๖/ ๑ ๑ ๐๙ ๑

กรมโรงงานอุตสาหกรรม
ถนนพระรามที่ ๖ แขวงทุ่งพญาไท
เขตราชเทวี กรุงเทพฯ ๑๐๔๐๐

๒๓ กันยายน ๒๕๖๘

เรื่อง อนุญาตให้ขึ้นทะเบียนเป็นผู้ควบคุมประจำหม้อน้ำหรือหม้อต้มที่ใช้ของเหลวเป็นสื่อนำความร้อน

เรียน นายอภิชาติ กองแก้ว

ตามที่ท่านได้ขอขึ้นทะเบียนเป็นผู้ควบคุมประจำหม้อน้ำหรือหม้อต้มที่ใช้ของเหลวเป็นสื่อนำความร้อนของโรงงาน **บริษัท อมตะ บี.กริม เพาเวอร์ (ระยอง) ๕ จำกัด** ทะเบียนโรงงานเลขที่ **น.๘๘(๖)-๒/๒๕๕๘-นอต.** ซึ่งตั้งอยู่เลขที่ **๗/๕๐๗** หมู่ที่ **๖ นิคมอุตสาหกรรมอมตะซิตี้ ระยอง** แขวง/ตำบล **มาบยางพร** เขต/อำเภอ **ปลวกแดง** จังหวัด **ระยอง** ของกรมโรงงานอุตสาหกรรม นั้น

กรมโรงงานอุตสาหกรรมพิจารณาแล้ว อนุญาตให้ท่านขึ้นทะเบียนเป็นผู้ควบคุมประจำหม้อน้ำหรือหม้อต้มที่ใช้ของเหลวเป็นสื่อนำความร้อน ทะเบียนเลขที่ **๓๑๕-๐๓๔-๕๐๐๓๖** ประจำโรงงานดังกล่าวได้ ทั้งนี้ จนถึงวันที่ ๓๑ ธันวาคม ๒๕๖๘

จึงเรียนมาเพื่อโปรดทราบ และขอให้ท่านปฏิบัติงานตามหน้าที่และความรับผิดชอบโดยเคร่งครัด

ขอแสดงความนับถือ

นายปุณยวัจน์ ศุขบรรเจิด
ผู้อำนวยการกองส่งเสริมและฟื้นฟูอุตสาหกรรม
ปฏิบัติราชการแทน อธิบดีกรมโรงงานอุตสาหกรรม

สำเนาเรียนเพื่อโปรดทราบ
[illegible]
[illegible]
[illegible]

ที่ อก ๐๑๑๖/ ๑๕๐๔๗

กรมโรงงานอุตสาหกรรม
ถนนพระรามที่ ๖ แขวงทุ่งพญาไท
เขตราชเทวี กรุงเทพฯ ๑๑๔๐๐

๒๙ ธันวาคม ๒๕๖๗

เรื่อง อนุญาตให้ขึ้นทะเบียนเป็นผู้ควบคุมประจำหม้อน้ำหรือหม้อต้มที่ใช้ของเหลวเป็นสื่อนำความร้อน

เรียน **นายชาญณรงค์ บุ่มนวล**

ตามที่ท่านได้ยื่นขึ้นทะเบียนเป็นผู้ควบคุมประจำหม้อน้ำหรือหม้อต้มที่ใช้ของเหลวเป็นสื่อนำความร้อนของโรงงาน **บริษัท อมตะ บี.กริม เพาเวอร์ (ระยอง) ๕ จำกัด** ทะเบียนโรงงานเลขที่ **ม.๘๘(๒)-๒/๒๕๔๘ นอต.** ซึ่งตั้งอยู่เลขที่ ๗/๔๐๑ หมู่ที่ ๖ นิคมอุตสาหกรรมอมตะซิตี้ ระยอง แขวงตำบลมาบยางพร เขตอำเภอปลวกแดง จังหวัดระยอง ต่อกรมโรงงานอุตสาหกรรม นั้น

กรมโรงงานอุตสาหกรรมพิจารณาแล้ว อนุญาตให้ท่านขึ้นทะเบียนเป็นผู้ควบคุมประจำหม้อน้ำหรือหม้อต้มที่ใช้ของเหลวเป็นสื่อนำความร้อน ตามทะเบียนเลขที่ **๓๑๔-๗๗๔-๕๐๐๗๒** ประจำโรงงานดังกล่าวได้ ทั้งนี้ จนถึงวันที่ ๓๑ ธันวาคม ๒๕๖๘

จึงเรียนมาเพื่อโปรดทราบ และขอให้ท่านปฏิบัติงานตามอำนาจหน้าที่และความรับผิดชอบโดยเคร่งครัด

ขอแสดงความนับถือ

นายปิยพงษ์ สุจยานนท์
รักษาการแทนอธิบดีกรมโรงงานอุตสาหกรรม
ปฏิบัติราชการแทน อธิบดีกรมโรงงานอุตสาหกรรม

กลุ่มงานเทคโนโลยีสิ่งแวดล้อมโรงงาน
โทร. ๐ ๒๒๔๐ ๑๑๑๔ ต่อ ๑๑๑๑
โทรสาร ๐ ๒๒๔๐ ๑๑๑๑ ต่อ ๑๑๑๑
http://www.diw.go.th

ที่ อก ๐๘๑๑๑๒/ ๒๕๕๕

กรมโรงงานอุตสาหกรรม
ถนนพระรามที่ ๖ แขวงทุ่งพญาไท
เขตราชเทวี กรุงเทพฯ ๑๐๔๐๐

๒๑ มีนาคม ๒๕๖๕

เรื่อง อนุญาตให้ขึ้นทะเบียนเป็นผู้ควบคุมประจำหม้อน้ำหรือหม้อต้มที่ใช้ของเหลวเป็นสื่อนำความร้อน

เรียน นายกำธร รุ่งจำรัล

ตามที่ท่านได้ขอขึ้นทะเบียนเป็นผู้ควบคุมประจำหม้อน้ำหรือหม้อต้มที่ใช้ของเหลวเป็นสื่อนำความร้อนของโรงงาน บริษัท อมตะ บีเอริม เพาเวอร์ (ระยอง) ๕ จำกัด ทะเบียนโรงงานเลขที่ น.๘๘(๒)-๒/๒๕๕๘-ปอด. (๘๒๕๐๖๐๐๒๒๕๕๘๗) ตั้งอยู่เลขที่ ๗/๔๐๗ หมู่ที่ ๒ นิคมอุตสาหกรรมอมตะซิตี้ ระยอง แขวง/ตำบล มาบยางพร เขต/อำเภอ ปลวกแดง จังหวัด ระยอง เพื่อกรมโรงงานอุตสาหกรรม นั้น

กรมโรงงานอุตสาหกรรมพิจารณาแล้ว อนุญาตให้ท่านขึ้นทะเบียนเป็นผู้ควบคุมประจำหม้อน้ำหรือทะเบียนที่ใช้ของเหลวเป็นสื่อนำความร้อน ตามทะเบียนเลขที่ ๓๑๕๑๓๑๙๕๐๓๑๗ ประจำโรงงานดังกล่าวได้ ทั้งนี้ ตามวันที่ ๓๑ ธันวาคม ๒๕๖๔

จึงเรียนมาเพื่อโปรดทราบ และขอให้ท่านปฏิบัติงานตามหน้าที่และความรับผิดชอบโดยเคร่งครัด

จึงเรียนมาเพื่อโปรดทราบ

ขอแสดงความนับถือ

(นายจรินทร์ สุขยางนาค)
ผู้อำนวยการกองส่งเสริมเทคโนโลยีความปลอดภัยโรงงาน
ปฏิบัติราชการแทน อธิบดีกรมโรงงานอุตสาหกรรม

กองส่งเสริมเทคโนโลยีความปลอดภัยโรงงาน
โทร. ๐ ๒๒๓๐ ๒๓๑๕ ต่อ ๒๑๑๑
โทรสาร ๐ ๒๒๓๐ ๒๓๑๕ ต่อ ๒๑๑๔
ไปรษณีย์อิเล็กทรอนิกส์ saraban@dev.mosi.go.th

ที่ อก ๐๓๑๒/ ๑๙๕๖๙

กรมโรงงานอุตสาหกรรม
ถนนพระรามที่ ๖ แขวงทุ่งพญาไท
เขตราชเทวี กรุงเทพฯ ๑๐๔๐๐

๒๖ ธันวาคม ๒๕๖๕

เรื่อง อนุญาตให้ขึ้นทะเบียนเป็นผู้ควบคุมประจำหม้อน้ำหรือหม้อต้มที่ใช้ของเหลวเป็นสื่อนำความร้อน

เรียน นายวิศนุ พะสูง

ตามที่ท่านได้ขอขึ้นทะเบียนเป็นผู้ควบคุมประจำหม้อน้ำหรือหม้อต้มที่ใช้ของเหลวเป็นสื่อนำความร้อนของโรงงาน บริษัท อมตะ บี.กริม เพาเวอร์ (ระยอง) ๕ จำกัด ทะเบียนโรงงานเลขที่ ร.๘๘(๒)-๒/๒๕๕๘-นอต. (๘๒๒๕๐๖๐๐๒๒๕๕๘๗) ซึ่งตั้งอยู่เลขที่ ๗/๕๐๓ หมู่ที่ ๖ นิคมอุตสาหกรรมอมตะซิตี้ ระยอง ถนน - แขวง/ตำบล มาบยางพร เขต/อำเภอ ปลวกแดง จังหวัด ระยอง ต่อกรมโรงงานอุตสาหกรรม นั้น

กรมโรงงานอุตสาหกรรมพิจารณาแล้ว อนุญาตให้ท่านขึ้นทะเบียนเป็นผู้ควบคุมประจำหม้อน้ำหรือหม้อต้มที่ใช้ของเหลวเป็นสื่อนำความร้อน ตามทะเบียนเลขที่ ๑๑๔-๑๑๒-๕๑๒๒๑ ประจำโรงงานดังกล่าวได้ทั้งนี้ จนถึงวันที่ ๓๑ ธันวาคม ๒๕๖๙

จึงเรียนมาเพื่อโปรดทราบ และขอให้ท่านปฏิบัติงานตามภาระหน้าที่และความรับผิดชอบโดยเคร่งครัด

ขอแสดงความนับถือ

(นายบวร สัจจาวุฒิเจริญ)
ผู้อำนวยการกองส่งเสริมเทคโนโลยีความปลอดภัยโรงงาน
ปฏิบัติราชการแทน อธิบดีกรมโรงงานอุตสาหกรรม

กองส่งเสริมเทคโนโลยีความปลอดภัยโรงงาน
โทร. ๐ ๒๔๓๐ ๖๓๑๔ ต่อ ๒๓๑๒, ๒๓๑๓
โทรสาร ๐ ๒๔๓๐ ๖๓๑๔ ต่อ ๒๓๑๔
ไปรษณีย์อิเล็กทรอนิกส์ sarabangsaw@mail.go.th

ที่ อก ๐๓๑๒ / ๑๙๕๗๕

กรมโรงงานอุตสาหกรรม
ถนนพระรามที่ ๖ แขวงทุ่งพญาไท
เขตราชเทวี กรุงเทพฯ ๑๐๔๐๐

๒๖ ธันวาคม ๒๕๖๙

เรื่อง อนุญาตให้ต่ออายุทะเบียนเป็นผู้ควบคุมประจำหม้อน้ำหรือหม้อต้มที่ใช้ของเหลวเป็นสื่อนำความร้อน

เรียน นายชัชพัย สุจริต

ตามที่ท่านได้ขอต่ออายุทะเบียนเป็นผู้ควบคุมประจำหม้อน้ำหรือหม้อต้มที่ใช้ของเหลวเป็นสื่อนำความร้อนของโรงงาน บริษัท อมตะ ปี.กรีม เพาเวอร์ (ระยอง) ๕ จำกัด ทะเบียนโรงงานเลขที่ น.๘๘(๒) ๒/๒๕๕๘-นอด. (๘๒๒๕๐๖๐๐๒๒๕๕๘๗) ซึ่งตั้งอยู่เลขที่ ๗/๕๐๗ หมู่ที่ ๖ นิคมอุตสาหกรรมอมตะซิตี้ ระยอง ถนน - แขวง/ตำบล มาบยางพร เขต/อำเภอ ปลวกแดง จังหวัด ระยอง ต่อกรมโรงงานอุตสาหกรรม นั้น

กรมโรงงานอุตสาหกรรมพิจารณาแล้ว อนุญาตให้ท่านต่ออายุทะเบียนเป็นผู้ควบคุมประจำหม้อน้ำหรือหม้อต้มที่ใช้ของเหลวเป็นสื่อนำความร้อน ตามทะเบียนเลขที่ ๓๑๔-๗๗๘-๓๘๘๐๘ ประจำโรงงานดังกล่าวได้ ทั้งนี้ จนถึงวันที่ ๓๑ ธันวาคม ๒๕๖๙

จึงเรียนมาเพื่อโปรดทราบ และขอให้ท่านปฏิบัติงานตามหน้าที่และความรับผิดชอบโดยเคร่งครัด

ขอแสดงความนับถือ

(นายบวร สัตยาวุฒิพงศ์)
ผู้อำนวยการกองส่งเสริมเทคโนโลยีความปลอดภัยโรงงาน
ปฏิบัติราชการแทน อธิบดีกรมโรงงานอุตสาหกรรม

กองส่งเสริมเทคโนโลยีความปลอดภัยโรงงาน
โทร. ๐ ๒๕๓๐ ๖๓๑๔ ต่อ ๒๓๑๒, ๒๓๑๓
โทรสาร ๐ ๒๕๓๐ ๖๓๑๔ ต่อ ๒๓๑๙
ไปรษณีย์อิเล็กทรอนิกส์ saraban@diw.mail.go.th

ที่ อก ๐๓๑๒/ ๑๙๕๗๖

กรมโรงงานอุตสาหกรรม
ถนนพระรามที่ ๖ แขวงทุ่งพญาไท
เขตราชเทวี กรุงเทพฯ ๑๐๔๐๐

๒๒ ธันวาคม ๒๕๖๕

เรื่อง อนุญาตให้ต่ออายุทะเบียนเป็นผู้ควบคุมประจำหม้อน้ำหรือหม้อต้มที่ใช้ของเหลวเป็นสื่อนำความร้อน

เรียน นายวีรยุทธ เกิดสุข

ตามที่ท่านได้ขอต่ออายุทะเบียนเป็นผู้ควบคุมประจำหม้อน้ำหรือหม้อต้มที่ใช้ของเหลวเป็นสื่อนำความร้อนของโรงงาน บริษัท อมตะ บี.กริม เพาเวอร์ (ระยอง) ๕ จำกัด ทะเบียนโรงงานเลขที่ น.๘๘(๒)-๒/๒๕๕๘-นอค. (๘๒๒๕๐๒๐๐๒๒๕๕๘๗) ซึ่งตั้งอยู่เลขที่ ๗/๕๐๗ หมู่ที่ ๖ นิคมอุตสาหกรรม อมตะซิตี้ ระยอง ถนน - แขวง/ตำบล มาบยางพร เขต/อำเภอ ปลวกแดง จังหวัด ระยอง ต่อกรมโรงงานอุตสาหกรรม นั้น

กรมโรงงานอุตสาหกรรมพิจารณาแล้ว อนุญาตให้ท่านต่ออายุทะเบียนเป็นผู้ควบคุมประจำหม้อน้ำหรือหม้อต้มที่ใช้ของเหลวเป็นสื่อนำความร้อน ตามทะเบียนเลขที่ ๓๑๔-๗๗๘-๔๑๒๑๗ ประจำโรงงานดังกล่าวได้ทั้งนี้ จนถึงวันที่ ๓๑ ธันวาคม ๒๕๖๙

จึงเรียนมาเพื่อโปรดทราบ และขอให้ท่านปฏิบัติงานตามหน้าที่และความรับผิดชอบโดยเคร่งครัด

ขอแสดงความนับถือ

(นายบวร ลัดยาวุฒิพงศ์)
ผู้อำนวยการกองส่งเสริมเทคโนโลยีความปลอดภัยโรงงาน
ปฏิบัติราชการแทน อธิบดีกรมโรงงานอุตสาหกรรม

กองส่งเสริมเทคโนโลยีความปลอดภัยโรงงาน
โทร. ๐ ๒๔๓๐ ๖๓๑๔ ต่อ ๒๓๑๒, ๒๓๑๓
โทรสาร ๐ ๒๔๓๐ ๖๓๑๔ ต่อ ๒๓๑๙
ไปรษณีย์อิเล็กทรอนิกส์ saraban@diw.mail.go.th

ที่ อก ๖๓๑๒ / ๑๓๐๘ ๘

กรมโรงงานอุตสาหกรรม
ถนนพระรามที่ ๖ แขวงทุ่งพญาไท
เขตราชเทวี กรุงเทพฯ ๑๐๔๐๐

๒๓ ธันวาคม ๒๕๖๘

เรื่อง อนุญาตให้ขึ้นทะเบียนเป็นผู้ควบคุมประจำหม้อน้ำหรือหม้อต้มที่ใช้ของเหลวเป็นสื่อนำความร้อน

เรียน **นายวุฒิชัย ชัติยะ**

ตามที่ท่านได้ขอขึ้นทะเบียนเป็นผู้ควบคุมประจำหม้อน้ำหรือหม้อต้มที่ใช้ของเหลวเป็นสื่อนำความร้อนของโรงงาน **บริษัท อมคะ บี.กริม เพาเวอร์ (ระยอง) ๕ จำกัด** ทะเบียนโรงงานเลขที่ น.๘๘(๒)-๒/๒๕๕๘-นอต. ซึ่งตั้งอยู่เลขที่ ๗/๕๐๗ หมู่ที่ ๖ **นิคมอุตสาหกรรมอมตะซิตี้ ระยอง** แขวง/ตำบล **มาบยางพร** เขต/อำเภอ **ปลวกแดง** จังหวัด **ระยอง** ต่อกรมโรงงานอุตสาหกรรม นั้น

กรมโรงงานอุตสาหกรรมพิจารณาแล้ว อนุญาตให้ท่านขึ้นทะเบียนเป็นผู้ควบคุมประจำหม้อน้ำหรือหม้อต้มที่ใช้ของเหลวเป็นสื่อนำความร้อน ตามทะเบียนเลขที่ **๓๑๔ ๗๒๘-๕๐๐๗๓** ประจำโรงงานดังกล่าวได้ ทั้งนี้ จนถึงวันที่ **๓๑ ธันวาคม ๒๕๖๘**

จึงเรียนมาเพื่อโปรดทราบ และขอให้ท่านปฏิบัติงานตามหน้าที่และความรับผิดชอบโดยเคร่งครัด

ขอแสดงความนับถือ

(นายปฏิเสธรรค์ สุขนานนท์)
ผู้อำนวยการกองส่งเสริมเทคโนโลยีความปลอดภัยโรงงาน
ปฏิบัติราชการแทน อธิบดีกรมโรงงานอุตสาหกรรม

กองส่งเสริมเทคโนโลยีความปลอดภัยโรงงาน
[illegible]
โทรสาร [illegible]
http://www.diw.go.th

ภาคผนวก ข.46

แผนการตรวจสอบ Safety Release Valve

MECHANICS SECTION PREVENTIVE MAINTENANCE 52 WEEKS PLAN

AMATA B.GRIMM POWER (RAYONG) 5 Limited

PM No.	Equipment No.	Equipment Description	Work Spec No.	Frequency preriod	Frequency unit	Y2025 Week 01	02	03	04	05	06	07	08	09	10	11	12	13	14	15	16	17	18	19	20	21	22	23	24	25	26	27	28	29	30	31	32	33	34	35	36	37	38	39	40	41	42	43	44	45	46	47	48	49	50	51	52
011S-MEC-005	011S-51MBA10AG001	GAS TURBINE GT#51	011S-MEC-055	30	Days
011S-MEC-007	011S-51MBK10AZ005	GAS TURBINE GEAR BOX GT#51	011S-MEC-002	30	Days
011S-MEC-008	011S-51MKA10AG001	GAS TURBINE GENERATOR GT#51	011S-MEC-002	30	Days
011S-MEC-009	011S-51MBV21AP005	GT#51 LUBE OIL PUMP 1	011S-MEC-002	30	Days
011S-MEC-010	011S-51MBV22AP005	GT#51 LUBE OIL PUMP 2	011S-MEC-002	30	Days
011S-MEC-011	011S-51MBV23AP005	GT#51 LUBE OIL PUMP 3	011S-MEC-002	30	Days
011S-MEC-012	011S-51MBV10AN005	GT#51 LUBE OIL FAN 1	011S-MEC-002	30	Days
011S-MEC-013	011S-51MBV10AN010	GT#51 LUBE OIL FAN 2	011S-MEC-002	30	Days
011S-MEC-032	011S-52MBA10AG001	GAS TURBINE GT#52	011S-MEC-055	30	Days
011S-MEC-034	011S-52MBK10AZ005	GAS TURBINE GEAR BOX GT#52	011S-MEC-002	30	Days
011S-MEC-035	011S-52MKA10AG001	GAS TURBINE GENERATOR GTG#52	011S-MEC-002	30	Days
011S-MEC-036	011S-52MBV21AP005	GT#52 LUBE OIL PUMP 1	011S-MEC-002	30	Days
011S-MEC-037	011S-52MBV22AP005	GT#52 LUBE OIL PUMP 2	011S-MEC-002	30	Days
011S-MEC-038	011S-52MBV23AP005	GT#52 LUBE OIL PUMP 3	011S-MEC-002	30	Days
011S-MEC-039	011S-52MBV10AN005	GT#52 LUBE OIL FAN 1	011S-MEC-002	30	Days
011S-MEC-040	011S-52MBV10AN010	GT#52 LUBE OIL FAN 2	011S-MEC-002	30	Days
011S-MEC-057	011S-50MAK10AU001	GEAR BOX STEAM TURBINE	011S-MEC-056	30	Days
011S-MEC-058	011S-50MAV21AP010	GEAR BOX STEAM TURBINE	011S-MEC-003	30	Days
011S-MEC-059	011S-50PAH10AT001	STEAM TURBINE GENERATOR	011S-MEC-003	30	Days
011S-MEC-060	011S-50LCB11AP001	MAIN OIL PUMP	011S-MEC-003	30	Days
011S-MEC-063	011S-50LCB12AP001	CONDENSER BALL CLEANING SYSTEM	011S-MEC-003	30	Days
011S-MEC-064	011S-50MAJ11AP001	CONDENSER EXTRACTION PUMP 1	011S-MEC-003	30	Days
011S-MEC-065	011S-50MAJ12AP001	CONDENSER EXTRACTION PUMP 2	011S-MEC-003	30	Days
011S-MEC-066	0115-50MAW30AC001	CONDENSER VACUUM PUMP 1	011S-MEC-003	30	Days
011S-MEC-067	011S-50MAK10AU001	CONDENSER VACUUM PUMP 2	011S-MEC-003	30	Days
011S-MEC-068	011S-50MAK10AG001	GLAND STEAM CONDENSOR	011S-MEC-003	30	Days
011S-MEC-019	011S-51MBP20AP001	Fuel Gas Heater GT#51	011S-MEC-053	30	Days
011S-MEC-046	011S-52MBP20AP001	Fuel Gas Heater GT#52	011S-MEC-053	30	Days
011S-MEC-095	011S-05GAF11AP001	RAW WATER PUMP 1	011S-MEC-001	30	Days
011S-MEC-096	011S-05GAF12AP001	RAW WATER PUMP 2	011S-MEC-001	30	Days
011S-MEC-097	011S-05GBL31AP001	SERVICE WATER PUMP 1	011S-MEC-001	30	Days
011S-MEC-098	011S-05GBL32AP001	SERVICE WATER PUMP 2	011S-MEC-001	30	Days
011S-MEC-099	011S-05GCK11AP001	MAKEUP WATER PUMP 1 (DEMINE)	011S-MEC-001	30	Days
011S-MEC-100	011S-05GCK12AP001	MAKEUP WATER PUMP 2 (DEMINE)	011S-MEC-001	30	Days
011S-MEC-101	011S-05GBM21AP001	RETENTION PIT PUMP 1	011S-MEC-001	30	Days
011S-MEC-102	011S-05GBM22AP001	RETENTION PIT PUMP 2	011S-MEC-001	30	Days
011S-MEC-103	011S-05GBM51AP001	EMERGENCY PIT PUMP 1	011S-MEC-001	30	Days
011S-MEC-104	011S-05GBM52AP001	EMERGENCY PIT PUMP 2	011S-MEC-001	30	Days
011S-MEC-105	011S-05GBK21AP001	CT MAKE-UP WATER PUMP 1	011S-MEC-001	30	Days
011S-MEC-106	011S-05GBK22AP001	CT MAKE-UP WATER PUMP 2	011S-MEC-001	30	Days
011S-MEC-107	011S-05PAC11AP001	MAIN COOLING WATER PUMP 1	011S-MEC-001	30	Days
011S-MEC-108	011S-05PAC12AP001	MAIN COOLING WATER PUMP 2	011S-MEC-001	30	Days
011S-MEC-109	011S-05PCC11AP001	AUXILIARY COOLING WATER PUMP 1	011S-MEC-001	30	Days
011S-MEC-110	011S-05PCC12AP001	AUXILIARY COOLING WATER PUMP 2	011S-MEC-001	30	Days
011S-MEC-111	011S-05PGC11AP001	CLOSED CYCLE COOLING WATER PUMP 1	011S-MEC-001	30	Days
011S-MEC-112	011S-05PGC12AP001	CLOSED CYCLE COOLING WATER PUMP 2	011S-MEC-001	30	Days
011S-MEC-113	011S-50PAC10AH001	COOLING TOWER CELL 1	011S-MEC-001	30	Days
011S-MEC-114	011S-50PAC11AH001	COOLING TOWER CELL 2	011S-MEC-001	30	Days
011S-MEC-173	011S-05GBK11AP001	CLARIFIER WATER PUMP 1	011S-MEC-039	30	Days
011S-MEC-174	011S-05GBK12AP001	CLARIFIER WATER PUMP 2	011S-MEC-039	30	Days
011S-MEC-175	011S-05GBK21AP010	MF FEED PUMP 1	011S-MEC-039	30	Days
011S-MEC-176	011S-05GBK22AP010	MF FEED PUMP 2	011S-MEC-039	30	Days
011S-MEC-177	011S-05GCR11AP001	NEUTRALIZED EFFLUENT PUMP1	011S-MEC-039	30	Days
011S-MEC-543	011S-05GCR12AP002	NEUTRALIZED EFFLUENT PUMP2	011S-MEC-039	30	Days
011S-MEC-544	011S-05GBR11AP001	REVERS FILTERATION PUMP 1	011S-MEC-039	30	Days
011S-MEC-546	011S-05GBR12AP002	REVERS FILTERATION PUMP 2	011S-MEC-039	30	Days
011S-MEC-143	011S-05GCK11AP010	RO FEED PUMP 1	011S-MEC-039	30	Days
011S-MEC-144	011S-05GCK12AP010	RO FEED PUMP 2	011S-MEC-039	30	Days
011S-MEC-145	011S-05GCF11AP001	RO HP PUMP 1	011S-MEC-039	30	Days
011S-MEC-146	011S-05GCF12AP002	RO HP PUMP 2	011S-MEC-039	30	Days
011S-MEC-165	011S-05GBA10AM001	CLARIFIER	011S-MEC-039	30	Days
011S-MEC-166	011S-05GBA10AM001	SLUDGE TICKENER	011S-MEC-039	30	Days
011S-MEC-167	011S-05GBA10AM001	SLUDGE FEED PUMP 1	011S-MEC-039	30	Days
011S-MEC-168	011S-05GCK32AP002	SLUDGE FEED PUMP 2	011S-MEC-039	30	Days
011S-MEC-169	011S-05GBA50AT001	DECANTER	011S-MEC-039	30	Days
011S-MEC-170	011S-05GCC11AN001	AIR BLOWER 1	011S-MEC-039	30	Days
011S-MEC-171	011S-05GCC12AN002	AIR BLOWER 2	011S-MEC-039	30	Days
011S-MEC-172	011S-05LAC41AP001	LP Boiler Feedwater Pump 1	011S-MEC-001	30	Days
011S-MEC-173	011S-05LAC42AP001	LP Boiler Feedwater Pump 2	011S-MEC-001	30	Days
011S-MEC-174	011S-05LAC43AP001	LP Boiler Feedwater Pump 3	011S-MEC-001	30	Days
011S-MEC-175	011S-05LAC11AP001	HP Boiler Feedwater Pump 1	011S-MEC-001	30	Days
011S-MEC-176	011S-05LAC12AP001	HP Boiler Feedwater Pump 2	011S-MEC-001	30	Days
011S-MEC-177	011S-05LAC13AP001	HP Boiler Feedwater Pump 3	011S-MEC-001	30	Days
011S-MEC-184	011S-51HNB11AN001	HRSG 51 Seal Air Fan 1	011S-MEC-040	30	Days
011S-MEC-185	011S-51HNB12AN001	HRSG 51 Seal Air Fan 2	011S-MEC-040	30	Days
011S-MEC-186	011S-52HNB11AN001	HRSG 52 Seal Air Fan 1	011S-MEC-040	30	Days
011S-MEC-187	011S-52HNB12AN001	HRSG 52 Seal Air Fan 2	011S-MEC-040	30	Days
011S-MEC-543	011S-05SGU13AP001	Jockey Pump	011S-MEC-001	30	Days
011S-MEC-544	011S-05SGU11AP001	ENGINE DRIVE FIRE PUMP	011S-MEC-001	30	Days
011S-MEC-546	011S-05SGU12AP001	MOTOR DRIVE FIRE PUMP.	011S-MEC-001	30	Days
011S-MEC-545	011S-05SGU11AP001	ENGINE DRIVE FIRE PUMP	011S-MEC-059	30	Days
011S-MEC-635	011S-05WS01PU001	MOTOR DRIVE FIRE PUMP.	011S-MEC-061	30	Days
011S-MEC-636	011S-05WS01BS001	BAND SAW	011S-MEC-061	30	Days
011S-MEC-637	011S-05WS01HY001	HYDRAULIC PRESS	011S-MEC-061	30	Days
011S-MEC-638	011S-05WS01GR001	GRINDER	011S-MEC-061	30	Days
011S-MEC-639	011S-05WS01DR001	DRILL	011S-MEC-061	30	Days
011S-MEC-640	011S-05WS01WD001	WELDER MACHINE	011S-MEC-061	30	Days
011S-MEC-641	011S-05WS01PT001	PIPE THREAD	011S-MEC-061	30	Days
011S-MEC-643	011S-05GCK21AP001	CEDI FEED PUMP 1	011S-MEC-039	30	Days
011S-MEC-644	011S-05GCK22AP001	CEDI FEED PUMP 2	011S-MEC-039	30	Days
011S-MEC-647	011S-05GBA10AM001	CLARIFIER	011S-MEC-061	60	Days
011S-MEC-006	011S-51MBA10AG001	GAS TURBINE GT#51	011S-MEC-007	90	Days
011S-MEC-014	011S-51MBV10BB005	GT#51 LUBE OIL TANK	011S-MEC-004	90	Days
011S-MEC-033	011S-52MBA10AG001	GAS TURBINE GT#52	011S-MEC-007	90	Days
011S-MEC-041	011S-52MBV10BB005	GT#52 LUBE OIL TANK	011S-MEC-004	90	Days
011S-MEC-061	011S-50MAV10BB010	ST#50 MAIN OIL TANK	011S-MEC-004	90	Days
011S-MEC-062	011S-50MAX10BB010	HP CONTROL OIL TANK	011S-MEC-004	90	Days
011S-MEC-132	011S-05GCK31AP001	SLUDGE FEED PUMP 1	011S-MEC-023	90	Days
011S-MEC-133	011S-05GCK32AP002	SLUDGE FEED PUMP 2	011S-MEC-023	90	Days
011S-MEC-281	011S-51HAH10AC001	HRSG 51	011S-MEC-007	90	Days
011S-MEC-541	011S-05SGU11AP001	ENGINE DRIVE FIRE PUMP	011S-MEC-031	90	Days
011S-MEC-642	011S-52HAH10AC001	HRSG 52	011S-MEC-007	90	Days
011S-MEC-070	011S-50LCB11AP001	CONDENSER EXTRACTION PUMP 1	011S-MEC-028	120	Days
011S-MEC-071	011S-50LCB12AP001	CONDENSER EXTRACTION PUMP 2	011S-MEC-028	120	Days
011S-MEC-075	011S-05GAF11AP001	RAW WATER PUMP 1	011S-MEC-008	120	Days
011S-MEC-076	011S-05GAF12AP001	RAW WATER PUMP 2	011S-MEC-008	120	Days
011S-MEC-077	011S-05GBL31AP001	SERVICE WATER PUMP 1	011S-MEC-009	120	Days
011S-MEC-078	011S-05GBL32AP001	SERVICE WATER PUMP 2	011S-MEC-009	120	Days
011S-MEC-079	011S-05GCK11AP001	MAKEUP WATER PUMP 1 (DEMINE)	011S-MEC-010	120	Days
011S-MEC-080	011S-05GCK12AP001	MAKEUP WATER PUMP 2 (DEMINE)	011S-MEC-010	120	Days
011S-MEC-081	011S-05GBM21AP001	RETENTION PIT PUMP 1	011S-MEC-015	120	Days
011S-MEC-082	011S-05GBM22AP001	RETENTION PIT PUMP 2	011S-MEC-015	120	Days
011S-MEC-083	011S-05GBM51AP001	EMERGENCY PIT PUMP 1	011S-MEC-016	120	Days
011S-MEC-084	011S-05GBM52AP001	EMERGENCY PIT PUMP 2	011S-MEC-016	120	Days
011S-MEC-085	011S-05GBK21AP001	CT MAKE-UP WATER PUMP 1	011S-MEC-011	120	Days

0115-MEC-086	0115-05GBK22AP001	CT MAKE-UP WATER PUMP 2	0115-MEC-011	120	Days
0115-MEC-087	0115-05PAC11AP001	MAIN COOLING WATER PUMP 1	0115-MEC-014	120	Days
0115-MEC-088	0115-05PAC12AP001	MAIN COOLING WATER PUMP 2	0115-MEC-014	120	Days
0115-MEC-089	0115-05PCC11AP001	AUXILIARY COOLING WATER PUMP 1	0115-MEC-013	120	Days
0115-MEC-090	0115-05PCC12AP001	AUXILIARY COOLING WATER PUMP 2	0115-MEC-013	120	Days
0115-MEC-091	0115-05PGC11AP001	CLOSED CYCLE COOLING WATER PUMP 1	0115-MEC-012	120	Days
0115-MEC-092	0115-05PGC12AP001	CLOSED CYCLE COOLING WATER PUMP 2	0115-MEC-012	120	Days
0115-MEC-134	0115-05GBA50AT001	DECANTER	0115-MEC-029	120	Days
0115-MEC-135	0115-05GCC11AN001	AIR BLOWER 1	0115-MEC-024	120	Days
0115-MEC-136	0115-05GCC12AN002	AIR BLOWER 2	0115-MEC-024	120	Days
0115-MEC-147	0115-05GBN11AP001	PAC FEED PUMP NO.1	0115-MEC-022	120	Days
0115-MEC-148	0115-05GBN12AP001	PAC FEED PUMP NO.2	0115-MEC-022	120	Days
0115-MEC-149	0115-05GBN21AP001	NAOCI FEED PUMP NO.1	0115-MEC-022	120	Days
0115-MEC-150	0115-05GBN22AP001	NAOCI FEED PUMP NO.2	0115-MEC-022	120	Days
0115-MEC-151	0115-05GBN23AP001	NAOCI FEED PUMP NO.3	0115-MEC-022	120	Days
0115-MEC-152	0115-05GBN24AP001	NAOCI FEED PUMP NO.4	0115-MEC-022	120	Days
0115-MEC-153	0115-05GBN31AP001	NAOH FEED PUMP NO.1	0115-MEC-022	120	Days
0115-MEC-154	0115-05GBN32AP001	NAOH FEED PUMP NO.2	0115-MEC-022	120	Days
0115-MEC-155	0115-05GCN24AP001	NAOH FEED PUMP NO.3	0115-MEC-022	120	Days
0115-MEC-156	0115-05GCN25AP001	NAOH FEED PUMP NO.4	0115-MEC-022	120	Days
0115-MEC-157	0115-05GCN21AP001	NAOH FEED PUMP NO.5	0115-MEC-022	120	Days
0115-MEC-158	0115-05GCN22AP001	NAOH FEED PUMP NO.6	0115-MEC-022	120	Days
0115-MEC-159	0115-05GBN41AP001	POLYMER FEED PUMP NO.1	0115-MEC-022	120	Days
0115-MEC-160	0115-05GBN42AP001	POLYMER FEED PUMP NO.2	0115-MEC-022	120	Days
0115-MEC-161	0115-05GBN43AP001	POLYMER FEED PUMP NO.3	0115-MEC-022	120	Days
0115-MEC-162	0115-05GBN44AP001	POLYMER FEED PUMP NO.4	0115-MEC-022	120	Days
0115-MEC-163	0115-05GCN51AP001	H2SO4 FEED PUMP NO.1	0115-MEC-022	120	Days
0115-MEC-164	0115-05GCN52AP001	H2SO4 FEED PUMP NO.2	0115-MEC-022	120	Days
0115-MEC-069	0115-50PAH10AT001	CONDENSER BALL CLEANING SYSTEM	0115-MEC-018	180	Days
0115-MEC-072	0115-50PAC10AH001	CONDENSER VACUUM PUMP 1	0115-MEC-027	180	Days
0115-MEC-073	0115-50PAC11AH001	CONDENSER VACUUM PUMP 2	0115-MEC-027	180	Days
0115-MEC-074	0115-50SMA10AE001	ST BUILDING TRAVELLING OVERHEAD CRANE	0115-MEC-043	180	Days
0115-MEC-093	0115-50PAC10AH001	COOLING TOWER CELL 1	0115-MEC-017	180	Days
0115-MEC-094	0115-50PAC11AH001	COOLING TOWER CELL 2	0115-MEC-017	180	Days
0115-MEC-123	0115-50PAC10AH001	COOLING TOWER CELL 1	0115-MEC-004	180	Days
0115-MEC-124	0115-50PAC11AH001	COOLING TOWER CELL 2	0115-MEC-004	180	Days
0115-MEC-128	0115-05GBA10AM001	CLARIFIER AGITATOR	0115-MEC-025	180	Days
0115-MEC-131	0115-05GBA40AT002	SLUDGE TICKENER	0115-MEC-026	180	Days
0115-MEC-178	0115-05LAC41AP001	LP Boiler Feedwater Pump 1	0115-MEC-021	180	Days
0115-MEC-179	0115-05LAC42AP001	LP Boiler Feedwater Pump 2	0115-MEC-021	180	Days
0115-MEC-180	0115-05LAC43AP001	LP Boiler Feedwater Pump 3	0115-MEC-021	180	Days
0115-MEC-181	0115-05LAC11AP001	HP Boiler Feedwater Pump 1	0115-MEC-020	180	Days
0115-MEC-182	0115-05LAC12AP001	HP Boiler Feedwater Pump 2	0115-MEC-020	180	Days
0115-MEC-183	0115-05LAC13AP001	HP Boiler Feedwater Pump 3	0115-MEC-020	180	Days
0115-MEC-188	0115-05QCA11AP001	Phosphate dosing pump HP drum no.1	0115-MEC-019	180	Days
0115-MEC-189	0115-05QCA12AP001	Phosphate dosing pump HP drum no.2	0115-MEC-019	180	Days
0115-MEC-190	0115-05QCA13AP001	Phosphate dosing pump HP drum no.3	0115-MEC-019	180	Days
0115-MEC-191	0115-05QCA14AP001	Phosphate dosing pump LP drum no.1	0115-MEC-019	180	Days
0115-MEC-192	0115-05QCA15AP001	Phosphate dosing pump LP drum no.2	0115-MEC-019	180	Days
0115-MEC-193	0115-05QCA16AP001	Phosphate dosing pump LP drum no.3	0115-MEC-019	180	Days
0115-MEC-194	0115-05QCA21AP001	Amonia dosing pump no.1	0115-MEC-019	180	Days
0115-MEC-195	0115-05QCA22AP001	Amonia dosing pump no.2	0115-MEC-019	180	Days
0115-MEC-196	0115-05QCA31AP001	O2 Scavenger dosing pump no.1	0115-MEC-019	180	Days
0115-MEC-197	0115-05QCA32AP002	O2 Scavenger dosing pump no.2	0115-MEC-019	180	Days
0115-MEC-559	0115-05SGV30AA017	VALVE HYDRANT H.01	0115-MEC-034	180	Days
0115-MEC-560	0115-05SGV30AA008	VALVE HYDRANT H.02	0115-MEC-034	180	Days
0115-MEC-561	0115-05SGV30AA001	VALVE HYDRANT H.03	0115-MEC-034	180	Days
0115-MEC-562	0115-05SGV30AA009	VALVE HYDRANT H.04	0115-MEC-034	180	Days
0115-MEC-563	0115-05SGV30AA007	VALVE HYDRANT H.05	0115-MEC-034	180	Days
0115-MEC-564	0115-05SGV30AA013	VALVE HYDRANT H.06	0115-MEC-034	180	Days
0115-MEC-565	0115-05SGV30AA015	VALVE HYDRANT H.07	0115-MEC-034	180	Days
0115-MEC-566	0115-05SGU11AA010	GATE VALVE SUCTION ENGINE PUMP	0115-MEC-034	180	Days
0115-MEC-567	0115-05SGE40AA010	GATE VALVE SPRINKLER FIRE SATATION	0115-MEC-034	180	Days
0115-MEC-568	0115-05SGU12AA010	GATE VALVE SUCTION MOTOR PUMP	0115-MEC-034	180	Days
0115-MEC-569	0115-05SGU13AA010	GATE VALVE SUCTION JOCKY PUMP	0115-MEC-034	180	Days
0115-MEC-570	0115-05SGV30AA018	GATE VLVE FIRE RING MAIM	0115-MEC-034	180	Days
0115-MEC-571	0115-05SGV30AA019	GATE VLVE FIRE RING MAIM	0115-MEC-034	180	Days
0115-MEC-572	0115-05SGV30AA011	GATE VLVE FIRE RING MAIM SUPLY DELUGE VALVE AUX.TRANSFORMER AREA	0115-MEC-034	180	Days
0115-MEC-573	0115-05SGV30AA010	GATE VLVE FIRE RING MAIM SUPLY DELUGE VALVE AUX.TRANSFORMER AREA	0115-MEC-034	180	Days
0115-MEC-574	0115-05SGD10AA010	DELUGE VALVE AUX#1 DELUGE VALVE AT AUX.TRANSFORMER AREA	0115-MEC-034	180	Days
0115-MEC-575	0115-05SGD11AA010	DELUGE VALVE AUX#2 DELUGE VALVE AT AUX.TRANSFORMER AREA	0115-MEC-034	180	Days
0115-MEC-576	0115-05SGD12AA010	DELUGE VALVE AUX#3 DELUGE VALVE AT AUX.TRANSFORMER AREA	0115-MEC-034	180	Days
0115-MEC-577	0115-05SGD13AA010	DELUGE VALVE AUX#4 DELUGE VALVE AT AUX.TRANSFORMER AREA	0115-MEC-034	180	Days
0115-MEC-578	0115-05SGD14AA010	DELUGE VALVE AUX#5 DELUGE VALVE AT AUX.TRANSFORMER AREA	0115-MEC-034	180	Days
0115-MEC-579	0115-05SGD15AA010	DELUGE VALVE AUX#6 DELUGE VALVE AT AUX.TRANSFORMER AREA	0115-MEC-034	180	Days
0115-MEC-580	0115-05SGE10AA010	GATE VLVE FIRE RING MAIM SUPLY E&C BUILDING	0115-MEC-034	180	Days
0115-MEC-581	0115-05SGV31AA014	GATE VLVE FIRE RING MAIM SUPLY E&C BUILDING	0115-MEC-034	180	Days
0115-MEC-582	0115-05SGE20AA010	GATE VLVE FIRE RING MAIM SUPLY SPARY SPRINKLER EDG.	0115-MEC-034	180	Days
0115-MEC-583	0115-05SGD20AA010	GATE VLVE FIRE RING MAIM SUPLY DELUGE VALVE GSUT AREA	0115-MEC-034	180	Days
0115-MEC-584	0115-05SGD21AA010	GATE VLVE FIRE RING MAIM SUPLY DELUGE VALVE GSUT AREA	0115-MEC-034	180	Days
0115-MEC-585	0115-05SGD22AA010	GATE VLVE FIRE RING MAIM SUPLY DELUGE VALVE GSUT AREA	0115-MEC-034	180	Days
0115-MEC-586	0115-05SGD23AA010	GATE VLVE FIRE RING MAIM SUPLY DELUGE VALVE GSUT AREA	0115-MEC-034	180	Days
0115-MEC-587	0115-05SGD24AA010	GATE VLVE FIRE RING MAIM SUPLY DELUGE VALVE GSUT AREA	0115-MEC-034	180	Days
0115-MEC-588	0115-05SGV30AA012	GATE VLVE FIRE RING MAIM SUPLY STG. BUILDING DELUGE VALVE	0115-MEC-034	180	Days
0115-MEC-589	0115-05SGD30AA010	GATE VLVE FIRE RING MAIM SUPLY DELUGE VALVE STG. BUILDING	0115-MEC-034	180	Days
0115-MEC-590	0115-05SGV30AA003	GATE VLVE FIRE SUPLY WORK SHOP BUILDING	0115-MEC-034	180	Days
0115-MEC-600	0115-51LBA10AA910	HP STEAM51 LINE DRN TRAP	0115-MEC-033	180	Days
0115-MEC-601	0115-51LBA10AA920	HP STEAM51 LINE DRN TRAP	0115-MEC-033	180	Days
0115-MEC-602	0115-51LBA20AA910	HP STEAM51 BYP LINE DRN TRAP	0115-MEC-033	180	Days
0115-MEC-603	0115-51LBG10AA910	HP LIVE STEAM51 LINE DRN TRAP	0115-MEC-033	180	Days
0115-MEC-604	0115-52LBA10AA910	HP STEAM52 LINE DRN TRAP	0115-MEC-033	180	Days
0115-MEC-605	0115-52LBA10AA930	HP STEAM52 LINE DRN TRAP	0115-MEC-033	180	Days
0115-MEC-606	0115-52LBA20AA910	HP STEAM52 BYP LINE DRN TRAP	0115-MEC-033	180	Days
0115-MEC-607	0115-52LBG10AA910	HP LIVE STEAM52 LINE DRN TRAP	0115-MEC-033	180	Days
0115-MEC-608	0115-50LBA10AA910	HP STEAM LINE DRN TRAP	0115-MEC-033	180	Days
0115-MEC-609	0115-50LBA10AA930	HP STEAM LINE DRN TRAP	0115-MEC-033	180	Days
0115-MEC-610	0115-05LBG30AA910	EXT STEAM BYP DRN TRAP BEFORE DSH	0115-MEC-033	180	Days
0115-MEC-611	0115-05SCF10AA920	SA HEADER DRAIN TRAP	0115-MEC-033	180	Days
0115-MEC-612	0115-05SCE10AA920	IA HEADER DRAIN TRAP	0115-MEC-033	180	Days
0115-MEC-613	0115-50MAL50AA910	ST GSC DRAIN TRAP	0115-MEC-033	180	Days
0115-MEC-614	0115-50LBA60AA910	LP STEAM LINE DRN TRAP	0115-MEC-033	180	Days
0115-MEC-615	0115-05LBG20AA910	DEA PEGGING STEAM LINE DRN TRAP	0115-MEC-033	180	Days
0115-MEC-616	0115-05LBG20AA920	DEA PEGGING STEAM LINE DRN TRAP	0115-MEC-033	180	Days
0115-MEC-617	0115-05LBG20AA930	DEA PEGGING STEAM LINE DRN TRAP	0115-MEC-033	180	Days
0115-MEC-618	0115-50LBQ20AA910	ST EXT STEAM SILENCER INLET HEADER DRN TRA	0115-MEC-033	180	Days
0115-MEC-619	0115-50LBQ20AA930	ST EXT STEAM SV OUTLET DRN TRAP	0115-MEC-033	180	Days
0115-MEC-620	0115-50LBQ20AA920	ST EXT STEAM DRN TRAP BEFORE DSH	0115-MEC-033	180	Days
0115-MEC-621	0115-50LBQ30AA910	ST EXT STEAM DRN TRAP AFTER DSH	0115-MEC-033	180	Days
0115-MEC-622	0115-05LBQ10AA910	ST EXT STEAM DRN TRAP	0115-MEC-033	180	Days
0115-MEC-623	0115-05LBQ10AA950	ST EXT STEAM DRN TRAP	0115-MEC-033	180	Days
0115-MEC-624	0115-05LBQ10AA960	ST EXT STEAM DRN TRAP	0115-MEC-033	180	Days
0115-MEC-625	0115-05LBQ10AA970	ST EXT STEAM DRN TRAP	0115-MEC-033	180	Days
0115-MEC-626	0115-05LCM10AA920	ST EXT STEAM HEADER DRN TRAP	0115-MEC-033	180	Days
0115-MEC-627	0115-51LBA60AA920	LP STEAM51 LINE DRN TRAP	0115-MEC-033	180	Days
0115-MEC-628	0115-51LBA60AA910	LP STEAM51 LINE DRN TRAP	0115-MEC-033	180	Days
0115-MEC-629	0115-51LBA70AA910	LP STEAM51 BYP LINE DRN TRAP	0115-MEC-033	180	Days
0115-MEC-630	0115-52LBA60AA920	LP STEAM52 LINE DRN TRAP	0115-MEC-033	180	Days
0115-MEC-631	0115-52LBA60AA910	LP STEAM52 LINE DRN TRAP	0115-MEC-033	180	Days
0115-MEC-632	0115-52LBA70AA910	LP STEAM52 BYP LINE DRN TRAP	0115-MEC-033	180	Days
0115-MEC-633	0115-05WS01CR001	OVERHEAD CRANE WORK SHOP BUILDUNG	0115-MEC-043	180	Days
0115-MEC-127	0115-05BRV10AG001	EMERGENCY DIESEL GENERATOR	0115-MEC-004	365	Days
0115-MEC-021	0115-51MBP20AA401	SAFETY VALVE GAS HEATER UNIT S1	0115-MEC-045	365	Days
0115-MEC-022	0115-51EKT10AT401	Safety Valve Gas Heater ECO. Feed Water GT#S1	0115-MEC-045	365	Days
0115-MEC-023	0115-51MBP40AA401	Safety Valve Fuel Gas Heater Scrubber GT#S1	0115-MEC-045	365	Days
0115-MEC-026	0115-51MBP02AA401	SAFETY VALVE GAS SKID FILTER A GT#S1	0115-MEC-045	365	Days
0115-MEC-027	0115-51MBP03AA401	SAFETY VALVE GAS SKID FILTER B GT#S1	0115-MEC-045	365	Days
0115-MEC-048	0115-52MBP20AA401	SAFETY VALVE GAS HEATER UNIT S2	0115-MEC-045	365	Days
0115-MEC-049	0115-52EKT10AT401	Safety Valve Gas Heater ECO. Feed Water GT#S1	0115-MEC-045	365	Days
0115-MEC-050	0115-52MBP40AA401	Safety Valve Fuel Gas Heater Scrubber GT#S1	0115-MEC-045	365	Days
0115-MEC-053	0115-52MBP02AA401	SAFETY VALVE GAS SKID FILTER A GT#S2	0115-MEC-045	365	Days
0115-MEC-054	0115-52MBP03AA401	SAFETY VALVE GAS SKID FILTER B GT#S2	0115-MEC-045	365	Days
0115-MEC-198	0115-51HAC20AA525	HPEC OUTLET DRAIN	0115-MEC-034	365	Days
0115-MEC-199	0115-51HAC20AA526	HPEC OUTLET DRAIN	0115-MEC-034	365	Days
0115-MEC-200	0115-51HAC20AA601	HPEC VENT	0115-MEC-034	365	Days
0115-MEC-201	0115-51HAC20AA602	HPEC VENT	0115-MEC-034	365	Days
0115-MEC-202	0115-51HAC20AA603	HPEC VENT	0115-MEC-034	365	Days
0115-MEC-203	0115-51HAC20AA604	HPEC VENT	0115-MEC-034	365	Days
0115-MEC-204	0115-51HAC20AA605	HPEC VENT	0115-MEC-034	365	Days
0115-MEC-205	0115-51HAC20AA606	HPEC VENT	0115-MEC-034	365	Days
0115-MEC-206	0115-51HAC20AA607	HPEC VENT	0115-MEC-034	365	Days
0115-MEC-207	0115-51HAC20AA608	HPEC VENT	0115-MEC-034	365	Days
0115-MEC-208	0115-51HAC20AA609	HPEC VENT	0115-MEC-034	365	Days
0115-MEC-209	0115-51HAC20AA610	HPEC VENT	0115-MEC-034	365	Days
0115-MEC-210	0115-51HAC20AA611	HPEC VENT	0115-MEC-034	365	Days
0115-MEC-211	0115-51HAC20AA612	HPEC VENT	0115-MEC-034	365	Days

0115-MEC-212	0115-51HAC20AA613	HPEC VENT	0115-MEC-034	365	Days
0115-MEC-213	0115-51HAC50AA001	LPEC TO DA	0115-MEC-034	365	Days
0115-MEC-214	0115-51HAC50AA601	LPEC VENT	0115-MEC-034	365	Days
0115-MEC-215	0115-51HAC50AA602	LPEC VENT	0115-MEC-034	365	Days
0115-MEC-216	0115-51HAC50AA603	LPEC VENT	0115-MEC-034	365	Days
0115-MEC-217	0115-51HAC50AA604	LPEC VENT	0115-MEC-034	365	Days
0115-MEC-218	0115-51HAC50AA802	LP CHEMICAL FEED	0115-MEC-034	365	Days
0115-MEC-219	0115-51HAD10AA601	HP DRUM VENT	0115-MEC-034	365	Days
0115-MEC-220	0115-51HAD10AA701	HP DRUM LEVEL TRANSMITTER	0115-MEC-034	365	Days
0115-MEC-221	0115-51HAD10AA702	HP DRUM LEVEL TRANSMITTER	0115-MEC-034	365	Days
0115-MEC-222	0115-51HAD10AA703	HP DRUM LEVEL TRANSMITTER	0115-MEC-034	365	Days
0115-MEC-223	0115-51HAD10AA704	HP DRUM LEVEL TRANSMITTER	0115-MEC-034	365	Days
0115-MEC-224	0115-51HAD10AA705	HP DRUM LEVEL TRANSMITTER	0115-MEC-034	365	Days
0115-MEC-225	0115-51HAD10AA706	HP DRUM LEVEL TRANSMITTER	0115-MEC-034	365	Days
0115-MEC-226	0115-51HAD10AA707	HP DRUM LEVEL TRANSMITTER	0115-MEC-034	365	Days
0115-MEC-227	0115-51HAD10AA708	HP DRUM LEVEL TRANSMITTER	0115-MEC-034	365	Days
0115-MEC-228	0115-51HAD10AA709	HP DRUM LEVEL GAUGE	0115-MEC-034	365	Days
0115-MEC-229	0115-51HAD10AA710	HP DRUM LEVEL GAUGE	0115-MEC-034	365	Days
0115-MEC-230	0115-51HAD10AA711	HP DRUM LEVEL GAUGE	0115-MEC-034	365	Days
0115-MEC-231	0115-51HAD10AA712	HP DRUM LEVEL GAUGE	0115-MEC-034	365	Days
0115-MEC-232	0115-51HAD10AA713	HP DRUM PRESSURE TRANSMITTER	0115-MEC-034	365	Days
0115-MEC-233	0115-51HAD10AA714	HP DRUM PRESSURE TRANSMITTER	0115-MEC-034	365	Days
0115-MEC-234	0115-51HAD10AA715	HP DRUM PRESSURE TRANSMITTER	0115-MEC-034	365	Days
0115-MEC-235	0115-51HAD10AA716	HP DRUM PRESSURE TRANSMITTER	0115-MEC-034	365	Days
0115-MEC-236	0115-51HAD10AA718	HP DRUM PRESSURE INDICATOR	0115-MEC-034	365	Days
0115-MEC-237	0115-51HAD10AA719	HP DRUM PRESSURE INDICATOR	0115-MEC-034	365	Days
0115-MEC-238	0115-51HAD10AA720	HP DRUM PRESSURE INDICATOR TEST	0115-MEC-034	365	Days
0115-MEC-239	0115-51HAD10AA801	HP DRUM SAMPLE	0115-MEC-034	365	Days
0115-MEC-240	0115-51HAD10AA802	HP DRUM SAMPLE	0115-MEC-034	365	Days
0115-MEC-241	0115-51HAD50AAS01	LP CONTINUOUS BLOWDOWN (ISOLATION)	0115-MEC-034	365	Days
0115-MEC-242	0115-51HAD50AAS02	LP WATER COLUMN DRAIN	0115-MEC-034	365	Days
0115-MEC-243	0115-51HAD50AAS03	LP WATER COLUMN DRAIN	0115-MEC-034	365	Days
0115-MEC-244	0115-51HAD50AAS04	LP LEVEL GAUGE DRAIN	0115-MEC-034	365	Days
0115-MEC-245	0115-51HAD50AAS05	LP INTERMITTENT BLOWDOWN	0115-MEC-034	365	Days
0115-MEC-246	0115-51HAD50AA601	LP DRUM VENT	0115-MEC-034	365	Days
0115-MEC-247	0115-51HAD50AA701	LP DRUM LEVEL TRANSMITTER	0115-MEC-034	365	Days
0115-MEC-248	0115-51HAD50AA702	LP DRUM LEVEL TRANSMITTER	0115-MEC-034	365	Days
0115-MEC-249	0115-51HAD50AA703	LP DRUM LEVEL TRANSMITTER	0115-MEC-034	365	Days
0115-MEC-250	0115-51HAD50AA704	LP DRUM LEVEL TRANSMITTER	0115-MEC-034	365	Days
0115-MEC-251	0115-51HAD50AA705	LP DRUM LEVEL GAUGE	0115-MEC-034	365	Days
0115-MEC-252	0115-51HAD50AA706	LP DRUM LEVEL GAUGE	0115-MEC-034	365	Days
0115-MEC-253	0115-51HAD50AA708	LP DRUM PRESSURE TRANSMITTER	0115-MEC-034	365	Days
0115-MEC-254	0115-51HAD50AA709	LP DRUM LEVEL TRANSMITTER	0115-MEC-034	365	Days
0115-MEC-255	0115-51HAD50AA710	LP DRUM PRESSURE TRANSMITTER	0115-MEC-034	365	Days
0115-MEC-256	0115-51HAD50AA711	LP DRUM LEVEL TRANSMITTER	0115-MEC-034	365	Days
0115-MEC-257	0115-51HAD50AA712	LP DRUM PRESSURE GAUGE	0115-MEC-034	365	Days
0115-MEC-258	0115-51HAD50AA714	LP DRUM PRESSURE TEST	0115-MEC-034	365	Days
0115-MEC-259	0115-51HAD50AA801	LP DRUM SAMPLE	0115-MEC-034	365	Days
0115-MEC-260	0115-51HAD50AA802	LP DRUM SAMPLE	0115-MEC-034	365	Days
0115-MEC-261	0115-51LAE10AA003	HP ATTEMP SPRAYWATER	0115-MEC-034	365	Days
0115-MEC-262	0115-51LAE10AA010	HRSG1 HP DSH SPR LINE ISOL VLV	0115-MEC-034	365	Days
0115-MEC-263	0115-51LAE10AA502	HP ATTEMP SPRAYWATER DRAIN	0115-MEC-034	365	Days
0115-MEC-264	0115-51LAE10AA503	HP ATTEMP SPRAYWATER DRAIN	0115-MEC-034	365	Days
0115-MEC-265	0115-51LAE10AA504	HP ATTEMP SPRAYWATER STRAINER DRAIN	0115-MEC-034	365	Days
0115-MEC-266	0115-51LAE10AA505	HP ATTEMP SPRAYWATER STRAINER DRAIN	0115-MEC-034	365	Days
0115-MEC-267	0115-51LAE10AA701	HP ATTEMP SPRAYWATER FLOW TRANSMITTER	0115-MEC-034	365	Days
0115-MEC-268	0115-51LAE10AA702	HP ATTEMP SPRAYWATER FLOW TRANSMITTER	0115-MEC-034	365	Days
0115-MEC-269	0115-51LAE10AA703	HP ATTEMP SPRAYWATER FLOW TRANSMITTER	0115-MEC-034	365	Days
0115-MEC-270	0115-51LAE10AA704	HP ATTEMP SPRAYWATER FLOW TRANSMITTER	0115-MEC-034	365	Days
0115-MEC-271	0115-51LAE10AA705	HP ATTEMP SPRAYWATER PRESS IND TRANSMITTER	0115-MEC-034	365	Days
0115-MEC-272	0115-51LAE10AA706	HP ATTEMP SPRAYWATER PRESS IND TRANSMITTER	0115-MEC-034	365	Days
0115-MEC-273	0115-51LAE10AA707	HP ATTEMP SPRAYWATER STRAINER PRESS DIFF	0115-MEC-034	365	Days
0115-MEC-274	0115-51LAE10AA708	HP ATTEMP SPRAYWATER STRAINER PRESS DIFF	0115-MEC-034	365	Days
0115-MEC-275	0115-51LAE10AA709	HP ATTEMP SPRAYWATER STRAINER PRESS DIFF	0115-MEC-034	365	Days
0115-MEC-276	0115-51HAH10AC001	HRSG 51	0115-MEC-034	365	Days
0115-MEC-277	0115-51HAH10AA701	HP ATTEMP PRESS IND TRANSMITTER	0115-MEC-034	365	Days
0115-MEC-278	0115-51HAH10AA702	HP ATTEMP PRESS IND TRANSMITTER	0115-MEC-034	365	Days
0115-MEC-279	0115-51HAH10AC001	HRSG 51	0115-MEC-041	365	Days
0115-MEC-282	0115-51HAD10AA401	HP DRUM SAFETY VALVE #1	0115-MEC-045	365	Days
0115-MEC-283	0115-51HAD50AA401	LP DRUM SAFETY VALVE #1	0115-MEC-045	365	Days
0115-MEC-284	0115-51HAD50AA402	LP DRUM SAFETY VALVE #2	0115-MEC-045	365	Days
0115-MEC-285	0115-51HAH10AA401	HPSH SAFETY VALVE 51	0115-MEC-045	365	Days
0115-MEC-286	0115-51HAH50AA401	LPSH SAFETY VALVE 51	0115-MEC-045	365	Days
0115-MEC-287	0115-51LAB10AA401	HP FW INLET SAFETY VALVE 51	0115-MEC-045	365	Days
0115-MEC-288	0115-51LAB50AA401	LP FW INLET SAFETY VALVE 51	0115-MEC-045	365	Days
0115-MEC-289	0115-51HAC20AA025	FUEL GAS PREHEATER GT#51	0115-MEC-034	365	Days
0115-MEC-290	0115-51HAC20AA026	FUEL GAS PREHEATER GT#51	0115-MEC-034	365	Days
0115-MEC-291	0115-51HAC20AA518	HPEC FUEL GAS PREHEATER DRAIN GT#51	0115-MEC-034	365	Days
0115-MEC-292	0115-51HAC20AA501	HPEC DRAIN	0115-MEC-034	365	Days
0115-MEC-293	0115-51HAC20AA502	HPEC DRAIN	0115-MEC-034	365	Days
0115-MEC-294	0115-51HAC20AA503	HPEC DRAIN	0115-MEC-034	365	Days
0115-MEC-295	0115-51HAC20AA504	HPEC DRAIN	0115-MEC-034	365	Days
0115-MEC-296	0115-51HAC20AA505	HPEC DRAIN	0115-MEC-034	365	Days
0115-MEC-297	0115-51HAC20AA506	HPEC DRAIN	0115-MEC-034	365	Days
0115-MEC-298	0115-51HAC20AA507	HPEC DRAIN	0115-MEC-034	365	Days
0115-MEC-299	0115-51HAC20AA508	HPEC DRAIN	0115-MEC-034	365	Days
0115-MEC-300	0115-51HAC20AA509	HPEC DRAIN	0115-MEC-034	365	Days
0115-MEC-301	0115-51HAC20AA510	HPEC DRAIN	0115-MEC-034	365	Days
0115-MEC-302	0115-51HAC20AA511	HPEC DRAIN	0115-MEC-034	365	Days
0115-MEC-303	0115-51HAC20AA512	HPEC DRAIN	0115-MEC-034	365	Days
0115-MEC-304	0115-51HAC20AA513	HPEC DRAIN	0115-MEC-034	365	Days
0115-MEC-305	0115-51HAC20AA514	HPEC DRAIN COLLECTION	0115-MEC-034	365	Days
0115-MEC-306	0115-51HAC20AA515	HPEC DRAIN COLLECTION	0115-MEC-034	365	Days
0115-MEC-307	0115-51HAC20BR516	HPEC DRAIN COLLECTION	0115-MEC-034	365	Days
0115-MEC-308	0115-51HAC50AAS01	LPEC DRAIN	0115-MEC-034	365	Days
0115-MEC-309	0115-51HAC50AAS02	LPEC DRAIN	0115-MEC-034	365	Days
0115-MEC-310	0115-51HAC50AAS03	LPEC DRAIN	0115-MEC-034	365	Days
0115-MEC-311	0115-51HAC50AAS04	LPEC DRAIN	0115-MEC-034	365	Days
0115-MEC-312	0115-51HAC50AAS05	LPEC DRAIN COLLECTION	0115-MEC-034	365	Days
0115-MEC-313	0115-51HAD10AAS01	HP CONTINUOUS BLOWDOWN (ISOLATION)	0115-MEC-034	365	Days
0115-MEC-314	0115-51HAD10AAS02	HP DRUM WATER COLUMN DRAIN	0115-MEC-034	365	Days
0115-MEC-315	0115-51HAD10AAS03	HP DRUM WATER COLUMN DRAIN	0115-MEC-034	365	Days
0115-MEC-316	0115-51HAD10AAS04	HP DRUM LEVEL GAUGE DRAIN	0115-MEC-034	365	Days
0115-MEC-317	0115-51HAD10AAS05	HP INTERMITTENT BLOWDOWN	0115-MEC-034	365	Days
0115-MEC-318	0115-51HAH10AA002	HPSH MAIN STEAM STOP VALVE	0115-MEC-034	365	Days
0115-MEC-319	0115-51HAH10AA103	HPSH START UP VENT ISOLATION	0115-MEC-034	365	Days
0115-MEC-320	0115-51HAH10AAS04	HPSH OUTLET FREEBLOW DRAIN	0115-MEC-034	365	Days
0115-MEC-321	0115-51HAH10AAS05	HPSH OUTLET FREEBLOW DRAIN	0115-MEC-034	365	Days
0115-MEC-322	0115-51HAH10AA703	HPSH OUTLET PRESS IND	0115-MEC-034	365	Days
0115-MEC-323	0115-51HAH10AA704	HPSH OUTLET PRESS IND	0115-MEC-034	365	Days
0115-MEC-324	0115-51HAH10AA705	HPSH OUTLET PRESS TRANS	0115-MEC-034	365	Days
0115-MEC-325	0115-51HAH10AA804	HPSH TO STEAM TURBINE GLAND SEAL	0115-MEC-034	365	Days
0115-MEC-326	0115-51HAH50AA002	LPSH MAIN STEAM STOP VALVE	0115-MEC-034	365	Days
0115-MEC-327	0115-51HAH50AAS02	LPSH OUTLET FREEBLOW DRAIN	0115-MEC-034	365	Days
0115-MEC-328	0115-51HAH50AA701	LPSH OUTLET PRESSURE GAUGE	0115-MEC-034	365	Days
0115-MEC-329	0115-51HAH50AA703	LPSH OUTLET PRESSURE TRANSMITTER	0115-MEC-034	365	Days
0115-MEC-330	0115-51LAB10AAS01	HPEC INLET DRAIN	0115-MEC-034	365	Days
0115-MEC-331	0115-51LAB10AAS02	HPEC INLET DRAIN	0115-MEC-034	365	Days
0115-MEC-332	0115-51LAB10AAS03	HPEC INLET DRAIN	0115-MEC-034	365	Days
0115-MEC-333	0115-51LAB10AAS04	HPEC INLET DRAIN	0115-MEC-034	365	Days
0115-MEC-334	0115-51LAB10AAS05	HPEC INLET DRAIN	0115-MEC-034	365	Days
0115-MEC-335	0115-51LAB10AAS06	HPEC INLET DRAIN	0115-MEC-034	365	Days
0115-MEC-336	0115-51LAB10AA705	HPEC INLET FEED PRESS IND	0115-MEC-034	365	Days
0115-MEC-337	0115-51LAB10AA706	HPEC INLET FEED PRESS IND	0115-MEC-034	365	Days
0115-MEC-338	0115-51LAB10AA707	HPEC INLET FEED PRESS TRANS	0115-MEC-034	365	Days
0115-MEC-339	0115-51LAB50AAS01	LP FW INLET DRAIN	0115-MEC-034	365	Days
0115-MEC-340	0115-51LAB50AAS03	LP FW INLET DRAIN	0115-MEC-034	365	Days
0115-MEC-341	0115-51LAB50AAS05	LP FW INLET DRAIN	0115-MEC-034	365	Days
0115-MEC-342	0115-51LAB50AAS06	LP FW INLET DRAIN	0115-MEC-034	365	Days
0115-MEC-343	0115-51LAB50AA701	LP FW FLOW TRANSMITTER	0115-MEC-034	365	Days
0115-MEC-344	0115-51LAB50AA702	LP FW FLOW TRANSMITTER	0115-MEC-034	365	Days
0115-MEC-345	0115-51LAB50AA703	LP FW INLET PRESSURE GAUGE	0115-MEC-034	365	Days
0115-MEC-346	0115-51LAB50AA704	LP FW INLET PRESSURE GAUGE	0115-MEC-034	365	Days
0115-MEC-347	0115-51LAB50AA705	LP FW INLET PRESSURE TRANSMITTER	0115-MEC-034	365	Days
0115-MEC-348	0115-51LCQ10AAS01	BD TANK DRAIN	0115-MEC-034	365	Days
0115-MEC-349	0115-51LCQ10AAS02	BD TANK DRAIN	0115-MEC-034	365	Days
0115-MEC-350	0115-51LCQ10AA701	BD TANK LEVEL GAUGE	0115-MEC-034	365	Days
0115-MEC-351	0115-51LCQ10AA702	BD TANK LEVEL GAUGE	0115-MEC-034	365	Days
0115-MEC-352	0115-51LCQ10AA703	BD TANK PRESSURE INDICATOR	0115-MEC-034	365	Days
0115-MEC-353	0115-51LCQ10AA704	BD TANK LEVEL GAUGE	0115-MEC-034	365	Days
0115-MEC-354	0115-51LCQ10AA705	BD TANK LEVEL GAUGE	0115-MEC-034	365	Days
0115-MEC-355	0115-51LCQ11AAS01	BD TANK LEVEL GAUGE DRAIN	0115-MEC-034	365	Days
0115-MEC-356	0115-51LCQ11AAS12	BD TANK LEVEL GAUGE DRAIN	0115-MEC-034	365	Days
0115-MEC-357	0115-52HAC20AAS25	HPEC OUTLET DRAIN	0115-MEC-034	365	Days
0115-MEC-358	0115-52HAC20AAS26	HPEC OUTLET DRAIN	0115-MEC-034	365	Days

0115-MEC-359	0115-52HAC20AA601	HPEC VENT	0115-MEC-034	365	Days
0115-MEC-360	0115-52HAC20AA602	HPEC VENT	0115-MEC-034	365	Days
0115-MEC-361	0115-52HAC20AA603	HPEC VENT	0115-MEC-034	365	Days
0115-MEC-362	0115-52HAC20AA604	HPEC VENT	0115-MEC-034	365	Days
0115-MEC-363	0115-52HAC20AA605	HPEC VENT	0115-MEC-034	365	Days
0115-MEC-364	0115-52HAC20AA606	HPEC VENT	0115-MEC-034	365	Days
0115-MEC-365	0115-52HAC20AA607	HPEC VENT	0115-MEC-034	365	Days
0115-MEC-366	0115-52HAC20AA608	HPEC VENT	0115-MEC-034	365	Days
0115-MEC-367	0115-52HAC20AA609	HPEC VENT	0115-MEC-034	365	Days
0115-MEC-368	0115-52HAC20AA610	HPEC VENT	0115-MEC-034	365	Days
0115-MEC-369	0115-52HAC20AA611	HPEC VENT	0115-MEC-034	365	Days
0115-MEC-370	0115-52HAC20AA612	HPEC VENT	0115-MEC-034	365	Days
0115-MEC-371	0115-52HAC20AA613	HPEC VENT	0115-MEC-034	365	Days
0115-MEC-372	0115-52HAC50AA001	LPEC TO DA	0115-MEC-034	365	Days
0115-MEC-373	0115-52HAC50AA601	LPEC VENT	0115-MEC-034	365	Days
0115-MEC-374	0115-52HAC50AA602	LPEC VENT	0115-MEC-034	365	Days
0115-MEC-375	0115-52HAC50AA603	LPEC VENT	0115-MEC-034	365	Days
0115-MEC-376	0115-52HAC50AA604	LPEC VENT	0115-MEC-034	365	Days
0115-MEC-377	0115-52HAC50AA802	LP CHEMICAL FEED	0115-MEC-034	365	Days
0115-MEC-378	0115-52HAD10AA601	HP DRUM VENT	0115-MEC-034	365	Days
0115-MEC-379	0115-52HAD10AA701	HP DRUM LEVEL TRANSMITTER	0115-MEC-034	365	Days
0115-MEC-380	0115-52HAD10AA702	HP DRUM LEVEL TRANSMITTER	0115-MEC-034	365	Days
0115-MEC-381	0115-52HAD10AA703	HP DRUM LEVEL TRANSMITTER	0115-MEC-034	365	Days
0115-MEC-382	0115-52HAD10AA704	HP DRIUM LEVEL TRANSMITTER	0115-MEC-034	365	Days
0115-MEC-383	0115-52HAD10AA705	HP DRUM LEVEL TRANSMITTER	0115-MEC-034	365	Days
0115-MEC-384	0115-52HAD10AA706	HP DRUM LEVEL TRANSMITTER	0115-MEC-034	365	Days
0115-MEC-385	0115-52HAD10AA707	HP DRUM LEVEL TRANSMITTER	0115-MEC-034	365	Days
0115-MEC-386	0115-52HAD10AA708	HP DRUM LEVEL TRANSMITTER	0115-MEC-034	365	Days
0115-MEC-387	0115-52HAD10AA709	HP DRIUM LEVEL GAUGE	0115-MEC-034	365	Days
0115-MEC-388	0115-52HAD10AA710	HP DRUM LEVEL GAUGE	0115-MEC-034	365	Days
0115-MEC-389	0115-52HAD10AA711	HP DRUM LEVEL GAUGE	0115-MEC-034	365	Days
0115-MEC-390	0115-52HAD10AA712	HP DRUM LEVEL GAUGE	0115-MEC-034	365	Days
0115-MEC-391	0115-52HAD10AA713	HP DRUM PRESSURE TRANSMITTER	0115-MEC-034	365	Days
0115-MEC-392	0115-52HAD10AA714	HP DRUM PRESSURE TRANSMITTER	0115-MEC-034	365	Days
0115-MEC-393	0115-52HAD10AA715	HP DRIUM PRESSURE TRANSMITTER	0115-MEC-034	365	Days
0115-MEC-394	0115-52HAD10AA716	HP DRUM PRESSURE TRANSMITTER	0115-MEC-034	365	Days
0115-MEC-395	0115-52HAD10AA718	HP DRUM PRESSURE INDICATOR	0115-MEC-034	365	Days
0115-MEC-396	0115-52HAD10AA719	HP DRUM PRESSURE INDICATOR	0115-MEC-034	365	Days
0115-MEC-397	0115-52HAD10AA720	HP DRUM PRESSURE INDICATOR TEST	0115-MEC-034	365	Days
0115-MEC-398	0115-52HAD10AA801	HP DRIUM SAMPLE	0115-MEC-034	365	Days
0115-MEC-399	0115-52HAD10AA802	HP DRUM SAMPLE	0115-MEC-034	365	Days
0115-MEC-400	0115-52HAD50AA501	LP CONTINUOUS BLOWDOWN (ISOLATION)	0115-MEC-034	365	Days
0115-MEC-401	0115-52HAD50AA502	LP WATER COLUMN DRAIN	0115-MEC-034	365	Days
0115-MEC-402	0115-52HAD50AA503	LP WATER COLUMN DRAIN	0115-MEC-034	365	Days
0115-MEC-403	0115-52HAD50AA504	LP LEVEL GAUGE DRAIN	0115-MEC-034	365	Days
0115-MEC-404	0115-52HAD50AA505	LP INTERMITTENT BLOWDOWN	0115-MEC-034	365	Days
0115-MEC-405	0115-52HAD50AA601	LP DRUM VENT	0115-MEC-034	365	Days
0115-MEC-406	0115-52HAD50AA701	LP DRUM LEVEL TRANSMITTER	0115-MEC-034	365	Days
0115-MEC-407	0115-52HAD50AA702	LP DRUM LEVEL TRANSMITTER	0115-MEC-034	365	Days
0115-MEC-408	0115-52HAD50AA703	LP DRUM LEVEL TRANSMITTER	0115-MEC-034	365	Days
0115-MEC-409	0115-52HAD50AA704	LP DRUM LEVEL TRANSMITTER	0115-MEC-034	365	Days
0115-MEC-410	0115-52HAD50AA705	LP DRUM LEVEL GAUGE	0115-MEC-034	365	Days
0115-MEC-411	0115-52HAD50AA706	LP DRUM LEVEL GAUGE	0115-MEC-034	365	Days
0115-MEC-412	0115-52HAD50AA708	LP DRUM PRESSURE TRANSMITTER	0115-MEC-034	365	Days
0115-MEC-413	0115-52HAD50AA709	LP DRUM LEVEL TRANSMITTER	0115-MEC-034	365	Days
0115-MEC-414	0115-52HAD50AA710	LP DRUM PRESSURE TRANSMITTER	0115-MEC-034	365	Days
0115-MEC-415	0115-52HAD50AA711	LP DRUM LEVEL TRANSMITTER	0115-MEC-034	365	Days
0115-MEC-416	0115-52HAD50AA712	LP DRUM PRESSURE GAUGE	0115-MEC-034	365	Days
0115-MEC-417	0115-52HAD50AA714	LP DRUM PRESSURE TEST	0115-MEC-034	365	Days
0115-MEC-418	0115-52HAD50AA801	LP DRUM SAMPLE	0115-MEC-034	365	Days
0115-MEC-419	0115-52HAD50AA802	LP DRUM SAMPLE	0115-MEC-034	365	Days
0115-MEC-420	0115-52LAE10AA003	HP ATTEMP SPRAYWATER	0115-MEC-034	365	Days
0115-MEC-421	0115-52LAE10AA010	HRSG2 HP DSH SPR LINE ISOL VLV	0115-MEC-034	365	Days
0115-MEC-422	0115-52LAE10AA502	HP ATTEMP SPRAYWATER DRAIN	0115-MEC-034	365	Days
0115-MEC-423	0115-52LAE10AA503	HP ATTEMP SPRAYWATER DRAIN	0115-MEC-034	365	Days
0115-MEC-424	0115-52LAE10AA504	HP ATTEMP SPRAYWATER STRAINER DRAIN	0115-MEC-034	365	Days
0115-MEC-425	0115-52LAE10AA505	HP ATTEMP SPRAYWATER STRAINER DRAIN	0115-MEC-034	365	Days
0115-MEC-426	0115-52LAE10AA701	HP ATTEMP SPRAYWATER FLOW TRANSMITTER	0115-MEC-034	365	Days
0115-MEC-427	0115-52LAE10AA702	HP ATTEMP SPRAYWATER FLOW TRANSMITTER	0115-MEC-034	365	Days
0115-MEC-428	0115-52LAE10AA703	HP ATTEMP SPRAYWATER FLOW TRANSMITTER	0115-MEC-034	365	Days
0115-MEC-429	0115-52LAE10AA704	HP ATTEMP SPRAYWATER FLOW TRANSMITTER	0115-MEC-034	365	Days
0115-MEC-430	0115-52LAE10AA705	HP ATTEMP SPRAYWATER PRESS IND TRANSMITTER	0115-MEC-034	365	Days
0115-MEC-431	0115-52LAE10AA706	HP ATTEMP SPRAYWATER PRESS IND TRANSMITTER	0115-MEC-034	365	Days
0115-MEC-432	0115-52LAE10AA707	HP ATTEMP SPRAYWATER STRAINER PRESS DIFF	0115-MEC-034	365	Days
0115-MEC-433	0115-52LAE10AA708	HP ATTEMP SPRAYWATER STRAINER PRESS DIFF	0115-MEC-034	365	Days
0115-MEC-434	0115-52LAE10AA709	HP ATTEMP SPRAYWATER STRAINER PRESS DIFF	0115-MEC-034	365	Days
0115-MEC-435	0115-52HAH10AC001	HRSG 52	0115-MEC-034	365	Days
0115-MEC-436	0115-52HAH10AA701	HP ATTEMP PRESS IND TRANSMITTER	0115-MEC-034	365	Days
0115-MEC-437	0115-52HAH10AA702	HP ATTEMP PRESS IND TRANSMITTER	0115-MEC-034	365	Days
0115-MEC-438	0115-52HAH10AC001	HRSG 52	0115-MEC-041	365	Days
0115-MEC-440	0115-52HAD10AA401	HP DRUM SAFETY VALVE #1	0115-MEC-045	365	Days
0115-MEC-441	0115-52HAD50AA401	LP DRUM SAFETY VALVE #1	0115-MEC-045	365	Days
0115-MEC-442	0115-52HAD50AA402	LP DRUM SAFETY VALVE #2	0115-MEC-045	365	Days
0115-MEC-443	0115-52HAH10AA401	HPSH SAFETY VALVE 52	0115-MEC-045	365	Days
0115-MEC-444	0115-52HAH50AA401	LPSH SAFETY VALVE 52	0115-MEC-045	365	Days
0115-MEC-445	0115-52LAB10AA401	HP FW INLET SAFETY VALVE 52	0115-MEC-045	365	Days
0115-MEC-446	0115-52LAB50AA401	LP FW INLET SAFETY VALVE 52	0115-MEC-045	365	Days
0115-MEC-447	0115-52HAC20AA025	FUEL GAS PREHEATER GT#52	0115-MEC-034	365	Days
0115-MEC-448	0115-52HAC20AA026	FUEL GAS PREHEATER GT#52	0115-MEC-034	365	Days
0115-MEC-449	0115-52HAC20AA518	HPEC FUEL GAS PREHEATER DRAIN GT#52	0115-MEC-034	365	Days
0115-MEC-450	0115-52HAC20AA501	HPEC DRAIN	0115-MEC-034	365	Days
0115-MEC-451	0115-52HAC20AA502	HPEC DRAIN	0115-MEC-034	365	Days
0115-MEC-452	0115-52HAC20AA503	HPEC DRAIN	0115-MEC-034	365	Days
0115-MEC-453	0115-52HAC20AA504	HPEC DRAIN	0115-MEC-034	365	Days
0115-MEC-454	0115-52HAC20AA505	HPEC DRAIN	0115-MEC-034	365	Days
0115-MEC-455	0115-52HAC20AA506	HPEC DRAIN	0115-MEC-034	365	Days
0115-MEC-456	0115-52HAC20AA507	HPEC DRAIN	0115-MEC-034	365	Days
0115-MEC-457	0115-52HAC20AA508	HPEC DRAIN	0115-MEC-034	365	Days
0115-MEC-458	0115-52HAC20AA509	HPEC DRAIN	0115-MEC-034	365	Days
0115-MEC-459	0115-52HAC20AA510	HPEC DRAIN	0115-MEC-034	365	Days
0115-MEC-460	0115-52HAC20AA511	HPEC DRAIN	0115-MEC-034	365	Days
0115-MEC-461	0115-52HAC20AA512	HPEC DRAIN	0115-MEC-034	365	Days
0115-MEC-462	0115-52HAC20AA513	HPEC DRAIN	0115-MEC-034	365	Days
0115-MEC-463	0115-52HAC20AA514	HPEC DRAIN COLLECTION	0115-MEC-034	365	Days
0115-MEC-464	0115-52HAC20AA515	HPEC DRAIN COLLECTION	0115-MEC-034	365	Days
0115-MEC-465	0115-52HAC20BR516	HPEC DRAIN COLLECTION	0115-MEC-034	365	Days
0115-MEC-466	0115-52HAC50AA501	LPEC DRAIN	0115-MEC-034	365	Days
0115-MEC-467	0115-52HAC50AA502	LPEC DRAIN	0115-MEC-034	365	Days
0115-MEC-468	0115-52HAC50AA503	LPEC DRAIN	0115-MEC-034	365	Days
0115-MEC-469	0115-52HAC50AA504	LPEC DRAIN	0115-MEC-034	365	Days
0115-MEC-470	0115-52HAC50AA505	LPEC DRAIN COLLECTION	0115-MEC-034	365	Days
0115-MEC-471	0115-52HAD10AA501	HP CONTINUOUS BLOWDOWN (ISOLATION)	0115-MEC-034	365	Days
0115-MEC-472	0115-52HAD10AA502	HP DRUM WATER COLUMN DRAIN	0115-MEC-034	365	Days
0115-MEC-473	0115-52HAD10AA503	HP DRUM WATER COLUMN DRAIN	0115-MEC-034	365	Days
0115-MEC-474	0115-52HAD10AA504	HP DRUM LEVEL GAUGE DRAIN	0115-MEC-034	365	Days
0115-MEC-475	0115-52HAD10AA505	HP INTERMITTENT BLOWDOWN	0115-MEC-034	365	Days
0115-MEC-476	0115-52HAH10AA002	HPSH MAIN STEAM STOP VALVE	0115-MEC-034	365	Days
0115-MEC-477	0115-52HAH10AA103	HPSH START UP VENT ISOLATION	0115-MEC-034	365	Days
0115-MEC-478	0115-52HAH10AA504	HPSH OUTLET FREEBLOW DRAIN	0115-MEC-034	365	Days
0115-MEC-479	0115-52HAH10AA505	HPSH OUTLET FREEBLOW DRAIN	0115-MEC-034	365	Days
0115-MEC-480	0115-52HAH10AA703	HPSH OUTLET PRESS IND	0115-MEC-034	365	Days
0115-MEC-481	0115-52HAH10AA704	HPSH OUTLET PRESS IND	0115-MEC-034	365	Days
0115-MEC-482	0115-52HAH10AA705	HPSH OUTLET PRESS TRANS	0115-MEC-034	365	Days
0115-MEC-483	0115-52HAH10AA804	HPSH TO STEAM TURBINE GLAND SEAL	0115-MEC-034	365	Days
0115-MEC-484	0115-52HAH50AA002	LPSH MAIN STEAM STOP VALVE	0115-MEC-034	365	Days
0115-MEC-485	0115-52HAH50AA502	LPSH OUTLET FREEBLOW DRAIN	0115-MEC-034	365	Days
0115-MEC-486	0115-52HAH50AA701	LPSH OUTLET PRESSURE GAUGE	0115-MEC-034	365	Days
0115-MEC-487	0115-52HAH50AA703	LPSH OUTLET PRESSURE TRANSMITTER	0115-MEC-034	365	Days
0115-MEC-488	0115-52LAB10AA501	HPEC INLET DRAIN	0115-MEC-034	365	Days
0115-MEC-489	0115-52LAB10AA502	HPEC INLET DRAIN	0115-MEC-034	365	Days
0115-MEC-490	0115-52LAB10AA503	HPEC INLET DRAIN	0115-MEC-034	365	Days
0115-MEC-491	0115-52LAB10AA504	HPEC INLET DRAIN	0115-MEC-034	365	Days
0115-MEC-492	0115-52LAB10AA505	HPEC INLET DRAIN	0115-MEC-034	365	Days
0115-MEC-493	0115-52LAB10AA506	HPEC INLET DRAIN	0115-MEC-034	365	Days
0115-MEC-494	0115-52LAB10AA705	HPEC INLET FEED PRESS IND	0115-MEC-034	365	Days
0115-MEC-495	0115-52LAB10AA706	HPEC INLET FEED PRESS IND	0115-MEC-034	365	Days
0115-MEC-496	0115-52LAB10AA707	HPEC INLET FEED PRESS TRANS	0115-MEC-034	365	Days
0115-MEC-497	0115-52LAB50AA501	LP FW INLET DRAIN	0115-MEC-034	365	Days
0115-MEC-498	0115-52LAB50AA503	LP FW INLET DRAIN	0115-MEC-034	365	Days
0115-MEC-499	0115-52LAB50AA505	LP FW INLET DRAIN	0115-MEC-034	365	Days
0115-MEC-500	0115-52LAB50AA506	LP FW INLET DRAIN	0115-MEC-034	365	Days
0115-MEC-501	0115-52LAB50AA701	LP FW FLOW TRANSMITTER	0115-MEC-034	365	Days
0115-MEC-502	0115-52LAB50AA702	LP FW FLOW TRANSMITTER	0115-MEC-034	365	Days
0115-MEC-503	0115-52LAB50AA703	LP FW INLET PRESSURE GAUGE	0115-MEC-034	365	Days
0115-MEC-504	0115-52LAB50AA704	LP FW INLET PRESSURE GAUGE	0115-MEC-034	365	Days

0115-MEC-505	0115-52LAB50AA705	LP FW INLET PRESSURE TRANSMITTER	0115-MEC-034	365	Days																																																				
0115-MEC-506	0115-52LCQ10AA501	BD TANK DRAIN	0115-MEC-034	365	Days																																																				
0115-MEC-507	0115-52LCQ10AA502	BD TANK DRAIN	0115-MEC-034	365	Days																																																				
0115-MEC-508	0115-52LCQ10AA701	BD TANK LEVEL GAUGE	0115-MEC-034	365	Days																																																				
0115-MEC-509	0115-52LCQ10AA702	BD TANK LEVEL GAUGE	0115-MEC-034	365	Days																																																				
0115-MEC-510	0115-52LCQ10AA703	BD TANK PRESSURE INDICATOR	0115-MEC-034	365	Days																																																				
0115-MEC-511	0115-52LCQ10AA704	BD TANK LEVEL GAUGE	0115-MEC-034	365	Days																																																				
0115-MEC-512	0115-52LCQ10AA705	BD TANK LEVEL GAUGE	0115-MEC-034	365	Days																																																				
0115-MEC-513	0115-52LCQ11AA501	BD TANK LEVEL GAUGE DRAIN	0115-MEC-034	365	Days																																																				
0115-MEC-514	0115-52LCQ11AA512	BD TANK LEVEL GAUGE DRAIN	0115-MEC-034	365	Days																																																				
0115-MEC-515	0115-05LAA10AA004	LPEC TO DA	0115-MEC-034	365	Days																																																				
0115-MEC-516	0115-05LAA10AA102	DA VENT	0115-MEC-034	365	Days																																																				
0115-MEC-517	0115-05LAA10AA201	LPEC TO DA CONTROL VALVE	0115-MEC-034	365	Days																																																				
0115-MEC-518	0115-05LAA10AA501	LPEC TO DA DRAIN	0115-MEC-034	365	Days																																																				
0115-MEC-519	0115-05LAA10AA505	DA LEVEL GAUGE DRAIN	0115-MEC-034	365	Days																																																				
0115-MEC-520	0115-05LAA10AA602	DA N2	0115-MEC-034	365	Days																																																				
0115-MEC-521	0115-05LAA10AA701	LPEC TO DA FLOW TRANMITTER	0115-MEC-034	365	Days																																																				
0115-MEC-522	0115-05LAA10AA702	LPEC TO DA FLOW TRANMITTER	0115-MEC-034	365	Days																																																				
0115-MEC-523	0115-05LAA10AA703	DA LEVEL GAUGE	0115-MEC-034	365	Days																																																				
0115-MEC-524	0115-05LAA10AA704	DA LEVEL GAUGE	0115-MEC-034	365	Days																																																				
0115-MEC-525	0115-05LAA10AA705	DA LEVEL TRANSMITTER	0115-MEC-034	365	Days																																																				
0115-MEC-526	0115-05LAA10AA706	DA LEVEL TRANSMITTER	0115-MEC-034	365	Days																																																				
0115-MEC-527	0115-05LAA10AA707	DA PRESSURE INDICATOR	0115-MEC-034	365	Days																																																				
0115-MEC-528	0115-05LAA10AA708	DA PRESSURE TRANSMITTER	0115-MEC-034	365	Days																																																				
0115-MEC-529	0115-05LAA10AA709	DA LEVEL TRANSMITTER	0115-MEC-034	365	Days																																																				
0115-MEC-530	0115-05LAA10AA710	DA LEVEL TRANSMITTER	0115-MEC-034	365	Days																																																				
0115-MEC-531	0115-05LAB24AA007	HP PUMP MINIMUM FLOW TO DA	0115-MEC-034	365	Days																																																				
0115-MEC-532	0115-05LAB25AA007	HP PUMP MINIMUM FLOW TO DA	0115-MEC-034	365	Days																																																				
0115-MEC-533	0115-05LAB26AA007	HP PUMP MINIMUM FLOW TO DA	0115-MEC-034	365	Days																																																				
0115-MEC-534	0115-05LAB54AA010	LP PUMP MINIMUM FLOW TO DA	0115-MEC-034	365	Days																																																				
0115-MEC-535	0115-05LAB55AA010	LP PUMP MINIMUM FLOW TO DA	0115-MEC-034	365	Days																																																				
0115-MEC-536	0115-05LAB56AA010	LP PUMP MINIMUM FLOW TO DA	0115-MEC-034	365	Days																																																				
0115-MEC-537	0115-05LBG20AA006	CUSTOMER LP STEAM TO DA	0115-MEC-034	365	Days																																																				
0115-MEC-538	0115-05LCA50AA502	CONDENSATE TO DA DRAIN	0115-MEC-034	365	Days																																																				
0115-MEC-539	0115-05LCA50AA503	CONDENSATE TO DA DRAIN	0115-MEC-034	365	Days																																																				
0115-MEC-540	0115-05LAA10AA401	SAFETY VALVE DEAERATOR	0115-MEC-045	365	Days																																																				
0115-MEC-634	0115-05WS01PU001	AIR COMPRESSOR	0115-MEC-062	365	Days																																																				
0115-MEC-645	0115-05LBQ20AA401	Process Steam Header safety valve	0115-MEC-045	365	Days																																																				
0115-MEC-646	0115-05LBQ20AA402	Extraction Steam safety valve	0115-MEC-045	365	Days																																																				
0115-MEC-548	0115-05SGD10AA010	DELUGE VALVE AUX#1 DELUGE VALVE AT AUX.TRANSFORMER AREA	0115-MEC-030	730	Days																																															2026				
0115-MEC-549	0115-05SGD11AA010	DELUGE VALVE AUX#2 DELUGE VALVE AT AUX.TRANSFORMER AREA	0115-MEC-030	730	Days																																															2026				
0115-MEC-550	0115-05SGD12AA010	DELUGE VALVE AUX#3 DELUGE VALVE AT AUX.TRANSFORMER AREA	0115-MEC-030	730	Days																																															2026				
0115-MEC-551	0115-05SGD13AA010	DELUGE VALVE AUX#4 DELUGE VALVE AT AUX.TRANSFORMER AREA	0115-MEC-030	730	Days																																															2026				
0115-MEC-552	0115-05SGD14AA010	DELUGE VALVE AUX#5 DELUGE VALVE AT AUX.TRANSFORMER AREA	0115-MEC-030	730	Days																																															2026				
0115-MEC-553	0115-05SGD15AA010	DELUGE VALVE AUX#6 DELUGE VALVE AT AUX.TRANSFORMER AREA	0115-MEC-030	730	Days																																															2026				
0115-MEC-554	0115-05SGD23AA011	DELUGE VALVE GT#1 DELUGE VALVE AT GSUT AREA	0115-MEC-030	730	Days																																															2026				
0115-MEC-555	0115-05SGD24AA011	DELUGE VALVE GT#2 DELUGE VALVE AT GSUT AREA	0115-MEC-030	730	Days																																															2026				
0115-MEC-556	0115-05SGD22AA011	DELUGE VALVE ST DELUGE VALVE AT GSUT AREA	0115-MEC-030	730	Days																																															2026				
0115-MEC-557	0115-05SGD20AA011	DELUGE VALVE UAT#1 DELUGE VALVE AT GSUT AREA	0115-MEC-030	730	Days																																															2026				
0115-MEC-558	0115-05SGD21AA011	DELUGE VALVE UAT#2 DELUGE VALVE AT GSUT AREA	0115-MEC-030	730	Days																																															2026				
0115-MEC-280	0115-51HAH10AC001	HRSG51	0115-MEC-042	1095	Days						2025	2025	2025																																												
0115-MEC-439	0115-52HAH10AC001	HRSG 52	0115-MEC-042	1095	Days																							2025	2025	2025																											
0115-MEC-125	0115-05BRV10AG001	EMERGENCY DIESEL GENERATOR	0115-MEC-058	500	Hours Run																																																				
0115-MEC-542	0115-05SGU12AP001	Engine Drive Fire Pump	0115-MEC-032	500	Hours Run																																																				
0115-MEC-115	0115-05SCA10AN001	AIR COMPRESSOR 1	0115-MEC-035	2000	Hours Run																																																				
0115-MEC-116	0115-05SCA20AN001	AIR COMPRESSOR 2	0115-MEC-035	2000	Hours Run																																																				
0115-MEC-117	0115-05SCA10AN001	AIR COMPRESSOR 1	0115-MEC-036	4000	Hours Run														2026																																						
0115-MEC-118	0115-05SCA20AN001	AIR COMPRESSOR 2	0115-MEC-036	4000	Hours Run														2026																																						
0115-MEC-119	0115-05SCA10AN001	AIR COMPRESSOR 1	0115-MEC-037	8000	Hours Run																																																				
0115-MEC-120	0115-05SCA20AN001	AIR COMPRESSOR 2	0115-MEC-037	8000	Hours Run																																																				
0115-MEC-001	0115-51MBA10AG001	GAS TURBINE GT#51	0115-MEC-005	10000	Hours Run																																																				
0115-MEC-015	0115-51MBL10AT010	PRE-FILTER AIR INTAKE GT#51	0115-MEC-050	10000	Hours Run						2025	2025	2025																																												
0115-MEC-017	0115-51MBL10AT012	FITER VENTILATION FAN INLET GT#51	0115-MEC-052	10000	Hours Run						2025	2025	2025																																												
0115-MEC-028	0115-52MBA10AG001	GAS TURBINE GT#52	0115-MEC-005	10000	Hours Run																																																				
0115-MEC-042	0115-52MBL10AT010	PRE-FILTER AIR INTAKE GT#52	0115-MEC-050	10000	Hours Run																							2025	2025	2025																											
0115-MEC-044	0115-52MBL10AT012	FITER VENTILATION FAN INLET GT#52	0115-MEC-052	10000	Hours Run																							2025	2025	2025																											
0115-MEC-121	0115-05SCA10AN001	AIR COMPRESSOR 1	0115-MEC-038	10000	Hours Run														2027																																						
0115-MEC-122	0115-05SCA20AN001	AIR COMPRESSOR 2	0115-MEC-038	10000	Hours Run														2027																																						
0115-MEC-002	0115-51MBA10AG001	GAS TURBINE GT#51	0115-MEC-046	20000	Hours Run																																																	2026			
0115-MEC-016	0115-51MBL10AT015	FINAL FINAL AIR INTAKE GT#51	0115-MEC-051	20000	Hours Run						2025	2025	2025																																												
0115-MEC-029	0115-52MBA10AG001	GAS TURBINE GT#52	0115-MEC-046	20000	Hours Run														2027																																						
0115-MEC-043	0115-52MBL10AT015	FINAL FINAL AIR INTAKE GT#52	0115-MEC-051	20000	Hours Run																							2025	2025	2025																											
0115-MEC-003	0115-51MBA10AG001	GAS TURBINE GT#51	0115-MEC-047	30000	Hours Run																																				2028	2028															
0115-MEC-018	0115-51MBA10AG001	GAS TURBINE GT#51	0115-MEC-044	30000	Hours Run						2025	2025	2025																												2028	2028															
0115-MEC-020	0115-51MBP40AT001	Fuel Gas Heater Scrubber GT#51	0115-MEC-054	30000	Hours Run						2025	2025	2025																																												
0115-MEC-024	0115-51MBP02AT001	GAS SKID FILTER A GT#51	0115-MEC-054	30000	Hours Run						2025	2025	2025																																												
0115-MEC-025	0115-51MBP03AT001	GAS SKID FILTER BGT#51	0115-MEC-054	30000	Hours Run						2025	2025	2025																																												
0115-MEC-030	0115-52MBA10AG001	GAS TURBINE GT#52	0115-MEC-047	30000	Hours Run																																																	2028	2028		
0115-MEC-045	0115-52MBA10AG001	GAS TURBINE GT#52	0115-MEC-044	30000	Hours Run																							2025	2025	2025																								2028	2028		
0115-MEC-047	0115-52MBP40AT001	Fuel Gas Heater Scrubber GT#52	0115-MEC-054	30000	Hours Run																							2025	2025	2025																											
0115-MEC-051	0115-52MBP02AT001	Fuel Gas Filter GT#52	0115-MEC-054	30000	Hours Run																							2025	2025	2025																											
0115-MEC-052	0115-52MBP03AT001	Fuel Gas Filter GT#52	0115-MEC-054	30000	Hours Run																							2025	2025	2025																											
0115-MEC-055	0115-50MMA10AG001	STEAM TURBINE	0115-MEC-006	30000	Hours Run																																																	2028	2028		
0115-MEC-004	0115-51MBA10AG001	GAS TURBINE GT#51	0115-MEC-048	60000	Hours Run						2025	2025	2025																																												
0115-MEC-031	0115-52MBA10AG001	GAS TURBINE GT#52	0115-MEC-048	60000	Hours Run																							2025	2025	2025																											
0115-MEC-056	0115-50MMA10AG001	STEAM TURBINE	0115-MEC-049	60000	Hours Run																																																				
0115-MEC-126	0115-05BRV10AG001	EMERGENCY DIESEL GENERATOR	0115-MEC-057	30	Days																																																				
0115-MEC-656	0115-05SGU12AP001	MOTOR DRIVE FIRE PUMP.	0115-MEC-031	90	Days																																																				
0115-MEC-547	0115-05SGU12AP001	MOTOR DRIVE FIRE PUMP.	0115-MEC-059	30	Days																																																				
0115-MEC-648	0115-05MBP10	Fuel gas pipeline	0115-MEC-063	730	Days													2024																																						
0115-MEC-649	0115-05GBA10BA001	RAW WATER STORAGE TANK	0115-MEC-064	180	Days																																																				
0115-MEC-650	0115-05GBL10BB001	SERVICE WATER TANK	0115-MEC-064	180	Days																																																				
0115-MEC-651	0115-05GCL10BB001	MAKEUP WATER TANK (DEMINE)	0115-MEC-064	180	Days																																																				
0115-MEC-652	0115-05GBL20BB001	CT MAKE-UP WATER TANK	0115-MEC-064	180	Days																																																				
0115-MEC-653	0115-05SCF10BB001	SERVICE AIR RECEIVER TANK	0115-MEC-065	180	Days																																																				
0115-MEC-654	0115-05SCE10BB001	INTRUMENT AIR RECEIVER TANK	0115-MEC-065	180	Days																																																				
0115-MEC-655	0115-05SCF20BB001	SERVICE AIR RECEIVER TANK (WTP.)	0115-MEC-065	180	Days																																																				
0115-MEC-657	0115-50PBN40BB001	SCALE INHIBITOR TANK CT.DOSING	0115-MEC-067	180	Days																																																				
0115-MEC-658	0115-50PBN30BB001	CORROSION INHIBITOR TANK CT.DOSING	0115-MEC-067	180	Days																																																				
0115-MEC-659	0115-50PBN10BB001	98% H2SO4 TANK CT.DOSING	0115-MEC-067	180	Days																																																				
0115-MEC-660	0115-50PBN20BB001	NAOCL TANK CT.DOSING	0115-MEC-067	180	Days																																																				
0115-MEC-661	0115-05GBN10BB001	PAC TANK WTP.	0115-MEC-067	180	Days																																																				
0115-MEC-662	0115-05GBN20BB001	NaOCL TANK WTP.	0115-MEC-067	180	Days																																																				
0115-MEC-663	0115-05GBN30BB001	NaOH TANK WTP.	0115-MEC-067	180	Days																																																				
0115-MEC-664	0115-05GBE10BB001	MF EM/CIP TANK WTP.	0115-MEC-067	180	Days																																																				
0115-MEC-665	0115-05GBN40BB001	POLYMER MIXING TANK WTP.	0115-MEC-067	180	Days																																																				
0115-MEC-666	0115-05GCA40BB001	RO WATER TANK WTP.	0115-MEC-067	180	Days																																																				
0115-MEC-667	0115-05GCN10BB001	BISULITE TANK WTP.	0115-MEC-067	180	Days																																																				
0115-MEC-668	0115-05GCN30BB001	ANTI-SCALE TANK WTP.	0115-MEC-067	180	Days																																																				
0115-MEC-669	0115-05GCP10BB001	RO/CEDI CIP TANK WTP.	0115-MEC-067	180	Days																																																				
0115-MEC-670	0115-05GCN40BB001	BIOCIDE TANK WTP.	0115-MEC-067	180	Days																																																				
0115-MEC-671	0115-05GCN50BB001	H2SO4 TANK WTP.	0115-MEC-067	180	Days																																																				
0115-MEC-672	0115-05QCA20BB001	AMMONIA TANK HRSG CHEMICAL DOSING	0115-MEC-067	180	Days																																																				
0115-MEC-673	0115-05QCA30BB001	O2 SCAVENGER TANK HRSG CHEMICAL DOSING	0115-MEC-067	180	Days																																																				
0115-MEC-674	0115-05QCA10BB001	PHOSPHATE SOLUTION TANK HRSG CHEMICAL DOSING	0115-MEC-067	180	Days																																																				
0115-MEC-675	0115-05PAB21AA002	MCWP1 DISCH ISOL VALVE	0115-MEC-066	365	Days																																																				
0115-MEC-676	0115-05PAB22AA002	MCWP2 DISCH ISOL VALVE	0115-MEC-066	365	Days																																																				
0115-MEC-677	0115-05PAB30AA001	MCW COND INLET ISOL VALVE	0115-MEC-066	365	Days																																																				
0115-MEC-678	0115-05PAB50AA001	MCW COND OUTLET ISOL VALVE	0115-MEC-066	365	Days																																																				
0115-MEC-679	0115-05PAB61AA001	MCW CT1 INLET ISOL VALVE	0115-MEC-066	365	Days																																																				
0115-MEC-680	0115-05PAB62AA001	MCW CT2 INLET ISOL VALVE	0115-MEC-066	365	Days																																																				
0115-MEC-681	0115-05PAB62AA002	MCW CT INLET BAYPASS ISOL VALVE	0115-MEC-066	365	Days																																																				
0115-MEC-682	0115-05PAB11AA001	MCWP1 SUCT ISOL VALVE	0115-MEC-066	365	Days																																																				
0115-MEC-683	0115-05PAB12AA001	MCWP2 SUCT ISOL VALVE	0115-MEC-066	365	Days																																																				
0115-MEC-684	0115-05CON002	VIBRATION ANALYZER TOOL. : EMERSON CSI 2140	0115-MEC-068	365	Days																																																				
0115-MEC-685	0115-05CON003	LASER SHAFT ALIGNMENT TOOL	0115-MEC-068	365	Days																																																				
0115-MEC-686	0115-50MMA10AG001	STEAM TURBINE	0115-MEC-069	60000	Hours Run						2025	2025	2025																																												
		RS2																																																							
0114-MEC-063	0114-10SGU11AP001	Diesel Engine Drive Fire Pump	0114-MEC-032	30	Day																																																				
0114-MEC-066	0114-10SGU11AA010	DIESEL FIRE PUMP SUCTION VALVE	0114-MEC-029	180	Day																																																				
0114-MEC-067	0114-10SGV10AA010	GATE VALVE SUPPLY FIRE RING MAIN	0114-MEC-029	180	Day																																																				
0114-MEC-068	0114-10SGV10AA011	GATE VALVE SUPPLY DELUGE VALVE	0114-MEC-029	180	Day																																																				
0114-MEC-069	0114-10SGD10AA010	DULUGE VALVE#1 FOR ABPR4 TRANSFORMER	0114-MEC-030	730	Day																									Y2025																											
0114-MEC-070	0114-10SGD10AA011	DULUGE VALVE#2 FOR ABPR5 TRANSFORMER	0114-MEC-030	730	Day																									Y2025																											
0114-MEC-071	0114-10SGV10AA012	FIRE HOSE CABINET#1 FOR ABPR4	0114-MEC-031	365	Day																																																				
0114-MEC-072	0114-10SGV10AA013	FIRE HOSE CABINET#1 FOR ABPR5	0114-MEC-031	365	Day																																																				
0114-MEC-065	0114-10SGU11AP001	Diesel Engine Drive Fire Pump	0114-MEC-034	500	Hours																																																				
0114-MEC-073	0114-10SGU10AE001	OVERHEAD CRANE	0114-MEC-027	180	Day																																																				

ภาคผนวก ข.47

ข้อมูลจำนวนลูกจ้างท้องถิ่น

บริษัท อมตะ บี.กริม เพาเวอร์ (ระยอง) 5 จำกัด

รายชื่อพนักงานในท้องถิ่น

(ณ เดือน มกราคม - มิถุนายน 2568)

ลำดับ	รหัส		ชื่อ	นามสกุล	ที่อยู่อาศัย
1	P00378	นาย	วีรยุทธ	เกิดสุข	หมู่บ้านศักดิ์สายธาร สมาร์ท 195/53 หมู่ 5 ต.มาบข่า อ.พัฒนานิคม จ. ระยอง 21180
2	P00526	นาย	กำธร	รุ่งจำรัส	42 หมู่ 5 ต.แม่น้ำคู้ อ.ปลวกแดง จ.ระยอง 21140 / ตรงข้ามวัดสิทธิสามัคคี แม่น้ำคู้
3	P00662	นาย	อุดมศักดิ์	กันทะชุมภู	99/21 หมู่บ้าน ปาลิดากรีนวิลล์ ต.ทับมา อ.เมือง จ.ระยอง 21000
4	P00689	นาย	ชาญณรงค์	นุ่มนวล	123/59 ม.6 ต.มาบยางพร อ.ปลวกแดง จ.ระยอง / หมู่บ้านปานรดา สะพานสี่
5	P00692	นาย	ประเทือง	ภูสีไม้	หมู่บ้านนริญญา ซอย 6 ตำบล นิคมพัฒนา อำเภอนิคมพัฒนา ระยอง 21180
6	P00721	นาย	สิทธิกรณ์	เขยกลาง	หมู่บ้าน เดอะวิลเลจ ซอย 9 นิคมพัฒนา มะขามคู่ ระยอง 21180
7	P00942	นาย	วิชชากร	เอี่ยมโอษฐ์	หมู่บ้านหงส์สราญธานี อำเภอเมืองระยอง ระยอง 21150
8	P02514	นาย	ธันยกฤษณ์	ชีเปรม	6/219 ม. 6 ต.บ้านฉาง อ.บ้านฉาง จ.ระยอง 21130
9	P00881	นาย	ชัยชนะ	ยอดนิล	195/81 หมู่ที่ 3 ต.บ้านฉาง อ.บ้านฉาง จ.ระยอง

พนักงาน บริษัท อมตะ บี.กริม เพาเวอร์ (ระยอง) 5 จำกัด	ทั้งหมด	38	ท่าน
พนักงานในท้องถิ่นของ บริษัท อมตะ บี.กริม เพาเวอร์ (ระยอง) 5 จำกัด	ทั้งหมด	9	ท่าน
พนักงานในท้องถิ่นของ บริษัท อมตะ บี.กริม เพาเวอร์ (ระยอง) 5 จำกัด	**คิดเป็น**	**31.58 %**	

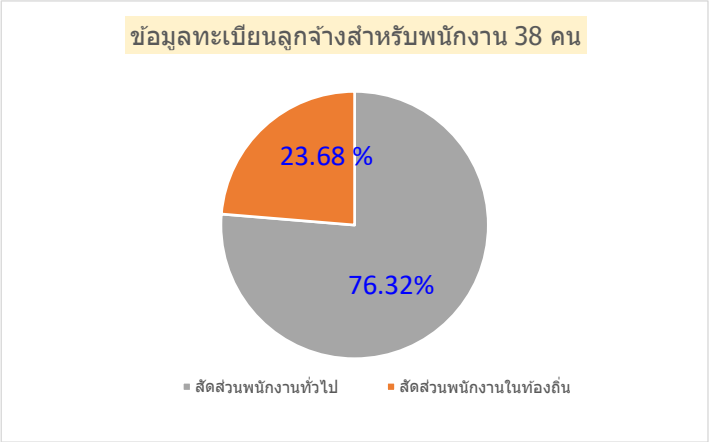

พนักงานทั้งหมด	38	คน
สัดส่วนพนักงานทั่วไป	76.32	%
สัดส่วนพนักงานในท้องถิ่น	23.68	%

ภาคผนวก ข.48

แผนมวลชนสัมพันธ์ ประจำปีพ.ศ. 2568

ABPR SE AND COMPANY ACTIVITY 2025

Plan | Standby

ลำดับ	โครงการ/กิจกรรม	พื้นที่ / ชุมชน / หมู่บ้าน / กลุ่มเป้าหมาย	ตอบรับกิจกรรม B.Grimm	เดือน											
				ม.ค.	ก.พ.	มี.ค.	เม.ย.	พ.ค.	มิ.ย.	ก.ค.	ส.ค.	ก.ย.	ต.ค.	พ.ย.	ธ.ค.
กิจกรรมชุมชนสัมพันธ์ภายนอก (External PR)															
1	**กิจกรรมสนับสนุนชุมชน** (Donation)														
1.1	**สนับสนุนชุมชนสัมพันธ์ หมวดหมู่ ชีวิตความเป็นอยู่**														
	กิจกรรมส่งเสริมอาชีพ ผลิตภัณฑ์ ชุมชน วิสาหกิจชุมชน / กลุ่มอาชีพ / กลุ่มแม่บ้าน	1. อบต. มาบยางพร 2. อบต. พนานิคม 3. อบต. เขาไม้แก้ว	ชีวิตความเป็นอยู่												
	กิจกรรมพัฒนา อำนวยความสะดวกด้านสุขภาพ อนามัย การใช้ชีวิต														
	กิจกรรมพัฒนาปรับปรุงพื้นที่สาธารณประโยชน์ / ชุมชน														
	กิจกรรมสนับสนุนน้ำดื่ม / ถุงยังชีพ เพื่อดำรงชีวิต														
	กิจกรรมอื่นๆ														
1.2	**สนับสนุนชุมชนสัมพันธ์ หมวดหมู่ การศึกษา**														
	กิจกรรมมอบทุนการศึกษา/ของขวัญ วันเด็กแห่งชาติ	1. อบต. มาบยางพร 2. อบต. พนานิคม 3. อบต. เขาไม้แก้ว	การศึกษา												
	กิจกรรมมอบทุนการศึกษาให้กับโรงเรียนในพื้นที่														
	กิจกรรมสนับสนุนด้านวิทยาศาสตร์														
	กิจกรรมสนับสนุนอุปกรณ์การเรียน / เครื่องแบบ														
	กิจกรรมอื่นๆ														
1.3	**สนับสนุนชุมชนสัมพันธ์ หมวดหมู่ วัฒนธรรม**														
	กิจกรรมสนับสนุนในช่วงเทศกาลสงกรานต์	1. อบต. มาบยางพร 2. อบต. พนานิคม 3. อบต. เขาไม้แก้ว	วัฒนธรรม												
	กิจกรรมประเพณีท้องถิ่น / พื้นบ้าน ของชุมชนในพื้นที่														
	กิจกรรมเทศกาลลอยกระทง														
	กิจกรรมวันสำคัญทางสถาบันพระมหากษัตริย์														
	กิจกรรมอื่นๆ														
1.4	**สนับสนุนชุมชนสัมพันธ์ หมวดหมู่ ศาสนา**														
	กิจกรรมวันเข้าพรรษา / ออกพรรษา / วันสำคัญทางศาสนาพุทธ	1. อบต. มาบยางพร 2. อบต. พนานิคม 3. อบต. เขาไม้แก้ว	ศาสนา												
	กิจกรรมทำบุญกฐิน ผ้าป่า														
	กิจกรรมทำนุบำรุงศาสนสถาน														
	กิจกรรมอื่นๆ														
1.5	**สนับสนุนชุมชนสัมพันธ์ หมวดหมู่ สิ่งแวดล้อม**														
	กิจกรรมปลูกป่า	1. อบต. มาบยางพร 2. อบต. พนานิคม 3. อบต. เขาไม้แก้ว 4. การนิคมอุตสาหกรรมอมตะ ซิตี้ ระยอง	สิ่งแวดล้อม												
	กิจกรรมหรือโครงการที่สนับสนุนส่งเสริมสิ่งแวดล้อม														
	กิจกรรมอื่นๆ														
1.6	**สนับสนุนชุมชนสัมพันธ์ หมวดหมู่ กีฬา**														
	กิจกรรมการแข่งขันกีฬาเยาวชน / อบต. /เทศบาล / ชุมชน	1. อบต. มาบยางพร 2. อบต. พนานิคม 3. อบต. เขาไม้แก้ว	กีฬา												
	กิจกรรมการแข่งขันกอล์ฟการกุศล														
	สนับสนุนน้ำดื่มในงานกิจกรรมกีฬาต่างๆ														
	กิจกรรมอื่นๆ														
1.7	**สนับสนุนชุมชนสัมพันธ์ หมวดหมู่ ชุมชนสัมพันธ์**														
	กิจกรรมเพื่อการสานสัมพันธ์ สร้างความสัมพันธ์ที่ดีระหว่างชุมชนกับโรงไฟฟ้า เช่น การเลี้ยงรับรอง มอบของขวัญ	1. อบต. มาบยางพร 2. อบต. พนานิคม 3. อบต. เขาไม้แก้ว	ชุมชนสัมพันธ์												
	สนับสนุนน้ำดื่มในกิจกรรมชุมชน เช่นการประชุมผู้ใหญ่บ้าน การประชุมชุมชน เป็นต้น														
	กิจกรรมอื่นๆ ตามวาระ เช่น งานวันเกิด งานศพ งานเกษียณ งานอำลาตำแหน่ง งานต้อนรับตำแหน่ง เป็นต้น														
1.8	**สนับสนุนชุมชนสัมพันธ์ หมวดหมู่ อื่นๆ**														
	การสนับสนุนที่ไม่เกี่ยวข้องกับหมวดหมู่ชุมชนสัมพันธ์ หรือชุมชน	พื้นที่ชุมชนรอบโรงไฟฟ้า และพื้นที่อื่นๆ	อื่นๆ												

ABPR SE AND COMPANY ACTIVITY 2025

Plan | Standby

ลำดับ	โครงการ/กิจกรรม	พื้นที่ / ชุมชน / หมู่บ้าน / กลุ่มเป้าหมาย	ตอบรับกิจกรรม B.Grimm	เดือน											
				ม.ค.	ก.พ.	มี.ค.	เม.ย.	พ.ค.	มิ.ย.	ก.ค.	ส.ค.	ก.ย.	ต.ค.	พ.ย.	ธ.ค.
2	การประชุมคณะกรรมการร่วมประสานงานเพื่อการพัฒนาชุมชนและสิ่งแวดล้อม														
	การประชุมคณะกรรมการร่วมประสานงานเพื่อการพัฒนาชุมชนและสิ่งแวดล้อม ครั้งที่ 1														
	นำส่งรายงานการประชุม (ครั้งที่ 1)	คณะกรรมการร่วมประสานงานเพื่อการพัฒนาชุมชนและสิ่งแวดล้อม	สิ่งแวดล้อม												
	นำส่งหนังสือเชิญประชุม พร้อมแนบวาระการประชุม (ครั้งที่ 1)														
	การประชุมคณะกรรมการร่วมประสานงานเพื่อการพัฒนาชุมชนและสิ่งแวดล้อม ครั้งที่ 2														
	นำส่งรายงานการประชุม (ครั้งที่ 2)														
	นำส่งหนังสือเชิญประชุม พร้อมแนบวาระการประชุม (ครั้งที่ 2)														
	กิจกรรมศึกษาดูงานและสานสัมพันธ์คณะกรรมการตรวจสอบผลกระทบทางสิ่งแวดล้อม														
3	การให้ความรู้ และประชาสัมพันธ์														
	กิจกรรม B.Grimm Open House Open Heart : เชิญหน่วยงานราชการ โรงเรียน และผู้สนใจในพื้นที่เข้าเยี่ยมชมโรงไฟฟ้า พร้อมให้ความรู้ด้านโรงไฟฟ้า	ผู้นำชุมชน โรงเรียนมัธยม อบต. หน่วยงานราชการ / บริษัทข้างเคียง	ชุมชน และความเป็นอยู่ การศึกษา												
	1) จัดเตรียมข้อมูล และสื่อประชาสัมพันธ์ให้ความรู้ด้านโรงไฟฟ้า														
	2) เตรียม Presenter สำหรับต้อนรับ														
	3) จัดเตรียมรายชื่อกลุ่มเป้าหมาย เพื่อเข้าเยี่ยมชมโรงไฟฟ้า														
	4) กำหนดวันเข้าเยี่ยมชมโรงไฟฟ้า														
	5) ออกจดหมายเชิญหน่วยงานราชการ โรงเรียน และผู้สนใจเข้าเยี่ยมชมโรงไฟฟ้า														
	6) เยี่ยมชมโรงไฟฟ้าตามกำหนดการ														
	กิจกรรม PR สื่อประชาสัมพันธ์ : ทำสื่อประชาสัมพันธ์ลง Facebook Fanpage														
	1) ข้อมูลโรงไฟฟ้า	ชุมชนและบุคคลทั่วไป	ชุมชนสัมพันธ์												
	2) ข้อมูลชุมชน หรือข้อมูลทั่วไป														
4	กิจกรรมชุมชนสัมพันธ์														
4.1	กิจกรรม Community Support (Thai Life) : เข้าร่วมกิจกรรม และเยี่ยมชมกลุ่มวิสาหกิจชุมชน ชุมชนเกษตรพอเพียง การดำเนินงานของอบต. เพื่อสร้างความสัมพันธ์ที่ดี และนำข้อมูลที่ได้มาต่อยอดโครงการเพื่อชุมชน	1. อบต. มาบยางพร 2. อบต. พนานิคม 3. อบต. เขาไม้แก้ว	ชุมชน และความเป็นอยู่												
4.2	กิจกรรม Community Support (Sport & Helath) : เข้าร่วมกิจกรรมกีฬา และเยี่ยมชมสถานพยาบาลในชุมชน เพื่อสร้างความสัมพันธ์ที่ดี และนำข้อมูลที่ได้มาพัฒนาโครงการเพื่อชุมชนต่อไป	1. อบต. มาบยางพร 2. อบต. พนานิคม 3. อบต. เขาไม้แก้ว	กีฬาและสุขภาพ												
4.3	กิจกรรม B.Grimm Energy and Environment Awareness : ปรับรูปแบบกิจกรรม Worshop เน้นเรื่องพลังงาน และสิ่งแวดล้อมในโรงไฟฟ้า โดยทำกิจกรรมร่วมกับคณะทำงานพลังงานของโรงไฟฟ้าฯ รวมไปถึงการนำทัศนศึกษา เพื่อขยายผลสร้างความเข้าใจในเรื่องของพลังงาน	กลุ่มโรงไฟฟ้า อมตะ บี.กริม เพาเวอร์ (ระยอง)	การศึกษา												
4.4	กิจกรรม B.Grimm Community Exchange Kwonledge : ส่งเสริมและผลักดันให้กลุ่มวิสาหกิจในพื้นที่ ได้เผยแพร่ความรู้ความสามารถ และถ่ายทอดประสบการณ์ให้กับชุมชนอื่นๆ เพื่อให้เกิดการพัฒนาอย่างยั่งยืน	1. อบต. มาบยางพร 2. อบต. พนานิคม 3. อบต. เขาไม้แก้ว	ชุมชน และความเป็นอยู่												
5	กิจกรรมชุมชนสัมพันธ์ ICROM														
5.1	กิจกรรม B.Grimm School Camp : Environment		การศึกษา												
	1.จัดทำ Proposal คิดกิจกรรมร่วมกัน เน้นด้านสิ่งแวดล้อม														
	2.นำเสนอกิจกรรมให้แก่โรงเรียน จำนวน 1 โรงเรียน														
	3.จัดเตรียมแคมป์/ ดำเนินเรื่องการทำเบิกจ่าย/ ทำสื่อประชาสัมพันธ์รับสมัครจิตอาสา และจัดทำ Link ลงทะเบียนกิจกรรม														
	4.ดำเนินการจัดกิจกรรม														
	5.เสนอแบบประเมิน และสรุปผล														

ABPR SE AND COMPANY ACTIVITY 2025

Plan | Standby

ลำดับ	โครงการ/กิจกรรม	พื้นที่ / ชุมชน / หมู่บ้าน / กลุ่มเป้าหมาย	ตอบรับกิจกรรม B.Grimm	เดือน											
				ม.ค.	ก.พ.	มี.ค.	เม.ย.	พ.ค.	มิ.ย.	ก.ค.	ส.ค.	ก.ย.	ต.ค.	พ.ย.	ธ.ค.
5.2	กิจกรรม B.Grimm Care and Share : กิจกรรมแจกถุงผ้าเพื่อสุขภาพและกระเป๋ายาและเวชภัณฑ์ให้กับ รพสต.ในพื้นที่														
	1. ประสานงานกับทางผู้เกี่ยวข้อง เรื่องการขอสนับสนุนกระเป๋าผ้าใส่ยา		ชุมชน และความเป็นอยู่												
	2. ลงพื้นที่ชุมชน นัดพูดคุยรายละเอียดกับทางชุมชนเรื่อง กระเป๋าผ้าใส่ยาสำหรับผู้ป่วยเบาหวาน จำนวน 600 ใบ														
	3. รับจดหมายสนับสนุนจากทางโรงพยาบาลส่งเสริมสุขภาพตำบลในพื้นที่														
	4. สอบถามรายละเอียด ราคา และประเมินงบประมาณเบื้องต้น														
	5. ออกแบบกระเป๋าผ้า														
	6. ดำเนินการเรื่องเอกสารขอสนับสนุน / Memo														
	7.ดำเนินการส่งแบบกระเป๋าผ้า และเอกสารพิจารณา														
	8. ส่งแบบให้ทางโรงพยาบาลส่งเสริมสุขภาพตำบล เพื่อพิจารณา														
	9. ดำเนินการขออนุมัติเบิกเงินเพื่อดำเนินการ														
	10. ส่งแบบกระเป๋าเพื่อดำเนินการผลิต														
	11. ดำเนินการส่งมอบกระเป๋า														
5.3	บ้านนักวิทยาศาสตร์น้อย		การศึกษา												
	1. ติดตามการส่งผลงาน 20 กิจกรรม และ 1 โครงงาน														
	2. พิธีรับตราพระราชทานของโรงเรียนในเครือข่ายที่ผ่านการประเมินรับตรา พระราชทาน ผลจากการเข้าร่วมอบรม และผลการประเมินทุกๆ ปี														
	3. จัดอบรมเชิงปฏิบัติการสำหรับครูอนุบาลตามวัตถุประสงค์ของโครงการ ภายในเดือนกันยายน - ตุลาคมของทุกๆ ปี ทั้งระดับปฐมวัย และประถมศึกษา														
	Internal PR														
1	กิจกรรม Employee Relation														
	ICROM Mindful Compassion Project	พนักงานทุกคน	สื่อประชาสัมพันธ์ / ADMIN PLATFORM / Facebook												
	กิจกรรม Internal Activity	พนักงานทุกคน	สื่อประชาสัมพันธ์ / ADMIN PLATFORM / Facebook												
	กิจกรรม สงกรานต์ ประจำปี สืบสานประเพณี วัฒนธรรมไทย เปิดโอกาสให้พนักงานได้ร่วมอนุรักษ์ประเพณี วัฒนธรรมไทย และสร้างความสัมพันธ์อันดีระหว่างพี่น้องพนักงาน	พนักงานทุกคน	กิจกรรม / ADMIN PLATFORM / Facebook / รางวัล												
2	กิจกรรม ประชาสัมพันธ์														
	การบริหารจัดการระบบ														
	กิจกรรม ประชาสัมพันธ์ ประกาศนโยบาย คณะทำงาน ระบบการจัดการต่างๆ ของบริษัทฯ (ระบบ ISO 14001:2015 (การบริการจัดการด้านสิ่งแวดล้อม) / ISO 45001:2018 (ระบบการจัดการด้านอาชีวอนามัย และความปลอดภัย) / ISO 22301:2019 (การบริหารจัดการความต่อเนื่อง) โดยออกแบบเครื่องมือในการประชาสัมพันธ์ให้มีความเข้าใจง่าย สื่อสารให้พนักงานทุกคนมีความเข้าใจที่ตรงกัน และสามารถปฏิบัติได้อย่างถูกต้อง	พนักงานทุกคน	สื่อประชาสัมพันธ์ / ADMIN PLATFORM / Email												

Prepared By	Approved By	Approved By	Approved By
(...Premkamon Krangsala...)	(.....Bongkoch Sariman.....)	(.....Aekapong Thanomrit.....)	(.....Saroche Arunpairojkul.....)
Supervisor,Social Enterprise	Head of Social Enterprise	Power Plant Manager	Executive Vice President, Head of Industrial Customer Relations and Operation Management
Date ::.....20/05/2025.....	Date ::.....20/05/2025.....	Date ::....20/05/2025.....	Date ::....20/05/2025.....

ภาคผนวก ข.49-1

สื่อประชาสัมพันธ์ออนไลน์ (Facebook) ของโครงการ

โรงไฟฟ้าอมตะ บี.กริม เพาเวอร์ ระยอง : Amata B.Grimm Power Rayong

5.3 พัน การกดถูกใจ • ผู้ติดตาม 5.5 พัน คน

ส่งข้อความ

ถูกใจ

ค้นหา

ภาคผนวก ข.49-2

กิจกรรมมวลชนสัมพันธ์

ABPR5

SOCIAL ENTERPRISE TEAM

AMATA B.GRIMM POWER (RAYONG)

กลุ่มโรงไฟฟ้าอมตะ บี.กริม เพาเวอร์ (ระยอง)

LOCATION

บริษัท อมตะ บี.กริม เพาเวอร์ (ระยอง) 5 จำกัด

พื้นที่ตั้ง นิคมอุตสาหกรรมอมตะซิตี้

ที่อยู่ 7/507 ม.6 ตำบลมาบยางพร

อำเภอปลวกแดง จังหวัดระยอง 21140

โรงไฟฟ้าพลังงานร้อนร่วม
(Combine Cycle Co-generation)

ใช้ก๊าซธรรมชาติ
เป็นเชื้อเพลิง

บริษัท อมตะ บี.กริม เพาเวอร์ (ระยอง) 5 จำกัด โรงไฟฟ้าพลังความร้อนร่วม (Combine Cycle Co-generation) ใช้ “ก๊าซธรรมชาติ” เป็นเชื้อเพลิง มีกำลัง การผลิตไฟฟ้า 131 เมกะวัตต์

ผลิตไอน้ำได้ 30 ตัน / ชั่วโมง แรงดันไฟฟ้า 115 กิโลโวลต์ (kv)

บริษัทฯเริ่มต้นซื้อขายไฟฟ้าตั้งแต่วันที่ 1 ตุลาคม 2018

โดยมีปริมาณการจ่ายไฟฟ้าให้กับการไฟฟ้าฝ่ายผลิตแห่งประเทศไทย จำนวน 90 เมกะวัตต์ ภายใต้สัญญาผู้ผลิตไฟฟ้ารายเล็ก 25 ปี

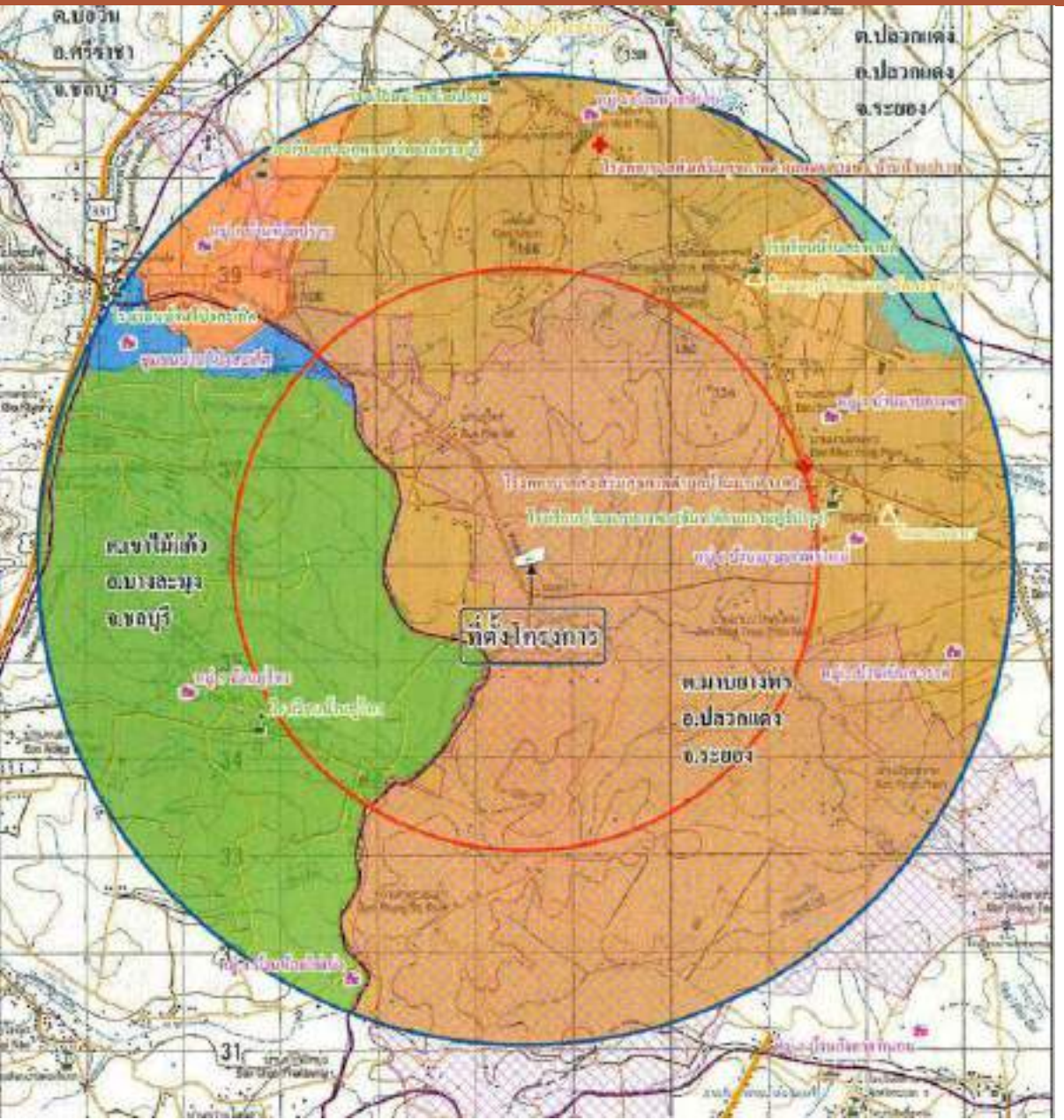

พื้นที่ 5 กม.ใกล้เคียงกลุ่มโรงไฟฟ้า

ตำบลมาบยางพร
จ.ระยอง

เทศบาลตำบลตะเคียนเตี้ย
จ.ระยอง

ตำบลเขาไม้แก้ว
จ.ชลบุรี

ตำบลบ่อวิน
จ.ชลบุรี

สนับสนุนกิจกรรมชุมชน

ชีวิตความเป็นอยู่

การศึกษา

วัฒนธรรม

ศาสนา

สิ่งแวดล้อม

กีฬา

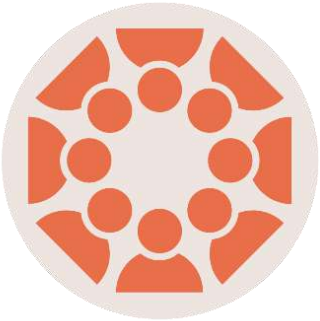

ชุมชนสัมพันธ์

ชุมชนสัมพันธ์

มอบกระเช้าอวยพรปีใหม่ ผู้บริหารท้องถิ่น ผู้นำชุมชนรอบโรงไฟฟ้า และหน่วยงานราชการ เดือนมกราคม ปี 2568

การศึกษา

มกราคม 2568

กิจกรรมวันเด็กประจำปี

- นิคมอุตสาหกรรมอมตะ ซิตี้ ระยอง
- โรงเรียนบ้านมาบยางพร ต.มาบยางพร
- โรงเรียนบ้านห้วยปราบ ต.มาบยางพร
- องค์การบริหารส่วนตำบลพนานิคม
- โรงเรียนนิคมสร้างตนเอง จ.ระยอง 9 ต.พนานิคม
- โรงเรียนบ้านห้วยไข่เน่า ต.เขาไม้แก้ว
- องค์การบริหารส่วนตำบลปลวกแดง

การศึกษา

วันที่ 21 มกราคม 2568

มอบเครื่องมือวิทยาศาสตร์สำหรับใช้ในงานวิเคราะห์คุณภาพตัวอย่างแก่มหาวิทยาลัยบูรพา

จำนวน 4 รายการ ดังนี้

1.เครื่องทำสุญญากาศโดยใช้แรงดันน้ำ (Aspirator)

2.เครื่องวัดปริมาณน้ำและไขมันในน้ำ (Oil Content Analyzer)

3.เครื่องกวนสารให้ความร้อนแบบอนาล็อก (Analog heating plate)

4.อ่างควบคุมอุณหภูมิ (Water bath)

การศึกษา

วันที่ 3 กุมภาพันธ์ 2568

เปิดบ้านวิชาการ (OPEN HOUSE)

อนุบาลตันตรารักษ์ ประจำปี 2568

เป็นกิจกรรมที่สามารถนำไปประยุกษ์ใช้ใน

“ โครงการบ้านวิทยาศาสตร์น้อย ประเทศไทย ”

ซึ่งครูของโรงเรียนเป็นวิทยากรเครือข่ายท้องถิ่น (Local Trainer)

ชีวิตความเป็นอยู่

วันที่ 13 กุมภาพันธ์ 2568

กิจกรรมบริจาคโลหิต “100 ล้านซีซี โลหิตชาวอมตะเพื่อสภากาชาดไทย” ครั้งที่ 41

เป็นโอกาสอันดีที่ผู้ประกอบการโรงงาน ได้ทำกิจกรรมเพื่อเป็นสาธารณะประโยชน์ร่วมกัน โดยในครั้งนี้ทางพนักงานของกลุ่มโรงไฟฟ้าอมตะ บี.กริม เพาเวอร์ (ระยอง) ได้ร่วม **บริจาคโลหิตไปกว่า 3,850 ซีซี**

การศึกษา

วันที่ 18 – 21 มีนาคม 2568

โครงการบ้านนักวิทยาศาสตร์น้อย ประเทศไทย 2568

กลุ่มโรงไฟฟ้า อมตะ บี.กริม เพาเวอร์ และ บี.กริม บีไอพี เพาเวอร์ เข้าร่วมโครงการบ้านนักวิทยาศาสตร์น้อย ประเทศไทย ปีงบประมาณ 2568 เพื่อเตรียมพร้อมการจัดการแผนการสอน แก่คุณครูระดับปฐมวัย และประถมศึกษา โครงการบ้านนักวิทยาศาสตร์น้อย บี.กริม ทั้ง 3 เครือข่าย ได้แก่

- เครือข่าย บี.กริม ชลบุรี
- เครือข่าย บี.กริม ระยอง
- เครือข่าย บี.กริม บีไอพี

วัฒนธรรม

เมษายน 2568

กิจกรรม “วันสงกรานต์ ประจำปี 2568”

กลุ่มโรงไฟฟ้าอมตะ บี.กริม เพาเวอร์ (ระยอง) เข้าร่วมสนับสนุนกิจกรรม “วันสงกรานต์ ประจำปี 2568”กับชุมชนในพื้นที่ใกล้เคียงโดยรอบโรงไฟฟ้าในช่วงเดือนเมษายน โดยมีการสรงน้ำพระ รดน้ำดำหัวผู้สูงอายุ เพื่อสานสัมพันธ์อันดีกับชุมชนและสืบสานวัฒนธรรมประเพณีไทย

ชีวิตความเป็นอยู่

วันที่ 25 เมษายน 2568

กิจกรรมบริจาคโลหิต “100 ล้านซีซี โลหิตชาวอมตะเพื่อสภากาชาดไทย” ครั้งที่ 42

เป็นโอกาสอันดีที่ผู้ประกอบการโรงงาน ได้ทำกิจกรรมเพื่อเป็นสาธารณะประโยชน์ร่วมกัน โดยในครั้งนี้ทางพนักงานของกลุ่มโรงไฟฟ้าอมตะ บี.กริม เพาเวอร์ (ระยอง) ได้ร่วม **บริจาคโลหิตไปกว่า 5,950 ซีซี**

ณ โรงไฟฟ้าอมตะ บี.กริม เพาเวอร์ (ระยอง) 1,2

ชีวิตความเป็นอยู่

วันที่ 16 พฤษภาคม 2568

โครงการ "รณรงค์การสวมหมวกนิรภัย สร้างวินัยจราจร"

สนับสนุนหมวกกันน็อคในโครงการ "รณรงค์การสวมหมวกนิรภัย สร้างวินัยจราจร" ณ ศูนย์พัฒนาเด็กเล็ก ตำบลเขาไม้แก้ว อำเภอบางละมุง จังหวัดชลบุรี โดยมีวัตถุประสงค์เพื่อจัดการจุดเสี่ยงโดยการมีส่วนร่วมกับชุมชน และจัดการพฤติกรรมเสี่ยงการไม่สวมหมวกนิรภัยของผู้ปกครอง เด็ก และครู รวมถึงปลูกฝังจิตสำนึกให้แก่เด็ก ผู้ปกครอง และครู

สิ่งแวดล้อม

วันที่ 29 พฤษภาคม 2568

โครงการ “ขยะแลกยิ้ม”

เข้าร่วมบริจาคขวดน้ำพลาสติก (PET) ผ่านโครงการ “ขยะแลกยิ้ม” เพื่อส่งต่อให้กับนิคมอุตสาหกรรมอมตะซิตี้ ระยอง นำไปรีไซเคิลเป็นกระเป๋านักเรียนมอบให้น้อง ณ โรงเรียนบ้านภูไทร ต.เขาไม้แก้ว อ.บางละมุง จ.ระยอง โดยกลุ่มโรงไฟฟ้า ABPR ได้ร่วมบริจาคขวดน้ำกว่า 90 กิโลกรัม ซึ่งโครงการนี้สอดคล้องกับ SDG 12: การบริโภคและการผลิตที่ยั่งยืน (Responsible Consumption and Production) ส่งเสริมการใช้ทรัพยากรอย่างมีประสิทธิภาพ

ชีวิตความเป็นอยู่

วันที่ 5 มิถุนายน 2568

การบริจาคคอมพิวเตอร์โน๊ตบุ้คให้สภ.ปลวกแดง

บริจาคเครื่องคอมพิวเตอร์โน๊ตบุ้คจำนวน 5 เครื่องให้แก่สถานีตำรวจภูธรปลวกแดง จังหวัดระยอง โดยมีวัตถุประสงค์เพื่อสนับสนุนการดำเนินงานของหน่วยงานภายนอก และเพื่อเป็นการส่งเสริมการทำงานร่วมกันในด้านการพัฒนาเทคโนโลยีสารสนเทศให้มีประสิทธิภาพในการทำงานมากยิ่งขึ้น

ชีวิตความเป็นอยู่

วันที่ 5 มิถุนายน 2568

กิจกรรมบริจาคโลหิต “100 ล้านซีซี โลหิตชาวอมตะเพื่อสภากาชาดไทย” ครั้งที่ 43

เป็นโอกาสอันดีที่ผู้ประกอบการโรงงาน ได้ทำกิจกรรมเพื่อเป็นสาธารณะประโยชน์ร่วมกัน โดยในครั้งนี้ทางพนักงานของกลุ่มโรงไฟฟ้าอมตะ บี.กริม เพาเวอร์ (ระยอง) ได้ร่วม **บริจาคโลหิตไปกว่า 2,800 ซีซี**

ชุมชนสัมพันธ์

วันที่ 10 มิถุนายน 2568

ลงพื้นที่พบผู้นำชุมชนรอบโรงไฟฟ้า

ลงพื้นที่พบผู้นำชุมชนรอบโรงไฟฟ้า โดยพบ คุณไพศาล อู่เจริญ นายกองค์การบริหารส่วนตำบลพนานิคมและคุณไชยา เงินท้วม อดีตผู้ใหญ่บ้าน หมู่ที่ 6 ตำบลมาบยางพร จังหวัดระยอง เพื่อร่วมปรึกษาหารือแลกเปลี่ยนความคิดเห็น สร้างความสัมพันธ์ที่ดี ความไว้วางใจในฐานะเพื่อนบ้านที่ดีรวมถึงสร้างความเข้าใจและความเชื่อมั่นเพื่อร่วมเป็นส่วนหนึ่งในการพัฒนาความยั่งยืนในพื้นที่ร่วมกัน

สิ่งแวดล้อม

วันที่ 12 มิถุนายน 2568

โครงการ “ปลูกป่าเฉลิมพระเกียรติ สมเด็จพระนางเจ้าสุทิดา พัชรสุธาพิมลลักษณ พระบรมราชินี”

ร่วมโครงการ “ปลูกป่าเฉลิมพระเกียรติ สมเด็จพระนางเจ้าสุทิดา พัชรสุธาพิมลลักษณ พระบรมราชินี” เนื่องในวโรกาสวันเฉลิมพระชนมพรรษา วันที่ 3 มิถุนายน ณ ด้านข้างอ่างเก็บน้ำ 4 (ด้านหลังบริษัท ยูเอซีเจ (ประเทศไทย) จำกัด) โดยมีเป้าหมายปลูกต้นอินทนิล มะขาม พิกุล หว้า และกระทิง รวมจำนวน 1,000 ต้น ทั้งนี้ เพื่อเพิ่มพื้นที่สีเขียว สร้างความสมบูรณ์สู่ธรรมชาติและอนุรักษ์สิ่งแวดล้อมให้อุดมสมบูรณ์ยิ่งขึ้นไป

ICROM

SOCIAL ENTERPRISE TEAM

ภาคผนวก ข.50

เอกสารการแต่งตั้งคณะทำงานมวลชนสัมพันธ์

Amata B Grimm Power (Rayong) 1 Limited
Amata B Grimm Power (Rayong) 2 Limited
Amata B Grimm Power (Rayong) 3 Limited
Amata B Grimm Power (Rayong) 4 Limited
Amata B Grimm Power (Rayong) 5 Limited

F = Full Organization
E = Existing Organization

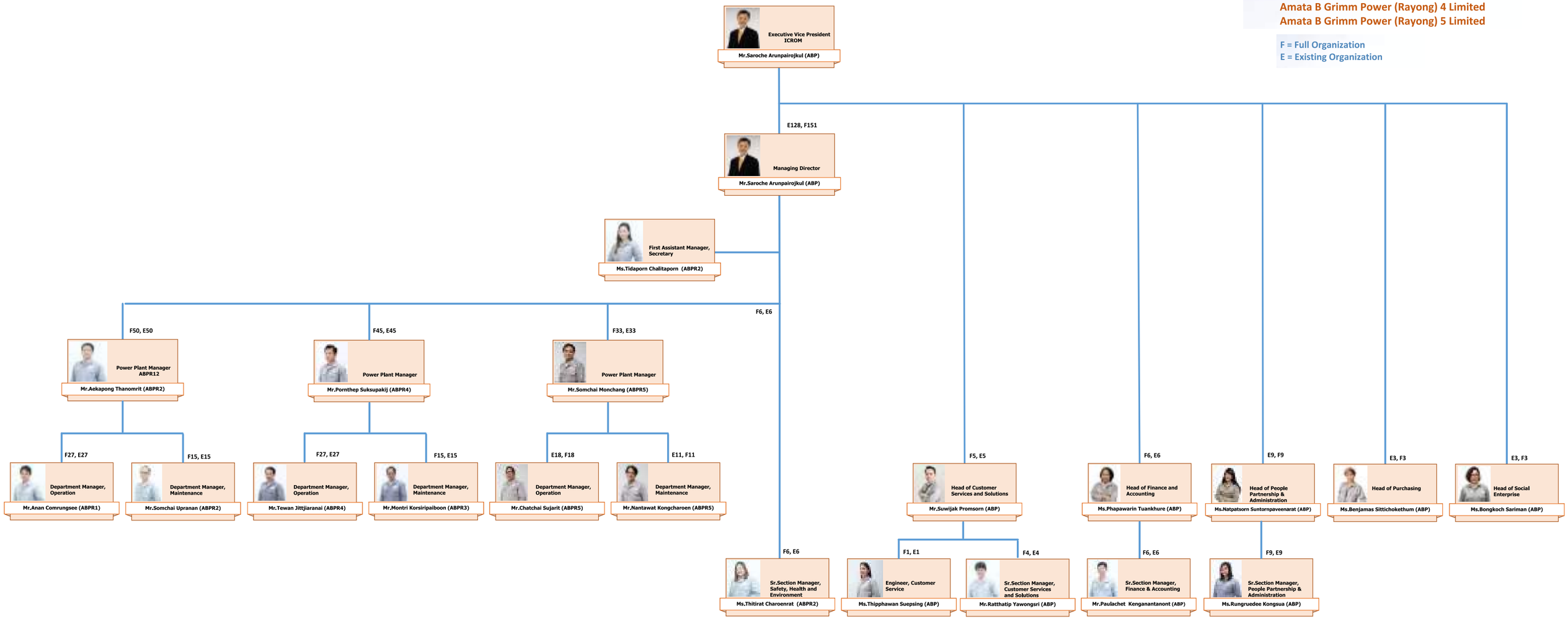

Update as of 19/05/2025

Amata B Grimm Power (Rayong) 5 Limited

F = Full Organization
E = Existing Organization

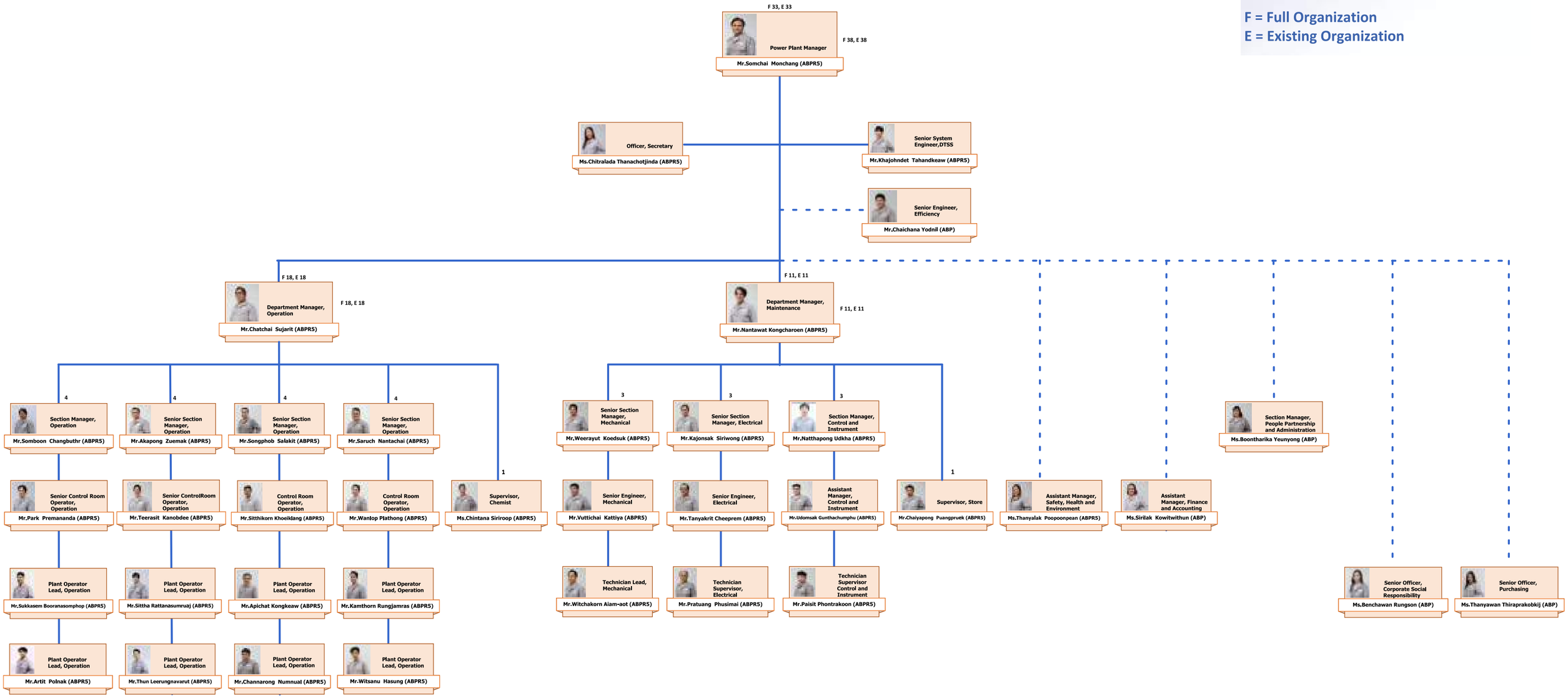

Update as of 19/05/2025

ภาคผนวก ข.51-1

หนังสือแต่งตั้งคณะกรรมการร่วมประสานงานเพื่อพัฒนาชุมชนและสิ่งแวดล้อม

ที่ อก 5105.4.2/0160

สำนักงานนิคมอุตสาหกรรมอมตะซิตี้ ระยอง
7 หมู่ 3 ตำบลบ่อวิน อำเภอศรีราชา
จังหวัดชลบุรี 20230

5 สิงหาคม 2567

เรื่อง การแต่งตั้งคณะกรรมการมวลชนสัมพันธ์และสิ่งแวดล้อมโครงการโรงไฟฟ้าก๊าซธรรมชาติ
ของกลุ่มบริษัท อมตะ บี.กริม เพาเวอร์ (ระยอง) จำกัด

เรียน กรรมการผู้จัดการบริษัท อมตะ บี.กริม เพาเวอร์ (ระยอง) 1 จำกัด

อ้างถึง หนังสือบริษัท อมตะ บี.กริม เพาเวอร์ (ระยอง) 1 จำกัด ที่ อบพร1.007/2567 ลงวันที่ 23 พฤษภาคม 2567

สิ่งที่ส่งมาด้วย คำสั่งการนิคมอุตสาหกรรมแห่งประเทศไทย ที่ 365/2567 เรื่อง แต่งตั้งคณะกรรมการมวลชนสัมพันธ์และสิ่งแวดล้อมโครงการโรงไฟฟ้าก๊าซธรรมชาติของกลุ่ม บริษัท อมตะ บี.กริม เพาเวอร์ (ระยอง) จำกัด

ตามที่อ้างถึง กลุ่มโรงไฟฟ้าบริษัท บี.กริม เพาเวอร์ (ระยอง) ได้รับอนุญาตให้ประกอบกิจการผลิตและจำหน่ายกระแสไฟฟ้าและไอน้ำเพื่อการอุตสาหกรรม ซึ่งตั้งอยู่ในนิคมอุตสาหกรรมอมตะซิตี้ ระยอง โดยได้รับเห็นชอบจากสำนักงานนโยบายและแผนทรัพยากรธรรมชาติและสิ่งแวดล้อม จำนวน 5 โครงการ ได้ขอความอนุเคราะห์มายังสำนักงานนิคมอุตสาหกรรมอมตะซิตี้ ระยอง (สน.อต.(รย.)) ในการจัดตั้งคณะกรรมการมวลชนสัมพันธ์และสิ่งแวดล้อมของกลุ่ม โรงไฟฟ้าอมตะ บี.กริม เพาเวอร์ (ระยอง) ร่วมกับการนิคมอุตสาหกรรมแห่งประเทศไทย โดยควบรวมคณะกรรมการฯ ของ 5 โครงการเป็นชุดเดียวกัน ความละเอียดแจ้งแล้วนั้น

สน.อต.(รย.) ดำเนินการเสนอร่างคำสั่งคณะกรรมการมวลชนสัมพันธ์และสิ่งแวดล้อมโครงการโรงไฟฟ้าก๊าซธรรมชาติของกลุ่มบริษัท อมตะ บี.กริม เพาเวอร์ (ระยอง) จำกัด ดังกล่าวต่อผู้ว่าการการนิคมอุตสาหกรรมแห่งประเทศไทยพิจารณาและลงนามเรียบร้อยแล้ว รายละเอียดตามสิ่งที่ส่งมาด้วย ทั้งนี้ ขอให้บริษัทฯ ปฏิบัติตามมาตรการที่ระบุไว้ในรายงานประเมินผลกระทบสิ่งแวดล้อม ที่ได้รับเห็นชอบอย่างเคร่งครัดต่อไป

จึงเรียนมาเพื่อทราบ

ขอแสดงความนับถือ

(นายเสริมพงศ์ สุขโข)
ผู้อำนวยการสำนักงานนิคมอุตสาหกรรมอมตะซิตี้ ระยอง

โทรศัพท์ 0 3834 6442-3
โทรสาร 0 3834 5700
ไปรษณีย์อิเล็กทรอนิกส์ leatamatacity.rayong@gmail.com

คำสั่งการนิคมอุตสาหกรรมแห่งประเทศไทย
ที่ ๑๒๕ /๒๕๖๗

เรื่อง แต่งตั้งคณะกรรมการเฝ้าระวังผลกระทบสิ่งแวดล้อมโครงการโรงไฟฟ้าก๊าซธรรมชาติ
ของกลุ่มบริษัท อมตะ บี.กริม เพาเวอร์ (ระยอง) จำกัด

เพื่อให้การติดตามและตรวจสอบผลกระทบสิ่งแวดล้อมโครงการโรงไฟฟ้าก๊าซธรรมชาติของกลุ่มบริษัท อมตะ บี.กริม เพาเวอร์ (ระยอง) จำกัด เป็นไปอย่างมีประสิทธิภาพและสอดคล้องกับมาตรการป้องกันและแก้ไขผลกระทบสิ่งแวดล้อม และมาตรการติดตามตรวจสอบผลกระทบสิ่งแวดล้อมของโครงการฯ

อาศัยอำนาจตามความในมาตรา ๒๘ แห่งพระราชบัญญัติการนิคมอุตสาหกรรมแห่งประเทศไทย พ.ศ. ๒๕๒๒ จึงแต่งตั้งคณะกรรมการเฝ้าระวังผลกระทบสิ่งแวดล้อมโครงการโรงไฟฟ้าก๊าซธรรมชาติของกลุ่มบริษัท อมตะ บี.กริม เพาเวอร์ (ระยอง) จำกัด ขึ้น โดยมีองค์ประกอบ หน้าที่และอำนาจ ดังต่อไปนี้

๑. องค์ประกอบ

๑.๑ ภาคราชการ

(๑) ผู้อำนวยการสำนักงานนิคมอุตสาหกรรมอมตะซิตี้ ระยอง	ประธานกรรมการ
(๒) ผู้แทนสำนักงานกำกับกิจการพลังงานเขต ๘	กรรมการ
(๓) นายกองค์การบริหารส่วนตำบลมาบยางพร	กรรมการ
(๔) นายกองค์การบริหารส่วนตำบลพนานิคม	กรรมการ
(๕) นายกองค์การบริหารส่วนตำบลเขาไม้แก้ว	กรรมการ
(๖) กำนันตำบลมาบยางพร	กรรมการ
(๗) กำนันตำบลพนานิคม	กรรมการ
(๘) กำนันตำบลเขาไม้แก้ว	กรรมการ

๑.๒ ภาคประชาชน

(๑) ผู้แทนหมู่ ๑ ตำบลมาบยางพร	กรรมการ
(๒) ผู้แทนหมู่ ๒ ตำบลมาบยางพร จำนวน ๒ คน	กรรมการ
(๓) ผู้แทนหมู่ ๓ ตำบลมาบยางพร	กรรมการ
(๔) ผู้แทนหมู่ ๔ ตำบลมาบยางพร จำนวน ๒ คน	กรรมการ
(๕) ผู้แทนหมู่ ๕ ตำบลมาบยางพร	กรรมการ
(๖) ผู้แทนหมู่ ๖ ตำบลมาบยางพร จำนวน ๒ คน	กรรมการ
(๗) ผู้แทนหมู่ ๗ ตำบลมาบยางพร	กรรมการ
(๘) ผู้แทนหมู่ ๑ ตำบลพนานิคม	กรรมการ
(๙) ผู้แทนหมู่ ๔ ตำบลพนานิคม จำนวน ๒ คน	กรรมการ
(๑๐) ผู้แทนหมู่ ๕ ตำบลพนานิคม จำนวน ๒ คน	กรรมการ

/(๑๑) ผู้แทน...

(๑๑) ผู้แทนหมู่ ๗ ตำบลพนานิคม จำนวน ๒ คน	กรรมการ
(๑๒) ผู้แทนหมู่ ๘ ตำบลพนานิคม	กรรมการ
(๑๓) ผู้แทนหมู่ ๑ ตำบลเขาไม้แก้ว จำนวน ๒ คน	กรรมการ
(๑๔) ผู้แทนหมู่ ๔ ตำบลเขาไม้แก้ว จำนวน ๒ คน	กรรมการ
(๑๕) ผู้แทนหมู่ ๕ ตำบลเขาไม้แก้ว จำนวน ๒ คน	กรรมการ
(๑๖) ผู้แทนหมู่ ๒ ตำบลมะขามคู่	กรรมการ
(๑๗) ผู้แทนหมู่ ๕ ตำบลตะเคียนเตี้ย จำนวน ๒ คน	กรรมการ
(๑๘) ผู้แทนหมู่ ๓ ตำบลปอวิน	กรรมการ

๓.๓ ผู้แทนโครงการ

(๑) ผู้แทนบริษัท อมตะ บี.กริม เพาเวอร์ (ระยอง) ๑ จำกัด	กรรมการและเลขานุการ
(๒) ผู้แทนบริษัท อมตะ บี.กริม เพาเวอร์ (ระยอง) ๒ จำกัด	กรรมการและเลขานุการ
(๓) ผู้แทนบริษัท อมตะ บี.กริม เพาเวอร์ (ระยอง) ๓ จำกัด	กรรมการและเลขานุการ
(๔) ผู้แทนบริษัท อมตะ บี.กริม เพาเวอร์ (ระยอง) ๔ จำกัด	กรรมการและเลขานุการ
(๕) ผู้แทนบริษัท อมตะ บี.กริม เพาเวอร์ (ระยอง) ๕ จำกัด	กรรมการและเลขานุการ

ให้คณะกรรมการฯ มีวาระการดำรงตำแหน่งคราวละ ๔ ปี และดำรงตำแหน่งติดต่อกันไม่เกิน ๒ วาระ กรณีการพ้นจากตำแหน่งของกรรมการให้เป็นไปตามมาตรการฯ ที่กำหนด

๒. หน้าที่และอำนาจ

๒.๑ ประสานงานและกำกับดูแลให้โครงการฯ ดำเนินการโดยไม่ส่งผลกระทบต่อสิ่งแวดล้อม

๒.๒ ให้คำปรึกษา เสนอแนะแนวทาง และประสานงานแก้ไขปัญหาสิ่งแวดล้อมและข้อร้องเรียนของชุมชนอันเนื่องมาจากการดำเนินงานของโครงการโรงไฟฟ้าจักรธรรมชาติของกลุ่มบริษัท อมตะ บี.กริม เพาเวอร์ (ระยอง) จำกัด

๒.๓ พิจารณาและให้ข้อคิดเห็นต่อขั้นตอนและวิธีการดำเนินงานที่อาจก่อให้เกิดผลกระทบสิ่งแวดล้อม ตลอดจนประสานงานกับหน่วยงานอื่นๆ ที่เกี่ยวข้อง

๒.๔ รับทราบแผนการดำเนินงานของโครงการและให้ข้อเสนอแนะเกี่ยวกับแนวทางการดำเนินงานหรือมาตรการที่ควรเพิ่มเติม ในกรณีพิเศษเพื่อป้องกันหรือลดผลกระทบต่อสิ่งแวดล้อมและชุมชน

๒.๕ ติดตามตรวจสอบการปฏิบัติตามมาตรการป้องกันและแก้ไขผลกระทบสิ่งแวดล้อมของโครงการ ผลการติดตามตรวจสอบคุณภาพสิ่งแวดล้อมของโครงการ

๒.๖ ติดตามตรวจสอบคุณภาพสิ่งแวดล้อมในปัจจัยที่เป็นข้อวิตกกังวลหรือความสนใจของชุมชน

/๒.๗ ในกรณี...

๒.๗ ในกรณีที่มีการก่อสร้างและทดลองเดินเครื่อง ให้โครงการโรงไฟฟ้าก๊าซธรรมชาติของกลุ่มบริษัท อมตะ บี.กริม เพาเวอร์ (ระยอง) จำกัด นำเสนอความก้าวหน้าโครงการฯ ต่อคณะกรรมการฯ ตามความเหมาะสม

๒.๘ จัดให้มีการส่งเสริมความรู้ หรือเสริมสร้างความเข้าใจเกี่ยวกับการจัดการสิ่งแวดล้อมให้แก่ประชาชนและชุมชนอย่างต่อเนื่อง

๒.๙ พิจารณาจัดทำแผนงานประชาสัมพันธ์และความรับผิดชอบต่อสังคมของโครงการฯ ทั้งระยะสั้น ระยะยาว และแบบชั่วคราว ให้เหมาะสมกับชุมชน

๒.๑๐ พิจารณาการชดเชยและเยียวยา หากเป็นปัญหาที่พิสูจน์แล้วว่าเกิดจากการดำเนินงานของโครงการฯ

๒.๑๑ จัดให้มีการอบรม ให้ความรู้ และการศึกษาดูงานภายใน ๖ เดือน นับแต่วันที่คำสั่งนี้มีผลใช้บังคับ และในทุก ๒ ปี เพื่อเพิ่มเติมความรู้ใหม่ หรือความเหมาะสม

๒.๑๒ เชิญบุคคลหรือเจ้าหน้าที่ที่เกี่ยวข้อง เพื่อให้ข้อมูล คำปรึกษา หรือข้อเสนอแนะได้ตามความจำเป็น

๒.๑๓ กำหนดให้มีวาระการประชุมอย่างน้อยปีละ ๒ ครั้ง หรือมากกว่าหากมีเหตุจำเป็นเร่งด่วน เพื่อติดตามผลการปฏิบัติตามมาตรการป้องกันและแก้ไขผลกระทบสิ่งแวดล้อม และมาตรการติดตามตรวจสอบผลกระทบสิ่งแวดล้อม และแผนมวลชนสัมพันธ์ของโครงการฯ

๒.๑๔ ให้มีการประชุมวาระพิเศษทุกครั้งที่มีการร้องเรียนถึงความเสียหายอันเกิดกับบุคคล นิติบุคคล องค์กร ตลอดจนทรัพย์สินของผู้อื่นและส่วนรวมด้วย อันเนื่องมาจากการก่อสร้างและการดำเนินการผลิตของโครงการ

๒.๑๕ การพิจารณาดำเนินการใดๆ ให้คณะกรรมการฯ ปฏิบัติตามมาตรการป้องกันและแก้ไขผลกระทบสิ่งแวดล้อม และมาตรการติดตามตรวจสอบผลกระทบสิ่งแวดล้อม ที่ได้รับความเห็นชอบของแต่ละโครงการ

ทั้งนี้ ตั้งแต่บัดนี้เป็นต้นไป

สั่ง ณ วันที่ ๒๕ กรกฎาคม พ.ศ. ๒๕๖๗

(นายวิริศ อัมระปาล)
ผู้ว่าการการนิคมอุตสาหกรรมแห่งประเทศไทย

ภาคผนวก ข.51-2

รายงานสรุปการประชุมคณะกรรมการร่วมประสานงานเพื่อการพัฒนาชุมชนและสิ่งแวดล้อม
ครั้งที่ 1/2568

กลุ่มโรงไฟฟ้า อมตะ บี.กริม เพาเวอร์ (ระยอง)

AMATA B.GRIMM POWER (RAYONG) LIMITED

รายงานการประชุมคณะกรรมการร่วมประสานงานเพื่อการพัฒนาชุมชนและสิ่งแวดล้อม
โครงการโรงไฟฟ้าของกลุ่มโรงไฟฟ้า อมตะ บี.กริม เพาเวอร์ (ระยอง)
ครั้งที่ 1/2568
วันศุกร์ที่ 27 มิถุนายน 2568 เวลา 10.00 น.
ณ ห้องประชุม ชั้น 2 อาคารสำนักงานโครงการ บริษัท อมตะ บี.กริม เพาเวอร์ (ระยอง) 4 จำกัด

<u>กรรมการผู้เข้าร่วมประชุม</u>

หน่วยงานภาครัฐ และหน่วยงานท้องถิ่น

1.	นางสาวกิ่งเพชร	ชัยเสริม	(แทน)ผู้อำนวยการสำนักงานนิคมอุตสาหกรรมอมตะซิตี้ ระยอง (ประธาน)
2.	นายพร้อมพงษ์	วงศ์มณีนิล	ผู้อำนวยการสำนักงานกำกับกิจกรรมพลังงานเขต 8
3.	นายสมพร	ภูมิสะอาด	(แทน)นายกองค์การบริหารส่วนตำบลมาบยางพร
4.	นายไพศาล	อู่เจริญ	นายกองค์การบริหารส่วนตำบลพนานิคม
5.	นางสุภาวดี	จันทรา	(แทน)นายกองค์การบริหารส่วนตำบลเขาไม้แก้ว
6.	นางศราวุธ	เพชรรัตร	(แทน)กำนันตำบลมาบยางพร
7.	นายณัฐพล	พวงอ่อน	(แทน)กำนันตำบลเขาไม้แก้ว

ตัวแทนภาคประชาชน

8.	นายประสงค์	ทรัพย์สมบูรณ์	ผู้แทนหมู่ 1 ตำบลมาบยางพร
9.	นายนพพร	สุวดิษฐ์	ผู้แทนหมู่ 2 ตำบลมาบยางพร
10.	นายชาตรี	สุวรรณฉวี	ผู้แทนหมู่ 2 ตำบลมาบยางพร
11.	นายสังวาล	บุดดาวงษ์	ผู้แทนหมู่ 4 ตำบลมาบยางพร
12.	นายบุญช่วย	แฟงเมือง	ผู้แทนหมู่ 4 ตำบลมาบยางพร
13.	นายสมคิด	เจียมตน	ผู้แทนหมู่ 5 ตำบลมาบยางพร
14.	นายไชยา	เงินทัวม	ผู้แทนหมู่ 6 ตำบลมาบยางพร
15.	นายเทอดศักดิ์	บุญประสา	ผู้แทนหมู่ 7 ตำบลมาบยางพร
16.	นายศุภชัย	เล็ดลอด	ผู้แทนหมู่ 1 ตำบลพนานิคม
17.	นายบุญเรือง	จอกแก้ว	ผู้แทนหมู่ 4 ตำบลพนานิคม
18.	นายชิงชัย	ใหม่เมธี	ผู้แทนหมู่ 4 ตำบลพนานิคม
19.	นายนพดล	วรรณเจริญ	ผู้แทนหมู่ 5 ตำบลพนานิคม
20.	นางกรรณิกา	อาจหาญ	ผู้แทนหมู่ 5 ตำบลพนานิคม
21.	นายมาดาม	วรรณเจริญ	ผู้แทนหมู่ 7 ตำบลพนานิคม

/..22.นาย

22. นายอำนวย ศิริจันทร์ ผู้แทนหมู่ 7 ตำบลพนานิคม
23. นายสุนันท์ จันทร์โชติ ผู้แทนหมู่ 8 ตำบลพนานิคม
24. นางวิลาวรรณ แก้วรุ่ง ผู้แทนหมู่ 1 ตำบลเขาไม้แก้ว
25. นายจักรกฤช สายสมร ผู้แทนหมู่ 1 ตำบลเขาไม้แก้ว
26. นายบรรพต กองแก้ว ผู้แทนหมู่ 4 ตำบลเขาไม้แก้ว
27. นางฐิตินันท์ ประกอบธรรม ผู้แทนหมู่ 4 ตำบลเขาไม้แก้ว
28. นางยุพิน อันขวัญเมือง ผู้แทนหมู่ 5 ตำบลเขาไม้แก้ว
29. นายไสว บุญอินทร์ ผู้แทนหมู่ 5 ตำบลเขาไม้แก้ว
30. นางกิ่งกาญจน์ ไพโรจน์ ผู้แทนหมู่ 2 ตำบลมะขามคู่
31. นางสาวนภาวรรณ คำแจ่ม ผู้แทนหมู่ 5 ตำบลตะเคียนเตี้ย
32. นางสมร สุขเจริญ ผู้แทนหมู่ 5 ตำบลตะเคียนเตี้ย
33. เบญจมาภรณ์ คำมณีจันทร์ ผู้แทนหมู่ 3 ตำบลบ่อวิน

ตัวแทนโครงการโรงไฟฟ้าอมตะ บี.กริม เพาเวอร์ (ระยอง)

1. นายเอกพงศ์ ถนอมฤทธิ์ ผู้จัดการโรงไฟฟ้า บจ. อมตะ บี.กริม เพาเวอร์ (ระยอง) 1
2. นายพรเทพ สุขสุภกิจ ผู้จัดการโรงไฟฟ้า บจ. อมตะ บี.กริม เพาเวอร์ (ระยอง) 3
3. นางสาวเปรมกมล กร่างสละ ผู้แทนโรงไฟฟ้า บจ. อมตะ บี.กริม เพาเวอร์ (ระยอง) 2
4. นางสาวเบญจวรรณ รังสน ผู้แทนโรงไฟฟ้า บจ. อมตะ บี.กริม เพาเวอร์ (ระยอง) 4
5. นางสาวธัญญลักษณ์ ภู่พูลเพียน ผู้แทนโรงไฟฟ้า บจ. อมตะ บี.กริม เพาเวอร์ (ระยอง) 5
6. นางสาวบงกช สาริมาน ผู้จัดการฝ่ายธุรกิจเพื่อสังคม สายงานลูกค้าอุตสาหกรรมสัมพันธ์ และ ปฏิบัติการโรงไฟฟ้า บริษัท บี.กริม เพาเวอร์ จำกัด (มหาชน)

ผู้แทน บริษัทที่ปรึกษา (บริษัท อีสเทิร์น ไทย คอนซัลติ้ง 1992 จำกัด**)**

1. คุณวรรณเพ็ญ เหลาจินดาวัฒน์
2. คุณศลิษา สุขเทพ
3. คุณณัฐชยา บรรพบุตร

/..คณะกรรมการ

คณะกรรมการที่ไม่ได้เข้าร่วมประชุม

1.	นายเสริมพงศ์	สุขโข	ผู้อำนวยการสำนักงานนิคมอุตสาหกรรมอมตะซิตี้ ระยอง (ประธาน)
2.	นายอภิชาติ	เงินท้วม	นายกองค์การบริหารส่วนตำบลมาบยางพร
3.	นายจำเนียร	กีทีปกูล	นายกองค์การบริหารส่วนตำบลเขาไม้แก้ว
4.	นายถิรเดช	สุขใจ	กำนันตำบลมาบยางพร
5.	นางพจนีย์	พันธ์เจริญ	กำนันตำบลพนานิคม
6.	นายชาตรี	สุวรรณฉวี	ผู้แทนหมู่ 2 ตำบลมาบยางพร
7.	นายพรรษวัฏ	ชื่นศิริ	ผู้แทนหมู่ 3 ตำบลมาบยางพร
8.	นายจิระวัฒน์	ชูโชติ	ผู้แทนหมุ่ 6 ตำบลมาบยางพร

เปิดประชุมเวลา 10.00 น.

ผู้แทนโรงไฟฟ้าฯ นายพรเทพ สุขสุภกิจ ผู้จัดการโรงไฟฟ้า บริษัท อมตะ บีกริม เพาเวอร์ (ระยอง) 3,4 จำกัด กล่าวต้อนรับคณะกรรมการ และแนะนำ คุณบงกช สาริมาน ผู้จัดการฝ่ายธุรกิจเพื่อสังคม สายงานลูกค้าอุตสาหกรรมสัมพันธ์ และปฏิบัติการโรงไฟฟ้า บริษัท บี.กริม เพาเวอร์ จำกัด (มหาชน) ให้ทุกท่านได้ทราบ

ระเบียบวาระที่ 1 เรื่อง แจ้งให้ที่ประชุมทราบ

ผู้แทนโรงไฟฟ้าฯ คุณบงกช สาริมาน แจ้งให้ที่ประชุมทราบในส่วนของคุณกิ่งเพชร ชัยเสริม นักบริหารงานนิคมอุตสาหกรรม 8 สำนักงานนิคมอุตสาหกรรมอมตะซิตี้ ระยอง เข้าร่วมการประชุมแทนคุณเสริมพงศ์ สุขโข ผู้อำนวยการสำนักงานนิคมอุตสาหกรรมอมตะซิตี้ ระยอง (ประธาน) และขอมอบหมาย คุณไชยา เงินท้วม ผู้แทนหมู่ 6 ตำบลมาบยางพร (อดีตประธานคณะกรรมการ) ทำหน้าที่แทนประธาน

ประธาน (แทน) นายไชยา เงินท้วม ผู้แทนหมู่ 6 ตำบลมาบยางพร รับมอบหมายทำหน้าที่ประธานกรรมการ กล่าวต้อนรับคณะกรรมการ

มติที่ประชุม คณะกรรมการรับทราบ

/..ระเบียบ

ระเบียบวาระที่ 2 **เรื่องรับรองรายงานการประชุมครั้งที่ 2/2567**

ประธาน (แทน) นายไชยา เงินท้วม ผู้แทนหมู่ 6 ตำบลมาบยางพร (อดีตประธานคณะกรรมการ) ทำหน้าที่แทนประธาน แจ้งคณะกรรมกาตรวจสอบรับรองรายงานการประชุมครั้งที่ 1/2568 ณ ห้องประชุม ชั้น 2 อาคารสำนักงานโครงการ บริษัท อมตะ บี.กริม เพาเวอร์ (ระยอง) 4 จำกัด โดยฝ่ายเลขานุการฯ ได้จัดทำรายงานการประชุม รายละเอียดตามเอกสารประกอบการประชุม หากคณะกรรมการท่านใดประสงค์แก้ไข สามารถแจ้งความประสงค์ เพื่อให้ฝ่ายเลขานุการแก้ไขความถูกต้อง

มติที่ประชุม คณะกรรมการทุกท่านรับรองรายงานการประชุมฯ ครั้งที่ 1/2568

ระเบียบวาระที่ 3 **เรื่อง สืบเนื่อง/เพื่อทราบ**

วาระที่ 3.1 รายงานผลการปฏิบัติตามมาตรการป้องกันและแก้ไขผลกระทบสิ่งแวดล้อม และมาตรการติดตามตรวจสอบผลกระทบสิ่งแวดล้อมของโครงการฯ ประจำปี 2568 ระหว่างเดือนมกราคม – มิถุนายน 2568

ผู้แทนโรงไฟฟ้าฯ นางสาวธัญญลักษณ์ ภู่พูลเพียน เจ้าหน้าที่ด้านสิ่งแวดล้อมและความปลอดภัยของโครงการฯ รายงานผลการปฏิบัติตามมาตรการป้องกันและแก้ไขผลกระทบสิ่งแวดล้อม และมาตรการติดตามตรวจสอบผลกระทบสิ่งแวดล้อมของโครงการฯ ประจำปี 2568 โดยพบว่าโครงการปฏิบัติตามมาตรการฯ ครบถ้วนทั้ง 12 มาตรการ ได้แก่

1. มาตรการทั่วไป
2. ด้านคุณภาพอากาศ
3. ด้านเสียง
4. ด้านคุณภาพน้ำ
5. การคมนาคม
6. ด้านกากของเสีย
7. ด้านการระบายน้ำและควบคุมน้ำท่วม
8. ด้านเศรษฐกิจ-สังคม
9. ด้านการมีส่วนร่วมและมวลชนสัมพันธ์
10. ด้านสาธารณสุข/อาชีวอนามัยและความปลอดภัย
11. ด้านการเกิดอันตรายร้ายแรงและเหตุฉุกเฉิน
12. สุนทรียภาพ (รายละเอียดตามที่เสนอต่อที่ประชุม)

มติที่ประชุม รับทราบการผลการดำเนินงานของโครงการฯ ตามที่เสนอ

/..วาระที่

วาระที่ 3.2 กิจกรรมการลงพื้นที่ของโครงการฯ และการมีส่วนร่วมกับชุมชน ระหว่างเดือนมกราคม – มิถุนายน 2568

ผู้แทนโรงไฟฟ้าฯ นางสาวเปรมกมล กร่างสละ เจ้าหน้าที่ฝ่ายธุรกิจเพื่อสังคม โครงการฯ แจ้งผลการดำเนินกิจกรรมมวลชนสัมพันธ์ในพื้นที่ โดยแบ่งออกเป็น 7 ด้าน ได้แก่

1. ด้านชีวิตและความเป็นอยู่
2. ด้านการศึกษา
3. ด้านวัฒนธรรม
4. ด้านศาสนา
5. ด้านสิ่งแวดล้อม
6. ด้านกีฬา
7. ด้านชุมชนสัมพันธ์

ด้านชีวิตและความเป็นอยู่

- วันที่ 13 กุมภาพันธ์ 2568 พนักงาน กลุ่มโรงไฟฟ้าอมตะ บี.กริม เพาเวอร์ (ระยอง) เข้าร่วมกิจกรรมบริจาคโลหิต “100 ล้านซีซี โลหิตชาวอมตะเพื่อสภากาชาดไทย” ครั้งที่ 41 กับเหล่ากาชาดจังหวัดระยอง ณ จุดรับบริจาคโลหิตนิคมอุตสาหกรรมอมตะซิตี้
- วันที่ 16 พฤษภาคม 2568 สนับสนุนหมวกกันน็อคในโครงการ "รณรงค์การสวมหมวกนิรภัย สร้างวินัยจราจร" ณ ศูนย์พัฒนาเด็กเล็ก ตำบลเขาไม้แก้ว อำเภอบางละมุง จังหวัดชลบุรี

ด้านการศึกษา

- วันที่ 10 - 11 มกราคม 2568 เข้าร่วมกิจกรรมสนับสนุนของรางวัลและทุนการศึกษา เนื่องในวันเด็กแห่งชาติ ประจำปี ของชุมชนโดยรอบพื้นที่โรงไฟฟ้าฯ ได้แก่ นิคมอุตสาหกรรมอมตะ ซิตี้ ระยอง โรงเรียนบ้านมาบยางพร ต.มาบยางพร โรงเรียนบ้านห้วยปราบ ต.มาบยางพร องค์การบริหารส่วนตำบลพนานิคม โรงเรียนนิคมสร้างตนเอง จ.ระยอง 9 ต.พนานิคม โรงเรียนบ้านห้วยไข่เน่า ต.เขาไม้แก้ว และองค์การบริหารส่วนตำบลปลวกแดง
- วันที่ 21 มกราคม 2568 มอบเครื่องมือวิทยาศาสตร์สำหรับใช้ในงานวิเคราะห์คุณภาพตัวอย่างแก่มหาวิทยาลัยบูรพา จำนวน 4 รายการ ดังนี้ 1.เครื่องทำสุญญากาศโดยใช้แรงดันน้ำ (Aspirator) 2.เครื่องวัดปริมาณน้ำและไขมันในน้ำ (Oil Content Analyzer) 3.เครื่องกวนสารให้ความร้อนแบบอนาล็อก (Analog heating plate) 4.อ่างควบคุมอุณหภูมิ (Water bath)

/..วันที่ 3

- วันที่ 3 กุมภาพันธ์ 2568 เข้าร่วมเปิดบ้านวิชาการ (OPEN HOUSE) อนุบาลตันตรารักษ์ ประจำปี 2568 เป็นกิจกรรมที่สามารถนำไปประยุกต์ใช้ใน " โครงการบ้านวิทยาศาสตร์น้อย ประเทศไทย " ซึ่งครูของโรงเรียนเป็นวิทยากรเครือข่ายท้องถิ่น (Local Trainer)

- วันที่ 18 - 21 มีนาคม 2568 กลุ่มโรงไฟฟ้า อมตะ บี.กริม เพาเวอร์ และ บี.กริม บีไอพี เพาเวอร์ เข้าร่วมโครงการบ้านนักวิทยาศาสตร์น้อย ประเทศไทย ปีงบประมาณ 2568 เพื่อเตรียมพร้อมการจัดการแผนการสอน แก่คุณครูระดับปฐมวัย และประถมศึกษา โครงการบ้านนักวิทยาศาสตร์น้อย บี.กริม ทั้ง 3 เครือข่าย ได้แก่ เครือข่าย บี.กริม ชลบุรี เครือข่าย บี.กริม ระยอง และเครือข่าย บี.กริม บีไอพี

ด้านวัฒนธรรม

- วันที่ 13 - 16 เมษายน 2568 เข้าร่วมสนับสนุนกิจกรรม " วันสงกรานต์ ประจำปี 2568 " กับชุมชนในพื้นที่ใกล้เคียงโดยรอบโรงไฟฟ้า โดยมีการสรงน้ำพระ รดน้ำดำหัวผู้สูงอายุ

ด้านสิ่งแวดล้อม

- วันที่ 12 มิถุนายน 2568 เข้าร่วมโครงการ "ปลูกป่าเฉลิมพระเกียรติ สมเด็จพระนางเจ้าสุทิดา พัชรสุธาพิมลลักษณ พระบรมราชินี" เนื่องในวโรกาสวันเฉลิมพระชนมพรรษา

ด้านชุมชนสัมพันธ์

- เดือนมกราคม 2568 คณะผู้บริหารและตัวแทนโรงไฟฟ้าฯ มอบกระเช้าอวยพรปีใหม่ผู้บริหารท้องถิ่น ผู้นำชุมชนรอบโรงไฟฟ้า และหน่วยงานราชการ
- วันที่ 5 มิถุนายน 2568 บริจาคเครื่องคอมพิวเตอร์โน๊ตบุ้คจำนวน 5 เครื่องให้แก่สถานีตำรวจภูธรปลวกแดง จังหวัดระยอง โดยมีวัตถุประสงค์เพื่อสนับสนุนการดำเนินงานของหน่วยงานภายนอก และเพื่อเป็นการส่งเสริมการทำงานร่วมกันในด้านการพัฒนาเทคโนโลยีสารสนเทศให้มีประสิทธิภาพในการทำงานมากยิ่งขึ้น
- วันที่ 10 มิถุนายน 2568 ลงพื้นที่พบผู้นำชุมชนรอบโรงไฟฟ้า โดยพบ คุณไพศาล อู่เจริญ นายกองค์การบริหารส่วนตำบลพนานิคมและคุณไชยา เงินท้วม อดีตผู้ใหญ่บ้านหมู่ที่ 6 ตำบลมาบยางพร จังหวัดระยอง เพื่อร่วมปรึกษาหารือแลกเปลี่ยนความคิดเห็นสร้างความสัมพันธ์ที่ดี

มติที่ประชุม รับทราบการผลการดำเนินงานของโครงการฯ ตามที่เสนอ

/..วาระที่

วาระที่ 3.3 รายงานการนำส่งเงินสมทบกองทุนพัฒนาไฟฟ้า จังหวัดระยอง

ผู้แทนโรงไฟฟ้าฯ นางสาวเปรมกมล กร่างสละ เจ้าหน้าที่ฝ่ายธุรกิจเพื่อสังคมโครงการฯ รายงานการนำส่งเงินสมทบเข้ากองทุนพัฒนาไฟฟ้า จังหวัดระยอง ประจำปี 2568 (ม.ค. - พ.ค.) (ตามมาตรการ 97(3))

บริษัท	นำส่งเงินสมทบ (บาท)
อมตะ บี.กริม เพาเวอร์ (ระยอง) 1 จำกัด	3,502,013.31
อมตะ บี.กริม เพาเวอร์ (ระยอง) 2 จำกัด	3,498,240.98
อมตะ บี.กริม เพาเวอร์ (ระยอง) 3 จำกัด	2,901,421.52
อมตะ บี.กริม เพาเวอร์ (ระยอง) 4 จำกัด	2,901,421.52
อมตะ บี.กริม เพาเวอร์ (ระยอง) 5 จำกัด	2,902,820.63
รวมเงินนำส่ง ช่วงดำเนินการ เดือนมกราคม-พฤษภาคม 2568	**16,231,363.93**

ผู้แทนกองทุน คุณพร้อมพงษ์ วงศ์มณีนิล ผู้อำนวยการสำนักงานกำกับกิจกรรมพลังงานเขต 8 ให้ความรู้และความเข้าใจเรื่องรายงานการนำส่งเงินสมทบเข้ากองทุนพัฒนาไฟฟ้า จังหวัดระยอง ประจำปี 2568 กับคณะกรรมและผู้เข้าร่วมประชุม

มติที่ประชุม รับทราบการผลการดำเนินงานของโครงการฯ ตามที่เสนอ

ระเบียบวาระที่ 4 **เรื่องเพื่อพิจารณา**

มติที่ประชุม ไม่มีเรื่องพิจารณา

ปิดประชุมเวลา **12.00 น.**

....

นางสาวเบญจวรรณ รังสน
ผู้บันทึกรายงานการประชุม

นางสาวกิ่งเพชร ชัยเสริม
(แทน) ประธานคณะกรรมการ
ผู้รับรองรายงานการประชุม

ภาคผนวก ข.52

แผนผังพื้นที่สีเขียวของโครงการ

มิติกายภาพ : 1. การจัดการพื้นที่สีเขียว

ABPR 5 พื้นที่ทั้งหมดของโรงงาน 28.62 ไร่ 11,448 ตร.วา 45,792 ตร.ม พื้นที่สีเขียว คิดเป็น 5 % ของพื้นที่โครงการ

พื้นที่สีเขียว คิดเป็น 5 % ของพื้นที่โครงการ เป็นไปตามมาตรการการป้องกันและแก้ไขผลกระทบสิ่งแวดล้อม และมาตรการติดตามตรวจสอบผลกระทบสิ่งแวดล้อม (Environmental Impact Assessment ; EIA)

มิติกายภาพ : 1. การจัดการพื้นที่สีเขียว

พื้นที่สีเขียว

มิติกายภาพ : 1. การจัดการพื้นที่สีเขียว

การดูแลพื้นที่สีเขียว

พื้นที่สีเขียวภายในโรงไฟฟ้า ABPR5

บริษัทฯ ทำสัญญาจ้างคนสวน-สายกวาด (ทำหน้าที่ร่วมกันในการดูแล ปรับปรุงพื้นที่สีเขียว) จำนวน 2 คน

- ปฏิบัติงาน วันจันทร์ - วันเสาร์ เวลา 7.00 น. - 17:00 น.
- ตัดหญ้า ถอนวัชพืช 2 ครั้ง /เดือน
- ใส่ปุ๋ย 1 ครั้ง /เดือน
- รดน้ำทุกวัน ยกเว้นวันที่มีฝนตก

ภาคผนวก ข.53

เอกสารการจ้างเจ้าหน้าที่ดูแลพื้นที่สีเขียวของโครงการ

ข้อ 4 สิทธิและหน้าที่ของผู้ว่าจ้าง

4.1 ผู้ว่าจ้างมีสิทธิ์ให้ผู้รับจ้างสลับสับเปลี่ยนพนักงานของผู้รับจ้างผู้หนึ่งผู้ใด หากพบว่า พนักงานของผู้รับจ้างผู้นั้นมีความประพฤติที่ไม่เหมาะสมที่จะปฏิบัติหน้าที่ต่อไปได้ โดยผู้รับจ้างจะต้องดำเนินการเปลี่ยนพนักงานของผู้รับจ้างคนใหม่ภายใน 1 วัน (หนึ่ง) วัน โดยไม่มีข้อโต้แย้งคัดค้านทั้งสิ้น

4.2 ในกรณีที่ไม่มีน้ำรดต้นไม้ ผู้ว่าจ้างประสงค์ให้ผู้รับจ้างใช้รถบรรทุกน้ำมารดน้ำต้นไม้เพิ่มเติม ผู้ว่าจ้างจะแจ้งให้ผู้รับจ้างทราบล่วงหน้าอย่างน้อย 1 (หนึ่ง) วัน โดยคิดค่ารถบรรทุกน้ำ ขนาด 6,000-7,000 ลิตร ในราคาเที่ยวละ 1,000 บาท

4.3 ในระหว่างที่สัญญาฉบับนี้ยังมีผลใช้บังคับ หากผู้ว่าจ้างประสงค์ให้มีการเปลี่ยนแปลงแก้ไขเพิ่มเติมรายละเอียด หรือขอบเขตของงานที่จ้าง ผู้ว่าจ้างจะต้องจัดทำหนังสือแจ้งให้ผู้รับจ้างทราบถึงความประสงค์ในการเปลี่ยนแปลงดังกล่าว และผู้รับจ้างรับที่จะรีบดำเนินการตามที่ผู้ว่าจ้างเสนอ ภายใน 5 (ห้า) วัน นับแต่วันที่ได้รับแจ้งจากผู้ว่าจ้าง

4.4 ผู้ว่าจ้างมีสิทธิ์สอดส่องและตรวจดูการปฏิบัติงานที่จ้างของผู้รับจ้างในเวลาใดๆ โดยไม่ต้องแจ้งให้ทราบล่วงหน้า โดยผู้ว่าจ้างอาจจะแต่งตั้งหรือมอบหมายให้พนักงานหรือบุคคลอื่นใดเป็นผู้ดำเนินการแทนผู้ว่าจ้างก็ได้

4.5 ผู้ว่าจ้างตกลงให้ผู้ว่าจ้างมีสิทธิประเมินผลการปฏิบัติงานที่จ้างของผู้รับจ้างตามมาตรฐานของผู้ว่าจ้าง และหากผลการปฏิบัติงานของผู้ว่าจ้างไม่ผ่านเกณฑ์มาตรฐานที่ผู้ว่าจ้างกำหนดไว้ ผู้รับจ้างตกลงให้ผู้ว่าจ้างปรับผู้รับจ้างเป็นจำนวนไม่เกิน 1,000 บาท (หนึ่งพันบาทถ้วน) ต่อครั้งหรือบอกเลิกสัญญาฉบับนี้ได้

4.6 ผู้ว่าจ้างมีสิทธิ์ที่จะดำเนินการตรวจสอบร่างกาย สัมภาระ และรถยนต์ของผู้รับจ้างที่นำเข้ามาปฏิบัติงานในพื้นที่ของผู้ว่าจ้างและก่อนออกจากพื้นที่ของผู้ว่าจ้างได้

ข้อ 5 สิทธิและหน้าที่ของผู้รับจ้าง

5.1 ผู้รับจ้างตกลงจะจัดหาพนักงานของผู้รับจ้าง จำนวน 1 คน เพื่อปฏิบัติงานที่จ้างให้แก่ผู้ว่าจ้าง

5.2 ผู้รับจ้างทำงานทุกวันจันทร์ – วันเสาร์ ตั้งแต่เวลา 8.00 – 17.00 น. หยุดทุกวันอาทิตย์ และวันหยุดตามปฏิทินของบริษัทผู้ว่าจ้าง

5.3 ผู้รับจ้างตกลงจะปฏิบัติงานที่จ้างและ/หรือผู้ควบคุมให้พนักงานของผู้รับจ้างปฏิบัติงานที่จ้าง เพื่อบำรุงรักษาและดูแลสวนและต้นไม้ในบริเวณโรงงานให้อยู่ในสภาพที่สวยงามเสมอ โดยปรากฏรายละเอียดงานที่จ้างดังต่อไปนี้

5.3.1 ตัดหญ้าสนามภายในพื้นที่โรงไฟฟ้าในส่วนที่รับผิดชอบ พร้อมเก็บเศษ

5.3.2 ตัดหญ้าและดูแลต้นไม้ ในพื้นที่โรงไฟฟ้าในส่วนที่รับผิดชอบทั้งหมด

5.3.3 ตัดแต่งไม้ยืนต้น ไม้พุ่ม

5.3.4 พรวนดิน รดน้ำ

5.3.5 กำจัดวัชพืช

5.3.6 ใส่ปุ๋ย ฉีดยากันเชื้อรา และป้องกันศัตรูพืช

5.4 ผู้รับจ้างต้องจัดหารถยนต์ น้ำมันเชื้อเพลิง อุปกรณ์ หรือเครื่องมือในการปฏิบัติงานที่จ้าง รวมถึงเครื่องแต่งกายสำหรับพนักงาน ให้มีปริมาณเพียงพอต่อการปฏิบัติงานของพนักงานของผู้รับจ้างทุกคน

5.5 ในกรณีที่มีความจำเป็นเร่งด่วน ผู้รับจ้างสามารถปฏิบัติงานตามความต้องการของผู้ว่าจ้างได้ โดยไม่มีการเรียกเก็บค่าใช้จ่ายเพิ่มเติมจากผู้ว่าจ้าง

5.6 ผู้รับจ้างต้องแก้ไขความผิดพลาด บกพร่อง ละเลย หรือปฏิบัติให้ถูกต้องตามที่สัญญากำหนดให้แล้วเสร็จภายในกำหนดระยะเวลา 7 (เจ็ด) วัน นับแต่วันที่ได้รับแจ้งจากผู้ว่าจ้าง

5.7 กรณีต้นไม้ตายหรือเสียหายจากการผิดพลาด บกพร่อง ละเลย ของผู้รับจ้าง ขอให้หาต้นไม้มาปลูกทดแทน ภายใน 30 วัน

5.8 ในกรณีที่จำเป็นต้องใช้เครื่องมือหนักในการปฏิบัติงานเพื่อความปลอดภัย ในการทำงาน เช่น รถตัก , รถกระเช้าในการตัดกิ่งต้นไม้ใหญ่ ทางผู้รับจ้าง ไม่ขอคิดค่าใช้จ่ายเพิ่มเติมจากงานที่เกิดขึ้นจริง

5.9 ในกรณีที่ต้นไม้ตายหรือเสียหายจากภัยธรรมชาติ สารเคมี หรือสิ่งอื่นใดที่ไม่ได้เกิดจากความผิดพลาดของผู้รับจ้าง ถ้าผู้ว่าจ้างต้องการให้เปลี่ยนหรือซ่อมแซม ผู้รับจ้างไม่ขอคิดค่าใช้จ่ายตามจำนวนที่ใช้จริง

5.10 พนักงานของผู้รับจ้างจะปฏิบัติงานเฉพาะในส่วนที่ระบุในสัญญาเท่านั้น หากผู้ว่าจ้างจะนำพนักงานของผู้รับจ้างไปปฏิบัติงานนอกเหนือจากที่ระบุในสัญญา ต้องแจ้งให้ผู้รับจ้างทราบและอนุญาตก่อนทุกครั้ง

5.11 หากพนักงานของผู้รับจ้างได้ลักทรัพย์หรือยักยอกทรัพย์สินใดๆของผู้ว่าจ้างไม่ว่าจะเป็นสินค้าและหรือชิ้นส่วนวัสดุ และหรือเศษต่างๆ ของชิ้นส่วนวัสดุของผู้ว่าจ้าง ผู้รับจ้างตกลงชดใช้ค่าเสียหายจากการลักทรัพย์หรือการยักยอกทรัพย์สินใดๆ ที่พนักงานของผู้รับจ้างเป็นผู้กระทำ และหรือมีเหตุอันควรเชื่อได้ว่าพนักงานของผู้รับจ้างได้กระทำกับผู้ว่าจ้างเป็นจำนวน 5 (ห้า) เท่า ของมูลค่าทรัพย์สินที่ได้ลักทรัพย์หรือยักยอกทรัพย์นั้นๆ ไป โดยผู้รับจ้างตกลงให้ผู้ว่าจ้างหักจากค่าบริการที่ผู้ว่าจ้างจะต้องจ่ายให้กับผู้รับจ้าง หากค่าบริการที่ผู้ว่าจ้างจะต้องจ่ายให้กับผู้รับจ้างไม่เพียงพอต่อการหักเพื่อชดใช้ค่าเสียหายที่เกิดขึ้น ผู้รับจ้างยินยอมชดใช้ส่วนต่างนั้นให้จนครบจำนวน

ทั้งนี้ ผู้รับจ้างตกลงที่จะนำเงินส่วนที่ขาดดังกล่าวนั้นมาชำระให้กับผู้ว่าจ้างภายใน 7 (เจ็ด) วัน นับแต่วันที่ผู้ว่าจ้างได้แจ้งให้ทราบว่าค่าบริการที่ผู้ว่าจ้างได้หักไว้นั้น ไม่เพียงพอกับค่าเสียหายที่เกิดขึ้น

ข้อ 6 การโอนงาน

ผู้รับจ้างต้องไม่ให้ช่วงงาน โอนงาน หรือละทิ้งงานให้แก่ผู้อื่นเป็นผู้ทำงานตามสัญญาฉบับนี้แทน ไม่ว่าทั้งหมดหรือแต่เพียงบางส่วนด้วยประการใดๆ โดยไม่ได้รับความยินยอมจากผู้ว่าจ้างก่อน และแม้จะได้รับความยินยอมดังกล่าว ผู้รับจ้างก็ยังต้องรับผิดชอบอย่างเต็มที่ตามสัญญาฉบับนี้ต่อไปทุกประการ รวมทั้งรับผิดชอบในความผิดไม่ว่าจะโดยจงใจหรือประมาทเลินเล่อของผู้รับจ้างช่วง ผู้รับโอนงานของผู้รับจ้าง หรือตัวแทนหรือลูกจ้างของบุคคลดังกล่าวนั้นทุกประการด้วย

ห้ามมิให้ผู้รับจ้างโอนสิทธิประโยชน์ตามสัญญานี้ให้แก่ผู้อื่นโดยไม่ได้รับความยินยอมจากผู้ว่าจ้างก่อน

ข้อ 7 ความสัมพันธ์ของคู่สัญญา

คู่สัญญาทั้งสองฝ่ายรับทราบและเข้าใจดีว่า การว่าจ้างทำงานตามสัญญาฉบับนี้เป็นการจ้างทำของคู่สัญญาไม่มีนิติสัมพันธ์ต่อกันในลักษณะที่เป็นการจ้างแรงงาน หุ้นส่วน หรือตัวแทนนายหน้ากันแต่อย่างใด

ข้อ 8 การผิดนัดผิดสัญญา และการสิ้นสุดของสัญญา

8.1 ในกรณีที่คู่สัญญาฝ่ายใดฝ่ายหนึ่งผิดนัดหรือผิดสัญญาข้อหนึ่งข้อใดให้คู่สัญญาอีกฝ่ายหนึ่งมีสิทธิ์บอกเลิกสัญญาและเรียกค่าเสียหายได้

ในกรณีที่ผู้รับจ้างผิดนัดหรือผิดสัญญา เป็นเหตุให้ผู้ว่าจ้างได้รับความเสียหาย ผู้รับจ้างตกลงที่จะรับผิดและชำระค่าเสียหายตามความเสียหายที่เกิดขึ้นจริงให้กับผู้ว่าจ้าง ภายใน 7 (เจ็ด) วัน นับแต่วันที่ผู้ว่าจ้างได้แจ้งให้ทราบถึงความเสียหายที่เกิดขึ้น

8.2 หากผลการปฏิบัติงานหรือคุณภาพของงานที่จ้างไม่เป็นไปตามมาตรฐานของผู้ว่าจ้างผู้ว่าจ้างมีสิทธิ์บอกเลิกสัญญาก่อนครบกำหนดตามสัญญาได้ โดยแจ้งเป็นหนังสือให้ผู้รับจ้างทราบล่วงหน้า ไม่น้อยกว่า 30 (สามสิบ) วัน

ข้อ 9 ข้อตกลงอื่นๆ

9.1 การผ่อนผัน ผ่อนเวลาหรือละเว้นการใช้สิทธิใดๆ ที่ผู้ว่าจ้างมีอยู่กับผู้รับจ้างตามสัญญาฉบับนี้ ไม่ถือว่าผู้ว่าจ้างได้สละสิทธิประโยชน์ใดๆที่มีอยู่กับผู้รับจ้างตามสัญญาฉบับนี้แต่อย่างใด

9.2 ในกรณีที่คู่สัญญามีสิทธิ์คิดดอกเบี้ยต่อกัน ทั้งสองฝ่ายตกลงให้ใช้อัตราร้อยละ 15 ต่อปี นับแต่วันผิดนัด

9.3 การบอกกล่าว ทวงถามหรือส่งเอกสารใดๆ อันพึงมีแก่คู่สัญญาอีกฝ่ายหนึ่งตามภูมิลำเนาที่ปรากฏในสัญญานี้ ให้ถือว่าเป็นการส่งโดยชอบ และอีกฝ่ายหนึ่งได้ทราบแล้วนับแต่วันที่คำบอกกล่าว หรือเอกสารนั้นพึงไปถึงตามปกติ

9.4 ถ้าสัญญาหรือข้อตกลงใดที่มีอยู่ก่อนข้อตกลงนี้ ไม่ว่าจะโดยวาจา หรือเป็นลายลักษณ์อักษรคู่สัญญาตกลงให้ใช้ข้อตกลงในสัญญาฉบับนี้แทนทั้งสิ้น

9.5 การเพิ่มเติม ตัดทอน แก้ไข หรือเปลี่ยนแปลงสัญญาฉบับนี้ จะมีผลใช้บังคับได้ต่อเมื่อคู่สัญญาทั้งสองฝ่ายได้ตกลงและลงนามร่วมกันเป็นลายลักษณ์อักษร

สัญญาฉบับนี้ทำขึ้นเป็นสองฉบับมีข้อความถูกต้องตรงกัน ทั้งสองฝ่ายได้ทราบและเข้าใจข้อความโดยละเอียดตลอดแล้ว เห็นว่าถูกต้องตรงตามเจตนาของตน จึงได้ลงลายมือชื่อ และประทับตราบริษัท (ถ้ามี) ไว้เป็นสำคัญต่อหน้าพยานและต่างยึดถือไว้ฝ่ายละหนึ่งฉบับ

(ลงชื่อ).....[redacted]ข้าง

(คุณสา[redacted])

(ลงชื่อ[redacted]ผู้รับจ้าง

([redacted])

(ลงชื่อ)..[redacted]พยาน

([redacted])

(ลงชื่อ)[redacted]พยาน

([redacted])

HAEIO LANDSCAPE (THAILAND) CO.,LTD.